Advant Controller 31-S

Distributed Safety Control System with AC31 Safety Fieldbus

Safe intelligence at a local level

Achieving safety for man, machine and the environment - at low cost and efficiently

Nowadays, machine and plant manufacturers are confronted by ever more extensive and ever more stringent safety conditions, in line with the demand that the safety of machines and systems must be implemented optimally and in line with the “state of the art” for protection of man, machine and the environment.

Thus, machine and plant manufacturers are required to comply with these more stringent safety requirements on one hand but they are constantly under cost pressure to offer their products at less and less cost and, nevertheless, as more convenient products on the other. This means more and more functionality with less and less expenditure, both in engineering and in hardware. The safety-orientated, distributed Advant® Controller 31-S automation system fully meets these requirements.

Advant Controller 31-S for use in environmental engineering and mechanical engineering

Safety-orientated, distributed intelligence

The Advant Controller 31-S allows small, distributed control units to be designed and standardised. They operate autonomously at a local level where the safety function is required. The relevant, related inputs and outputs are installed in the field where the signal is detected or output. They are connected to their central unit via the AC31 Safety Fieldbus. This helps, once again, to save on cables. These control units can be networked flexibly and can exchange data among each other or with a higher-level system.

Low-cost

The Advant Controller 31-S requires no redundant central unit for safety functions, so this system is low-cost both as regards hardware and as regards engineering. The I/O units at a local level already feature an internal 2-channel structure and monitor themselves, including passive error and fault detection.

One set of hardware for all functions

The hardware of the Advant Controller 31-S supports the safety functions and operating functions simultaneously, i.e. one set of hardware for all functions and the associated advantage of cost reduction with simultaneously enhanced functionality.

Fields of application

The Advant Controller 31-S is a safety controller, suitable for installations and machines in various applications. Typical applications are:

- ✔ Burner and Boiler control
- ✔ Firing systems, installations using gas
- ✔ Storage and materials handling, mixing systems
- ✔ Mechanical engineering and machine construction, such as printing presses and packaging machines
- ✔ Construction and container cranes
- ✔ Plant construction, environmental engineering
- ✔ Road traffic signal installations, tunnel construction
- ✔ Process interlocks and protection

Vertical integration

The Advant Controller 31-S is also open to higher-level controllers and networks. It can be integrated via the Advant field bus as a decentralised, safety-orientated system in Advant OCS networks. Other standard interfaces include ARCNET, PDnet, MODBUS, Profibus, RCOM for data teletransmission or an open ASCII protocol. Other protocols on request.

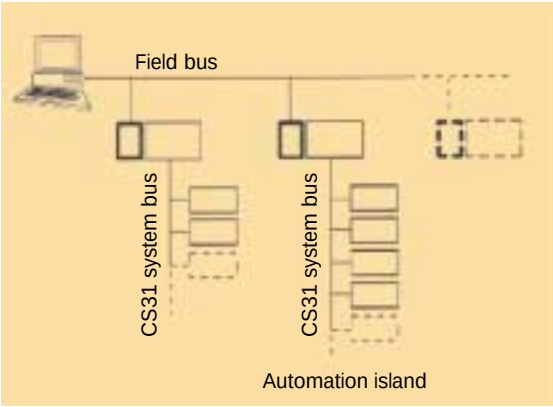

Feature	Advantages	Saving
Cabling, switching system:	No need for plug connectors susceptible to faults No need for logic contactors Simplified cabling thanks to bus technology	80%
Maintenance:	Simplified thanks to wear-free logic circuit Diagnostic functions	40%
Flexibility:	Easy expansion and exchange of functions, thus achieving a market advantage thanks to type diversity	Greater sales
Functionality:	Convenience functions thanks to software modules	80%
Programming system concept:	Simplification thanks to modularisation Different plant or machine types thanks to exchange of software and hardware modules	40%

Safety engineering

- Flexible and demand-compliant

Requirement classes, categories, safety classes

- Risk analysis

Programming

- Manageable and effortless

System data

Advant Controller 31-S

- Distributed safety engineering in the Advant network

Safety engineering -
Flexible and demand-compliant

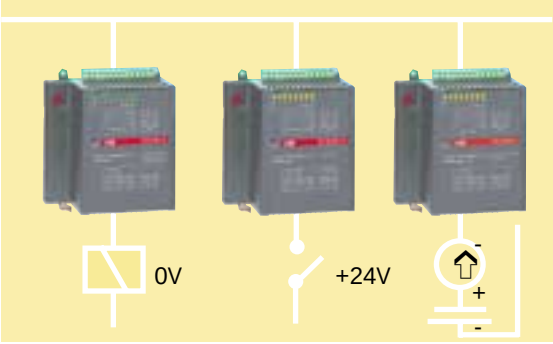

Safety modules

3 different units for reading and issuing safety-orientated signals (binary input and output, analog input).
Specially for internally redundant units that are certified for safety-related applications allowing the recognition of internal and external defects such as short-circuits, breaks in circuits, and signal level, with passive fault-recognition. The modules can be connected directly to the AC31 safety field bus via an integral bus coupler.

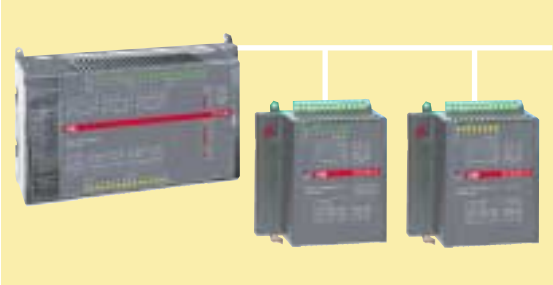

AC31 safety field bus

The cyclical transfer of safety data via the AC31 safety field bus is ensured by a safety-date format and CRC8. A bus time-out of 100 ms, which is monitored at the central control unit and on the I/O units, ensures the safety-orientated switch-off of the I/A modules in the event of any communication malfunctions.

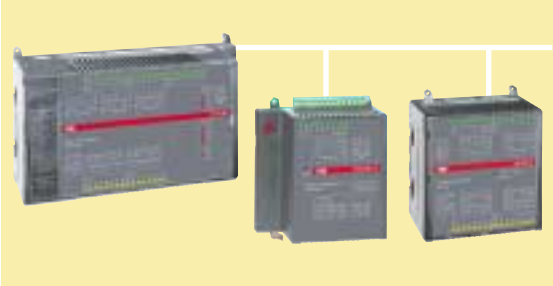

Decentralized mixing

One controller for operating and safety functions. The safety modules and the input/output units for process signals are mixed and connected to the AC31 safety field bus, directly at the point where the signals are detected or issued. The structure also makes the Advant Controller 31-S flexible when a modification or an enlargement is necessary.

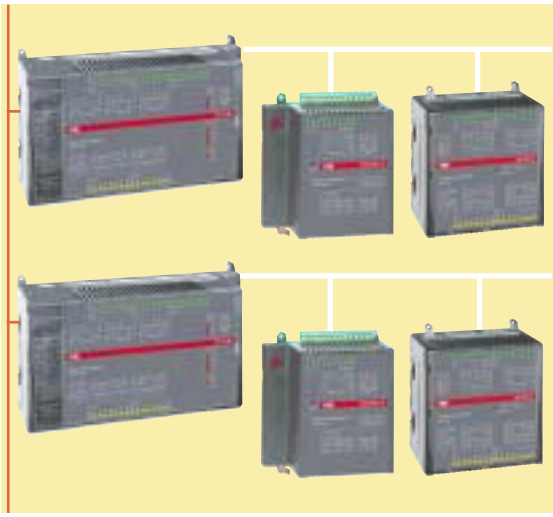

Clearly structured

In the case of large installations and machines, the Advant Controller 31-S provides clear, manageable hardware and software structures. Each controller performs its safety and processing functions independently as the master; this increases availability and improves safety. Higher-level networking ensures the rapid exchange of data between the central unit and the higher-level system.

Reliable processing

The central unit processes the data supplied by the I/O using safety-orientated functional modules. These carry out internal computing operations with additional self-test actions and plausibility considerations. If internal defects are recognized, they trigger off a break in communications and thus a safety-orientated switch-off of the I/O units. If there is an external malfunction such as a break in a circuit, an overload, or a short-circuit of an input channel, the safety-orientated automatic unit reacts after a maximum fault tolerance of 200 ms. The pattern of reaction to an external fault can be projected freely after discussion and agreement with the safety specialist.

Requirement classes, categories, safety classes - Risk analysis

The risk of an individual danger on a machine or installation can be determined using an interactive method (see EN 1050). A risk assessment must then be conducted for each single danger in order to estimate the danger potential. The risk graph of DIN V 19250 “Control and Instrumentation Systems. Fundamental Safety Considerations for Measurement and Control of Safety Equipment” resp. the risk assessment to EN 954-1 “Machine Safety” can be used as an aid to this.

The table below provides a comparison of the requirement classes of DIN V 19250, the categories of EN 954-1 and the safety integrity levels of IEC 61508.

Requirement class (DIN V 19250)	Category (EN 954-1)	Safety class (IEC 61508)
1	B	0
2	1-2	1
3	2-3	1
4	3	2
5	4	3
6		3
7		4
8		4

Pleas note that this comparison is for reference only, as classifications cannot be compared one to one.

AC31-S is certified according to numerous standards: (Please refer to the certification report for detailed information.)

- ✔ DIN V 19250: Fundamental Safety Considerations for Measurement and Control Safety Devices, requirement category (AK) 4
- ✔ EN 954: Machine Safety, Category 3
- ✔ EN 60204-1: Machine Safety – Electrical Equipment of Machines Part 1
- ✔ DIN VDE 0116: Electrical Equipment of Firing Systems. Requirements Applicable to Safety-Orientated Electronic Componts
- ✔ DIN EN 298: Automatic Burner Control Units for Gasburner and Gas Appliances with our without Fan
- ✔ NE 31: Plant Safety with Process Control Engineering Equipment, Class A1
- ✔ NFPA 8501: Standard for Single Burner Boiler Operation
- ✔ NFPA 8502: Standard for the Prevention of Furnace Explosions/Implosions in Multiple Burner Boilers

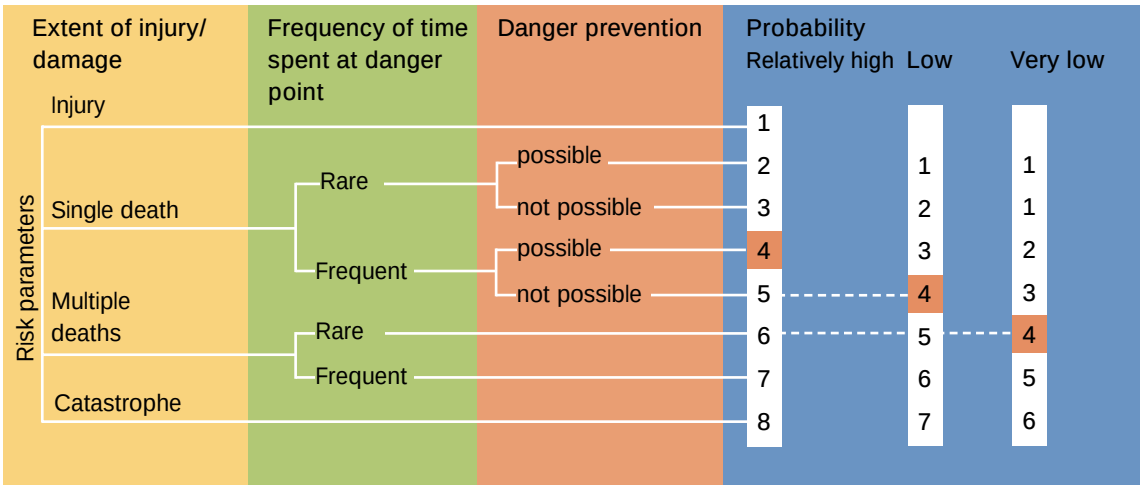

Risk graph, by analogy with DIN V 19250

Programming - Manageable and effortless

Standard function blocks

The operating and safety functions are programmed easily and conveniently in FBD. The standard software already contains an extensive, integrated library of complex function blocks. This library contains special safety blocks which have already been certified by the German Technical Inspection Authority (TÜV) for convenient and easy programming of your safety functions. The internal structure of these safety blocks meets the requirements as regards diversity and redundancy.

The user program is subdivided into a module for the safety functions and a module for the operating functions. This assists in achieving a clear program structure and simplifies testing. Each of these modules can be subdivided as required into part-programs. This as well serves to enhance clarity and standardisation.

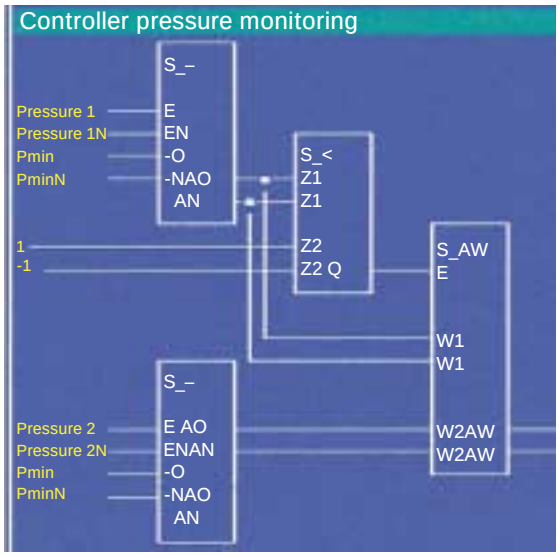

The program structure - the way to standardisation

Testing and commissioning, documentation

Extensive test functions and the option of online modification help to cut valuable commissioning time. The diagnostic information of the Advant Controller 31-S components can be accessed directly. Further-processing of this information helps to detect and eliminate faults and errors quickly. The program print-out, including extensive lists, such as variable lists, symbol lists and cross-reference lists, supports automatic documentation.

B	M	LOR name	LOR comment
		S_<=	Comparison Equal to or less than
		S_<>	Comparison Not equal to
		S_=	Assignment Binary
		S_=?	Comparison Equal to
		S_=W	Assignment Word
		S_>	Comparison Greater than
		S_>=	Comparison Equal to or Greater than
		S_ABORT	Abort
		INIT–SK	Initialisation Step chain
		S_ASV	OFF delay element
		S_AWT	Selection gate Word
		S_AWTB	Selection gate binary
		S_B/S	Conversion Binary -> S - F
		S_BEG	Limiter
		S_ESV	ON delay element
		S_I +	Positive edge
		S_I -	Negative edge
		S_LABO	Read S Output device BIN

Programming with safety function blocks

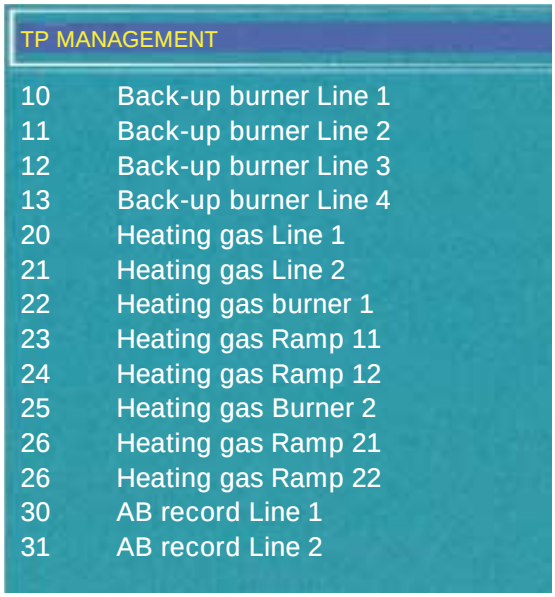

Segment plans for clear programming

Advant Controller 31-S - Decentralised safety engineering in the Advant network

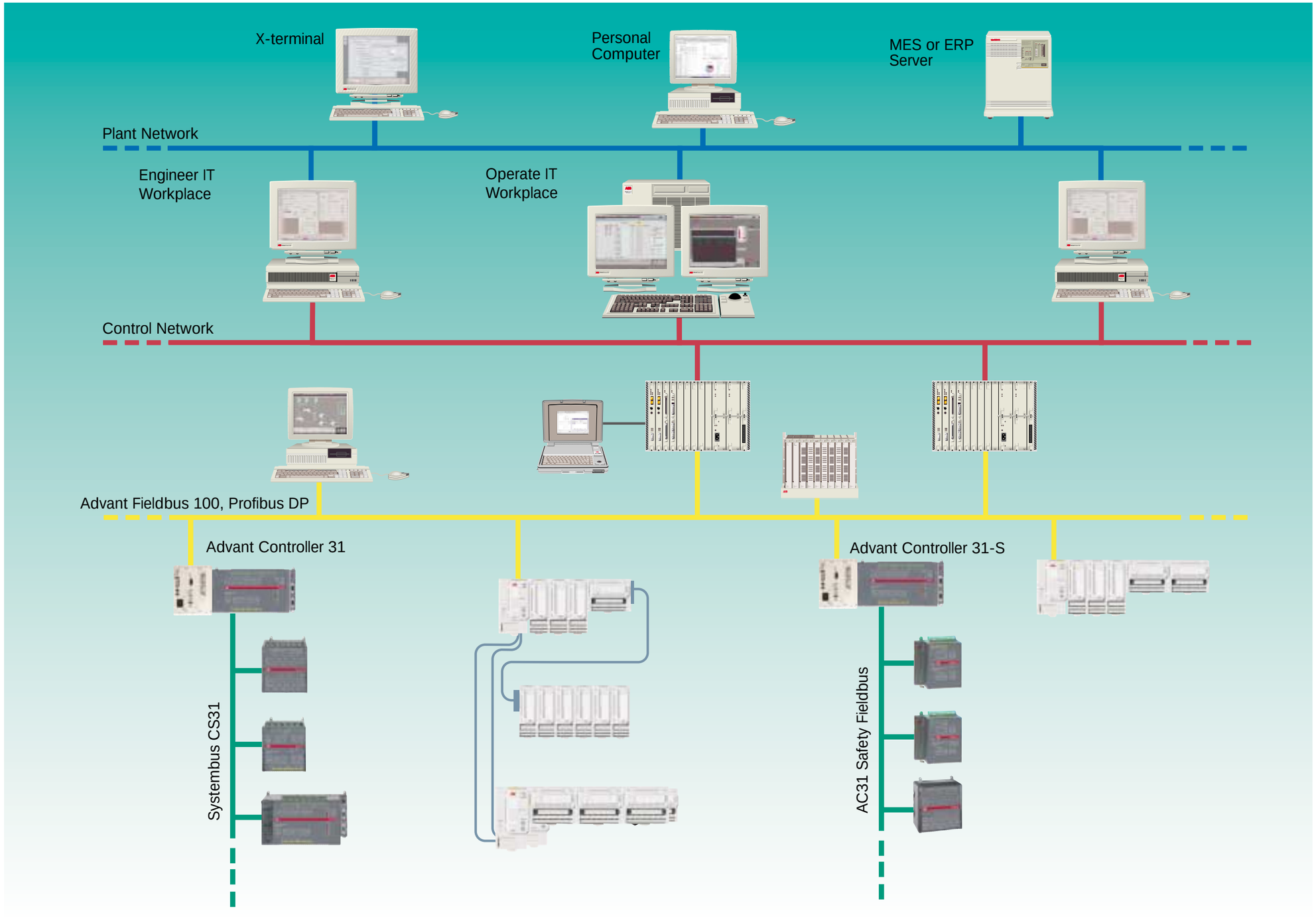

System data

Advant Controller 31-S system data

	07 KT 94-S	07 KT 93-S
Program memory (kByte)	480	56
Processing time (35% Word, 65% Bit)	0,2 ms	0,7 ms
Integrated digital I/O	24 / 16 / 8	24/16
Dezentralized digital I/O	max. 992	max. 992
Integrated analogue In	8 (±10 V, ±5 V, 0 ... 10 V, 0 ... 5 V, 0 ... 20 mA, 4 ... 20 mA, -50 °C ... +400 °C, -30 °C ... +70 °C oder als DI)	–
Integrated analogue Out	4 (±10 V, 0 ... 20 mA, 4 ... 20 mA oder als DO)	–
Dezentralized analogue I/O	max. 96 / 96	max. 96 / 96
MODBUS-Anschluss	2 x integrated	with coupler
ARCNET-Anschluss	integrated	integrated
Integrated Safety fieldbus	AC31 Safety Fieldbus	AC31 Safety Fieldbus
Smart Media Card	for saving User-program and -data	–
Step chains per 16 steps	128	128
Number of timers	freely selectable via Software	freely selectable via Software
Number of counters	freely selectable via Software	freely selectable via Software
Real-time clock	1	1
Supply voltage	24 V DC	24 V DC
System bus	RS 485 bus, 2-wire line (twisted, screened), max. 31 local modules, max. line length 500 m, cycle time for 31 modules with 8 digital inputs or outputs:12 ms	
Dimensions (W x H x D)	240 x 140 x 85 mm	
Mechanical construction	Modules in plastic housing, mounting on DIN rail 35 mm according to DIN EN 50 022 or with screws on mounting plate	
Diagnosis	Cycle monitoring, battery monitoring, detection of syntax errors, checksum monitoring	

07-DI 90-S Safe Input	
Number of digital inputs	8
Supply voltage	24 V DC
Electrical isolation with respect to system bus	yes
Dimensions (W x H x D)	120 x 140 x 85 mm
Modules per line	max. 8

07- DO 90-S Safe Output	
Number of digital outputs	8
Max. switching current of the transistor outputs	0.5 A, short-circuit resistant
Supply voltage	24 V DC
Electrical isolation with respect to system bus	yes
Dimensions (W x H x D)	120 x 140 x 85 mm
Modules per line	max. 16

07 AI 90-S Safe analogue inputs	
Number of analogue inputs	4
Measuring range	4 to 20 mA
Resolution	12-bit
Electrical isolation with respect to system bus	yes
Dimensions (W x H x D)	120 x 140 x 85 mm
Modules per line	max. 6

Programming and test software, supplement

- Safety-orientated function blocks
- Safety manual

... if you'd like to know more ..

... simply call us or send a fax. ABB staff in the regional offices will be pleased to help you.

And if you'd like to know even more, ABB offers various possibilities of adding to your knowledge and understanding of the software of decentralised automation. This includes a wide range of seminars and training sessions on special decentralised automation subjects. If you wish, we'd be pleased to provide you with training on your premises.

You can receive immediate answers to urgent questions on automation technology by calling our hotline. This hotline team consists of experts who design and program for our customers and who can therefore pass on to you their daily practical product and application experience. Apart from immediate assistance via telephone or modem, our hotline can also give you advice on applications

and programming as well as technical product information.

Druckschrift Nr. 1 SAC 103998 W0203 Printed in the Federal Republic of Germany (6/01 • 3 • DAD)

ABB STOTZ-KONTAKT GmbH
P.O. Box 10 16 80
D-69006 Heidelberg

Telephone ++49 62 21 / 7 01-0
Telefax ++49 62 21 / 7 01-11 15
http://www.abb.de/stotz-kontakt
e-mail: desst.info@de.abb.com