Scale: 1:4

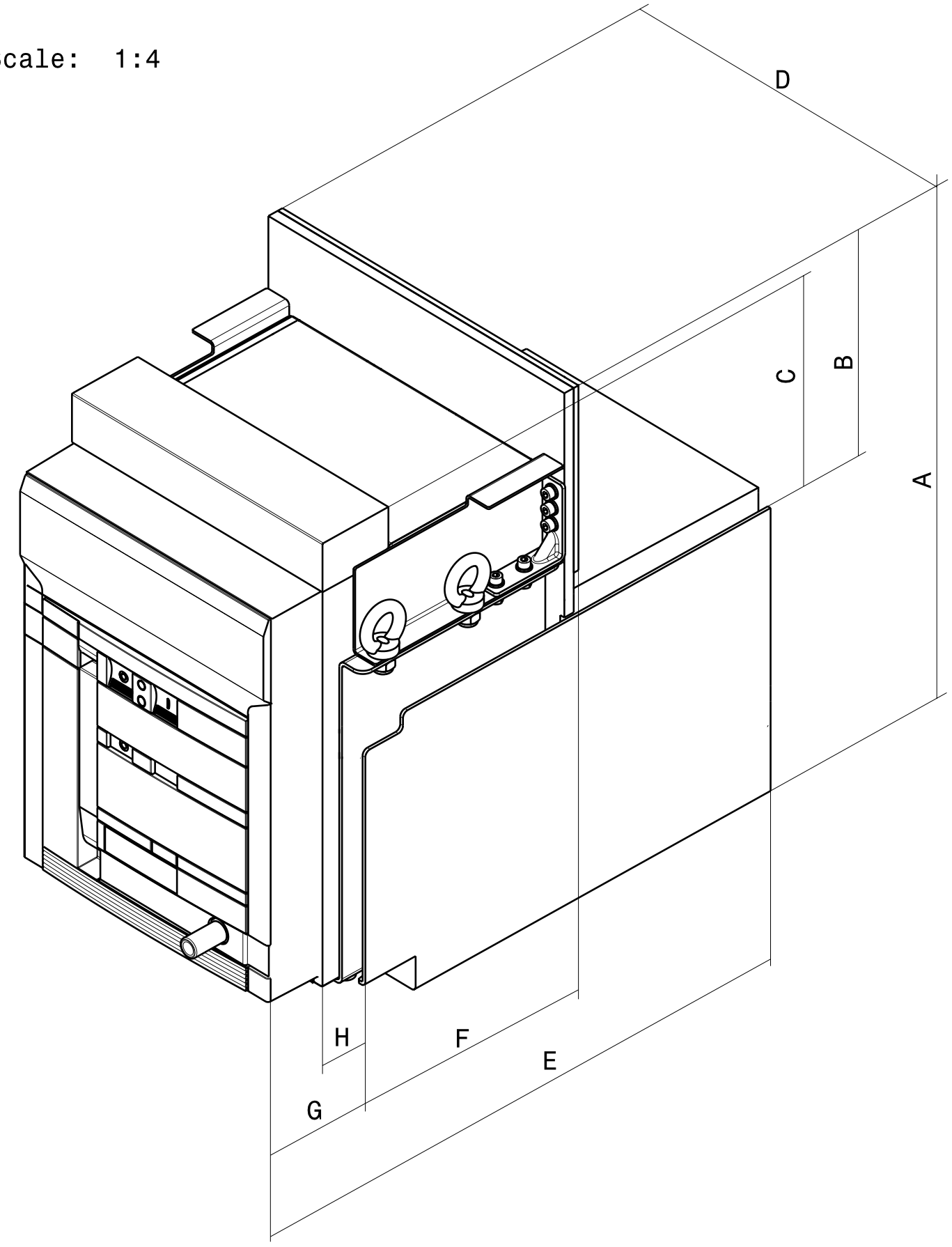

		A	B	C	D	E	F	G	H
G2_III	F1_III	480	215	180	327	515	230	80	25
G2_IV	F1_IV	480	215	180	422	515	230	80	25
	F2_III	480	215	180	411	515	230	80	25
	F2_IV	480	215	180	506	515	230	80	25

ABB

ABB S.p.A.
ABB SACE Division
Low Voltage Breakers

Doc. No.
N. Doc.
1SDH001359R0001

Scale
Scala
1:4

Sh. No.
N. Pag.