TECHNICAL DATASHEET 1SNC166013D0201 - CATALOGUE PAGE 1SNC166013S0201

DBL distribution blocks

Single pole

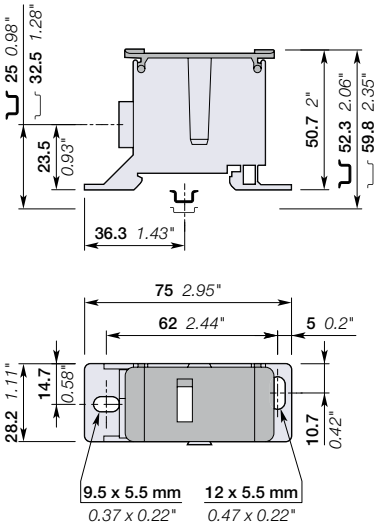

3D CAD outline drawings available on "Control Product 3D" portal

35 mm²

2 AWG

28.2 mm 1.11 in spacing

- 3 configurations: distribute unipolar and multipolar power lines, or combine several inputs
- Mount it on Din rail or plate and save up to 50% rail space compared to conventional copper bars
- Reduce the assembly time by 80% by avoiding to use fastening and isolating components
- Increase the number of outputs by using the optional input and connecting two DBL together
- Easy identification with the reversible cover and delivered pre-printed markers L1, L2, L3, N, PE, +, –.

Ordering details

Color	Type	Order code	EAN code	Pkg qty	Weight (1 pce) g
Grey	DBL125	1SNL312510R0000	3472599856585	1	122

Declarations and certificates

CE, CB, RoHS, USR, CSA, EAC, BV

Flexible without ferrule (IEC V-K, UL class G…K)	Flexible with ferrule (IEC V-K, UL class G…K)	Solid (IEC V-U class 1, UL solid)	Rigid stranded (IEC V-R class 2, UL class B/C)
⊘ Not allowed	✓ Allowed	✓ Allowed	✓ Allowed

Declarations and certificates

		Document Part Number
CE	UE	1SND225005U1000
CB	CB	1SND166005A0201
RoHS	RoHS	1SND230557F0201
USR	USR	1SND166006A0201
CSA	CSA	1SND166007A0201
EAC	EAC	1SND161011A1100
BV	BV	1SND166008A0200

General information*

The following information must be strictly adhered to in order to guarantee the terminal block electrical, mechanical and environmental performance.

Protection	IEC 60947-1	IP20	NEMA 1
Rail		TH 35-7.5, TH 35-15	

Mounting instructions

	Circuit 1			Circuit 2		
Operating tool	Allen key			Allen key		
		4 mm	0.16 in		3 mm	0.12 in
Torque		3.5 ... 5 Nm	31 ... 44 lb.in		2 ... 3 Nm	18 ... 26.5 lb.in
Wire stripping length		15 mm	0.59 in		11 mm	0.43 in

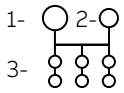

	Circuit 3			Circuit 4		
Operating tool	Posidriv - flat screwdriver					
		5.5 mm	0.22 in			
Torque		2 ... 3 Nm	18 ... 26.5 lb.in			
Wire stripping length		11 mm	0.43 in			

* instructions given for 1 pole, to be repeated on each block module

Material specifications

Insulating material		Polyamide
CTI		600 V
Flammability	**UL94**	V0
	EN 45545	HL3 R22
	Needle flame test IEC 60695-11-5	Compliant
Connector Material		Brass with tin platting

Connecting capacity per circuit

		Circuit 1		Circuit 2	
1 Rigid - Solid / Stranded conductor	**Norme**	IEC 60947-7-1	UL1059	IEC60947-7-1	UL1059
	Value	10 ... 35 mm²	8 ... 2 AWG	6 ... 16 mm²	10 ... 6 AWG
1 Flexible conductor with ferrule	**Norme**	IEC 60947-7-1		IEC60947-7-1	
	Value	10 ... 35 mm²	8 ... 2 AWG	2.5 ... 16 mm²	14 ... 6 AWG
		Circuit 3		**Circuit 4**	
1 Rigid - Solid / Stranded conductor	**Norme**				
	Value	2.5 ... 16 mm²	14 ... 6 AWG		
1 Flexible conductor with ferrule	**Norme**				
	Value	2.5 ... 16 mm²	14 ... 6 AWG		
Ferrule maximum outer diameter or conductor insulation maximum outer diameter		Ø Max.			

The "Connecting capacity with ferrule" data is guaranteed with ABB crimping tool PS-3 (crimping capacity up to 10 mm²).

Flexible without ferrule (IEC V-K, UL class G...K)	Flexible with ferrule (IEC V-K, UL class G...K)	Solid (IEC V-U class 1, UL solid)	Rigid stranded (IEC V-R class 2, UL class B/C)
⊘ Not allowed	✓ Allowed	✓ Allowed	✓ Allowed

As part of its on-going product improvement, ABB reserves the right to modify the characteristics or the products described in this document.
The information given is not contractual. For further details please contact the ABB company marketing these products in your country.

Multi connecting capacity per clamp

2 Rigid - Solid / Stranded conductors	**Norme**	
	Value	
2 Flexible conductors	**Norme**	
	Value	
2 Flexible conductors with twin ferrule	**Norme**	
	Value	

Don't mix **solid and flexible** conductors **in the same clamp.**
Don't mix **solid or flexible** conductors of different sizes **in the same clamp.**
The "Connecting capacity with ferrule" data is guaranteed with ABB crimping tool PS-3 (crimping capacity up to 10 mm²).

Cross section

Rated cross section	**IEC60947-7-1**	35 mm²	**UL1059**	2 AWG
Maximum cross section	**Manufacturer data**	35 mm²	**Manufacturer data**	2 AWG

Electrical characteristics
Current

Rated current		**IEC60947-7-1**	125 A	
	Field and factory wiring Cat.2	**UL 1059**	115 A	
	Factory wiring Cat.1	**UL 1059**		
		CSA-C-22.2 n° 158	115 A	
Maximum Exe current		**IEC/EN 60079-7**		
Rated short-time withstand current 1 s (Icw)		**IEC60947-7-1**	4200 A	
Short-time withstand current	**0.5 s**	**Manufacturer data**		
	5 s	**Manufacturer data**		
	10 s	**Manufacturer data**		
	30 s	**Manufacturer data**		
	1 mn	**Manufacturer data**		
Rated short-circuit withstand current		**UL 1059**		
Max. current (45° temperature increase) / Max. cross section (mm²)		**Manufacturer data**	125 A	35 mm²
Maximum short circuit current (1s)		**Manufacturer data**	4200 A	

Short Circuit Current Rating (SCCR) SA UL 1059 supplement

SCCR		**UL 1059**	100 kA
With the following configurations:			
	Suitable conductor wire range		8 ... 2 AWG
	Maximum voltage		600 V
	Fuse class / Max. amp. Rating	**J**	250 A
		T	300 A
		RK1	200 A
		RK5	100 A
		G	60 A
		CC	30 A

Mounting instructions

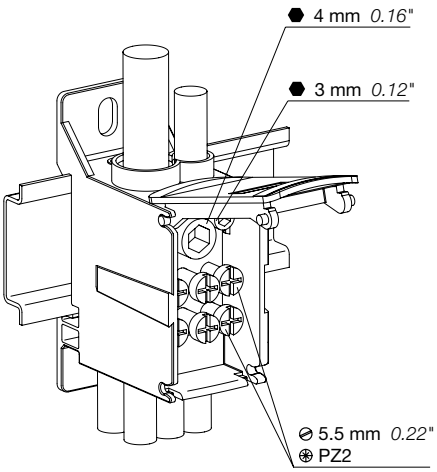

Flexible without ferrule (IEC V-K, UL class G…K)	Flexible with ferrule (IEC V-K, UL class G…K)	Solid (IEC V-U class 1, UL solid)	Rigid stranded (IEC V-R class 2, UL class B/C)
⊘ Not allowed	✓ Allowed	✓ Allowed	✓ Allowed

As part of its on-going product improvement, ABB reserves the right to modify the characteristics or the products described in this document.
The information given is not contractual. For further details please contact the ABB company marketing these products in your country.

Voltage

Rated voltage	**IEC 60947-1**	1500 V DC	1000 V AC
Rated voltage	**UL 1059**	1000 V AC	
Use Group	**UL 1059**	E	
Rated voltage	**CSA-C-22.2 n° 158**	1000 V AC	
Rated voltage Ex e	**IEC/EN 60079-7**		
Rated impulse withstand voltage	**IEC 60947-1**	8000 V	
Dielectric test voltage	**IEC 60947-1**	2200 V	
Pollution degree	**IEC 60947-1**	3	
Overvoltage category	**IEC 60947-1**	III	

Temperature range

Ambient temperature min/max	**Storage**	-55 ... +110 °C	-67 ... +230 °F
	Installing	-5 ... +40 °C	+23 ... +104 °F
	Service	-55 ... +110 °C	-67 ... +230 °F

Current Derating curve for continuous service temperature

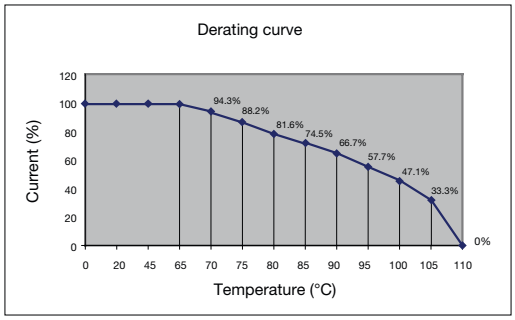

Dissipated power

Maximum dissipated power at rated current	**IEC 60947-7-1**	4 W
Maximum dissipated power at maximum Exe current	**IEC 60079-7**	

DBL terminal block accessories compatibility

Some accessories may modify the terminal block's rating. See complete information in the accessories "Technical Datasheet".

Environmental characteristics
Additional climatic tests

Cyclic damp heat		**IEC 60068-2-30**	Compliant
	Conditions	**Temperature**	55 °C
		Relative humidity	95 %
		Number of cycles (1 cycle = 24h)	2
Damp heat steady state		**IEC 60068-2-78**	Compliant
	Conditions	**Temperature**	40 °C
		Relative humidity	93 %
		Duration of test	96 h

DBL terminal block accessories compatibility

Description			Color	Type	Order code	Pkg qty	Weight (1 pce) g
End stops	10 mm	0.394 in	Dark grey	BAM4	1SNK900001R0000	50	14.00
	5.2 mm	0.205 in		BAZ1	1SNK900002R0000	50	5.30
	10 mm	0.394 in		BAZH1	1SNK900102R0000	20	24.00
Terminal block markers	Blank marker		White	MG-CPM 13 41790	1SNB041790R0512	1960	0.236
	Blank card			MC512PA	1SNK149999R0000	20	10.00
			Green	MC512PA-GN	1SNK149997R0000	20	10.00
			Blue	MC512PA-BL	1SNK149998R0000	20	10.00

Flexible without ferrule (IEC V-K, UL class G...K)	Flexible with ferrule (IEC V-K, UL class G...K)	Solid (IEC V-U class 1, UL solid)	Rigid stranded (IEC V-R class 2, UL class B/C)
⊘ Not allowed	✓ Allowed	✓ Allowed	✓ Allowed

As part of its on-going product improvement, ABB reserves the right to modify the characteristics or the products described in this document.
The information given is not contractual. For further details please contact the ABB company marketing these products in your country.

Flexible without ferrule (IEC V-K, UL class G…K)	Flexible with ferrule (IEC V-K, UL class G…K)	Solid (IEC V-U class 1, UL solid)	Rigid stranded (IEC V-R class 2, UL class B/C)
⊘ Not allowed	✓ Allowed	✓ Allowed	✓ Allowed

As part of its on-going product improvement, ABB reserves the right to modify the characteristics or the products described in this document.
The information given is not contractual. For further details please contact the ABB company marketing these products in your country.

—

ABB France
Electrification Products Division
Low voltage Products and systems
3, rue Jean Perrin
F-69687 Chassieu cedex / France
You can find the address of your local sales organization on the ABB home page

http://new.abb.com/low-voltage

http://new.abb.com/low-voltage/products/connection-devices

We reserve the right to make technical changes or modify the contents of this document without prior notice.
ABB does not accept any responsibility whatsoever for potential errors or possible lack of information in this document.
We reserve all rights in this document and in the subject matter and illustrations contained therein. Any reproduction, disclosure to third parties or utilization of its contents – in whole or in parts – is forbidden without prior written consent of ABB.
Copyright© 2018 ABB - All rights reserved

1SNC166013D0201 - Printed in France (07.2018 PDF)