Technical catalogue | January 2013

Distribution switchgear

Power and productivity
for a better world™

Index

Presentation of the range 1

Gemini switchboards 2

ArTu L modular structures 3

ArTu M monobloc structures 4

ArTu K modular structures 5

In-depth technical information 6

Overall dimensions 7

Index of codes 8

ABB SACE Division – Environmental and Ethics Quality certificated

Among the companies in the Group, ABB SACE is up front in dedicating considerable resources to achieving sustainable development and environmental protection objectives. Confirmation of this is provided by all the company production sites having obtained ISO 9001 quality certification and ISO 14001 environmental management system certifications.

Using analysis tools such as LCA (Life Cycle Analysis), ABB SACE's design activities already include assessment and improvement of the environmental performances of its products over their whole life cycle during the initial stage, in order to guarantee optimisation of the technical and energy performances during service, to control and reduce environmental impact during the production stage and to define the end of life management scenarios.

The Garbagnate Monastero site has also obtained the certification of integrated management system QAS (Quality, Environment and Safety management system.)
All company sectors are, in fact, actively involved in implementing improvement policies for environmental management through rationalisation of consumption of raw materials and energy, prevention of pollution, respect of water and air, limitation of noise emission and reduction in waste from production processes, as well as carrying out periodic environmental audits at major suppliers 'premises.
Each of these objectives and activities is the result of farsightedness in adopting ecological policies and methods for reducing the environmental loads and, within the panorama of Italian companies, ABB SACE is a leader from this viewpoint, too, just as it is for the quality of its products.

ABB: Energy Efficiency for a sustainable development.

ABB takes care of its commitment in promoting environmental protection and development, providing sustainable products and solutions that contribute to improving energy efficiency and plant productivity, reducing at the same time CO_2 emissions.

Selection and design tools
Technical softwares

DOC 2
DOC 2 is a program for the design and calculation of single-line diagrams of low- and medium-voltage electrical systems, for selection of switching and protection devices and for testing and co-ordination of protection devices.
Thanks to the design functions provided by the integrated CAD, the new switchboard configuration module makes it possible to develop ABB electrical switchboard projects and produce commercial technical quotations with CAT.

CAT 7
CAT 7 is a tool allowing ABB SACE products to be easily chosen and fitted with accessories in order to rapidly and accurately prepare estimates and quotes.
With CAT 7 choosing and adding accessories to ABB SACE products is now easier and faster than ever, thanks to the new product selection mask and accessory module.

Curves
Curves is the most direct software for verifying the characteristics of protection devices and system components intervention.
Setting, verifying and documenting the calibration of release devices and co-ordinations is easier than ever before.

OTC
The OTC thermal calculation module makes it possible to verify the thermal performance of ABB switchboards and to size fans and air conditioning units to install on the panel.

Front CAD
FrontCAD is a CAD application for drawing the electric boards design and layouts.
FrontCAD contains a big library of blocks, shapes of many ABB products, like enclosures and other electrical devices; those draws can be used to create the CAD layout of distribution and automation switchboards.

FrontCAD is compatible with different type of CAD application.
“DOC & CAT” is the technical software suite which helps to bring projects and quotes to fruition easily, quickly and completely.
The entire software collection is available to download for free from the Online Business portal.
ABB Software Desktop is a platform for installing and managing these Softwares.
ABB Software Desktop automatically detects which programs are installed on the computer, allowing them to be updated.

Gemini.
Something completely different in switchboards.

Gemini. Quality and safety.
ABB's Gemini is designed and built in compliance with reference Standards that define its constructional and functional characteristics. In particular, the IP66 degree certifies that Gemini is totally protected against the infiltration of solid bodies and is resistant to the penetration of jets of water similar to sea waves.
Absolute protection is provided by double insulation even in the event of indirect contact.

Gemini. Fit for all applications.

Even in very difficult application circumstances, Gemini gives high-level performances, with resistance to fire and abnormal heat up to a temperature of 750 °C and a functioning temperature from -25 °C to 100 °C.
There are as many configurations as there are ABB devices for low voltage automation and distribution: moulded-case circuit breakers, modular circuit breakers, monitoring, control and signaling devices, wiring ducts and electrical connection systems.
All of these components give the “Gemini system” an enormous range of ad hoc solutions that are easy to assemble with the snap-on system.

ArTu.
Go ahead and select the switchgear you need.

ArTu. A great offer, really high performances

ABB proposes three series of switchgear with different characteristics thought up to make it possible to select the most suitable switchgear for the installation requirements. Different sizes for optimal use of the spaces available. Great savings in storage space is ensured by the rapid assembly kit containing so few pieces that skilled personnel is not required. IP degrees of protection for all types of application up IP65 - the only switchgear to reach such a high value. Extremely sturdy and flexible, it is made for plants up to 6300A.

ArTu. Born certified.

Fully checked and certified (IEC 60439-1 and IEC 61439-1 and 2 Standard) by an external independent organisation (Acae Lovag), the ArTu switchgear is a synonym of safety and quality. The certification is the fruit of severe tests carried out on the whole configuration, consisting of metalwork structures, circuit-breakers and busbar system.

Certificato N°OHS-015

RINA
OHSAS 18001
Certified Health & Safety System

Certificato N°1612/98/S

Member of CISQ Federation
RINA
ISO 14001:2004
Certified Environmental System

Certificato N° EMS-051

Member of CISQ Federation
RINA
ISO 9001:2000
Certified Quality System

Certificato N°SGI004

RINA
ISO 9001 · ISO 14001
OHSAS 18001
Certified Integrated Systems

ArTu. A long experience through many projects.

The ArTu switchgear was born from an innovative project, created around the needs of all the professional figures involved in building and installing switchgear. This is constantly updated on the basis of the numerous projects which over these past years have had the ArTu series of switchgear as their leading player (Airports, underground railways, hospitals, industrial complexes, residential complexes, ports, tunnels, stretches of railways, theatres, etc.).

ArTu L.
Everything you need simply and conveniently

ArTu L. Why complicate your life?
Up to 800A you have a series of both wall-mounted and floor-mounted switchgear available, able to ensure a high standard of quality along with maximum simplicity of selection and assembly.

Fitted with a structure, which is completely open at the sides, means you can carry out cabling very conveniently, with the switchgear placed horizontally on two trestles. And, if we are talking about cabling, there is nothing which simplifies and speeds it up better than the Unifix H or L wiring system, created by ABB for its modular and moulded-case circuit-breakers.
The cable riser container is available in a width of 300mm to take different busbar systems, and, furthermore, with a convenient box placed above the switchgear, increases the space available for the incoming cables.

ArTu M.
Top level functionality and protection.

ArTu M. Maximum protection up to 630A.
The ArTu M series switchgear is ideal for terminal wall-mounted switchgear with modular circuit-breakers and floor-mounted secondary distribution switchgear with moulded-case circuit-breakers up to 630A.

Many versions are available, for wall-mounted installation with depths of 150 and 200mm and for floor-mounted installation, with a depth of 250mm.
The degree of protection is at top market levels, reaching up to IP65, thanks to an innovative design and advanced construction systems.
The switchgear is available in 600mm useful width, with the possibility of installing 24 DIN modules in one row, and 800mm width choosing between installation of 24 DIN modules in one row plus the cable riser, or 36 DIN modules in one row.

ArTu K.
New horizons up to 6300A.

ArTu. High performances? No problem

The ArTu K series switchgear is ideal for primary distribution switchgear (Power Center type) with air and moulded-case circuit-breakers and any internal segregations up to Form 4, and for floor-mounted secondary distribution switchgear with moulded-case and modular circuit-breakers.

The ArTu K series consists of modular switchgear for floor-mounted installation with depths of 150, 225, 300, 500, 700 and 900mm, with IP31, IP41 and IP65 degrees of protection - the highest value available on the market.

Within the ArTu K series switchgear, like all the series in the range, it is possible to install ABB apparatus (System Pro M modular circuit-breakers, Tmax moulded-case circuit-breakers, T and XT series and Emax air circuit-breakers) with an excellent and certified level of integration. The switchgear is available in four functional widths (390, 600, 800mm and 1000mm) and in two functional heights (1800 and 2000mm), which allow installation of 9 and 10 modules 200mm in height respectively.

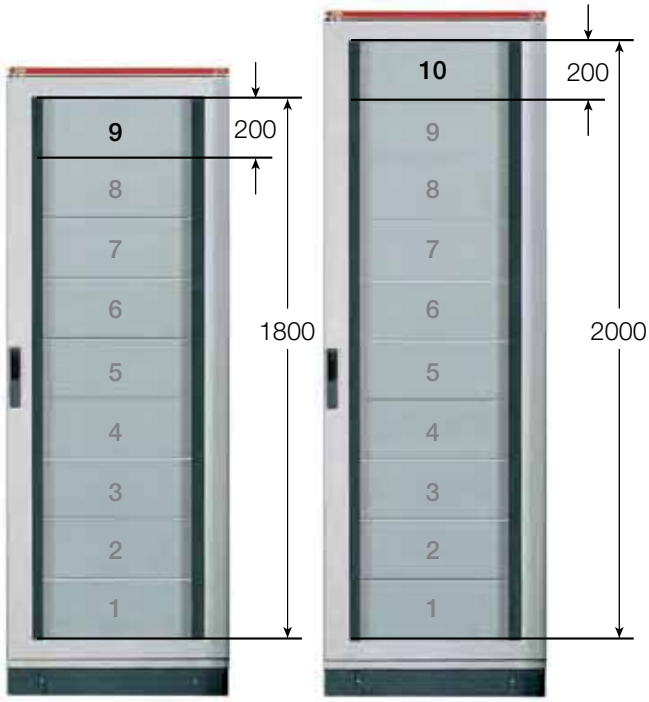

Presentation of the range

Characteristics of Gemini switchboards 1/2
Characteristics of ArTu 1/4
Composition of the series 1/8

1

Presentation of the range
Characteristics of Gemini switchboards

1

Gemini is the result of design work conducted by ABB with the direct collaboration of switchboard manufacturers, installers and designers who considered versatility to be the discriminating element when purchasing a switchboard, equally as important as sturdiness and reliability.

Gemini fulfils this requirement by providing a product that can be used for three different purposes: in addition to the basic configuration it also provides the components necessary for equipping it as an automation switchboard or as a distribution and mixed switchboard.

In all applications, compatibility with ABB protection, control and monitoring products means that a real system of integrated and complementary functions can be configured.
Typical examples of some Gemini applications can be seen in installations in industrial production departments and on board machines, in galvanization plants and varnishing cabins, in petrol stations and car-washing plants, boiler-rooms, car parks, shopping malls and in any other environments where distribution and automation demand specific safety requirements and service continuity.

Gemini also has flexible measurements, with six different box sizes and internal space to accommodate from 24 to 216 DIN modules.
To respect safety standards, all the switchboard's components can be fixed to the base plate or to the box frame without having to use any tools; wiring is carried out from the front followed by snapping the base plate or the frame onto the box. The patented frame is fitted with the cable duct incorporated in the uprights.
In its design, Gemini repeats the shapes and RAL 7035 grey color of the ArTu switchboards with which it can be configured as a main protection switchboard.

In the basic configuration, Gemini switchboards are composed of boxes in six different sizes ranging from 335x400x210 mm to 840x1005x360 mm (WxHxD, external measurements) and with opaque or transparent doors.

In both versions, the doors are reversible and clip onto the hinges without the need to use tools; the fact that they open at an angle of more than 180° means that it is easy to work on the components installed inside the switchboard. The seal applied by extrusion along the sides of the doors guarantees IP66 degree of protection.
Access to the inside of the switchboard is protected by a standard double bit lock that can be replaced by locks of another type available in the accessories. Boxes and doors can be requested either separately or as combined “box + door” codes, to make filling out the order form more flexible.
Inside the packages, the door is always wrapped separately and inserted inside a pocket that protects it from accidental damage until wiring is completed and the switchboard is installed.
Hole-cover plugs to guarantee IP protection and double insulation for wall mounting are also supplied with the pack together with the instruction sheet.

Gemini is made in a thermoplastic material that has a very low halogen content and is 100% recyclable.
The environmental compatibility of Gemini is an important objective right from the design phase where the Life Cycle Assessment (LCA) procedure, defined in 1990 during the Society of Environmental Toxicology and Chemistry Conference (Vermont, USA), is followed. Life Cycle Assessment is an objective method for analyzing the energy and environmental loads relating to a product, process or activity, carried out by identifying and quantifying energy, the materials used and emissions released into the environment. Divided into four phases, the assessment covers the entire life cycle of the product, process or activity, from the extraction and transformation of raw materials to manufacturing and distribution, and from usage to recycling and decommissioning.

No tools are needed for installation.
The doors hook onto the hinges with special hinge pins and are reversible.

Fixing hooks and feet allow the frame to be snap-mounted inside the box.

Presentation of the range
Characteristics of ArTu switchgears

1

The range of ABB SACE ArTu distribution switchgear provides a complete and integrated offer of monobloc metalwork structures and kit systems for main and sub low voltage distribution switchgear, which satisfy all plant requirements depending on the type of installation, degree of protection required, and electrical and mechanical characteristics.

Starting from simple assembly kits, the ArTu switchgear allows numerous switchgear configurations:
- for Power Center type main distribution, with a prevalence of air circuit-breaker and moulded-case circuit-breakers and any internal segregations up to Form 4;
- for floor-mounted secondary distribution, equipped with moulded-case and modular circuit-breakers;
- for wall-mounted end distribution, with just modular circuit-breakers.

The user of ABB SACE circuit-breakers can therefore have a complete system of enclosures, in accordance with the reference standards, which guarantees absolute compatibility between the various elements (enclosures, circuit-breakers and distribution systems), together with maximum assembly and cabling facility.
Special consideration has been given to cabling requirements, foreseeing dimensions of the structure, but also providing special seats for fixing the plastic cabling duct horizontally and vertically.

The ArTu switchgear is noted for the following features:

- integrated range of modular metalwork structures up to 6300 A with common accessories;
- possibility of fulfilling all application requirements in terms of installation (wall-mounting, floor-standing, monobloc, corner versions and cabinet kits) and degree of protection (IP31, IP41, IP43, IP65);
- maximum integration with modular apparatus and the moulded-case and air circuit-breakers, so that additional drilling or adaptations are not required;
- minimum switchgear assembly times, thanks to the simplicity of the kits, standardisation of the small assembly items, self-supporting elements and the presence of clear reference points for assembly of the plates and panels;
- segregations in kits up to Form 4;
- use of the Unifix rapid cabling system.

The range of ArTu enclosure structures allows construction of numerous switchgear configurations

The ArTu switchgear allows segregations up to Form 4 to be made

The use and installation of the kits according to the instructions provided means that assembly and cabling times can be reduced to a minimum, for example thanks to the reference points for positioning the panels and plates, and that respect of the insulation distances and the rated characteristics of the circuit-breakers are guaranteed.
The ArTu range includes three different series of switchgear, which are completed with the same accessories:

ArTu L series

This consists of a range of modular switchgear kits, with a capacity of 36 modules per row and IP31 degree of protection (without door) or IP43 (basic version with door). Installation can be either wall or floor-standing:

- Wall-mounted ArTu L, with 600, 800, 1000, and 1200mm (useful) heights, 165mm depth, 600mm width. It allows installation of the modular System pro M apparatus, and moulded-case Tmax T1-T2-T3 circuit-breakers, XT1 and XT3 circuit breakers.
- Floor-standing ArTu L, with 1400, 1600, 1800, 2000mm (useful) heights, 195 mm depth, 600mm width. It allows installation of the modular System pro M apparatus and moulded-case Tmax T1…T6 800A circuit-breakers (fixed version with front terminals); XT1... XT4 (fixed version with front terminals).

ArTu M series

This consists of a range of monobloc switchgear for wall-mounted installation (with depths of 115 and 165mm and with IP65 degree of protection) or floor-standing installation (with depth of 195 mm and IP31 or IP65 degree of protection), where it is possible to mount System Pro M modular apparatus and Tmax T1, T2 and T3, XT1 and XT3 moulded-case circuit-breakers on a DIN rail.
In the wall-mounted versions (D =165 mm), the Tmax moulded-case circuit-breakers up to 250 A can be installed, whereas in the floor-mounted versions, the moulded case Tmax T series up to T6, XT series up to XT4 circuit-breakers can be installed.

ArTu K series

This consists of a range of modular switchgear kits for floor-standing installation with six different (useful) depths: 150, 225, 300, 500, 700 and 900 mm, and with IP31 degree of protection (without front door), IP41 (with front door and side ventilated panels) and up to IP65 (with front door and blind side panels). It is possible to install System Pro M modular apparatus, the ranges of T and XT series circuit-breakers in all their possible configurations, and Emax X1, E1, E2, E3, E4 and E6 air circuit-breakers.

Use and installation of the kits, according to the instructions provided, allow assembly and cabling times to be reduced to a minimum

Presentation of the range
Characteristics of ArTu switchgears

1

The ArTu switchgear has the following functional widths:
- 390 mm, for installation of moulded-case circuit-breakers up to 1600 A (T7);
- 600 mm, which is the basic dimension for installation of all the apparatus;
- 800 mm, for making the lateral cable container inside the structure of floor-mounted switchgear or to use panels with 36 DIN modules in one row.
- 1000mm, for installation of Emax E4, E6 air circuit-breakers.

The panels for Tmax, and Emax circuit-breakers have 100 mm modularity.
The useful inside height space varies from 600 mm (L wall-mounted series) to 2000 mm (L and M floor-standing series and K series), offering optimisation and automatically reducing the spaces taken up by the switchgear.
With the shaped section busbar system, ArTu switchgear for low voltage power distribution further enhance perfect integration with the apparatus and, in full conformity with the IEC 60439 Standard, can be certified by carrying out only the individual tests.
Using Artu enclosures and relative accessories together with modular apparatus and moulded-case and air circuit-breakers, it is therefore possible to build AS or ANS type switchgear without carrying out further type tests, simply respecting the selection criteria and the assembly instructions for the various components.
The ArTu distribution system consists of:
- shaped section copper busbars with capacity from 400 A to 3200A;
- flat copper busbars up to 6300A;
- busbar holders and relative crosspieces for short-circuit withstand up to 105kA;
- flexible busbars for connection of the moulded-case circuit-breakers and screws and hammer for connection of the latter to the shaped section busbars.

The panels for Tmax, and Emax circuit-breakers have 100mm modularity

A peculiarity of the shaped section busbar system is its extremely compact dimensions, which allow it to be assembled directly inside the cable container, on the back or on the side of the structure, keeping front access. This is possible thanks to the scaled or linear type busbar holders, which also allow assembly in the L or M floor-mounted series of switchgear, with reduced dimensions.

The ABB SACE busbar and accessories system prepared for installation in ArTu distribution switchgear undergoes the short-circuit withstand tests with a value of In up to 6300 A and Icw up to 105 kA (1s) according to the IEC 60439-1 Standard, in ABB laboratories recognised by ACAE/LOVAG.

The Unifix rapid cabling system, which allows simple, rapid and safe cabling of all the ABB SACE apparatus, completes the switchgear. Unifix is available in two versions: the Unifix H series, suitable for structured cabling of moulded-case circuit-breakers up to 250A (T series up to T3 and XT series with XT1 and XT3) and modular System Pro-M circuit-breakers, and the Unifix L series, specifically for rapid cabling of modular System Pro-M circuit-breakers.

A fundamental characteristic of these systems is the possibility of combining different types of circuits (single-phase/three-phase/ auxiliary) within a single module.
Unifix also allows bench cabling to be carried out, and to then only install it in the switchgear at a later time, without any limitation of the types or combinations of apparatus which can be installed. This way cabling times are considerably reduced, making realisation of the power supply by means of cables superfluous, as the rigid coupled connectors - standardised for the different types of apparatus - do, in fact, see to this.

The ABB SACE busbar system and accessories for installation in the distribution switchgear

The Unifix rapid cabling system

Presentation of the range
Composition of the series

1

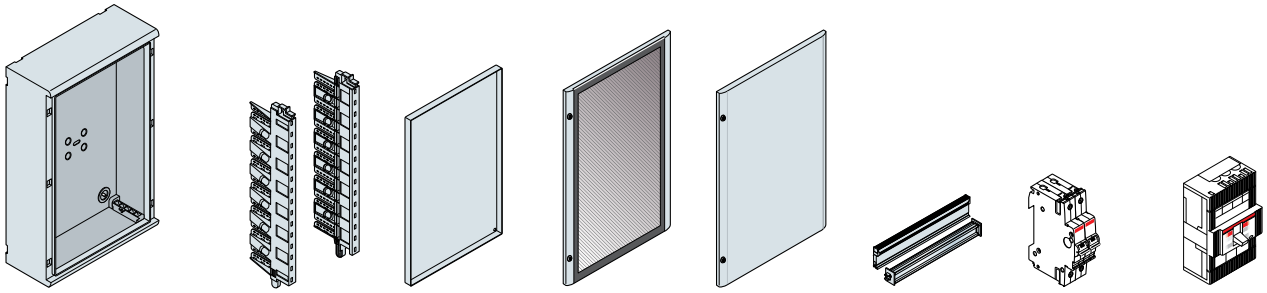

Gemini

Functional dimensions (mm)			Functional frames	Front coverings			Unifix L distribution system	System Pro *M* modular apparatus	Tmax moulded-case circuit-breakers T1…T5 630A
Height	Width	Depth		counterdoor IP40	glass door IP66	blind door IP66			
300	250	180	■	■	■	■	■	■	
450	375	230	■	■	■	■	■	■	■
600	375	230	■	■	■	■	■	■	■
600	500	230	■	■	■	■	■	■	■
750	500	330	■	■	■	■	■	■	■
900	750	300	■	■	■		■	■	■

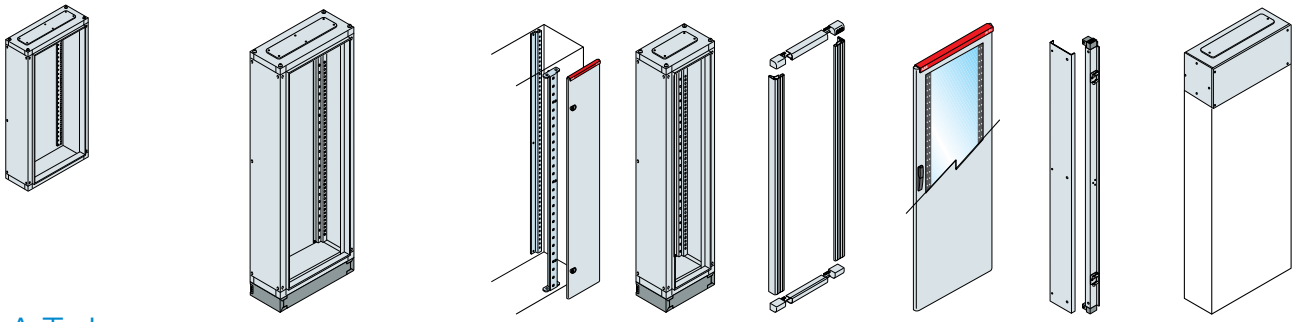

ArTu L

Wall structures Functional dimensions (mm)			Floor structures Functional dimensions (mm)			Internal cable container Width	Additional cable container Width	Front covers		Removable side panels	Cable connection box
Height	Width	Depth	Height	Width	Depth	200mm	300mm	IP31	IP43		
600	600	165					■	■	■		
800	600	165					■	■	■		
1000	600	165					■	■	■		
1200	600	165					■	■	■		
			1400	600	195		■	■	■	■	■
			1600	600	195		■	■	■	■	■
			1800	600	195		■	■	■	■	■
			2000	600	195		■	■	■	■	■
			1400	800	195	■	■	■	■	■	■
			1600	800	195	■	■	■	■	■	■
			1800	800	195	■	■	■	■	■	■
			2000	800	195	■	■	■	■	■	■

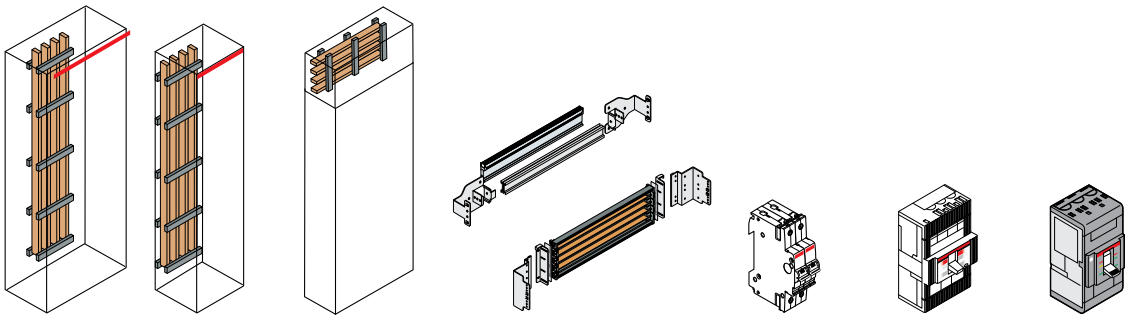

	Busbar distribution system			Unifix distribution system			Tmax moulded-case circuit-breakers		
	Vert. back	Vert. cable container	Horiz. box	L Series	H Series	System Pro *M* modular apparatus	T1-T2-T3-T4-T5 ≤400A	T6 ≤800A	XT1-XT2-XT3-XT4 ≤250A
	■	■		■	■	■	■		■
	■	■		■	■	■	■		■
	■	■		■	■	■	■		■
	■	■		■	■	■	■		■
	■	■	■	■	■	■	■	■	■
	■	■	■	■	■	■	■	■	■
	■	■	■	■	■	■	■	■	■
	■	■	■	■	■	■	■	■	■
	■	■	■	■	■	■	■	■	■
	■	■	■	■	■	■	■	■	■
	■	■	■	■	■	■	■	■	■
	■	■	■	■	■	■	■	■	■

Presentation of the range
Composition of the series

1

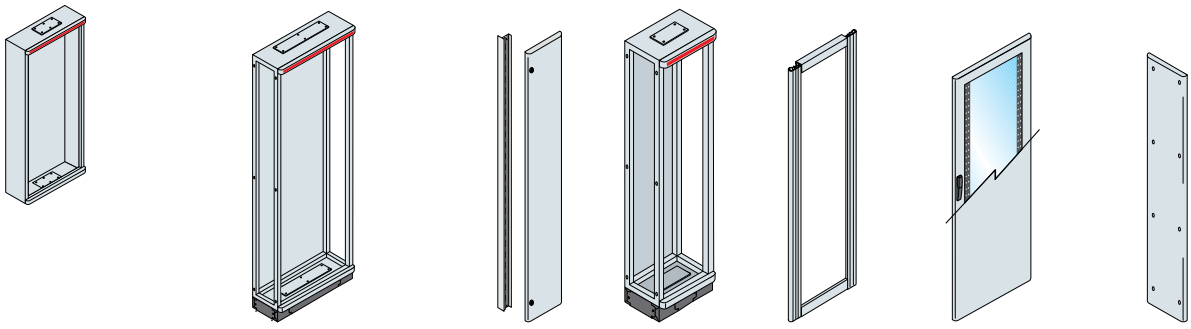

ArTu M

Wall structures Functional dimensions (mm)			Floor structures Functional dimensions (mm)			Internal cable container Width	Additional cable container Width	Front covers		Side covers
Height	Width	Depth	Height	Width	Depth		300mm	IP31	IP65	IP65
600	600	115							■	
800	600	115							■	
	600	165							■	
1000	600	165							■	
1200	600	165							■	
			1400	600	195		■	■	■	■
			1600	600	195		■	■	■	■
				800	195	■	■	■	■	■
			1800	600	195		■	■	■	■
				800	195	■	■	■	■	■
			2000	600	195		■	■	■	■
				800	195	■	■	■	■	■

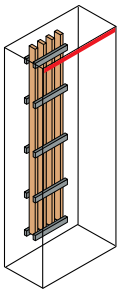
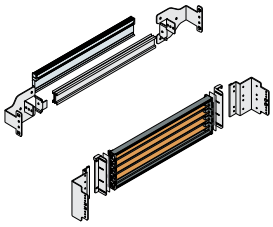
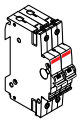
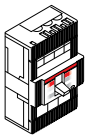
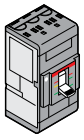

	Busbar distri-bution system	Unifix distribution system		System Pro *M* modular apparatus	Tmax moulded-case circuit-breakers				
	Vert. cable container	L Series	H Series		T1-T2 ≤160A	T3 ≤250A	T4-T5-T6 ≤630A	XT1-XT3 ≤250A	XT2-XT4 ≤250A
		■		■	■			■	
		■		■	■			■	
		■		■	■	■		■	
		■		■	■	■		■	
		■		■	■	■	■	■	
	■	■	■	■	■	■	■	■	■
	■	■	■	■	■	■	■	■	■
	■	■	■	■	■	■	■	■	■
	■	■	■	■	■	■	■	■	■
	■	■	■	■	■	■	■	■	■
	■	■	■	■	■	■	■	■	■
	■	■	■	■	■	■	■	■	■

Presentation of the range
Composition of the series

1

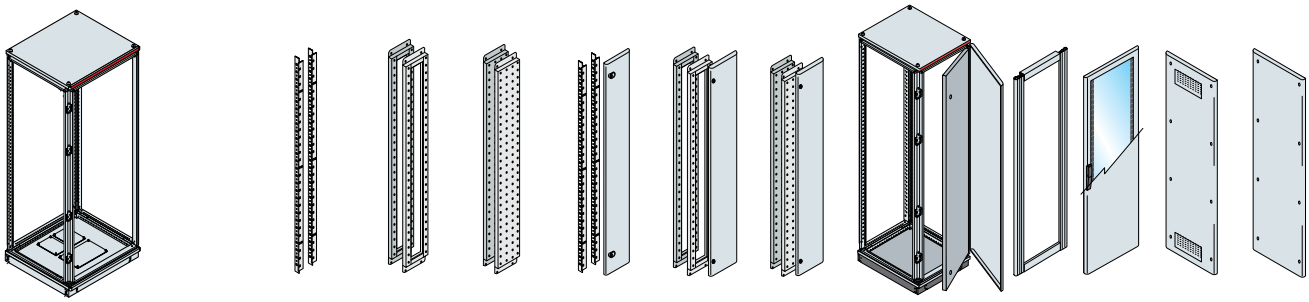

ArTu K

Functional dimensions (mm)			Functional frames			Internal cable container			Addit. cable container Width 300mm	Front coverings		Side coverings	
Height	Width	Depth	reduced	open	closed	with reduced frames	for frames open	for frames closed		IP31/41	IP65	IP31/41	IP65
1600	600	150	■						■	■	■		■
	800	150	■			■			■	■	■		■
1800 2000	390	225	■	■					■	■	■		■
	390	300	■	■					■	■	■		■
	390	500	■	■	■				■	■	■	■	■
	390	700	■	■	■				■	■	■	■	■
	390	900	■	■	■				■	■	■	■	■
	600	150	■						■	■	■		■
	600	225	■	■					■	■	■		■
	600	300	■	■					■	■	■		■
	600	500	■	■	■				■	■	■	■	■
	600	700	■	■	■				■	■	■	■	■
	600	900	■	■	■				■	■	■	■	■
	800	150	■			■			■	■	■		■
	800	225	■	■		■			■	■	■		■
	800	300	■	■		■			■	■	■		■
	800	500	■	■	■		■	■	■	■	■	■	■
	800	700	■	■	■		■	■	■	■	■	■	■
	800	900	■	■	■		■	■	■	■	■	■	■
	1000	900	■	■	■		■	■	■	■	■	■	■

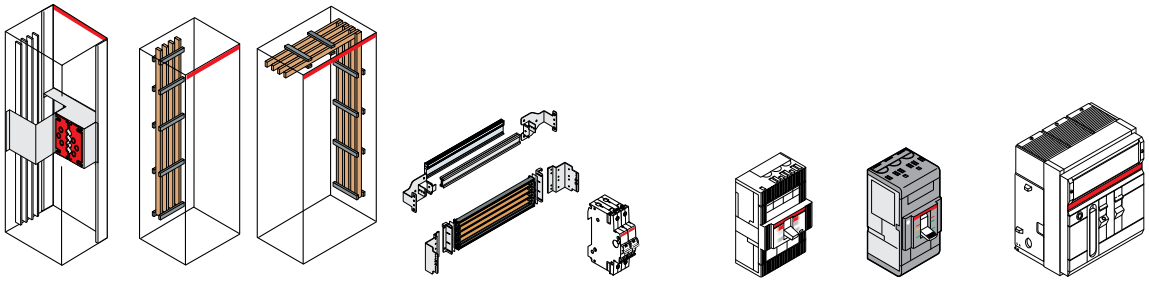

		Busbar distribution system			Unifix distribution system			Tmax moulded-case circuit-breakers			Emax air circuit-breakers			
	Segregations Form 2/3/4	Vert. back	Vert. side	Horiz.	L Series	H Series	System Pro *M* modular apparatus	T1…T6	T7/T8	XT1…XT4 250A	X1	E1-E2-E3 ≤3200A	E4 4000A	E6 6300A
		■	■		■	■	■	■		■				
		■	■		■	■	■	■		■				
		■	■		■	■	■	■		■				
		■	■	■	■	■	■	■		■				
	■	■	■	■	■	■	■	■	■	■	■			
	■	■	■	■	■	■	■	■	■	■	■			
	■	■	■	■	■	■	■	■	■	■	■			
		■	■		■	■	■	■		■				
		■	■		■	■	■	■		■				
		■	■	■	■	■	■	■		■				
	■	■	■	■	■	■	■	■	■	■	■	■		
	■	■	■	■	■	■	■	■	■	■	■	■		
	■	■	■	■	■	■	■	■	■	■	■	■		
		■	■		■	■	■	■		■				
		■	■		■	■	■	■		■				
		■	■	■	■	■	■	■		■				
	■	■	■	■	■	■	■	■	■	■	■	■		
	■	■	■	■	■	■	■	■	■	■	■	■		
	■	■	■	■	■	■	■	■	■	■	■	■	■	
													■	■

Gemini switchboards

General	2/2
Selection of the structure	2/4
Kit for installing apparatus	2/6
Distribution system	2/9
Ordering codes	2/11
Examples of configurations	2/23

Gemini switchboards
General

ABB SACE's Gemini range is revolutionizing the market of low voltage electric insulating switchboards. The reason for this is that it is the first switchboard made in thermoplastic material, to which the co-injection molding technique gives the same mechanical characteristics as polyester.

This means that it is extremely sturdy, with its rigid covering and expanded internal core. Moreover, it contains no fiberglass, a material that with time rises to the surface, jeopardizing the functioning and safety of switchboards made in polyester with which it is usually mixed.

Gemini switchboards have IP66 degree of protection (IP30 with the door open and with the appropriate components installed) and a very high resistance to chemical and atmospheric agents. This is the reason why Gemini guarantees excellent performances even in particularly severe operating conditions.

Gemini switchboards are made with co-injection, which ABB SACE is the first manufacturer in the electric field to use as a molding technique.
This process obtains a "sandwich" of two materials with a compact external covering and an expanded core, guaranteeing the highest level of mechanical protection against impacts (IK10) without the need to add hardening substances.

In distribution and mixed applications, the Gemini switchboard is designed to be fitted with System pro M modular devices and Tmax moulded-case circuit breakers.
The frame is the load-bearing element of the configuration: DIN rails, partial modular plates and the special Tmax mounting and cabling kits are snapped onto the uprights. All the components can be adjusted up to six levels of depth with 12.5 mm pitch and arranged in height with a standard installation pitch of 150, 225 and 300 mm and 75 mm distance between the rows.

Blank or drilled front panels are applied to protect the equipment and these can be hinged onto both sides; the cables are housed inside the vertical wiring duct integrated in the uprights according to an exclusive ABB patent.
Wiring is carried out by pulling out the frame and working from the front; the ergonomic grip and the standard feet and snap-on hooks supplied make it easy to insert it inside the switchboard after the job is finished.

To finish the job, the inner door can be mounted (reversible and in insulating material), guaranteeing IP30 degree of protection when the switchboard door is open.
No tools are needed unless the inner door is equipped with buttons, warning lights, etc.

The frame can be extracted to make wiring operations easier at the workbench.

The special structure of the inner perimeter of the box ensures further protection against the penetration of water. The box is supplied with a spirit level.

Technical characteristics

Compliance with Standards	CEI EN 50298, CEI 23-48, CEI 23-49, IEC 60670, CEI EN 60439-1 CEI EN 62208 - IEC 61439-1-2
Rated service voltage	Ue 1000 V a.c. - 1500 V c.c.
Operating temperature °C	-5 °C ÷ +40
Resistance to abnormal heat and fire	up to 750 °C
Degree of resistance to impacts	IK10 (IEC 62262)
Degree of protection (CEI EN 60529)	IP 30 open door
	IP 66 closed door
Recyclable	100%

Gemini switchboards
Selection of the structure

Rapid selection table

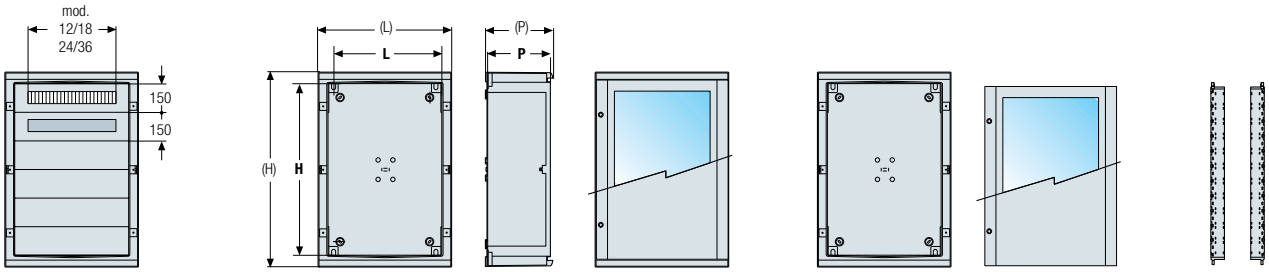

Size	N° of vertical mod. H=150mm	N° of installable DIN modules	External dimensions (H) mm	(W) mm	(D) mm	Functional dimensions H mm	W mm	D mm	Complete switchboards Transparent	Opaque	Box	Door Transparent	Opaque	Uprights
1	2	24 (12x2)	400	335	210	300	250	180	1SL0211A00	1SL0201A00	1SL0221A00	1SL0241A00	1SL0231A00	1SL0283A00
2	3	54 (18x3)	550	460	260	450	375	230	1SL0212A00	1SL0202A00	1SL0222A00	1SL0242A00	1SL0232A00	1SL0284A00
3	4	72 (18x4)	700	460	260	600	375	230	1SL0213A00	1SL0203A00	1SL0223A00	1SL0243A00	1SL0233A00	1SL0285A00
4	4	96 (24x4)	700	580	260	600	500	230	1SL0214A00	1SL0204A00	1SL0224A00	1SL0244A00	1SL0234A00	1SL0285A00
5	5	120 (24x5)	855	585	360	750	500	330	1SL0215A00	1SL0205A00	1SL0225A00	1SL0245A00	1SL0235A00	1SL0286A00
6	6	216 (36x6)	1005	840	360	900	750	330	1SL0216A00	1SL0206A00	1SL0226A00	1SL0246A00	1SL0236A00	1SL0287A00

Sizes available

Available in 6 different sizes with transparent or opaque door, the Gemini switchboards are suitable for installation in any application context.

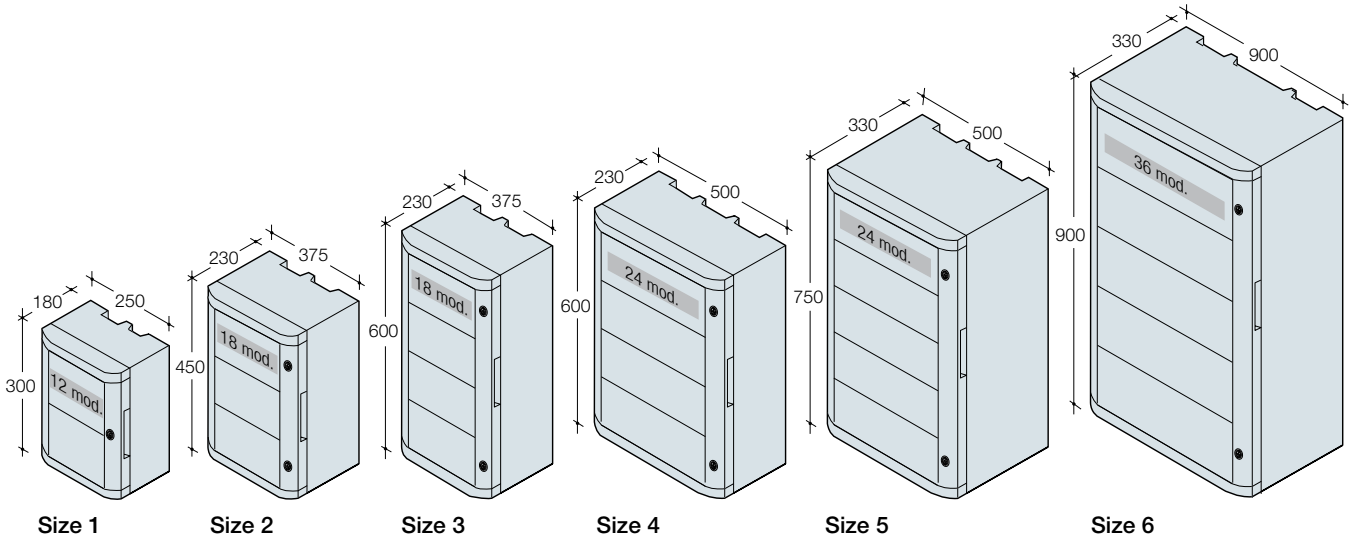

> Selection by components page 2/11 > In-depth technical information page 6/1 > Overall dimensions page 7/1

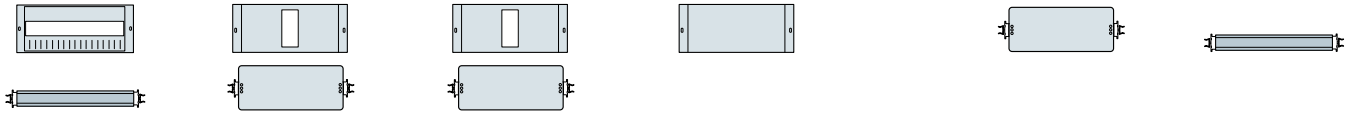

	DIN rail kit DIN rail+drilled panel		Kit for Tmax plate+drilled panel		Kit for Tmax XT series plate+drilled panel		Blank panel			Modular plate		
	1 mod. H=150mm	1+1/2 mod. H=225mm	1 mod. H=150mm	2 mod. H=300mm	1 mod. H=150mm	2 mod. H=300mm	1/2 mod. H=75mm	1 mod. H=150mm	2 mod. H=300mm	1 mod. H=150mm	2 mod. H=300mm	DIN rail
	1SL0307A00	-	-	-	-	-	1SL0318A00	1SL0324A00	1SL0330A00	1SL0296A00	-	1SL0290A00
	1SL0308A00	1SL0313A00	1SL0336A00	1SL0370A00	1SL0373A00	1SL0376A00	1SL0319A00	1SL0325A00	1SL0331A00	1SL0297A00	1SL0302A00	1SL0291A00
	1SL0308A00	1SL0313A00	1SL0336A00	1SL0370A00	1SL0373A00	1SL0376A00	1SL0319A00	1SL0325A00	1SL0331A00	1SL0297A00	1SL0302A00	1SL0291A00
	1SL0309A00	1SL0314A00	1SL0337A00	1SL0371A00	1SL0374A00	1SL0377A00	1SL0320A00	1SL0326A00	1SL0332A00	1SL0298A00	1SL0303A00	1SL0292A00
	1SL0309A00	1SL0314A00	1SL0337A00	1SL0371A00	1SL0374A00	1SL0377A00	1SL0320A00	1SL0326A00	1SL0332A00	1SL0298A00	1SL0303A00	1SL0292A00
	1SL0310A00	1SL0315A00	1SL0338A00	1SL0372A00	1SL0375A00	1SL0378A00	1SL0321A00	1SL0327A00	1SL0333A00	1SL0299A00	1SL0304A00	1SL0293A00

> Selection by components page 2/11 > In-depth technical information page 6/1 > Overall dimensions page 7/1

Gemini switchboards
Selection of the structure

Suggestion for installation of Tmax moulded-case circuit breakers

2

The table indicates the type of installation required for the different versions of Tmax moulded-case circuit breakers in Gemini switchboards. Before carrying out wiring operations check compliance with Standards on the basis of the technical characteristics of the switchboard and circuit breaker (CEI 23-51 or CEI EN 60439-1).

		T1				T2				T3				T4				T5				XT1				XT2				XT3				XT4			
Size	**Installation**	3p	4p	3p D	4p D	3p	4p	3p D	4p D	3p	4p	3p D	4p D	3p	4p	3p D	4p D	3p	4p	3p D	4p D	3p	4p	3p D	4p D	3p	4p	3p D	4p D	3p	4p	3p D	4p D	3p	4p	3p D	4p D
1	D	■	■	■	■	■	■	■	■	■	■	■	■									■	■	■	■	■	■	■	■	■	■	■	■	■	■	■	■
	O1	■	■	■	■	■	■	■	■													■	■	■	■	■	■	■	■	■	■			■	■		
	T	■	■	■	■	■	■	■	■	■	■	■	■	■	■			■	■			■	■	■	■	■	■	■	■	■	■	■	■	■	■	■	■
2	D	■	■	■	■	■	■	■	■	■	■	■	■									■	■	■	■	■	■	■	■	■	■	■	■	■	■	■	■
	K1	■	■	■	■	■	■	■														■	■	■													
	K2								■	■	■	■	■										■	■	■					■	■	■	■				
	O1	■	■	■	■	■	■	■	■	■	■	■	■	■		■						■	■	■	■	■	■	■	■	■	■	■		■	■	■	■
	O2	■	■	■	■	■	■	■	■	■	■	■	■	■	■	■	■	■	■			■	■	■	■	■	■	■	■	■	■	■	■	■	■	■	■
	T	■	■	■	■	■	■	■	■	■	■	■	■	■	■	■	■	■	■	■	■	■	■	■	■	■	■	■	■	■	■	■	■	■	■	■	■
3	D	■	■	■	■	■	■	■	■	■	■	■	■									■	■	■	■	■	■	■	■	■	■	■	■	■	■	■	■
	K1	■	■	■	■	■	■	■														■	■	■													
	K2								■	■	■	■	■										■	■	■					■	■	■	■				
	O1	■	■	■	■	■	■	■	■	■	■	■	■	■		■						■	■	■	■	■	■	■	■	■	■	■		■	■	■	
	O2	■	■	■	■	■	■	■	■	■	■	■	■	■	■	■	■	■	■			■	■	■	■	■	■	■	■	■	■	■	■	■	■	■	■
	T	■	■	■	■	■	■	■	■	■	■	■	■	■	■	■	■	■	■	■	■	■	■	■	■	■	■	■	■	■	■	■	■	■	■	■	■
4	D	■	■	■	■	■	■	■	■	■	■	■	■									■	■	■	■	■	■	■	■	■	■	■	■	■	■	■	■
	K1	■	■	■	■	■	■	■														■	■	■													
	K2								■	■	■	■	■										■	■	■					■	■	■	■				
	O1	■	■	■	■	■	■	■	■	■	■	■	■	■		■						■	■	■	■	■	■	■	■	■	■	■		■	■	■	■
	O2	■	■	■	■	■	■	■	■	■	■	■	■	■	■	■	■	■	■	■	■	■	■	■	■	■	■	■	■	■	■	■	■	■	■	■	■
	T	■	■	■	■	■	■	■	■	■	■	■	■	■	■	■	■	■	■	■	■	■	■	■	■	■	■	■	■	■	■	■	■	■	■	■	■
5	D	■	■	■	■	■	■	■	■	■	■	■	■									■	■	■	■	■	■	■	■	■	■	■	■	■	■	■	■
	K1	■	■	■	■	■	■	■														■	■	■													
	K2								■	■	■	■	■										■	■	■					■	■	■	■				
	O1	■	■	■	■	■	■	■	■	■	■	■	■	■		■						■	■	■	■	■	■	■	■	■	■	■		■	■	■	
	O2	■	■	■	■	■	■	■	■	■	■	■	■	■	■	■	■	■	■	■	■	■	■	■	■	■	■	■	■	■	■	■	■	■	■	■	■
	T	■	■	■	■	■	■	■	■	■	■	■	■	■	■	■	■	■	■	■	■	■	■	■	■	■	■	■	■	■	■	■	■	■	■	■	■
6	D	■	■	■	■	■	■	■	■	■	■	■	■									■	■	■	■	■	■	■	■	■	■	■	■	■	■	■	■
	K1	■	■	■	■	■	■	■														■	■	■													
	K2								■	■	■	■	■										■	■	■					■	■	■	■				
	O1	■	■	■	■	■	■	■	■	■	■	■	■	■		■						■	■	■	■	■	■	■	■	■	■	■		■	■	■	■
	O2	■	■	■	■	■	■	■	■	■	■	■	■	■	■	■	■	■	■	■	■	■	■	■	■	■	■	■	■	■	■	■	■	■	■	■	■
	T	■	■	■	■	■	■	■	■	■	■	■	■	■	■	■	■	■	■	■	■	■	■	■	■	■	■	■	■	■	■	■	■	■	■	■	■

Caption

- D, installation on DIN rail
- K1, installation with Tmax kit H = 150 (holes made)
- K2, installation with Tmax kit H = 300 (holes made)
- O1, installation on modular plate (1 module, H = 150 mm)
- O2, installation on modular plate (2 modules, H = 300 mm)
- T, installation on total base plate

> Selection by components page 2/11 > In-depth technical information page 6/1 > Overall dimensions page 7/1

Horizontal installation

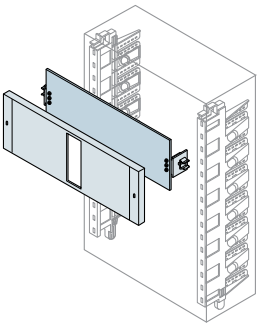

Kit for Tmax with pre-drilled holes

Fixed circuit-breaker with front terminals	N° poles	Dimensions H (mm)	Size/Codes		
			2/3	4/5	6
Tmax T1	03/4	150	1SL0336A00	1SL0337A00	1SL0338A00
Tmax T2	03/4	150	1SL0336A00	1SL0337A00	1SL0338A00
Tmax T2+diff.le	3	300	1SL0370A00	1SL0371A00	1SL0372A00
Tmax T3	03/4	300	1SL0370A00	1SL0371A00	1SL0372A00

Vertical installation

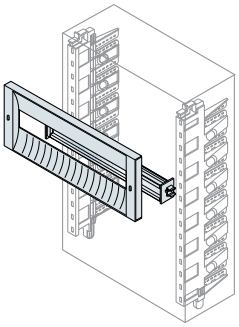

Installation on DIN rail

Fixed circuit-breaker with front terminals	N° poles	Dimensions H (mm)	Size/Codes			
			1	2/3	4/5	6
System Pro *M* compact modular apparatus		150	1SL0307A00	1SL0308A00	1SL0309A00	1SL0310A00
		225		1SL0313A00	1SL0314A00	1SL0315A00
Tmax T1-T2-T3	3/4	225		1SL0313A00	1SL0314A00	1SL0315A00

> Selection by components page 2/11 > In-depth technical information page 6/1 > Overall dimensions page 7/1

Gemini switchboards
Kit for installing apparatus

Wiring ducts

2

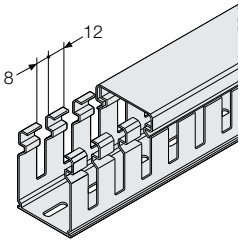

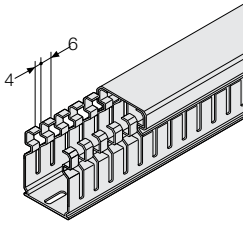

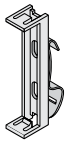

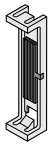

		Wiring ducts		Fix-O-rapid	
Base (mm)	**H (mm)**	**Slot 8-12 mm**	**Slot 4-6 mm**	**Rapid snap-on bases for DIN rail**	**Rapid snap-on bases for plate**
15	17	05 019	05 119	-	-
25	30	05 033	05 133	05 250	05 270
	40	05 043	05 143		
	60	05 063	05 163		
	80	05 083	05 183		
	100	05 094	05 194		
40	30	05 035	05 135	05 252	05 272
	40	05 045	05 145		
	60	05 065	05 165		
	80	05 085	05 185		
	100	05 095	05 195		
60	30	05 037	05 137	05 254	05 274
	40	05 047	05 147		
	60	05 067	05 167		
	80	05 087	05 187		
	100	05 096	05 196		
80	40	05 049	05 149	05 256	05 276
	60	05 069	05 169		
	80	05 089	05 189		
	100	05 097	05 197		
100	40	05 051	05 151	05 258	05 278
	60	05 071	05 171		
	80	05 091	05 191		
	100	05 098	05 198		
120	40	05 053	05 153	05 260	05 280
	80	05 093	05 193		
150	100	05 099	05 199	05 262	05 282

> Selection by components page 2/11 > In-depth technical information page 6/1 > Overall dimensions page 7/1

Distribution systems

Modular dividers

		Single-pole						Three-poles	
		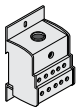		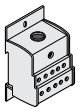		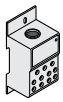	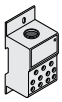	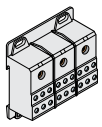	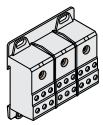
Code		AD1076	AD1080[1]	AD1007	D1081(2)	AD1030	AD1031	AD1075	AD1006
In	(A)	125	125	175	175	250	400	125	175
Icw	(kA)	4.4	4.2	11	1.1	21	21	4.4	11
Version	poles	1	1	1	1	1	1	3	3
Installation		DIN35/plate	DIN35/plate	DIN35/plate	DIN35/plate	DIN35/plate	DIN35/plate	DIN35/plate	DIN35/plate
Power supply Ø cable (mm²)	min.	10	6	16	10	35	95	10	16
	max	35	35	70	70	120	185	35	70
N°outgoing feeder Ø cable (mm²)	1,5÷10					4	4		
	2,5÷16	10	6	10	6	5	5	6	6
	2,5÷25					2	2		
Dimensions HxWxD	(mm)	71x45x42,5	74x27x47	71x45x42,5	92x35x49	95.5x45x49	95.5x45x49	71.5x80x42,5	71.5x80x42,5
N° DIN modules		2,5	1,5	2,5	2	3	3	4.5	4.5
Rated service voltage Ue	(V)	1000 Vca 1500 Vcc	1000 Vca 1500 Vcc	1000 Vca 1500 Vcc	1000 Vca 1500 Vcc	1000 Vca 1500 Vcc	1000 Vca 1500 Vcc	1000 Vca 1500 Vcc	1000 Vca 1500 Vcc
Degree of protection	IP	20	20	20	20	20	20	20	20

		Three-poles			
			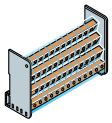	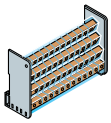	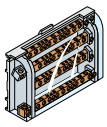
Code		AD1004	AD1028	AD1029	AD1027
In	(A)	125	125	125	160
Icw	(kA)	10	4.2	4.2	6.2
Ipk	(kA)	24	25	25	20
Version	poli	4.2	4	4	4
Installation		DIN35/plate	DIN35/plate	DIN35/plate	DIN35
Power supply Ø cable (mm²)	min.	6	6	6	10
	max	35	25 with cable terminal	25 with cable terminal	50
N°outgoing feeder Ø cable (mm²)		1/6 5/phase			
		1.5/6 4/neutral			
		1.5/10 2/phase	7	9	
		6/neutral			
		1.5/16		2	
		2.5/16			8
		6/25	2	2	3
Dimensions HxWxD	(mm)	74.5x98x45	93x89x48	96x126x48	90x160.5x50
N° DIN modules		5,5	5	7	9
Rated service voltage Ue	(V)	1000 Vca 1500 Vcc	440	440	440
Degree of protection	IP	20	20	20	20

[1] possibility of putting in parallel with AD1083 connections.

[2] possibility of putting in parallel with comb type connections (not supplied).

> Selection by components page 2/11 > In-depth technical information page 6/1 > Overall dimensions page 7/1

Gemini switchboards
Distribution systems

Unifix L

2

Technical characteristics		Unifix L
Rated service voltage (U_e)		400V AC
Rated insulation voltage (U_i)		500V AC
Rated impulse withstand voltage (U_{imp})		6kV
Rated frequency		50/60Hz
Rated current (I_n)	central power supply	100A
	lateral power supply	80A
Rated short-time withstand current (I_{cw})		
Maximum peak current (I_{pk})		
Maximum installable circuit-breaker size		100A
Conditioned short-circuit current (I_{cc})	Tmax T1	
	Tmax T2 N, S	
	Tmax T3	
With circuit-breaker	S200	6kA-400V
	S200M	10kA-400V
	S200P	25kA-400V
Degree of protection		IP20
Characteristics of the insulating material		Self-extinguishing thermoplastic V1 (UL94)
Characteristics of the conductor material		Electrolytic copper
Width (N° modules/mm)		12/400
		18/500
		24/600
		36/800

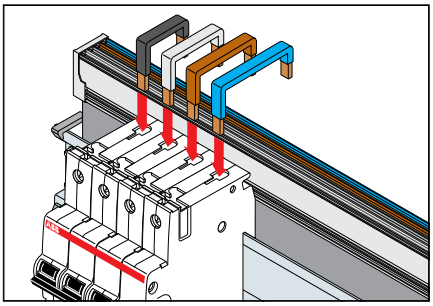

Connections (L1-L2-L3-N) for System Pro *M* modular apparatus.

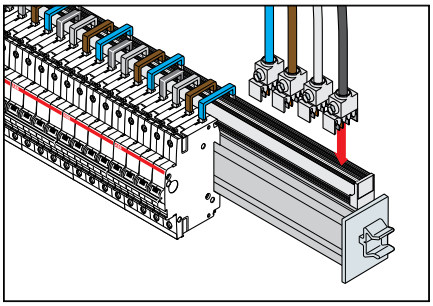

Power supply of the busbar with 100A feeder module without cable. Terminal capacity 35mm².

Circuit-breaker series	Unifix L
SN201 DS201	ED3272 L1/N 40A
	ED3280 L2/N 40A
	ED3298 L3/N 40A
S200 F200	ED3033 L1 100A
	ED3041 L2 100A
	ED3058 L3 100A
	ED3066 N 100A
F660-F670-S280 (80-100A) E200 - RS370	ED3132 Power supply L1/L2/L3/N - 350mm
	ED0026 Power supply L1/L2/L3/N - 1500mm
	ED0025 Power supply L1/L2/L3/N - 2500mm
MDRC - Various apparatus	ED3108 Power supply 2 cables L1/N 16A
	ED3116 Power supply 3 cables L1/L2/L3 16A
	ED3124 Power supply 4 cables L1/L2/L3/N 16A
	ED3355 APower supply 2 cables L1/N 40A
	ED3363 Power supply 3 cables L1/L2/L3 40A
	ED3371 Power supply 42 cables L1/L2/L3/N 71A

For the DDA locks, order the false module **ED2845** codes separately according to the size of the residual current lock

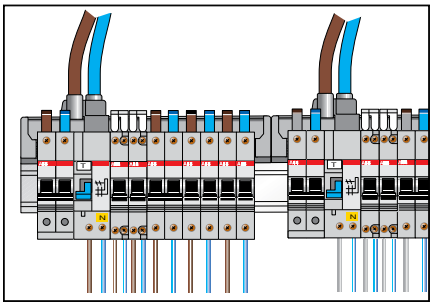

Direct power supply of the busbars by means of feeder module.

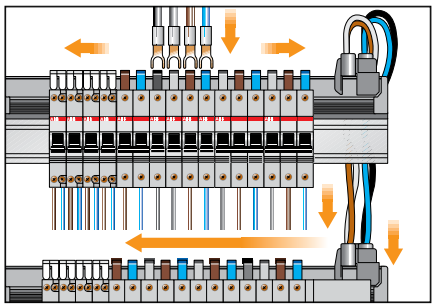

Power supply by means of modules and cables in parallel.

> Selection by components page 2/11 > In-depth technical information page 6/1 > Overall dimensions page 7/1

Gemini switchboards
Ordering codes

Structures

Boxes and doors

- Available in 6 sizes
- Single order code combined with box and transparent and opaque door
- Pack with door dismounted and wrapped separately
- Door designed so that it can be hooked onto hinges at both vertical sides and mounted without the use of tools
- To be mounted to the wall using internal holes or fixing brackets supplied as accessories
- Door opening at an angle of more than 180°
- RAL 7035 grey color
- Doors supplied with 2 standard double bit locks (3 for sizes 5 and 6) that can be replaced with locks for ciphered key or with square/triangular impression (the standard triplex key is suitable for use with three types of impressions).

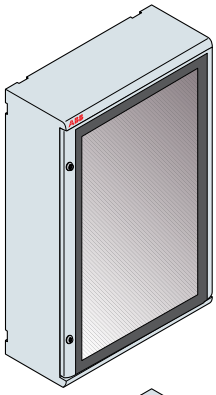

Structure with transparent door

Size	N° vertical mod. H=150mm	Useful dimensions WxHxD (mm)	Code			Package/ No. of pieces
1	2	250x300x180	1SL0211A00			1/1
2	3	375x450x230	1SL0212A00			1/1
3	4	375x600x230	1SL0213A00			1/1
4	4	500x600x230	1SL0214A00			1/1
5	5	500x750x330	1SL0215A00			1/1
6	6	750x900x330	1SL0216A00			1/1

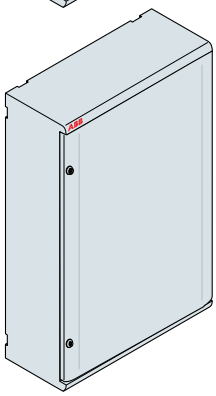

Structure with blind door

Size	N° vertical mod. H=150mm	Useful dimensions WxHxD (mm)	Code			Package/ No. of pieces
1	2	250x300x180	1SL0201A00			1/1
2	3	375x450x230	1SL0202A00			1/1
3	4	375x600x230	1SL0203A00			1/1
4	4	500x600x230	1SL0204A00			1/1
5	5	500x750x330	1SL0205A00			1/1
6	6	750x900x330	1SL0206A00			1/1

Single box

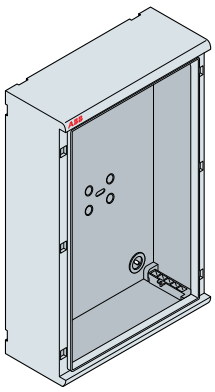

Size	N° vertical mod. H=150mm	Useful dimensions WxHxD (mm)	Code			Package/ No. of pieces
1	2	250x300x180	1SL0221A00			1/1
2	3	375x450x230	1SL0222A00			1/1
3	4	375x600x230	1SL0223A00			1/1
4	4	500x600x230	1SL0224A00			1/1
5	5	500x750x330	1SL0225A00			1/1
6	6	750x900x330	1SL0226A00			1/1

> Rapid selection table page 2/4 > In-depth technical information page 6/1 > Overall dimensions page 7/1

Gemini switchboards
Ordering codes

2

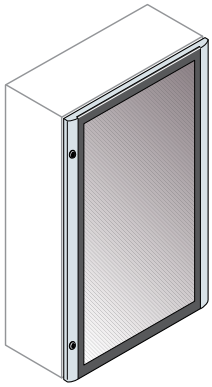

Structures

Frontal door

Transparent door

Size	N° vertical mod. H=150mm	Useful dimensions WxHxD (mm)	Code			Package/ No. of pieces
1	2	250x300x180	1SL0241A00			1/1
2	3	375x450x230	1SL0242A00			1/1
3	4	375x600x230	1SL0243A00			1/1
4	4	500x600x230	1SL0244A00			1/1
5	5	500x750x330	1SL0245A00			1/1
6	6	750x900x330	1SL0246A00			1/1

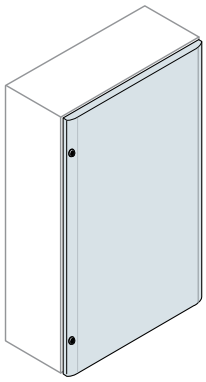

Opaque door

Size	N° vertical mod. H=150mm	Useful dimensions WxHxD (mm)	Code			Package/ No. of pieces
1	2	250x300x180	1SL0231A00			1/1
2	3	375x450x230	1SL0232A00			1/1
3	4	375x600x230	1SL0233A00			1/1
4	4	500x600x230	1SL0234A00			1/1
5	5	500x750x330	1SL0235A00			1/1
6	6	750x900x330	1SL0236A00			1/1

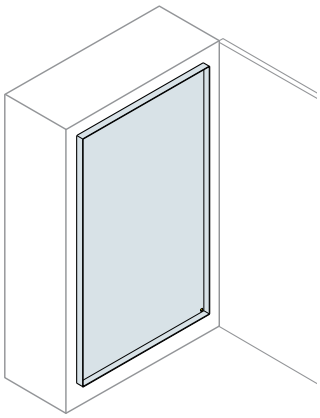

Inner doors

- Made in insulating material
- IP30 degree of protection with door open
- Designed so that door can be hinged onto both vertical sides
- Snap-on mounting and fixing

Inner doors

Size	N° vertical mod. H=150mm	Useful dimensions WxHxD (mm)	Code			Package/ No. of pieces
1	2	250x300x180	1SL0251A00			1/1
2	3	375x450x230	1SL0252A00			1/1
3	4	375x600x230	1SL0253A00			1/1
4	4	500x600x230	1SL0254A00			1/1
5	5	500x750x330	1SL0255A00			1/1
6	6	750x900x330	1SL0256A00			1/1

> Rapid selection table page 2/4 > In-depth technical information page 6/1 > Overall dimensions page 7/1

Completion of structure

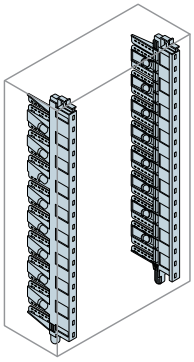

Uprights

- Incorporated vertical wiring duct (ABB patent)
- Snap-on mounting of all components (installation pitch of 75 mm)
- Snap-on insertion into box
- Depth of installed components adjusted at a pitch of 12.5 mm (4 positions for uprights of size 1 and 6 positions for the remaining ones)
- Ergonomic grip to make it easy to insert and extract

Upright with integrated wiring duct

Size	Useful dimensions H (mm)	Code			Package/ No. of pieces
1	300	1SL0283A00			1/4
2	450	1SL0284A00			1/4
3	600	1SL0285A00			1/4
4/5	750	1SL0286A00			1/4
6	900	1SL0287A00			1/4

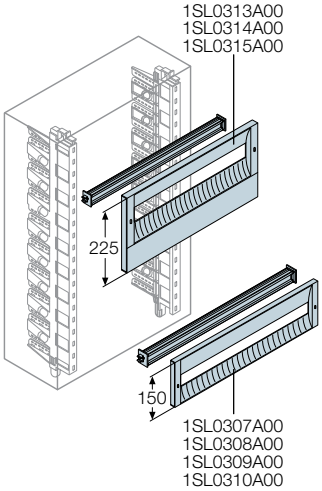

DIN rail kit

- Supplied with DIN rail complete with supports to snap onto uprights and adjustable in depth
- Available in 1 module (H 150 mm) and 1+1/2 module (H 225 mm, sizes 2-6) dimensions
- Designed to be hinged onto both vertical sides
- Snap-on mounting onto uprights (in compliance with reference Standards a tool must be used for removing the panel)
- Document pocket for storing descriptions of installed devices

Panel + DIN rail

Size	Dimensions W (mm)	Code			Package/ No. of pieces
1 module					
1	300	1SL0307A00			1/8
2/3	450	1SL0308A00			1/8
4/5	750	1SL0309A00			1/8
6	900	1SL0310A00			1/8
1+1/2 modules					
2/3	450	1SL0313A00			1/8
4/5	750	1SL0314A00			1/8
6	900	1SL0315A00			1/8

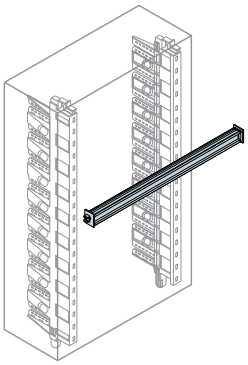

DIN rail

- Two-sided version
- Supplied with mounting supports that snap onto uprights
- Depth adjustment on uprights
- Designed so that rapid Unifix L mounting bars can be snapped on

DIN rail

Size	N° horiz. mod.	Dimensions W (mm)	Code			Package/ No. of pieces
1	12	210	1SL0290A00			1/10
2/3	18	318	1SL0291A00			1/10
4/5	24	443	1SL0292A00			1/10
6	36	663	1SL0293A00			1/10

> Rapid selection table page 2/4 > In-depth technical information page 6/1 > Overall dimensions page 7/1

Gemini switchboards
Ordering codes

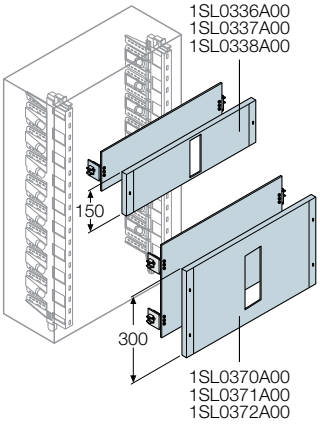

Completion of structure

Kit for installing Tmax moulded-case circuit breakers

- For installing Tmax moulded-case circuit breakers in fixed version with front terminals
- Composed of a plate with special drilled holes and a protection panel with vertical slots that can be hinged on both sides and snap-on mounted (in compliance with reference Standards a tool must be used for removing the panel)
- Available for sizes 2-6
- Version H 150 with drillings for Tmax T1 3 poles (with and without residual current releaser), Tmax T1 4 poles (with and without residual current releaser), Tmax T2 3 poles (with and without residual current releaser), Tmax T2 4 poles (without residual current releaser)
- Version H 300 with drillings for Tmax T2 4 poles (with residual current releaser), Tmax T3 3 poles (with and without residual current releaser), Tmax T3 4 poles (with and without residual current releaser)
- Snap-on mounting onto uprights with the possibility of adjusting the plate depth

Panel + plate					
Size	Dimensions W (mm)	Code			Package/ No. of pieces
1 module H=150mm					
2/3	375	1SL0336A00			1/4
4/5	500	1SL0337A00			1/4
6	700	1SL0338A00			1/2
2 modules H=300mm					
2/3	375	1SL0370A00			1/4
4/5	500	1SL0371A00			1/4
6	700	1SL0372A00			1/2

When choosing the correct kit, see table on page 2/8.

Kit for installing Tmax XT moulded-case circuit breakers

- For installing Tmax moulded-case circuit breakers in fixed version with front terminals
- Composed of a plate with special drilled holes and a protection panel with vertical slots that can be hinged on both sides and snap-on mounted (in compliance with reference Standards a tool must be used for removing the panel)
- Available for sizes 2-6
- Snap-on mounting onto uprights with the possibility of adjusting the plate depth

Panel + plate					
Size	Dimensions W (mm)	Code			Package/ No. of pieces
1 module H=150mm					
2/3	375	1SL0373A00			1/4
4/5	500	1SL0374A00			1/4
6	700	1SL0375A00			1/2
2 modules H=300mm					
2/3	375	1SL0376A00			1/4
4/5	500	1SL0377A00			1/4
6	700	1SL0378A00			1/2

> Rapid selection table page 2/4 > In-depth technical information page 6/1 > Overall dimensions page 7/1

Completion of structure

Partial modular plates

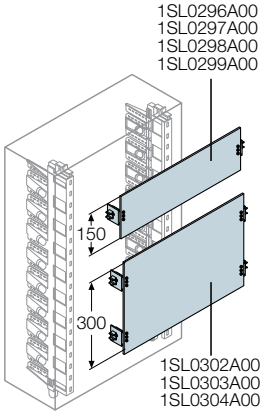

- Available in 1 module (H 150 mm) and 2 module (H 300 mm, sizes 2-6) dimensions
- Snap-on mounting onto uprights with depth adjustment

Partial modular plates

Size	Dimensions W (mm)	Code			Package/ No. of pieces
1 module H=150mm					
1	210	1SL0296A00			1/6
2/3	318	1SL0297A00			1/4
4/5	443	1SL0298A00			1/4
6	663	1SL0299A00			1/2
2 modules H=300mm					
2/3	318	1SL0302A00			1/4
4/5	443	1SL0303A00			1/4
6	663	1SL0304A00			1/2

Blank panels

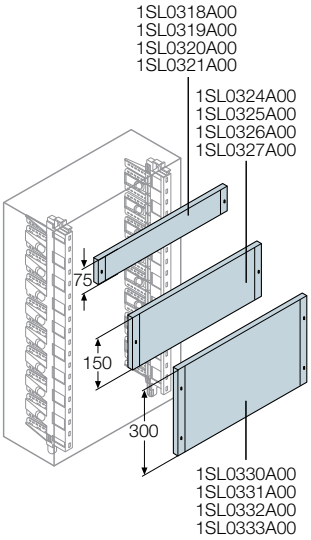

- Available in 1/2 module (H 75 mm), 1 module (H 150 mm) and 2 modules (H 300 mm) dimensions
- H 150 mm and H 300 panels designed to be hinged onto both vertical sides
- Snap-on mounting onto uprights (in compliance with reference Standards a tool must be used for removing the panel)

Blind front panels

Size	Dimensions W (mm)	Code			Package/ No. of pieces
1/2 module H=75mm					
1	250	1SL0318A00			1/10
2/3	375	1SL0319A00			1/10
4/5	500	1SL0320A00			1/6
6	700	1SL0321A00			1/4
1 module H=150mm					
1	250	1SL0324A00			1/8
2/3	375	1SL0325A00			1/8
4/5	500	1SL0326A00			1/4
6	700	1SL0327A00			1/4
2 modules H=200mm					
1	250	1SL0330A00			1/6
2/3	375	1SL0331A00			1/6
4/5	500	1SL0332A00			1/4
6	700	1SL0333A00			1/4

> Rapid selection table page 2/4 > In-depth technical information page 6/1 > Overall dimensions page 7/1

Completion of structure

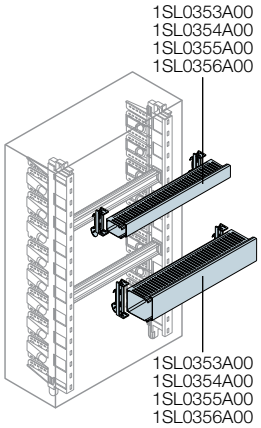

Wiring kit

- Composed of wiring duct in versions 25x60 mm and 40x60 mm (WxH, 8-12 mm slots) and Fix-O-Rapid device for the rapid snap-on hooking of the ducts on the DIN rail
- Snap-on mounting on uprights with depth adjustment

Wiring duct + Fix-O-Rapid					
Size	**Dimensions W (mm)**	**Code**			**Package/ No. of pieces**
Wiring 25x60mm					
1	250	1SL0353A00			1/4
2/3	375	1SL0354A00			1/4
4/5	500	1SL0355A00			1/4
6	700	1SL0356A00			1/4
Wiring 40x60mm					
1	250	1SL0360A00			1/4
2/3	375	1SL0361A00			1/4
4/5	500	1SL0362A00			1/4
6	700	1SL0363A00			1/4

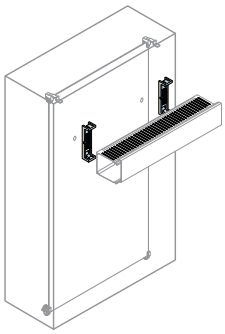

Fix-O-Rapid

Rapid mounting device for attaching wiring ducts to the base plate: it snaps onto the plate after drilling a ø 7 mm hole. Two Fix-O-Rapid devices are enough for each wiring duct section.
Fix-O-Rapid guarantees maximum insulation since it does not involve the use of any metal component inside the wiring duct.
If the wrong wiring duct is selected, it can be dismounted and a version with the same base and a different height can be attached to the Fix-O-Rapid.

Description	**Code**			**Package/ No. of pieces**
Rapid mounting device for wiring duct, W 25mm	05 270			20/600
Rapid mounting device for wiring duct, W 40mm	05 272			20/600
Rapid mounting device for wiring duct, W 60mm	05 274			20/600
Rapid mounting device for wiring duct, W 80mm	05 276			20/240
Rapid mounting device for wiring duct, W 100mm	05 278			20/240
Rapid mounting device for wiring duct, W 125mm	05 280			20/240
Rapid mounting device for wiring duct, W 150mm	05 282			20/240

> Rapid selection table page 2/4 > In-depth technical information page 6/1 > Overall dimensions page 7/1

Completion of structure

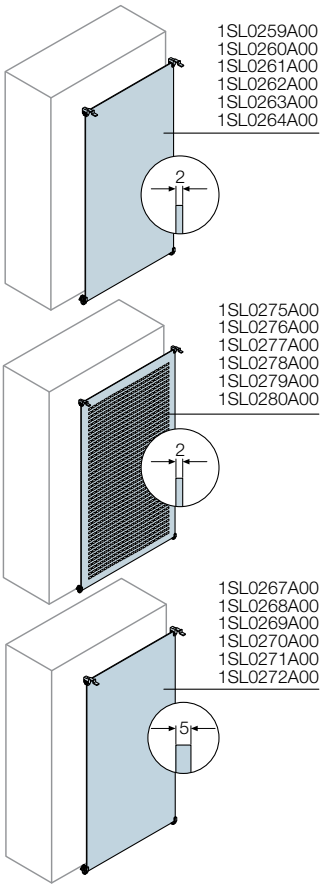

Base plates

- Available in three versions in blank or drilled metal and insulating material
- Positioning at 3 different depths for size 1, 4 different depths for sizes 2-3-4 and 7 different depths for sizes 5-6 (adjustments with 30 mm pitch)
- Supplied with feet and hooks adjustable at three further positions (with 7.5 mm pitch)
- Snap-on mounting
- Plates can also be mounted directly on the base with the special kit

Base plate

Size	Panel Dimensions WxHxD (mm)	Code			Package/ No. of pieces
In blank metal					
1	250x300x180	1SL0259A00			1/6
2	375x450x230	1SL0260A00			1/6
3	375x600x230	1SL0261A00			1/4
4	500x600x230	1SL0262A00			1/4
5	500x750x330	1SL0263A00			1/4
6	750x900x330	1SL0264A00			1/2
In drilled metal					
1	250x300x180	1SL0275A00			1/6
2	375x450x230	1SL0276A00			1/6
3	375x600x230	1SL0277A00			1/4
4	500x600x230	1SL0278A00			1/4
5	500x750x330	1SL0279A00			1/4
6	750x900x330	1SL0280A00			1/2
Insulating material					
1	250x300x180	1SL0267A00			1/6
2	375x450x230	1SL0268A00			1/6
3	375x600x230	1SL0269A00			1/4
4	500x600x230	1SL0270A00			1/4
5	500x750x330	1SL0271A00			1/4
6	750x900x330	1SL0272A00			1/2

Base mounting kit for metal plate

Description	Code			Package/ No. of pieces
Base mounting kit for metal plate	1SL0383A00			1/10

> Rapid selection table page 2/4 > In-depth technical information page 6/1 > Overall dimensions page 7/1

Gemini switchboards
Ordering codes

2

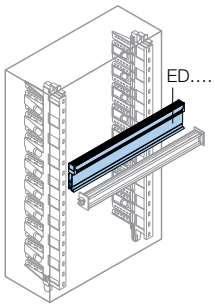

2 poles 4 poles

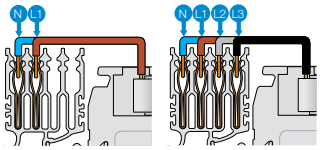

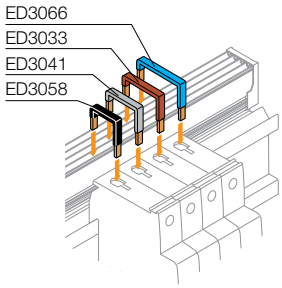

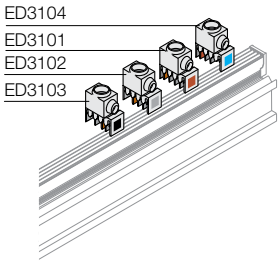

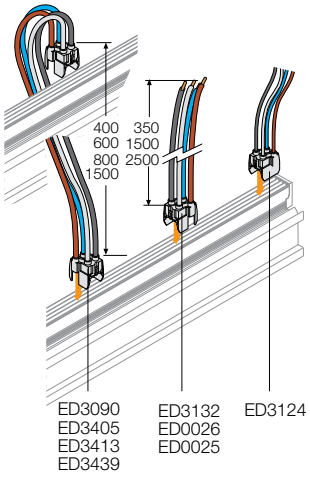

Distribution system

Unifix L

Description	Dimensions W (mm)	Code			Package/ No. of pieces
2-poles busbars					
100A 2P 8 module busbar	400	ED2993			1/6
100A 2P 12 module busbar	450	ED3009			1/6
100A 2P 18 module busbar	600	ED3017			1/6
100A 2P 24 module busbar	800	ED3025			1/6
100A 2P 36 module busbar					
100A 4P 12 module busbar	400	ED2944			1/6
100A 4P 18 module busbar	450	ED2951			1/6
100A 4P 24 module busbar	600	ED2969			1/6
100A 4P 36 module busbar	800	ED2977			1/6
Connections for various apparatus					
Connection with 2 conductors L/N 16A		ED3108			1/6
Connection with 3 conductors L1/L2/L3 16A		ED3116			1/6
Connection with 4 conductors L1/L2/L3/N 16A single phase		ED3124			1/6
Connection with 2 conductors L1/N 40A		ED3355			1/6
Connection with 3 conductors L1/L2/L3 40A		ED3363			1/6
Connection with 4 conductors L1/L2/L3/N 40A		ED3371			1/6
Connections for apparatus					
N°10 connections L1-N 40 A		ED3272			1/10
N°10 connections L2-N 40 A		ED3280			1/10
N°10 connections L3-N 40 A		ED3298			1/10
N°10 connections L 1 100A		ED3033			1/10
N°10 connections L 2 100A		ED3041			1/10
N°10 connections L 3 100A		ED3058			1/10
N°10 connections N 100A		ED3066			1/10
Feeder with 4P 100A cable (W=350mm)		ED3132			1/1
Feeder with 4P 100A cable (W=1500mm)		ED0026			1/1
Feeder with 4P 100A cable (W=1500mm)		ED0025			1/1
Power supply modules with cable					
Parallel module 2P 100A with cable (W=600mm)		ED3082			1/1
Parallel module 4P 100A with cable (W=400mm)		ED3405			1/1
Parallel module 4P 100A with cable (W=600mm)		ED3090			1/1
Parallel module 4P 100A with cable (W=800mm)		ED3413			1/1
Parallel module 4P 100A with cable (W=1500mm)		ED3439			1/1
Power supply modules without cable In 100A					
N°10 single-pole power supply terminals L1		ED3101			1/10
N°10 single-pole power supply terminals L2		ED3102			1/10
N°10 single-pole power supply terminals L3		ED3103			1/10
N°10 single-pole power supply terminals N		ED3104			1/10
Accessories					
N°10 busbar covers W=600mm		ED2961			1/10
N°2 busbar covers W=800mm		ED2962			1/2

> Rapid selection table page 2/4 > In-depth technical information page 6/1 > Overall dimensions page 7/1

Accessories

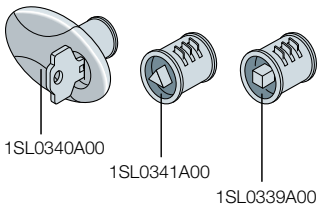

Locks

Available in three versions with ciphered key and handle, with triangular and square impressions

Description	Code			Package/ No. of pieces
Gemini standard lock	1SL0459A00			1/10
Lock with Yale type coded key and handle	1SL0340A00			1/10
Lock with triangular impression	1SL0341A00			1/10
Lock with square impression	1SL0339A00			1/10
Kit for vandalproof closure	1SL0458A00			1/10

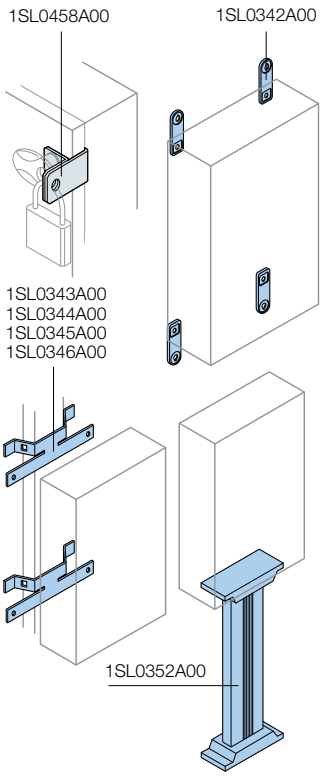

Mounting elements

Guarantee optimum wall, pole and floor mounting conditions

Description	Code			Package/ No. of pieces
Plastic brackets (4 pieces) for horizontal and vertical wall mounting (1)	1SL0342A00			1/10
Metal brackets (4 pieces) for horizontal and vertical wall mounting	1SL0401A00			1/10
Pole mounting kit for sizes 1 switchboards	1SL0343A00			1/4
Pole mounting kit for sizes 2-3 switchboards	1SL0344A00			1/4
Pole mounting kit for sizes 4-5 switchboards	1SL0345A00			1/2
Pole mounting kit for size 6 switchboards	1SL0346A00			1/2
Floor mounting pedestal for sizes 1-4	1SL0352A00			1/1

(1) Types of inserts are provided to adapt the ø 6 and 8 mm fixing brackets
(1) The kit consists of 2 elements for mounting in the upper and lower parts of the switchboard.

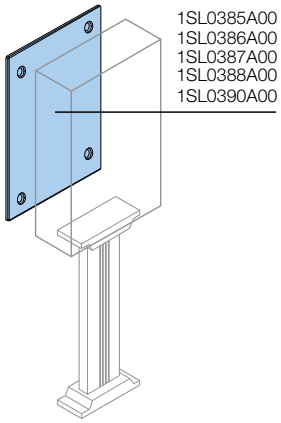

Base cover

For aesthetic as well as functional purposes, in particular for pedestal installations

Size	Description	Code			Package/ No. of pieces
1	Back plugging plate	1SL0385A00			1/4
2	Back plugging plate	1SL0386A00			1/4
3	Back plugging plate	1SL0387A00			1/2
4	Back plugging plate	1SL0388A00			1/2
5	Back plugging plate	1SL0389A00			1/2
6	Back plugging plate	1SL0390A00			1/2

> Rapid selection table page 2/4 > In-depth technical information page 6/1 > Overall dimensions page 7/1

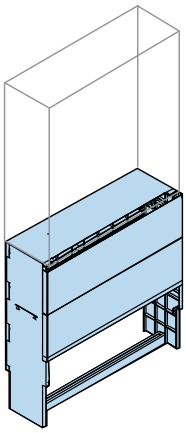

Accessories

Pedestal

This enables the Gemini switchboard to be secured to the ground without the need to build plinths or foundations in cement since it is the pedestal that is buried.

Size	Description	Code			Package/ No. of pieces
4	Gemini Pedestal size 4	1SL0464A00			1/1
5	Gemini Pedestal size 5	1SL0465A00			1/1
6	Gemini Pedestal size 6	1SL0466A00			1/1

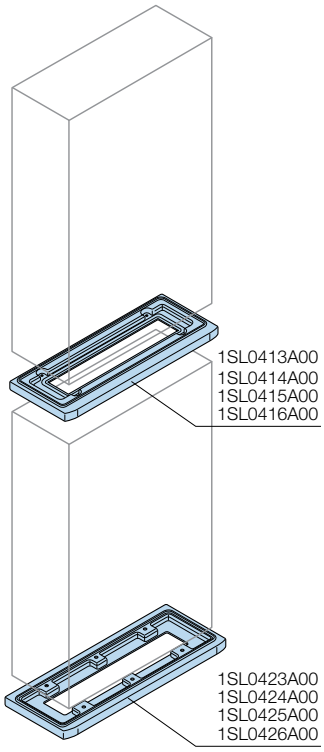

Coupling kit

Follows the aesthetic outline of the boxes. On request, contact ABB for minimum order quantities.

Size	Description	Code			Package/ No. of pieces
2/3	Vertical coupling kit for sizes	1SL0413A00			1/2
4	Vertical coupling kit for sizes	1SL0414A00			1/2
5	Vertical coupling kit for sizes	1SL0415A00			1/2
6	Vertical coupling kit for sizes	1SL0416A00			1/2

Bottom base H 30

For fixing the Gemini switchboard directly to the floor

Size	Description	Code			Package/ No. of pieces
2/3	Bottom base	1SL0423A00			1/2
4	Bottom base	1SL0424A00			1/2
5	Bottom base	1SL0425A00			1/2
6	Bottom base	1SL0426A00			1/2

> Rapid selection table page 2/4 > In-depth technical information page 6/1 > Overall dimensions page 7/1

Accessories

Fixed frame

In combination with bottom base H 30. For fixing onto poured concrete floors and bases.

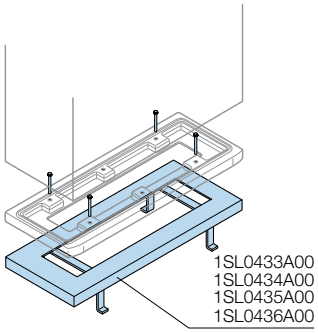

Size	Description	Code			Package/ No. of pieces
2/3	Frame for fixing to floor	1SL0433A00			1/2
4	Frame for fixing to floor	1SL0434A00			1/2
5	Frame for fixing to floor	1SL0435A00			1/2
6	Frame for fixing to floor	1SL0436A00			1/2

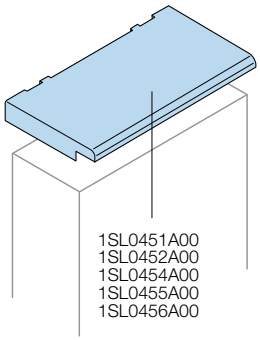

Full covers

Description	Code			Package/ No. of pieces
Full cover for size 1 switchboards	1SL0451A00			1/1
Full cover for size 2-3 switchboards	1SL0452A00			1/1
Full cover for size 4 switchboards	1SL0454A00			1/1
Full cover for size 5 switchboards	1SL0455A00			1/1
Full cover for size 6 switchboards	1SL0456A00			1/1

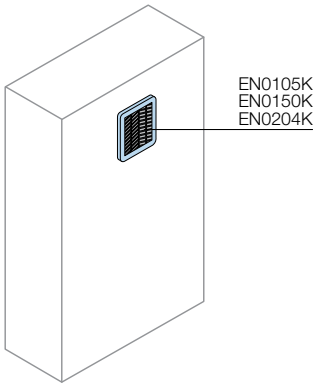

Ventilation kit IP21/54

- Composed of plastic grilles (ABS self-extinguishing UL94V0) and filter
- Degree of protection without filter IP21
- Degree of protection with filter IP54
- Equipped with pre-mounted gasket

Description	Dimensions WxW (mm)	Code			Package/ No. of pieces
Grille + air filter kit	105x105	EN0105K			1/1
Grille + air filter kit (cannot be used with Size 1	150x150	EN0150K			1/1
Grille + air filter kit (cannot be used with Size 1	204x204	EN0204K			1/1

Screws not included, use 4 self-tapping screws 2.9x13 or order Code 1SL0384A00

> Rapid selection table page 2/4 > In-depth technical information page 6/1 > Overall dimensions page 7/1

Accessories

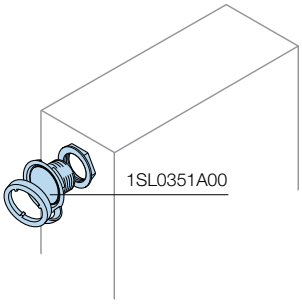

Anti-condensation kit

- Kit made of special material to prevent condensation from forming inside the switchboard: it includes GORE™ MEMBRANE VENTING
- Impermeable to water (pressure): 0.6 bar/60 sec.
- Air flow: 400 ml/min. (dp = 70 mbar)
- 1 kit for sizes 1-2, 2 kits for sizes 3-4 and 3 kits for sizes 5-6 are recommended to guarantee adequate dissipation. In any case the number of kits to be installed depends on the number and type of devices installed inside the switchboard.

Description	Code			Package/ No. of pieces
Anti-condensation kit	1SL0351A00			1/6

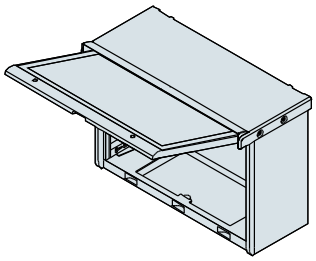

Horizontal Gemini kit

Kit to use for opening switchboard upwards in correct manner.

Description	Code			Package/ No. of pieces
Horizontal Gemini Kit size 2	1SL0470A00			1/1
Horizontal Gemini Kit size 3/4	1SL0471A00			1/1
Horizontal Gemini Kit size 5	1SL0472A00			1/1
Horizontal Gemini Kit size 6	1SL0473A00			1/1

Other accessories

Description	Code			Package/ No. of pieces
Universal drill bit	12 849			1/30
Module covers in grey RAL 7035, 4 modules	12 863			25/300
Deep adapters	12 851			10/80
Small bag containing base plates	1SL0380A00			1/10
Small bag containing DIN supports	1SL0381A00			1/10
Small bag containing partial plate	1SL0382A00			1/10
Small bag containing screws and inserts	1SL0397A00			1/10
Small bag containing ventilation kit fastening screws	1SL0384A00			10/50
Spare spanner	1SL0457A00			1/10

> Rapid selection table page 2/4 > In-depth technical information page 6/1 > Overall dimensions page 7/1

Gemini switchboards
Examples of configurations

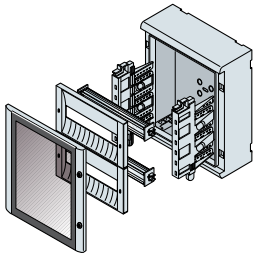

Gemini switchboards 12 mod. DIN dim.300x250x180 (400x335x210) mm (external hxwxd) IP66

Description	Code			Q.ty
Box + transparent door	1SL0211A00			1
No. 2 uprights	1SL0283A00			1
DIN rail kit (DIN rail + panel) H=150mm	1SL0307A00			2

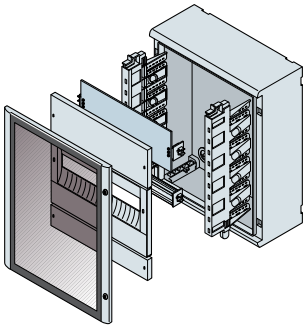

Gemini switchboards 18 mod. DIN dim.450x375x230 (550x460x260) mm (external hxwxd) IP66

Description	Code	Articolo	Prezzo EUR	Q.ty
Box + transparent door	1SL0212A00			1
No. 2 uprights	1SL0284A00			1
Modular plate 1 mod.DIN H=150mm	1SL0297A00			1
Blank panel 1 mod.DIN H=150mm	1SL0325A00			1
DIN rail kit (DIN rail+panel) 1+1/2 mod. H=225mm	1SL0313A00			1
Blank panel 1/2 mod. H=75mm	1SL0319A00			1
Module covers	12863			1

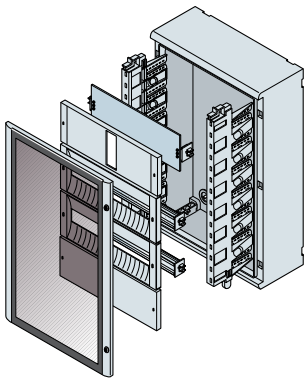

Gemini switchboards 18 mod. DIN dim.600x375x230 (700x460x260) mm (external hxwxd) IP66

Description	Code	Articolo	Prezzo EUR	Q.ty
Box + transparent door	1SL0213A00			1
No. 2 uprights	1SL0285A00			1
Kit for Tmax H=150mm	1SL0336A00			1
DIN rail kit (DIN rail + panel) 1 mod. H=150mm	1SL0308A00			2
DIN rail	1SL0291A00			1
Blank panel 1 mod. DIN H=150mm	1SL0325A00			1

> Rapid selection table page 2/4 > In-depth technical information page 6/1 > Overall dimensions page 7/1

Gemini switchboards
Examples of configurations

2

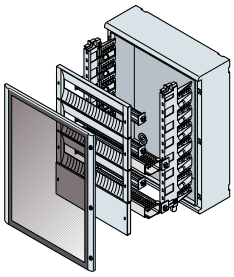

Gemini switchboards 24 mod. DIN dim.600x500x230 (700x590x260) mm (external hxwxd) IP66

Description	Code			Q.ty
Box + transparent door	1SL0214A00			1
No. 2 uprights	1SL0285A00			1
DIN rail kit (DIN rail+panel) 1 mod. H=150mm	1SL0309A00			3
Blank panel 1 mod. H=150mm	1SL0326A00			1
Wiring kit (Fix-O-rapid+wiring duct 25x60mm)	1SL0355A00			2
DIN rail	1SL0292A00			1
Module covers	12863			1

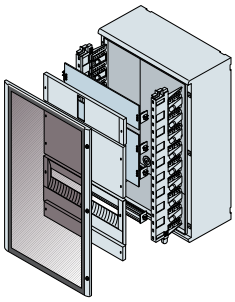

Gemini switchboards 24 mod. DIN dim.750x500x330 (855x590x360) mm (external hxwxd) IP66

Description	Code			Q.ty
Box + transparent door	1SL0215A00			1
No. 2 uprights	1SL0286A00			1
Kit for Tmax H=150mm	1SL0337A00			1
Modular plate H=300mm	1SL0303A00			1
Blank panel H=300mm	1SL0332A00			1
DIN rail kit (DIN rail+panel) 1+1/2 mod. H=225mm	1SL0314A00			1
Front blind panel 1/2 mod. H=75mm	1SL0320A00			1
Module covers	12863			1

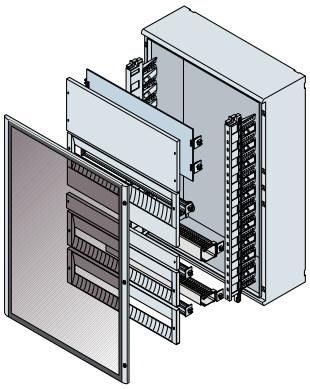

Gemini switchboard 36 mod. DIN dim.900x750x330 (1005x840x360) mm (external hxwxd) IP66

Description	Code			Q.ty
Box + transparent door	1SL0216A00			1
No. 2 uprights	1SL0287A00			1
Modular plate H=300mm	1SL0304A00			1
Blank panel H=300mm	1SL0333A00			1
DIN rail kit (DIN rail + panel) 1+1/2 mod. H=225mm	1SL0315A00			1
Blank panel 1/2 mod. H=75mm	1SL0321A00			1
DIN rail kit (DIN rail+panel) 1 mod. H=150mm	1SL0310A00			2
Wiring kit (Fix-O-rapid+wiring duct 25x60mm)	1SL0356A00			1
Wiring kit (Fix-O-rapid+wiring duct 40x60mm)	1SL0363A00			1

> Rapid selection table page 2/4 > In-depth technical information page 6/1 > Overall dimensions page 7/1

ArTu L modular structures

General 3/2
Selection of the structure 3/4
Kit for installing apparatus 3/6
Distribution systems 3/13
Ordering codes 3/22
Examples of configurations 3/50

3

ArTu L modular structures
General

3

The ArTu L range is composed of structures consisting of modular kits which can be built up in different combinations able to cover applications of terminal distribution switchgear, both wall-mounted up to 400 A and floor-standing up to 800 A.

The overall dimensions are reduced thanks to the depth of just 200 mm for the former and 240 mm for the latter. Both versions can be placed side-by-side with other structures and with cable risers with a width of 300 mm.
Modular apparatus of the System pro M series, moulded-case * T series up to T6 800 A, XT series up to XT4, (fixed version with front terminals) circuit-breakers are housed inside the ArTu L switchgear, with a capacity of 24 or 36 modules per row.

Apart from in the traditional plain and pre-drilled versions with 200 mm height, the modular panels are also available in the 150 mm height, which allows optimisation of the space available.
Cabling becomes simpler, thanks to the structure which is completely open: in fact, it is possible to conveniently carry out cabling horizontally on trestles inside the workshop or on the building site with the switchgear completely open and then only complete its assembly when cabling has been completed.

It is possible to use the rapid Unifix (H and L) cabling system. Furthermore, the kit for fixing the circuit-breakers further simplifies the job, thanks to the practical rapid snap-on hooking up system and the standardised small items.

The 400 and 800A busbar system with shaped section, with prefabricated connections between circuit-breakers and busbars placed in the various situations can be used. It is always possible to use the traditional flat busbars for capacities up to 630A.

The degree of protection goes from IP31, for the versions without door, up to IP43 for the versions with door.
Lateral access is guaranteed, as is the possibility of mounting the vertical wiring duct both on the right, on the left and horizontally.

An accessory box is available, to be placed above the switchgear roof, which increases the space available for the incoming cables and, together with the distribution frame, makes distribution simpler. The maximum form of segregation, which can be obtained, is type 2.

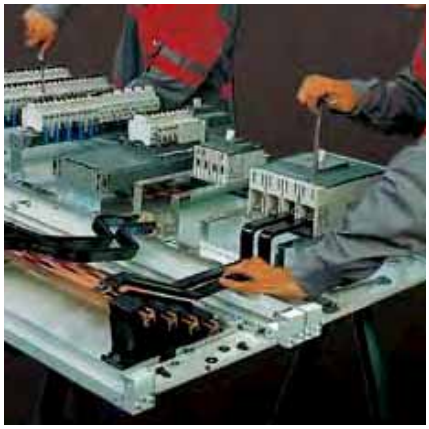

Wiring becomes easier thanks to the completely open structure, and it is in fact possible to wire without problems horizontally on trestles.

A system of busbars of 400 and 800A with shaped section can be used with prefabricated connections between circuit-breakers and busbars placed in the different situations.

Technical characteristics

	Wall-mounted D=204mm	Floor-standing D=240mm
Compliance with Standards	CEI EN 60439-1/IEC 61439-1-2	CEI EN 60439-1/IEC 61439-1-2
Rated service voltage Ue	up to 690 V	up to 690 V
Rated insulation voltage Ui	up to 1000 V	up to 1000 V
Rated frequency	50-60 Hz	50-60 Hz
Rated impulse withstand voltage Uimp	6 kV	8 kV
Rated current In	up to 400 A	up to 800 A
Rated short-time short-circuit withstand current Icw	up to 25 kA	up to 35 kA
peak current Ipk	up to 52.5 kA	up to 74 kA
Degree of protection IP	31 without door	31 without door
	43 with door	43 with door

ArTu L modular structures
Selection of the structure

Selection of the structure

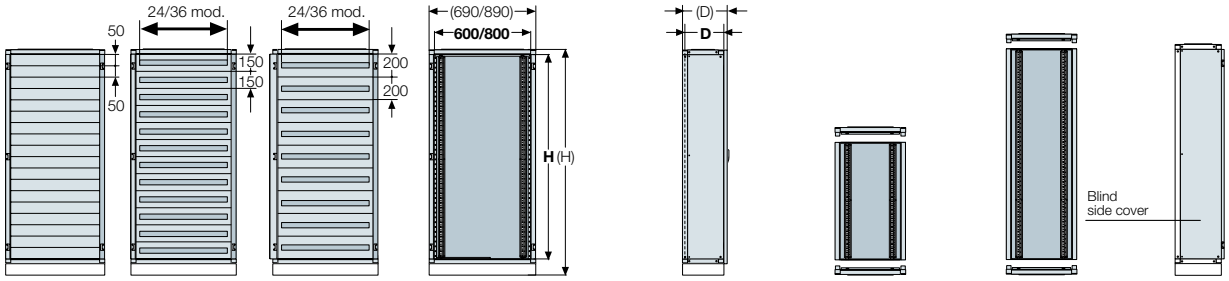

Structures

No. vert. mod. H=100mm	No. installable DIN modules	No. installable DIN modules	External overall dimensions [1]			Functional dimensions [2]			Wall-mounted back of structure [3]	Floor-standing back of structure	Side cover
	DIN panel 24/36 modules H=150mm	DIN panel 24/36 modules H=200mm	(H) mm	(W) mm	(D) mm	H mm	W mm	D [4] mm	Including roof and base	Including roof and base	Blind
6	96 (24x4)	72 (24x3)	650			600			SL0600		MC0600
8	120 (24x5)	96 (24x4)	850			800			SL0800		MC0800
10	144 (24x6)	120 (24x5)	1050	690	204	1000	600	165	SL1000		MC1000
12	192 (24x8)	144 (24x6)	1250			1200			SL1200		MC1200
14	216 (24x9)	168 (24x7)	1550			1400				SL1400	MC1400
16	240 (24x10)	192 (24x8)	1750			1600				SL1600	MC1600
18	288 (24x12)	216 (24x9)	1950	690	240	1800	600	195		SL1800	MC1800
20	312 (24x13)	240 (24x10)	2150			2000				SL2000	MC2000
14	324 (36x9)	252 (36x7)	1550			1400				SL1408	MC1400
16	360 (36x10)	288 (36x8)	1750			1600				SL1608	MC1600
18	432 (36x12)	324 (36x9)	1950	890	240	1800	800	195		SL1808	MC1800
20	468 (36x13)	360 (36x10)	2150			2000				SL2008	MC2000

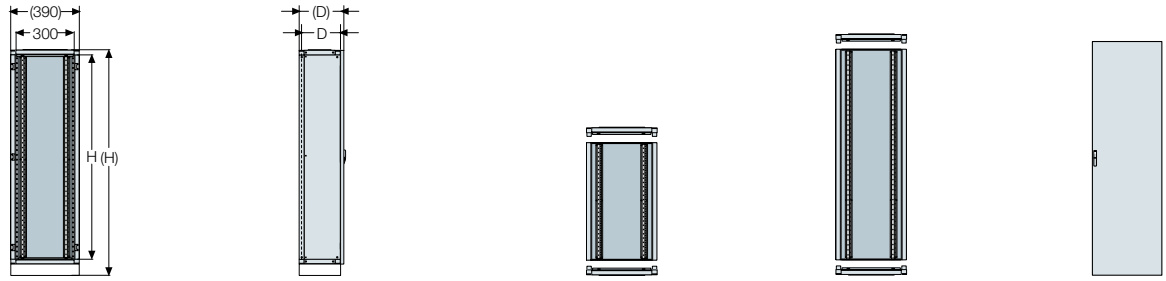

Additional cable container

External overall dimensions [1]			Functional dimensions [2]			Wall-mounted cable container [3]	Floor-mounted cable container	Front door IP43
(H) mm	(W) mm	(D) mm	H mm	W mm	D [4] mm	Including roof and base	Including roof and base	Plain door
650	390	204	600	300	165	VC0600		PC0602
850			800			VC0800		PC0802
1050			1000			VC1000		PC1002
1250			1200			VC1200		PC1202
1550	390	240	1400	300	195		VC1400	PC1402
1750			1600				VC1600	PC1602
1950			1800				VC1800	PC1802
2150			2000				VC2000	PC2002

> Selection by components page 3/22 > In-depth technical information page 6/1 > Overall dimensions page 7/1

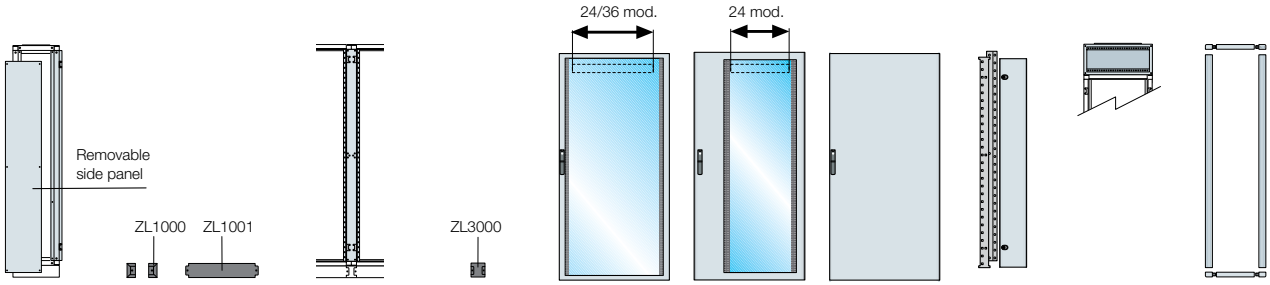

	Side cover	Base strip		Intermediate uprights	Base strip	IP43 front doors			Internal cable container	Connection box	IP31 Finishing section
	With removable panel	Angles	Flanges	For side-by-side positioning	Angle for side-by-side structures	Glass door 24/36 mod.	Glass door 24 mod. + int cable container	Blind door 24/36 mod.		Roof	
				MI0600		PV0600		PC0601			See page 3/28
				MI0800		PV0800		PC0801			
				MI1000		PV1000		PC1001			
				MI1200		PV1200		PC1201			
	LF1400	ZL1000	ZL1001	MI1400	ZL3000	PV1400		PC1401		RC1000	
	LF1600			MI1600		PV1600		PC1601			
	LF1800			MI1800		PV1800		PC1801			
	LF2000			MI2000		PV2000		PC2001			
	LF1400	ZL1000	ZL1101	MI1400	ZL3000	PV1436	PV1424	PC1436	VC1425		
	LF1600			MI1600		PV1636	PV1624	PC1636	VC1625		
	LF1800			MI1800		PV1836	PV1824	PC1836	VC1825		
	LF2000			MI2000		PV2036	PV2024	PC2035	VC2025		

	Internal doors	Base strip		Connection box	Finishing section IP31
	Plain door	Angles	Flanges	Roof	
					See page 3/28
	PO1431	ZL1000	ZL2001	RC2000	
	PO1631				
	PO1831				
	PO2031				

(1) The external overall dimensions of floor-mounted ArTu L switchgear include the palletisable base strip h=100mm (angle and flanges to be ordered separately).

(2) The functional dimensions represent the useful space for installing the apparatus.

(3) The wall-mounted structures cannot be superimposed.

(4) In this catalogue, reference is always made to the 204/240mm depth corresponding respectively to the overall dimensions with front door. The useful dimensions between panel and back of the structure are 165/195mm.

> Selection by components page 3/22 > In-depth technical information page 6/1 > Overall dimensions page 7/1

ArTu L modular structures
Selection of the structure

Recommended solutions for installation of the apparatus

Apparatus		Type of structure/Installation						
		Wall structures			Floor structures			Connection box
		Vertical on DIN rail	Vertical	Horizontal	Vertical on DIN rail	Vertical	Vertical	Horizontal
Pro *M* System modular apparatus		■			■			
OT						■	■	
OESA						■		
OETL						■		
Tmax T1 3/4 poles - fixed / front terminals		■	■	■	■	(■)	■	
Tmax T1 4 poles - fixed / front terminals + RC mod.		■		■	■	(■)	■	
Tmax T2 3/4 poles - fixed / front terminals		■	■	■	■	(■)	■	
Tmax T2 4 poles - fixed / front terminals + RC mod.		■		■	■	(■)	■	
Tmax T3 3/4 poles - fixed / front terminals		■	(■)	■	■	(■)	■	
Tmax T3 4 poles - fixed / front terminals + RC mod.			■	■		(▲)		
Tmax T3 3/4 poles - fixed / front terminals + divider							■	
Tmax T4 3/4 poles - fixed / front terminals			■	■		(■)	■	
Tmax T4 4 poles - fixed / front terminals + RC mod.			■	■		■	■	
Tmax T5 3/4 poles - fixed / front terminals			■	■		(■)	■	
Tmax T5 4 poles - fixed / front terminals + RC mod.			■	■		(■)	■	
Tmax T6 3/4 poles - fixed / front terminals						■		
Side-by-side Tmax kits						■		
Tmax XT1 3/4 poles - fxed / front terminals		■	■	■	■	(■)	■	
Tmax XT1 4 poles - fxed / front terminals + RC mod.			■	■		(■)	■	
Tmax XT2 3/4 poles - fxed / front terminals				■			■	
Tmax XT2 4 poles - fxed / front terminals + RC mod.				■			■	
Tmax XT3 3/4 poles - fxed / front terminals		■	(■)	■	■	(■)	■	
Tmax XT3 4 poles - fxed / front terminals + RC mod.		■	■	■	■	(■)	■	
Tmax XT4 3/4 poles - fxed / front terminals			■	■		(■)	■	
Tmax XT4 4 poles - fxed / front terminals + RC mod.			■	■		■	■	
Side-by-side Tmax XT kits			■			■		
Busbars with shaped section	Linear busbar holder		(■)			(■)		■
	Scaled busbar holder					(▲)		■
Flat busbar	Linear busbar holder		(■)			(■)		■
	Scaled busbar holder			■		(▲)		■
Unifix L							■	
Unifix H							■	

(■) Can also be installed in the additional cable container.

(▲) Can only be installed in the additional cable container.

> Selection by components page 3/22 > In-depth technical information page 6/1 > Overall dimensions page 7/1

ArTu L modular structures
Kit for installing apparatus

Kit for System Pro M, ≤160 OT modular apparatus, Tmax T1-T2-T3, XT1 and XT3, and supports for Unifix H

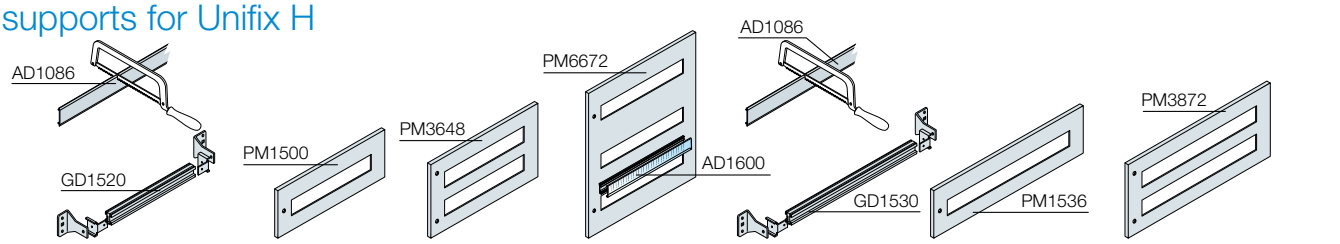

	W=300mm				W=600mm			W=800mm		
H (mm)	DIN rail kit 12 mod.DIN		Panel 1 DIN row 12 mod.DIN	DIN rail kit 24 mod.DIN	Panel 1 DIN row 24 mod.DIN	Panel 2 DIN row 48 mod.DIN	Panel 3 DIN row 72 mod.DIN	DIN rail kit 36 mod.DIN	Panel 1 DIN row 36 mod.DIN	Panel 2 DIN row 72 mod.DIN
Standard alluminium version										
	Floor	Wall								
150 (1)				GD1520	PM1500			GD1530	PM1536	
200	GD1512	GD1515	PM2612	GD1520	PM2624			GD1530	PM2836	
300 (2)				GD1520	PM2312			GD1530	PM2315	
300				2x GD1520		PM3648 (1)		2x GD1530		PM3872 (1)
600				3x GD1520			PM6672			
Unifix H fixing brackets										
300				AD1097	PM3624			AD1097	PM3836	

(1) Only for modular System Pro M

(2) Version for Tmax with differential module underplaced RC 221/222.

Completion items for installation on DIN rail

Screw fixing of ducts up to 100x100mm.

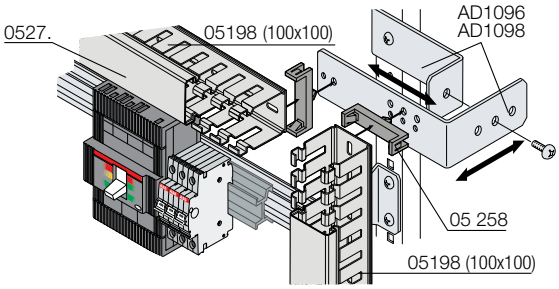

Fixing with rapid hooking base of ducts up to 100x100mm.

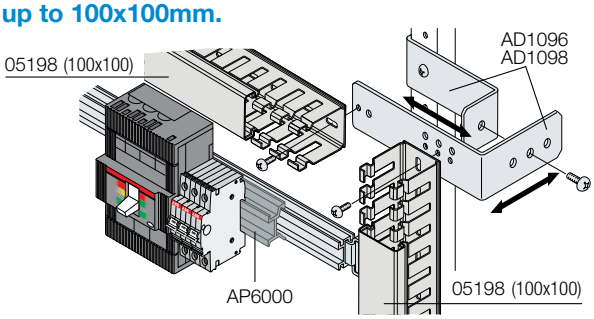

DIN cut-out hole covers

Code	Description
AD1086	Hole covering strip DIN W=2000mm - grey RAL 7035
AD1088	Hole covering strip DIN 24 modules - grey RAL 7035
AD1089	Hole covering strip DIN 36 modules - grey RAL 7035

Supports for horizontal wiring duct

Allows assembly of the cabling wiring duct horizontally and vertically up to 100x100mm (in the case of installation in floor-mounted structure with removable side panel LF.... the vertical wiring duct has maximum dimensions of 100x80mm hxw). The support AD1098 has compensation drillings as the height and width of the wiring duct varies. The accessory is also prepared with ø7mm holes for assembly of the ABB wiring duct by means of the Fix-O-rapid hook.

Code	Description
AD1096	Support for horizontal/vertical wall-mounted wiring duct
AD1098	Support for horizontal/vertical floor-mounted wiring duct

Depth adapter

Code	Description
AP6000	Depth adapter W=600mm for side-by-side Pro M - Tmax T1-T2-T3-XT1- XT3

Polished flange for Tmax XT2-XT4 positioned side by side on plate

Code	Description
AD3310	AD3310 Polished flange for plate-mounted XT2 3P
AD3311	AD3311 Polished flange for plate-mounted XT2 4P
AD3312	AD3312 Polished flange for plate-mounted XT4 3P
AD3313	AD3313 Polished flange for plate-mounted XT4 4P

Tmax XT2-XT4 on DIN rail cannot be mounted in ArTu switchboards.

> Selection by components page 3/22 > In-depth technical information page 6/1 > Overall dimensions page 7/1

ArTu L modular structures
Kit for installing apparatus

Horizontal installation

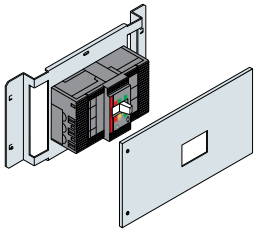

3

Circuit-breaker front terminals	No. poles	Dimensions H (mm)	Fixed		
			Wall-mounted structures	Floor-mounted structures	
			Structure 24 DIN mod. W=600mm	Structure 24 DIN mod. W=600mm	Structure 36 DIN mod. W=800mm
Tmax T1	3-4	200	LK1000	LK1000	LK1100
Tmax T1 CB + RC mod.	4	200	LK1004 [1]	LK1004 [1]	LK1104 [1]
Tmax T2	3-4	200	LK2000	LK2000	LK2100
Tmax T2 CB + RC mod.	4	200	LK2004	LK2004	LK2104
Tmax T3	3-4	200	LK3000	LK3000	LK3110
Tmax T3 CB + RC mod.	4	300	LK3004	LK3004	LK3104
Tmax T3 CB + distr. frame	3-4	200		LK3301	
Tmax T4	3-4	200	LK4003	LK4003	LK4103
Tmax T4 CB + RC mod.	4	200	LK4004	LK4004	LK4104
Tmax T5	3-4	300	LK5003	LK5003	LK5103
Tmax T5 CB + RC mod.	4	300	LK5004	LK5004	LK5104
Tmax XT1	3[2]/4	200	LX1000	LX1000	LX1100
Tmax XT1 CB + RC mod.	4	200	LX1005	LX1005	LX1104
Tmax XT2	3[2]/4	200	LX2000	LX2000	
Tmax XT2 CB + RC mod.	4	200	LX2004	LX2004	
Tmax XT3	3[2]/4	200	LX3000	LX3000	LX3110
Tmax XT3 CB + RC mod.	4	300	LX3004	LX3004	LX3104
Tmax XT4	3[2]/4	200	LX4003	LX4003	
Tmax XT4 CB + RC mod.	4	200	LX4004	LX4004	

[1] Version for Tmax with differential module underplaced RC 221/222.

[2] For 3 poles breakers please order accessory flange codes: AD3305 XT1 3P Flange for plate-mounting - AD3306 XT2 3P Flange for plate-mounting - AD3307 XT3 3P Flange for plate-mounting - AD3308 XT4 3P Flange for plate-mounting.

> Selection by components page 3/22 > In-depth technical information page 6/1 > Overall dimensions page 7/1

Vertical installation

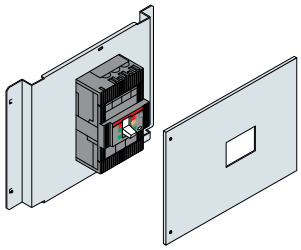

Circuit-breaker front terminals	No. poles	Dimensions H (mm)	Fixed				
			Wall-mounted structures		Floor-mounted structures		
			Structure 24 DIN mod. W=600mm	Cable container side by side W=300mm	Structure 24 DIN mod. W=600mm	Structure 36 DIN mod. W=800mm	Cable container side by side W=300mm
Tmax T1-T2-T3-XT1-XT3 on DIN ral		200	(see page 3/6)		(vedere pag. 3/6)	(vedere pag. 3/6)	(vedere pag. 3/6)
Tmax T1	3-4	200	LK1001		LK1001	LK1101	LK1002
Tmax T1 CB+RC mod.	4	300					LK1008 (1)
Tmax T1 No.4 CBs side by side	3-4	200	LK4100		LK4100	LK4108*	
Tmax T2 No.3 CBs side by side	3	200	LK2001		LK2001	LK2101	LK2002
Tmax T2 CB+RC mod.	4	300					LK2008
Tmax T2 No.4 CBs side by side	3-4	200	LK3200		LK3200	LK3111**	
Tmax T3	3-4	300	LK3001	LK3003	LK3001	LK3101	LK3002
Tmax T3 CB+RC mod.	4	300	LK3005		LK3005	LK3105	LK3008
Tmax T3 No.3 CBs side by side	3-4	300	LK3300		LK3300	LK3102**	
Tmax T4	3-4	400	LK4005		LK4005	LK4105	LK4007
Tmax T4 CB+RC mod.	4	500	LK4006		LK4006	LK4106	
Tmax T5	3-4	400	LK5005		LK5005	LK5105	LK5007
Tmax T5 CB+RC mod.	4	500	LK5006		LK5006	LK5106	LK5008
Tmax T6	3-4	500			LK6011	LK6012	
Tmax XT1	3(2)-4	200	LX1001		LX1001	LX1101	LX1002
Tmax XT1 CB+RC mod.	4	300	LX1006		LX1006	LX1108	LX1008
Tmax XT1 No.3 CBs side by side	3(2)-4	200	LX4100		LX4100		
Tmax XT2	3-4	200	LX2001		LX2001	LX2101	
Tmax XT2	3-4	300		LX2300			LX2002
Tmax XT2 CB+RC mod.	4	300					LX2008
Tmax XT2 No.3/4(3) CBs s by s	3-4(4)	200	LX3200		LX3200		
Tmax XT3	3(2)-4	300	LX3001	LX3003	LX3001	LX3101	LX3002
Tmax XT3 CB+RC mod.	4	300	LX3005		LX3005	LX3105	LX3008
Tmax XT3 No.2 CBs side by side	3(2)-4	300	LX3300		LX3300		
Tmax XT4	3(2)-4	300	LX4005		LX4005		LX4007
Tmax XT4 CB+RC mod.	4	400	LX4006		LX4006		
Tmax XT4 No. 3/4(3) interr. affiancati	3-4(4)	300	LX4008		LX4008		

* No. 5 circuit-breakers only for structures W=800mm.

** No. 4 circuit-breakers only for structures W=800mm.

(1) Version for Tmax with differential module underplaced RC 221/222.

(2) For 3 poles breakers please order accessory flange codes: AD3305 XT1 3P Flange for plate-mounting - AD3306 XT2 3P Flange for plate-mounting - AD3307 XT3 3P Flange for plate-mounting - AD3308 XT4 3P Flange for plate-mounting.

(3) No. 4 CBs side by side 3P, No. 3 CBs side by side 4P.

(4) Order AD3310, AD3311, AD3312, AD3313.

> Selection by components page 3/22 > In-depth technical information page 6/1 > Overall dimensions page 7/1

ArTu L modular structures
Kit for installing apparatus

3

Plain back plates, plain and ventilated panels

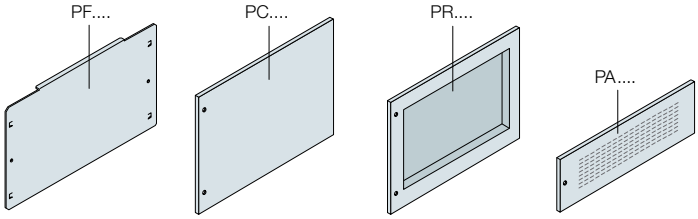

	Back plates			Panels						
	Plain flat			Plain flat			Plain recessed			Ventilated
H (mm)	Structure 24 DIN mod. W=600mm	Structure 36 DIN mod. W=800mm	Cable container W=300mm	Structure 24 DIN mod. W=600mm	Structure 36 DIN mod. W=800mm	Cable container W=300mm	Structure 24 DIN mod. W=600mm	Structure 36 DIN mod. W=800mm	Cable container W=300mm	Structure 24 DIN mod. W=600mm
50				PC1050	PC0580					
100				PC1600	PC1800	PC1403				PA1600
150				PC1150	PC1580					
200	PF1002	PF1102		PC2600	PC2800	PC2401	PR2600	PR2800		PA2600
300	PF1003	PF1103	PC0300	PC3600	PC3800	PC3401				
400	PF1004	PF1104		PC4600	PC4800	PC4401	PR4600	PR4800	PR4401	
600	PF1006	PF1106	PC0600	PC6600	PC6800	PC6401	PR6600	PR6800		
800	PF1008	PF1108		PC8600	PC8800	PC8401				
1600				PC1660	PC1680					
1800				PC1860	PC1880					
2000				PC2060	PC2080					

Useful internal space

Wall-mounted structure

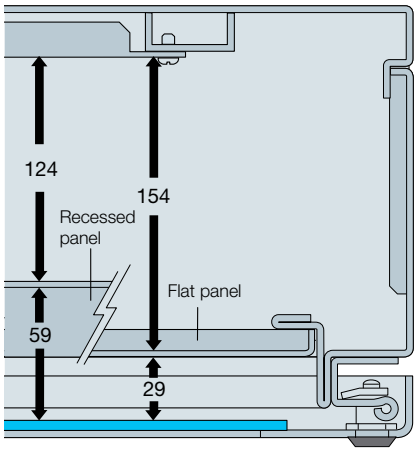

Floor-mounted structure

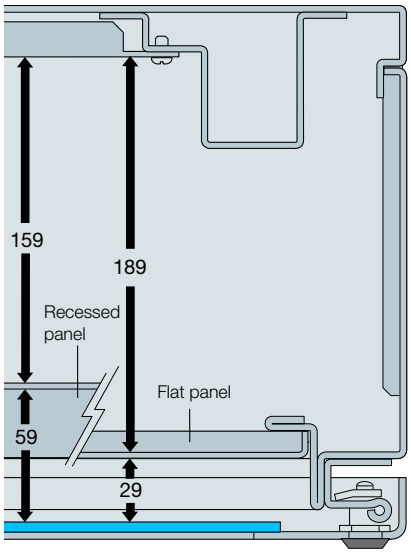

Cable connection box

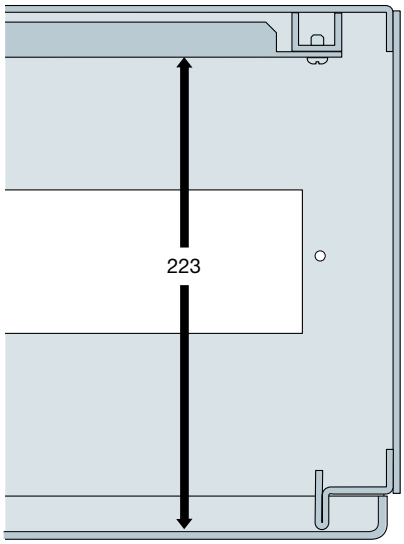

> Selection by components page 3/22 > In-depth technical information page 6/1 > Overall dimensions page 7/1

Kit for OT160÷400

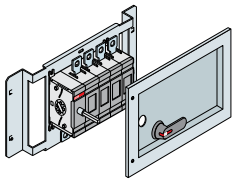

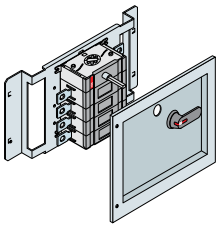

Description	Code	Dimensions (mm) H	W	Pole	Control	Maximum handle lenght	Minimum shaft lenght
Kit OT160/200/250/315/400 vertical	K01260	300	600	E03-04	Lateral	80mm (Ø6)-125mm (Ø12)	130mm (Ø6)-166mm (Ø12)
Kit OT160/200/250/315/400 horizontal	K01261	300	600	E03-04	Lateral	80mm (Ø6)-125mm (Ø12)	130mm (Ø6)-166mm (Ø12)
Kit OT160/200/250/315/400 vertical	K01280	300	800	E03-04	Lateral	80mm (Ø6)-125mm (Ø12)	130mm (Ø6)-166mm (Ø12)
Kit OT160/200/250/315/400 horizontal	K01281	300	800	E03-04	Lateral	80mm (Ø6)-125mm (Ø12)	130mm (Ø6)-166mm (Ø12)
Kit OT160/200/250/315/400 vertical	K01262	300	300	E03-04	Lateral	80mm (Ø6)-125mm (Ø12)	130mm (Ø6)-166mm (Ø12)

Panels for square measuring instruments

These allow installation of measuring instruments and relative changeover switches.

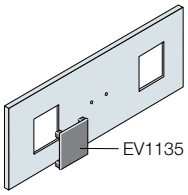

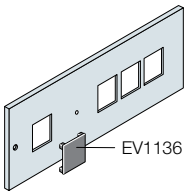

	2-instrument panel				4-instrument panel			
	72x72mm		96x96mm		72x72mm		96x96mm	
H (mm)	24 mod.DIN W=600mm	36 mod.DIN W=800mm	24 mod.DIN W=600mm	36 mod.DIN W=800mm	24 mod.DIN W=600mm	36 mod.DIN W=800mm	24 mod.DIN W=600mm	36 mod.DIN W=800mm
200	PS2720	PS2728	PS2960	PS2968	PS4720	PS4728	PS4960	PS4968

Square instrument hole covers

Code	Description
EV1135	Hole cover of 72x72mm instrument black RAL 9005
EV1136	EV1136 Hole cover of 96x96mm instrument black RAL 9005

> Selection by components page 3/22 > In-depth technical information page 6/1 > Overall dimensions page 7/1

ArTu L modular structures
Kit for installing apparatus

3

Installation of terminal boxes on DIN rail

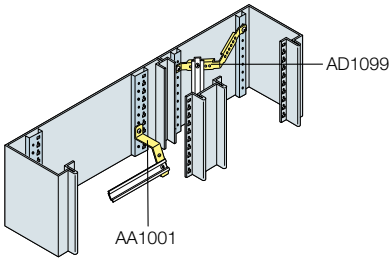

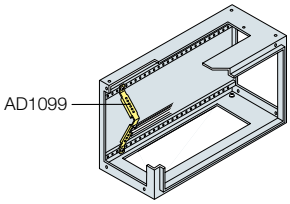

	Terminal box mounting position			
Installation on DIN rail	**Structure**	**Internal cable container**	**Cable container side-by-side**	**Box**
Horizontal				AD1099
Horizontal angled 45°	AA1001			
Vertical		AD1005	AD1099	

Installation of terminal boxes on DIN rail and earthing busbar

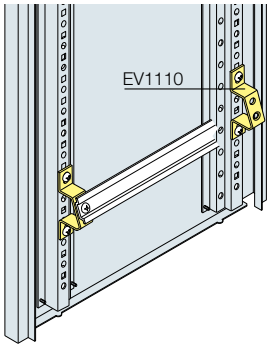

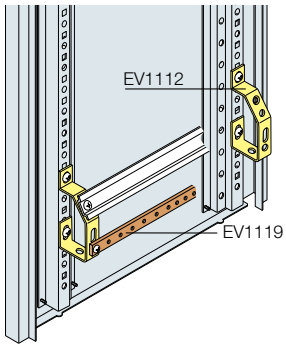

	Angled supports for terminal boxes and earthing busbar
Code	**Description**
EV1110-EV2110	Angled supports 1 row of terminals
EV1112-EV2112	Angled supports 1 row of terminals + earth

> Selection by components page 3/22 > In-depth technical information page 6/1 > Overall dimensions page 7/1

Distribution systems

Modular dividers

		Single-pole						Three-poles	
		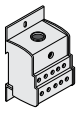		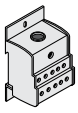			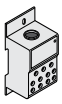	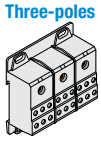	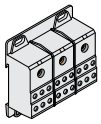
Code		**AD1076**	**AD1080**[1]	**AD1007**	**D1081(2)**	**AD1030**	**AD1031**	**AD1075**	**AD1006**
In	(A)	125	125	175	175	250	400	125	175
Icw	(kA)	4.4	4.2	11	1.1	21	21	4.4	11
Version	pole	1	1	1	1	1	1	3	3
Installation		DIN35/plate	DIN35/plate	DIN35/plate	DIN35/plate	DIN35/plate	DIN35/plate	DIN35/plate	DIN35/plate
Power supply Ø cable (mm²)	min.	10	6	16	10	35	95	10	16
	max	35	35	70	70	120	185	35	70
No. outgoing feeder Ø cable (mm²)	1,5÷10					4	4		
	2,5÷16	10	6	10	6	5	5	6	6
	2,5÷25					2	2		
Dimensions HxWxD	(mm)	71x45x42,5	74x27x47	71x45x42,5	92x35x49	95.5x45x49	95.5x45x49	71.5x80x42,5	71.5x80x42,5
No. DIN modules		2,5	1,5	2,5	2	3	3	4.5	4.5
Rated service voltage Ue	(V)	1000 Vac 1500 Vdc	1000 Vac 1500 Vdc	1000 Vac 1500 Vdc	1000 Vac 1500 Vdc	1000 Vac 1500 Vdc	1000 Vac 1500 Vdc	1000 Vac 1500 Vdc	1000 Vac 1500 Vdc
Degree of protection	IP	20	20	20	20	20	20	20	20

		Four poles					
		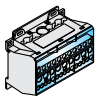	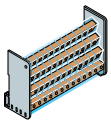	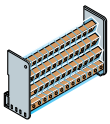	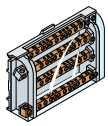	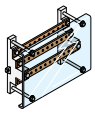	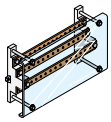
Code		**AD1004**	**AD1028**	**AD1029**	**AD1027**	**AD1034**	**AD1053**
In	(A)	125	125	125	160	250	250
Icw	(kA)	10	4.2	4.2	6.2	15	15
Ipk	(kA)	24	25	25	20	30	30
Version	poli	4.2	4	4	4	30	30
Installation		DIN35/plate	DIN35/plate	DIN35/plate	DIN35	4	4
Power supply Ø cable (mm²)	min.	6	6	6	10	with AD1038 brackets	with AD1038 brackets
	max	35	25 with cable terminal	25 with cable terminal	50		
No. outgoing feeder Ø cable (mm²)		1/6 5/phase				No. 22 holes M5 with 17,5mm pitch per phase (threaded busb. 20x5mm)	No. 32 holes M5 with 17,5mm pitch per phase (threaded busb. 20x5mm)
		1.5/6 4/neutral					
		1.5/10 2/phase	7	9			
		6/neutral					
		1.5/16		2			
		2.5/16			8		
		6/25	2	2	3		
Dimensions HxWxD	(mm)	74.5x98x45	93x89x48	96x126x48	90x160.5x50	150x600x70	150x800x70
No. DIN modules		5,5	5	7	9	24	36
Rated service voltage Ue	(V)	1000 Vac 1500 Vdc	440	440	440	500	500
Degree of protection	IP	20	20	20	20		

[1] Possibility of putting in parallel with AD1083 connections.

[2] Possibility of putting in parallel with comb type connection (not supplied).

> Selection by components page 3/22 > In-depth technical information page 6/1 > Overall dimensions page 7/1

ArTu L modular structures
Distribution systems

Flexible busbars up to 1000 A

Cross-section	In (A)	Code	No. busbar/ phase	Capacity (A) IP31	IP41	IP65	Dimensions WxW (mm)	Section dimensions (mm²)	Lenght (mm)	Weight (kg)
	250	BF1602	1	395	323	250	20x3	60	2000	1,42
	400	BF2502	1	498	460	400	20x5	100	2000	2,15
	500	BF4002	1	660	620	500	24x6	144	2000	3
	630	BF4012[1]	1	758	702	630	32x5	160	2000	3,36
	1000	BF6302	1	1203	1140	1000	40x8	320	2000	6,33

[1] Only for front extended terminals and rear terminals.

Busbars with shaped section for applications up to 800 A

Cross section	In (A)	Code	No. busbar/ phase	Capacity (A) IP31	IP41	IP65	Dimensions WxW (mm)	Section dimensions (mm²)	Lenght (mm)	Weight (kg)
	520	BA0400	1	630	520	35	20x20	200	1730	4
	830	BA0800	1	970	830	35	20x20	200	1730	4,4

> Selection by components page 3/22 > In-depth technical information page 6/1 > Overall dimensions page 7/1

Selection of busbar holders and crosspieces

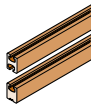

Vertical installation

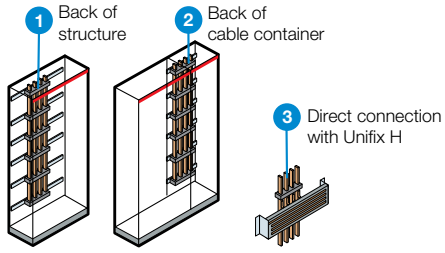

Horizontal installation

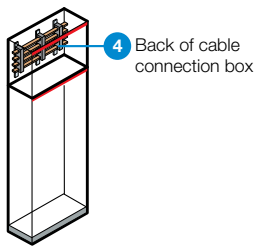

Busbar holder Type	Busbars with shaped section In ≤ 400÷800A	Installation	Crosspieces for fixing to structure: Structure	Cable container	Internal cable container	Cable connection box
Scaled up to 800A PB0802 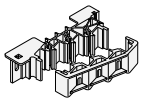	BA0400 BA0800	2		TL2000 (W=300mm)	TL2100 W=200mm)	
		4				TL2000 (H=300mm)
Linear up to 800A PB0803 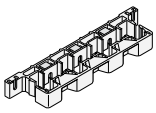	BA0400 BA0800	1	TL1000 (W=600mm) TL1100 (W=800mm)	TL3000 (W=300mm)		
		2				
		3	TL1000 (W=600mm) TL1100 (W=800mm)			
		4				TL3000 (H=300mm)

Table for selection and assembly of busbars with shaped section and busbar holders

The use of the correct number of busbar holders ensures resistance to electrodynamic forces in the case of a short-circuit. Assess the maximum distance (max X) which must not be exceeded between two consecutive busbar holders according to the max. I_{cc}.

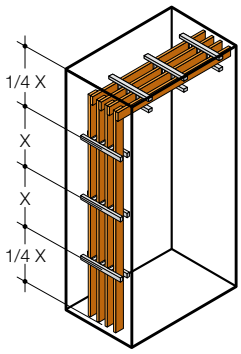

The distance between the first busbar holder and the end of the busbar must not exceed $^1/_4$ of "X".

Busbar	Capacity	Busbar holder	No. of busbar holders according to the max. I_{cc}: No.busbars per phase	25 kA	X max (mm)	35 kA	X max (mm)	50 kA	X max (mm)	65 kA	X max (mm)	75 kA	X max (mm)	85 kA	X max (mm)	100 kA	X max (mm)
		Linear															
BA0400	400A	PB0803	1	4	550	5	425	-	-	-	-	-	-	-	-	-	-
BA0800	800A	PB0803	1	4	550	4	550	-	-	-	-	-	-	-	-	-	-
		Scaled															
BA0400	400A	PB0802	1	4	550	4	550	-	-	-	-	-	-	-	-	-	-
BA0800	800A	PB0802	1	4	550	4	550	-	-	-	-	-	-	-	-	-	-

max X = maximum distance not to be exceeded between two consecutive busbar holders.

> Selection by components page 3/22 > In-depth technical information page 6/1 > Overall dimensions page 7/1

ArTu L modular structures
Distribution systems

Prefabricated kits for connections between apparatus and busbars with shaped section 400/800 A

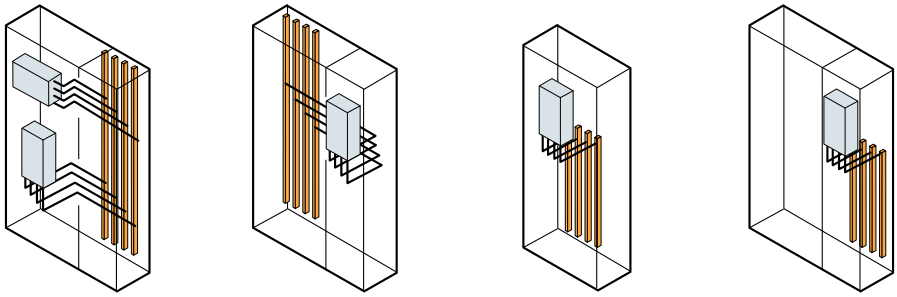

Apparatus		Connection kit			
Type of installation		**From circuit-breaker in structure towards busbars in cable container**	**From circuit-breaker in cable container towards busbars in structure**	**From circuit-breaker in structure towards busbars on back of structure**	**From circuit-breaker in cable container towards busbars on back of structure**
Type of busbar holder		**Scaled PB0802**	**Linear PB0803**	**Linear PB0803**	**Linear PB0803**
Apparatus with front terminals fixed horizontal installation					
Tmax T1	4 poles	KB1001[1]			
Tmax T2	4 poles	KB1001			
Tmax T3	4 poles	KB1002			
Tmax T5	4 poles	KB1020			
Tmax T5	4 poles CB + diff. mod.	KB1021			
Apparatus with front terminals fixed vertical installation					
Tmax T3	4 poles	KB1006	KB1010	KB1014 / KB1018[2]	KB1014 / KB1018[2]
Tmax T3	4 poles (w/mount. struct)	KB1006	KB1010	KB1014	KB1014
Tmax T3	4 poles CB + diff.mod.		KB1019		
Tmax T5	4 poles	KB1022	KB1024		
Tmax T5	4 poles CB + diff.mod.	KB1022	KB1024		

[1] For Tmax T1 fit the circuit-breaker with extended terminals.
[2] KB1018: only with flat busbars and scaled busbar holder.

Use of prefabricated kits

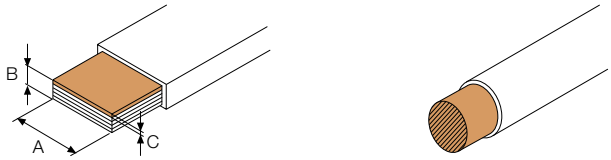

	Dimensions of the conductors	
Apparatus	**AxBxC (mm)**	**Cross-section (mm²)**
Tmax T1-T2	-	50
Tmax T3	20x5x1	150
Tmax T5 - 630A	32x6x1	-

The use of the prefabricated connection kits is only possible with the cable container mounted on the right of the structure.

> Selection by components page 3/22 > In-depth technical information page 6/1 > Overall dimensions page 7/1

Flat busbars for distribution up to 630 A

Cross-section	In (A)	Code	No. busbar/ phase	Capacity (A) IP31	Capacity (A) IP43	Icw max (kA)	Dimensions WxW (mm)	Dimensions Lenght (mm)	Weight (kg)
	275	BR0250	1	290	275	23	15x5	1750	1,35
	440	BR0400	1	475	440	23	25x5	1750	1,8
	695	BR0630	1	750	695	32	30x10	1750	4,4

3

Table for selection and assembly of busbars with flat section and busbar holders

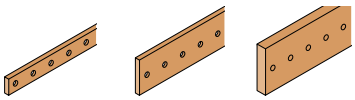

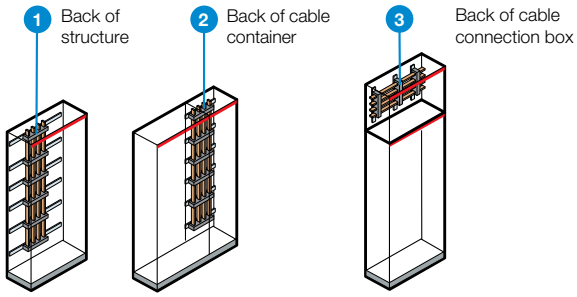

Busbar rolder type	Flat busbar In = 250A	Flat busbar In = 400A	Flat busbar In = 630A	Installation	Crosspieces for fixing to structure: Structure	Crosspieces for fixing to structure: Cable container	Crosspieces for fixing to structure: Cable connection box
Scaled up to 630A BP0634				2		TL3000 (W=300mm)	
				3			TL3000 (H=300mm)
Linear up to 800A BP0630				1	TL1000 (W=600mm) TL1100 (W=800mm)		
				2		TL3000 (W=300mm)	
				3			TL3000 (H=300mm)

> Selection by components page 3/22 > In-depth technical information page 6/1 > Overall dimensions page 7/1

ArTu L modular structures
Distribution systems

Table for selection and assembly of busbars with flat section and busbar holders

The use of the correct number of busbar holders ensures resistance to electrodynamic forces in the case of a short-circuit. Assess the maximum distance (max X) which must not be exceeded between two consecutive busbar holders according to the max. I_{cc}.

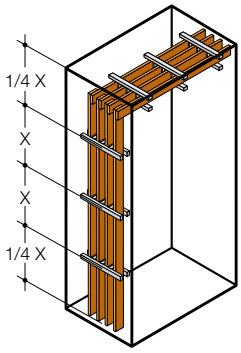

The distance between the first busbar holder and the end of the busbar must not exceed $^1/_4$ of "X".

Busbar	Capacity	Busbar holder	No. of busbar holders according to the max. I_{cc}								
			No. busbars per phase	25 kA	X max (mm)	35 kA	X max (mm)	50 kA	X max (mm)	65 kA	X max (mm)
BR0250	250A	BP0634	1	11	175	15	125	18	100	-	-
BR0400	400A		1	9	225	15	125	18	100	-	-
BR0630	630A		1	9	225	15	125	18	100	-	-
BR0250	250A	BP0630	1	4	500	6	350	10	200	-	-
BR0400	400A		1	4	500	6	350	10	200	-	-
BR0630	630A		1	-	-	4	600	4	600	9	210

max X = maximum distance not to be exceeded between two consecutive busbar holders

Flat drilled and threaded busbars for earthing connections

Cross-section	Code	Threading	Pitch	WxW (mm)	Length (mm)	AxB (mm)
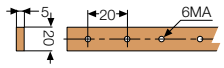	EV1119	6 MA	20	20x5	2000	
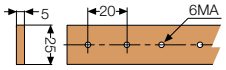	EV1120	6 MA	20	25x5	2000	
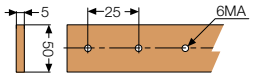	EV1121	6MA	25	50x5	2000	
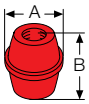	EV1122	6MA				34x30
	EV1123	8MA				34x30
	EV1124	6MA				40x50
	EV1125	8MA				40x50

> Selection by components page 3/22 > In-depth technical information page 6/1 > Overall dimensions page 7/1

Unifix systems

Technical characteristics		Unifix H	Unifix L
Rated service voltage (U_e)		690V AC	400V AC
Rated insulation voltage (U_i)		1000V AC	500V AC
Rated impulse withstand voltage (U_{imp})		8kV	6kV
Rated frequency		50/60Hz	50/60Hz
Rated current (I_n)	central power supply	400A	100A
	lateral power supply	320A	80A
Rated short-time withstand current (I_{cw})		25kA	
Maximum peak current (I_{pk})		52,5kA-400V	
Maximum installable circuit-breaker size		250A	100A
Conditioned short-circuit current (Icc)	Tmax T1	36kA-400V	
	Tmax T2 N, S [1]	50kA-400V	
	Tmax T3	50kA-400V	
	Tmax XT1	50kA-400V	
	Tmax XT3	50kA-400V	
With circuit-breaker	S200		6kA-400V
	S200M		10kA-400V
	S200P		25kA-400V
Degree of protection		IP20 with accessory	IP20
Characteristics of the insulating material		Self-extinguishing thermoplastic V1 (UL94)	Self-extinguishing thermoplastic V1 (UL94)
Characteristics of the conductor material		Electrolytic copper	Electrolytic copper
Width (No. modules/mm)		24/600 36/800	12/400 24/600 36/800

Installation of Unifix system			
Frame for Tmax T and Tmax XT series	300x600mm (HxL)	ED2183	
	300x800mm (HxL)	ED2191	
Fixing brackets H=300mm		AD1097	
Crosspiece for direct connection to the rear busbars with shaped section with PB0803	W=600mm	TL1000	
	W=800mm	TL1100	
Busbar 2P	12 mod.		ED2993
	18 mod.		ED3009
	24 mod.		ED3017
	36 mod.		ED3025
Busbar 4P	12 mod.		ED2944
	18 mod.		ED2951
	24 mod.		ED2969
	36 mod.		ED2977
Fixing support	24 mod.		GD1520
	36 mod.		GD1530

[1] Select circuit-breakers in version with front terminals for copper cables.

> Selection by components page 3/22 > In-depth technical information page 6/1 > Overall dimensions page 7/1

ArTu L modular structures
Distribution systems

Unifix systems

Table for selecting connections according to the circuit-breaker

Series of circuit-breakers		Unifix H		Unifix L
SN201		(top power supply)		
DS941		**ED2654** L1/N 40A		**ED3272** L1/N 40A
		ED2662 L2/N 40A		**ED3280** L2/N 40A
		ED2670 L3/N 40A		**ED3298** L3/N 40A
S200 - DS200		(top power supply)	(bottom power supply)	
F200 up to 63A (Unifix L)		**ED2531** L1 63A	**ED2572** L1 63A	**ED3033** L1 100A
		ED2549 L2 63A	**ED2590** L2 63A	**ED3041** L2 100A
		ED2556 L3 63A	**ED2598** L3 63A	**ED3058** L3 100A
		ED2564 N 63A	**ED2606** N 63A	**ED3066** N 100A
		ED2845 False pole module		
S800		(top power supply)		
		ED2557 L1 ≤32A		
		ED2558 L2 ≤32A		
		ED2559 L3 ≤32A		
		ED2560 N ≤32A		
		ED2551 L1 125A		
		ED2552 L2 125A		
		ED2553 L3 125A		
		ED2554 N 125A		
		ED2550 False pole module		
S280 (80-100A)		(top power supply)		
E200 up to 100A - RS370 - F200 80/100A (Unifix H)		**ED2720** L1 100A		**ED3132** pow. supply L1/L2/L3/N - 350mm
		ED2738 L2 100A		**ED0026** pow. supply L1/L2/L3/N - 1500mm
		ED2746 L3 100A		**ED0025** pow. supply L1/L2/L3/N - 2500mm
		ED2753 N 100A		
MDRC - Various apparatus		(top power supply)	(bottom power supply)	
		ED2894 L1/N 16A	**ED2910** L1/N 16A	**ED3108** pow. supply 2 cables L1/N 16A
		ED2902 L1/L2 16A	**ED2928** L1/L2 16A	**ED3116** pow. supply 3 cables L1/L2/L3 16A
				ED3124 pow. supply 4 cables L1/L2/L3/N 16A
				ED3355 pow. supply 2 cables L1/N 40A
				ED3363 pow. supply 3 cables L1/L2/L3 40A
				ED3371 pow. supply 4 cables L1/L2/L3/N 71A
Tmax T1	Circuit-breaker	(top/bottom power supply)		
Tmax XT1		**ED2217** L1 Top/L2 Bottom		
		ED2225 L2 Top/L1 Bottom		
		ED2233 L3 Top/N Bottom		
		ED2241 N Top/L3 Bottom		
	Residual current	**ED2373** False pole module		
	Selenoid operator	**ED2381** False pole module		
Tmax T2	Circuit-breaker	(top/bottom power supply)		
		ED2258 L1 Top/L2 Bottom		
		ED2266 L2 Top/L1 Bottom		
		ED2274 L3 Top/N Bottom		
		ED2282 N Top/L3 Bottom		
	Residual current	**ED2373** False pole module		
	Selenoid operator	**ED2399** False pole module		
Tmax T3	Circuit-breaker	(top power supply)	(bottom power supply)	
Tmax XT3		**ED2290** L1	**ED2332** L1	
		ED2308 L2	**ED2340** L2	
		ED2316 L3	**ED2357** L3	
		ED2324 N	**ED2365** N	
	Residual current	**ED2373** False pole module		

For the DDA locks, order the false module ED2845 codes separately according to the size of the residual current lock.

If mounting XT1-XT3 on Unifix H, the polished flanges AD3301, AD3302, AD3303, AD3304 must also be ordered, see spare parts page 3/49.

> Selection by components page 3/22 > In-depth technical information page 6/1 > Overall dimensions page 7/1

Unifix systems

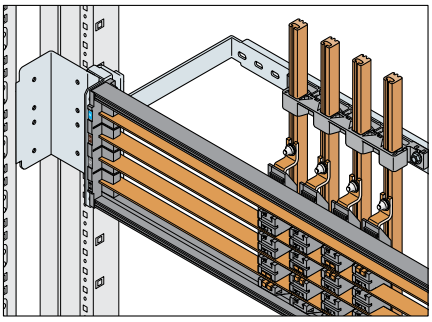

Direct connection with the 400/800A system of busbars with shaped section.

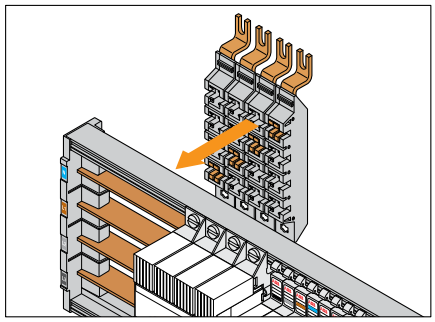

Feeder module for 400A frame (L1-L2-L3-N).

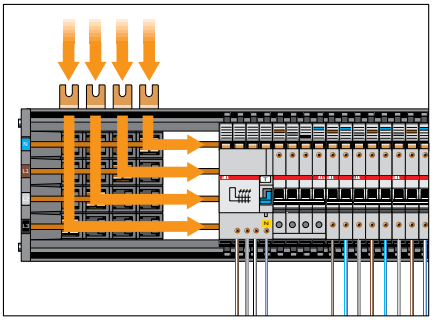

Direct power supply of the bases by means of feeder module ED2209.

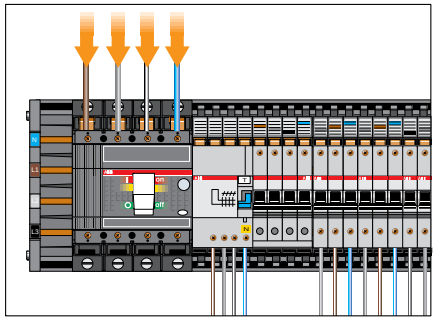

Power supply by means of general row circuit-breaker.

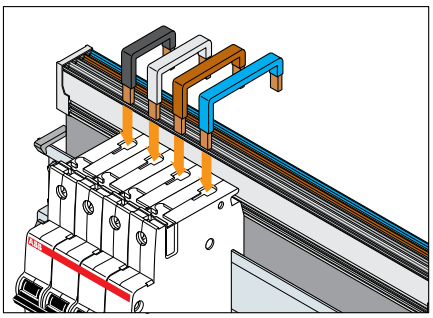

Connections (L1-L2-L3-N) for System Pro *M* modular apparatus.

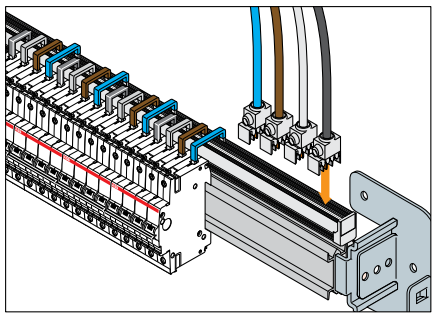

Power supply of the busbar with 100A feeder module without cable. Terminal capacity 35mm².

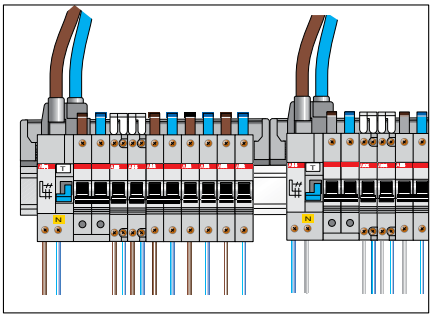

Direct power supply of the busbars by means of feeder module.

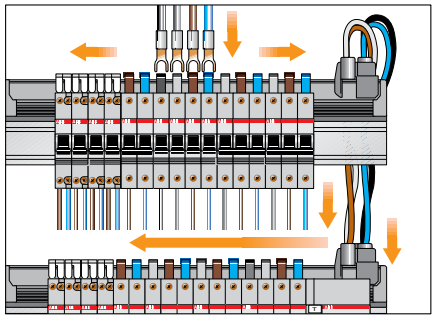

Power supply by means of modules and cables in parallel.

> Selection by components page 3/22 > In-depth technical information page 6/1 > Overall dimensions page 7/1

ArTu L modular structures
Ordering codes

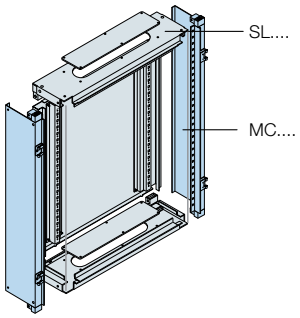

Wall-mounted switchgear

Wall-mounted switchgear structure

Dimensions (mm) H	W	D	Code			Package/ No. of pieces
Back, roof and base for structure						
600	600 (24 DIN mod.)	165	SL0600			1/1
800		165	SL0800			1/1
1000		165	SL1000			1/1
1200		165	SL1200			1/1

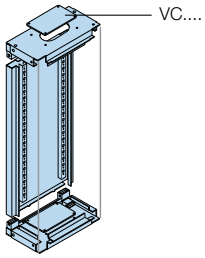

Additional wall-mounted cable container structure

Can be mounted on the right and left of the basic structure, can be used as cable container or as incoming column which can be equipped with kit for Tmax circuit-breakers

Dimensions (mm) H	W	D	Code			Package/ No. of pieces
Back, roof and base for cable container						
600	300	165	VC0600			1/1
800		165	VC0800			1/1
1000		165	VC1000			1/1
1200		165	VC1200			1/1

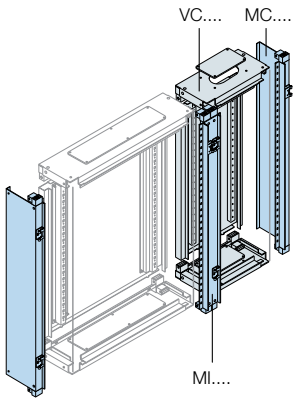

Intermediate uprights for lateral side-by-side positioning or external cable container

Allows several structures side-by-side on the right and left of the basic one.

Dimensions (mm) H	Code			Package/ No. of pieces
Intermediate upright for placing structures side by side				
600	MI0600			1/1
800	MI0800			1/1
1000	MI1000			1/1
1200	MI1200			1/1

Side closure with blind panel

Dimensions (mm) H	D	Code			Package/ No. of pieces
No. 2 side closures for wall-mounted structures					
600	165	MC0600			1/2
800	165	MC0800			1/2
1000	165	MC1000			1/2
1200	165	MC1200			1/2

> Rapid selection table page 3/4 > In-depth technical information page 6/1 > Overall dimensions page 7/1

Floor-mounted switchgear

Floor-mounted structure

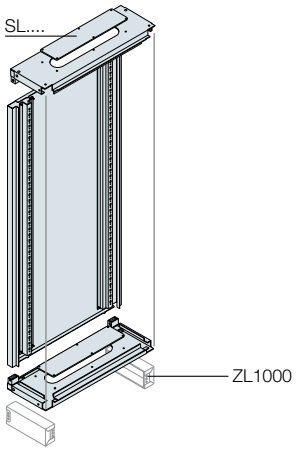

Dimensions (mm) H	W	D	Code			Package/ No. of pieces
Back, roof and base for structure						
1400	600 (24 DIN mod.)	195	SL1400			1/1
1600		195	SL1600			1/1
1800		195	SL1800			1/1
2000		195	SL2000			1/1
1400	800 (36 DIN mod.)	195	SL1408			1/1
1600		195	SL1608			1/1
1800		195	SL1808			1/1
2000		195	SL2008			1/1

Internal cable container structure 36 mod. (W=800mm)

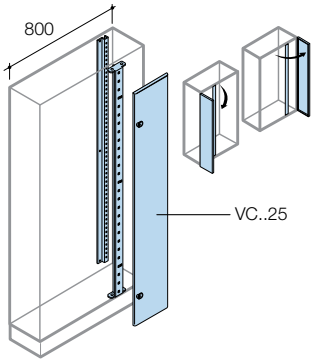

Only to be ordered for the 36 DIN mod. structures (W=800mm). Consisting of a pair of functional uprights and a blind door complete with two key locks. Can be mounted either on the right or left.

Dimensions (mm) H	W	D	Code			Package/ No. of pieces
Pair of functional uprights and internal blind door						
1400	200	195	VC1425 (1)			1/1
1600		195	VC1625 (2)			1/1
1800		195	VC1825 (3)			1/1
2000		195	VC2025 (4)			1/1

(1) For structure SL1408 - (2) For structure SL1608 - (3) For structure SL1608 - (4) For structure SL2008

External cable container

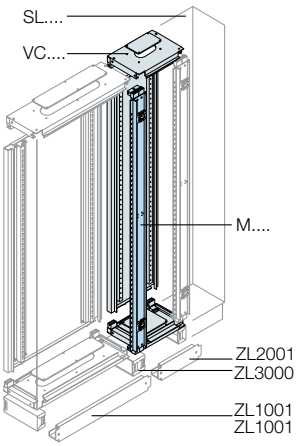

Can be mounted on the right and left of the basic structure, can be used as cable container or as incoming column which can be equipped with kit for Tmax circuit-breakers.

Dimensions (mm) H	W	D	Code			Package/ No. of pieces
Back, roof and base for cable container						
1400	300	195	VC1400			1/1
1600		195	VC1600			1/1
1800		195	VC1800			1/1
2000		195	VC2000			1/1

Note: the palletisable base strips (ZL1000 or ZL3000) and the flanges (ZL1001, ZL1101 or ZL2001) must be ordered separately, see page 3/27.

Intermediate uprights for lateral side-by-side positioning or external cable container

Allows several structures side-by-side on the right and left of the basic one.

Dimensions (mm) H	Code			Package/ No. of pieces
Intermediate upright for placing structures side by side				
1400	MI1400			1/1
1600	MI1600			1/1
1800	MI1800			1/1
2000	MI2000			1/1

> Rapid selection table page 3/4 > In-depth technical information page 6/1 > Overall dimensions page 7/1

ArTu L modular structures
Ordering codes

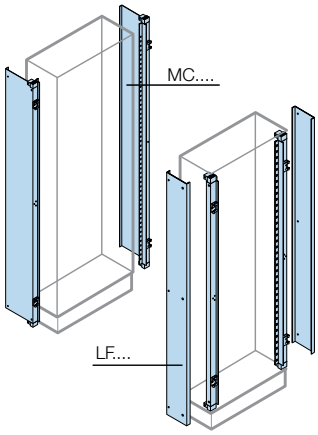

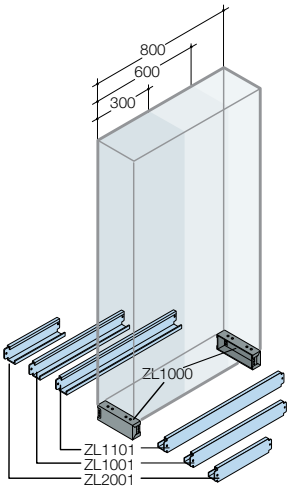

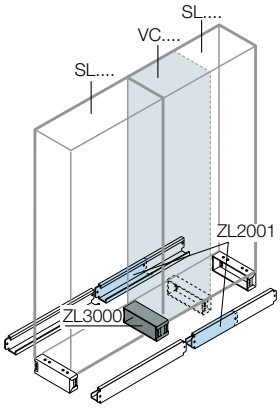

Floor-mounted switchgear

Side closure with blind panel

Description	Dimensions (mm) H	D	Code			Package/ No. of pieces
No. 2 fixed side closures	1400	195	MC1400			1/2
No. 2 fixed side closures	1600		MC1600			1/2
No. 2 fixed side closures	1800		MC1800			1/2
No. 2 fixed side closures	2000		MC2000			1/2

Side closure with removable panel

Description	Dimensions (mm) H	D	Code			Package/ No. of pieces
No. 2 removable side closures	1400	195	LF1400			1/2
No. 2 removable side closures	1600		LF1600			1/2
No. 2 removable side closures	1800		LF1800			1/2
No. 2 removable side closures	2000		LF2000			1/2

Base strips

Description	Dimensions (mm) H	Code			Package/ No. of pieces
Angles					
No. 2 angle pieces for structure or cable container	100	ZL1000			1/2
Intermediate angle for side-by-side structures	100	ZL3000			1/1
Plinth covering flanges					
No. 2 structure base strip flanges	600	ZL1001			1/2
No. 2 structure base strip flanges	800	ZL1101			1/2
No. 2 external cable container base strip flanges	300	ZL2001			1/2

Example of base strip composition for structures

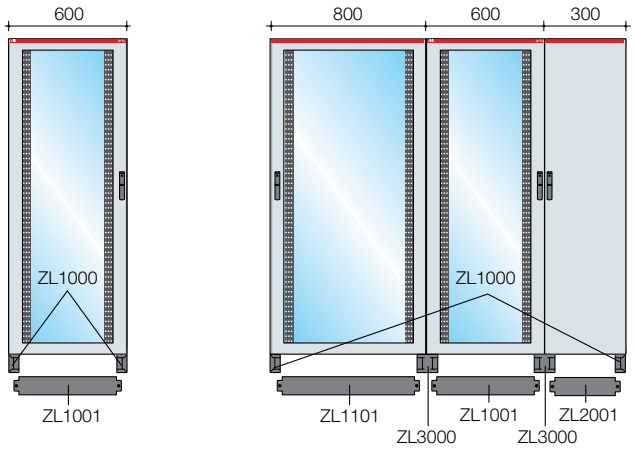

> Rapid selection table page 3/4 > In-depth technical information page 6/1 > Overall dimensions page 7/1

Wall-mounted/floor-mounted switchgear

Glass doors P43, 24/36 modules

Steel sheet door 15/10 thick with 4mm thick safety glass fitted with polyurethane gasket complete with handle with key with double tab. Reversible, hinged on the right or left.

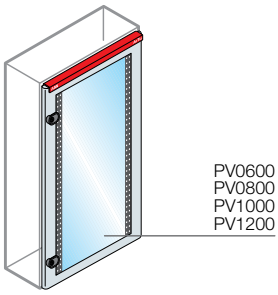

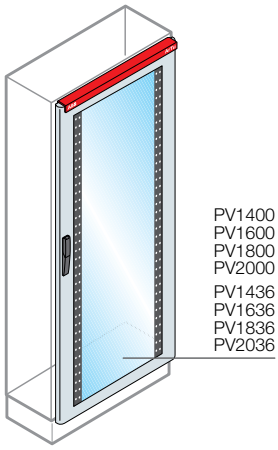

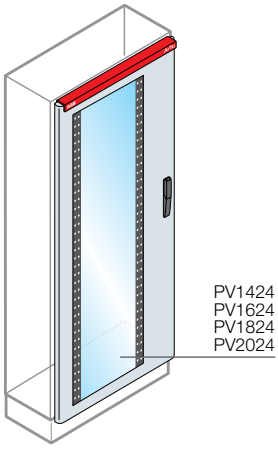

Dimensions (mm) H	W	Code			Package/ No. of pieces
Glass doors for wall-mounted structures 24 DIN mod.					
600	600	PV0600			1/1
800		PV0800			1/1
1000		PV1000			1/1
1200		PV1200			1/1
Glass doors for floor-mounted structures 24 DIN mod.					
1400	600	PV1400			1/1
1600		PV1600			1/1
1800		PV1800			1/1
2000		PV2000			1/1
Glass doors for floor-mounted structures 36 DIN mod.					
1400	800	PV1436			1/1
1600		PV1636			1/1
1800		PV1836			1/1
2000		PV2036			1/1
Glass doors for floor-mounted structures 36 DIN mod. + internal cable containers					
1400	800	PV1424			1/1
1600		PV1624			1/1
1800		PV1824			1/1
2000		PV2024			1/1

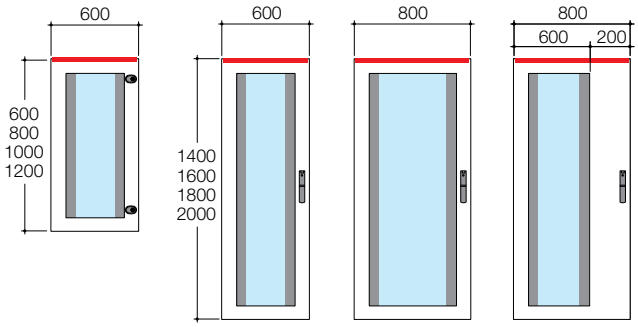

> Rapid selection table page 3/4 > In-depth technical information page 6/1 > Overall dimensions page 7/1

ArTu L modular structures
Ordering codes

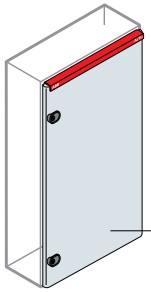

PC0601
PC0801
PC1001
PC1201
PC0602
PC0802
PC1002
PC1202

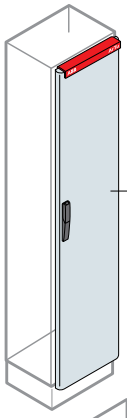

PC1402
PC1602
PC1802
PC2002

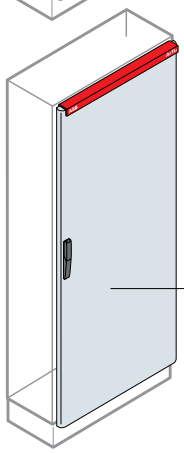

PC1401
PC1601
PC1801
PC2001
PC1436
PC1636
PC1836
PC2035

Wall-mounted/floor-mounted switchgear

Blind doors P43, 24/36 modules

Steel sheet door 15/10 thick fitted with polyurethane gasket complete with handle with key with double tab. Reversible, hinged on the right or left.

Dimensions (mm) H	W	Code			Package/ No. of pieces
Blind doors for wall-mounted structures 24 DIN mod.					
600	600	PC0601			1/1
800		PC0801			1/1
1000		PC1001			1/1
1200		PC1201			1/1
Blind doors for external wall-mounted cable container					
600	300	PC0602			1/1
800		PC0802			1/1
1000		PC1002			1/1
1200		PC1202			1/1
Blind doors for floor-mounted structures 24 DIN mod.					
1400	600	PC1401			1/1
1600		PC1601			1/1
1800		PC1801			1/1
2000		PC2001			1/1
Blind doors for floor-mounted structures 36 DIN mod.					
1400	800	PC1436			1/1
1600		PC1636			1/1
1800		PC1836			1/1
2000		PC2035			1/1
Blind doors for external floor-mounted cable container					
1400	300	PC1402			1/1
1600		PC1602			1/1
1800		PC1802			1/1
2000		PC2002			1/1

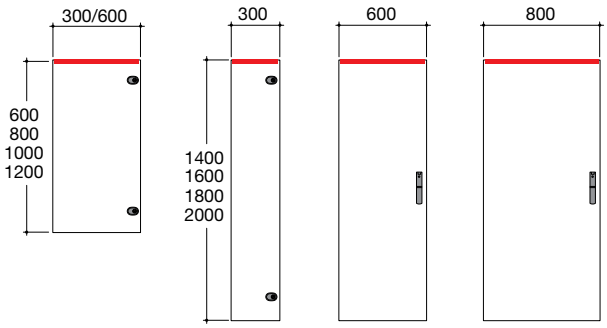

> Rapid selection table page 3/4 > In-depth technical information page 6/1 > Overall dimensions page 7/1

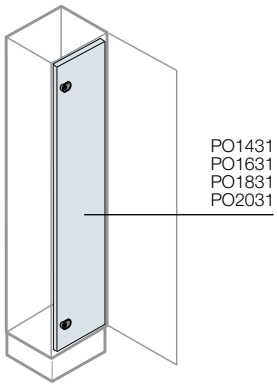

Wall-mounted/floor-mounted switchgear

Internal door for external cable container

Dimensions (mm) H	W	Code			Package/ No. of pieces
Internal doors for floor-mounted cable container					
1400	300	PO1431			1/1
1600		PO1631			1/1
1800		PO1831			1/1
2000		PO2031			1/1

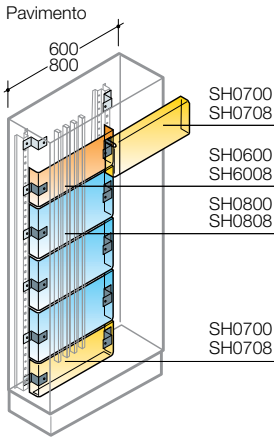

Form 2 segregation

Only for structures without external cable container

Description	Dimensions (mm) W	H	Code			Package/No. of pieces
24 DIN mod.						
Segregation kit	600	200	SH0600			1/1
Segregation kit		300	SH0800			1/1
Base/head segregation kit		200	SH0700			1/1
36 DIN mod.						
Segregation kit	800	200	SH0608			1/1
Segregation kit		300	SH0808			1/1
Base/head segregation kit		200	SH0708			1/1

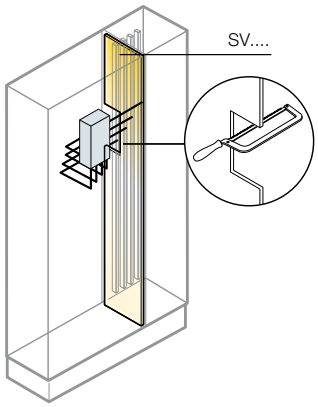

Vertical segregations

Only for external cable container without structure

Description	Dimensions (mm) H	D	Code			Package/No. of pieces
Vertical segregation kit	600	165	SV0600			1/1
Vertical segregation kit	800		SV0800			1/1
Vertical segregation kit	1000		SV1000			1/1
Vertical segregation kit	1200		SV1200			1/1
Vertical segregation kit	1400	195	SV1400			1/1
Vertical segregation kit	1600		SV1600			1/1
Vertical segregation kit	1800		SV1800			1/1
Vertical segregation kit	2000		SV2000			1/1

> Rapid selection table page 3/4 > In-depth technical information page 6/1 > Overall dimensions page 7/1

ArTu L modular structures
Ordering codes

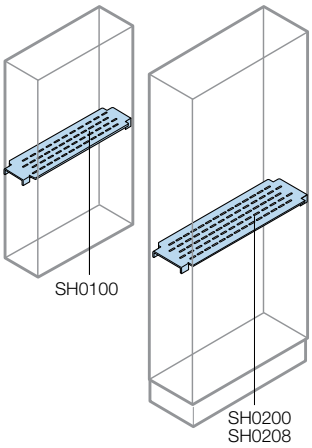

Wall-mounted/floor-mounted switchgear

Horizontal shelves

Description	Dimensions (mm) W	Code			Package/ No. of pieces
24 DIN mod.					
Horizontal shelf for wall-mounted structure	600	SH0100			1/1
Horizontal shelf for floor-mounted structure		SH0200			1/1
36 DIN mod.					
Horizontal shelf for floor-mounted structure	800	SH0208			1/1

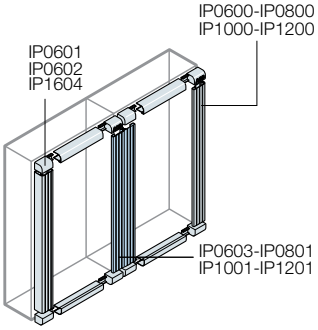

IP31 vertical finishing profiles

Description	Dimensions (mm) H	Code			Package/ No. of pieces
Vertical finishing profile for structure and wall-mounting cable container					
No. 2 finishing profiles structure/cab.cont.	600	IP0600			1/2
No. 2 finishing profiles structure/cab.cont.	800	IP0800			1/2
No. 2 finishing profiles structure/cab.cont.	1000	IP1000			1/2
No. 2 finishing profiles structure/cab.cont.	1200	IP1200			1/2
No. 1 finishing profiles for side-by-side	600	IP0603			1/1
No. 1 finishing profiles for side-by-side	800	IP0801			1/1
No. 1 finishing profiles for side-by-side	1000	IP1001			1/1
No. 1 finishing profiles for side-by-side	1200	IP1201			1/1
Vertical finishing profile for structure and floor-mounting cable container					
No. 2 finishing profiles structure/cab.cont.	600	IP1400			1/2
No. 2 finishing profiles structure/cab.cont.	800	IP1600			1/2
No. 2 finishing profiles structure/cab.cont.	1000	IP1800			1/2
No. 2 finishing profiles structure/cab.cont.	1200	IP2000			1/2
No. 1 finishing profiles for side-by-side	600	IP1401			1/1
No. 1 finishing profiles for side-by-side	800	IP1601			1/1
No. 1 finishing profiles for side-by-side	1000	IP1801			1/1
No. 1 finishing profiles for side-by-side	1200	IP2001			1/1

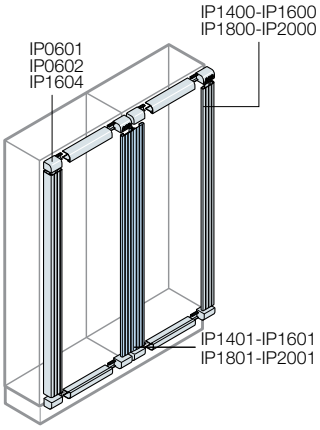

IP31 horizontal finishing profiles

Description	Dimensions (mm) W	Code			Package/ No. of pieces
Horizontal finishing profile for structure wall-mounting/floor-mounting and cable container					
No. 2 horizontal profiles for structure	600	IP0601			1/2
No. 2 horizontal profiles for structure	800	IP0604			1/2
No. 2 horizontal profiles for cable container	300	IP0602			1/2

> Rapid selection table page 3/4 > In-depth technical information page 6/1 > Overall dimensions page 7/1

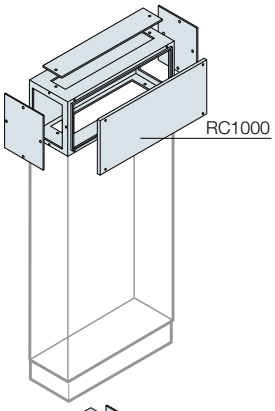

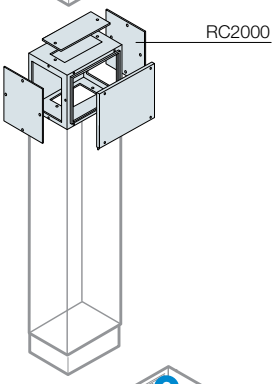

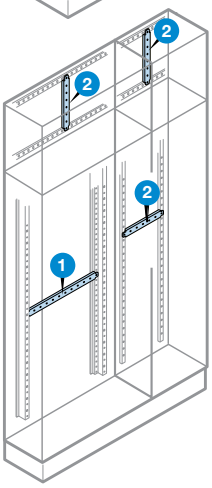

Floor-mounted switchgear

Connection box

Description	Dimensions (mm) H	W	D	Code			Package/ No. of pieces
Box for roof for floor-mounted structures 24 DIN mod.							
Box for roof for structure	400	600	195	RC1000			1/1
Box for roof for floor-mounted cable container							
Box for roof for cable container	400	300	195	RC2000			1/1

Crosspieces for accessories

Can be mounted on the structure to anchor cables or to mount accessories. They can be mounted on the side, on the rear or in the cable container of the structure.

Description	Mounting position	Code			Package/ No. of pieces
No. 2 structure rear crosspieces W=600mm	1	TL1000			1/2
No. 2 structure rear crosspieces W=800mm	1	TL1100			1/2
No. 2 cable container and box rear crosspieces W=300mm	2	TL3000			1/2
No. 2 fixing crosspieces W=300mm for scaled busbar holder PB0802	2	TL2000			1/2
No. 2 fixing crosspieces W=200mm for scaled busbar holder PB0802	2	TL2100			1/2

> Rapid selection table page 3/4 > In-depth technical information page 6/1 > Overall dimensions page 7/1

ArTu L modular structures
Ordering codes

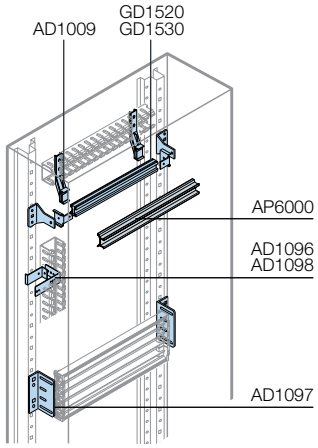

Kit for apparatus

DIN rail kits for System Pro-M modular apparatus, Tmax T1-T2-T3-XT1-XT3, moulded-case circuitbreakers

Kit consisting of double aluminum profile (DIN35) complete with fixing brackets.

Description	Dimensions (mm) W	Code			Package/ No. of pieces
12 DIN mod.					
DIN rail kit (aluminium)	300	GD1512			1/1
24 DIN mod.					
DIN rail kit (aluminium)	600	GD1520			1/1
36 DIN mod.					
DIN rail kit (aluminium)	800	GD1530			1/1

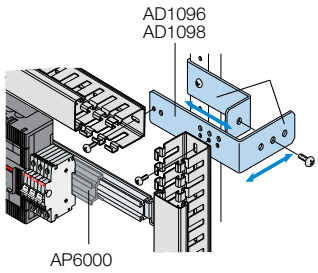

Supports for Unifix H

Description	Code			Package/ No. of pieces
for panel H=300mm	AD1097			1/1

Depth adapters

Enables the depth of miniature circuit-breakers to be adapted to that of moulded-case circuit-breakers mounted on the same DIN rail.

Description	Dimensions (mm) W	Code			Package/ No. of pieces
Depth adapters for Tmax T1-T2-T3-XT1-XT3	600	AP6000			1/1

Parete

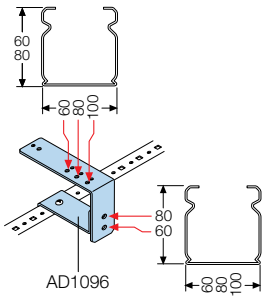

Supports for duct

Description	Code			Package/ No. of pieces
No. 4 plastic supports for horizontal duct	AD1009			1/4
No. 4 metal supports for horizontal/vertical wall-mounted duct	AD1096			1/4
No. 4 metal supports for horizontal/vertical floor-standing duct	AD1098			1/4

Pavimento

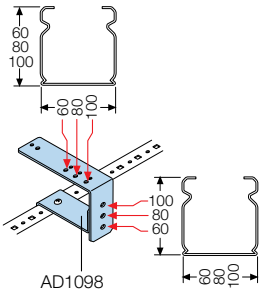

> Rapid selection table page 3/4 > In-depth technical information page 6/1 > Overall dimensions page 7/1

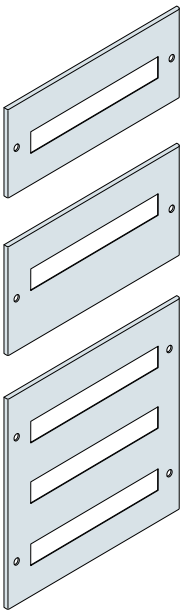

Kit for apparatus

Panels for square measuring instruments

Steel sheet panels complete with hinges positioned on the right or left.

Description	Dimensions (mm) H	W	Code			Package/ No. of pieces
12 DIN mod.						
Modular panel 1 DIN row	200	300	PM2612			1/1
24 DIN mod.						
Modular panel 1 DIN row	150	600	PM1500			1/1
Modular panel 1 DIN row	200		PM2624			1/1
Modular panel 1 DIN row Tmax RC	300		PM2312			1/1
Modular panel 1 DIN row only for Unifix H	300		PM3624			1/1
Modular panel 2 DIN rows	300		PM3648			1/1
Modular panel 3 DIN rows	600		PM6672			1/1
36 DIN mod.						
Modular panel 1 DIN row	150	800	PM1536			1/1
Modular panel 1 DIN row	200		PM2836			1/1
Modular panel 1 DIN row Tmax RC	300		PM2315			1/1
Modular panel 1 DIN row only for Unifix H	300		PM3836			1/1
Modular panel 2 DIN rows	300		PM3872			1/1

Width 600/800mm

PM1500/PM1536

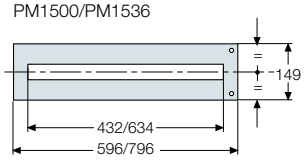

PM3648/PM3872

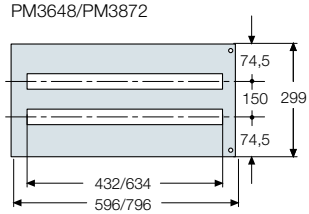

PM2624/PM2836

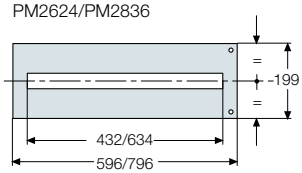

Version for Tmax with mod. diff.
PM2312/PM2315

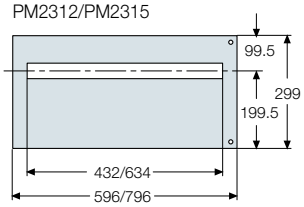

Version for Unifix H
PM3624/PM3836

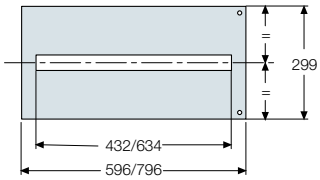

Width 600mm

PM6672

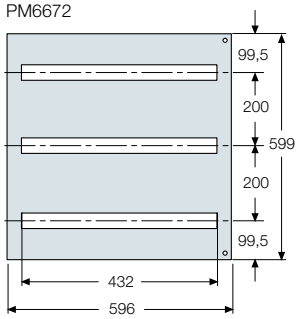

> Rapid selection table page 3/4 > In-depth technical information page 6/1 > Overall dimensions page 7/1

ArTu L modular structures
Ordering codes

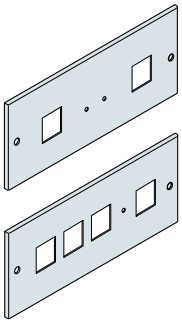

Kit for apparatus

Panels for square measuring instruments

Steel sheet panels complete with hinges positioned on the right or left.

Description	Dimensions (mm) W	Dimensions (mm) L	Code			Package/ No. of pieces
24 DIN mod.						
Panel for 2 instruments 72x72mm	200	600	PS2720			1/1
Panel for 2 instruments 96x96mm			PS2960			1/1
Panel for 4 instruments 72x72mm			PS4720			1/1
Panel for 4 instruments 96x96mm			PS4960			1/1
36 DIN mod.						
Panel for 2 instruments 72x72mm	200	800	PS2728			1/1
Panel for 2 instruments 96x96mm			PS2968			1/1
Panel for 4 instruments 72x72mm			PS4728			1/1
Panel for 4 instruments 96x96mm			PS4968			1/1

Width 600/800mm

PS4720/PS4728/PS4960/PS4968

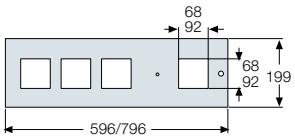

PS2720/PS2728/PS2960/PS2968

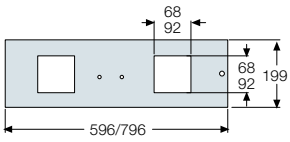

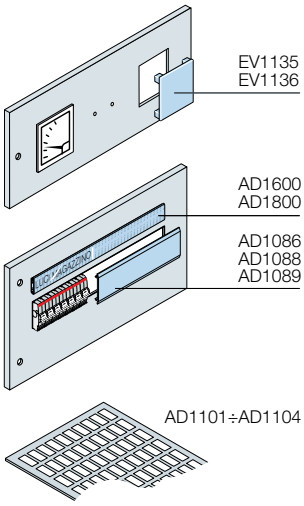

Accessories for panels

Description	Code			Package/ No. of pieces
No. 10 holes covers W=2000mm grey RAL 7035 colour	AD1086			1/10
No. 3 holes covers 36 Din modules grey RAL 7035 colour	AD1088			1/3
No. 3 holes covers 36 Din modules grey RAL 7035 colour	AD1089			1/3
No. 10 closing caps for instrument panel 72x72mm	EV1135			1/10
No. 5 closing caps for instrument panel 96x96mm	EV1136			1/5
No. 20 label-holders 24 DIN mod.	AD1600			1/20
No. 20 label-holders 36 DIN mod.	AD1800			1/20
No. 288 labels 1 mod. 15x17mm (HxW)	AD1101 (1)			1/288
No. 192 labels 2 mod. 15x27mm (HxW)	AD1102 (1)			1/192
No. 96 labels 3 mod. 15x50mm (HxW)	AD1103 (1)			1/96
No. 96 labels 4 mod. 15x67mm (HxW)	AD1104 (1)			1/96

(1) Labels can be written with Grafoplast compatible plotter system.

> Rapid selection table page 3/4 > In-depth technical information page 6/1 > Overall dimensions page 7/1

Kit for apparatus

Kit for OT160÷400

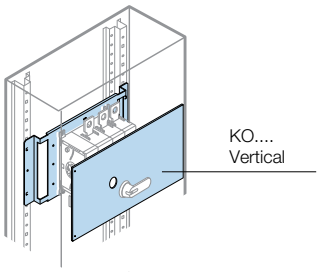

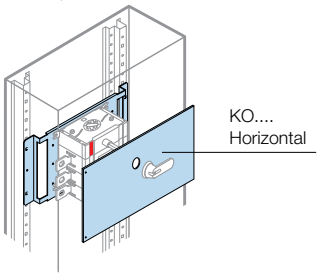

Description	Dimensions (mm) H	W	Control	Code			Package/ No. of pieces
24 DIN mod. - W=600mm							
Kit for vertical OT160/200/250/315/400	300	600	Lateral	KO1260			1/1
Kit for horizontal OT160/200/250/315/400	300	600	Lateral	KO1261			1/1
36 DIN mod. - W=800mm							
Kit for vertical OT160/200/250/315/400	300	800	Lateral	KO1280			1/1
Kit for horizontal OT160/200/250/315/400	300	800	Lateral	KO1281			1/1
External cable container							
Kit for vertical OT160/200/250/315/400	300	300	Lateral	KO1262			1/1

Standard blind for general apparatus

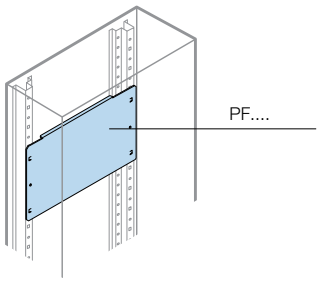

Description	Dimensions (mm) H	W	Code			Package/ No. of pieces
24 DIN mod.						
Blind back plate	200	600	PF1002			1/1
Blind back plate	300		PF1003			1/1
Blind back plate	400		PF1004			1/1
Blind back plate	600		PF1006			1/1
Blind back plate	800		PF1008			1/1
Blind back plate box/cable container	300		PC0600			1/1
36 DIN mod.						
Blind back plate	200	800	PF1102			1/1
Blind back plate	300		PF1103			1/1
Blind back plate	400		PF1104			1/1
Blind back plate	600		PF1106			1/1
Blind back plate	800		PF1108			1/1
External cable container						
Blind back plate box/cable container	300	300	PC0300			1/1

The panels must be ordered separately.

> Rapid selection table page 3/4 > In-depth technical information page 6/1 > Overall dimensions page 7/1

ArTu L modular structures
Ordering codes

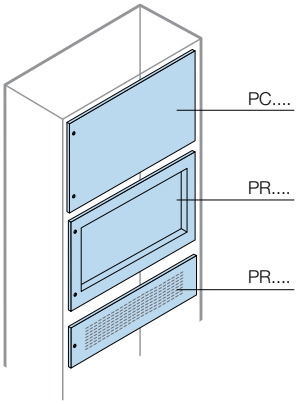

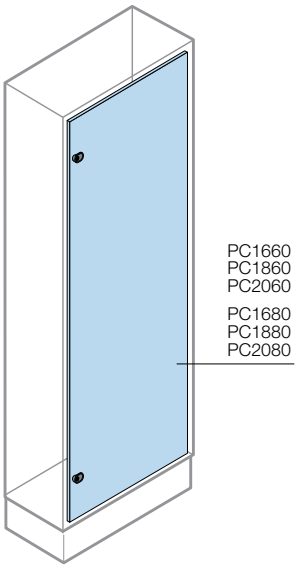

Kit for apparatus

Standard blind, recessed and ventilated panels for general apparatus

Description	Dimensions (mm) H	W	Code			Package/ No. of pieces
24 DIN mod.						
Blind panel	50	600	PC1050			1/1
Blind panel	100		PC1600			1/1
Blind panel	150		PC1150			1/1
Blind panel	200		PC2600			1/1
Blind panel	300		PC3600			1/1
Blind panel	400		PC4600			1/1
Blind panel	600		PC6600			1/1
Blind panel	800		PC8600			1/1
Blind panel (Inner door)	1600		PC1660			1/1
Blind panel (Inner door)	1800		PC1860			1/1
Blind panel (Inner door)	2000		PC2060			1/1
Blind recessed panel	200		PR2600			1/1
Blind recessed panel	400		PR4600			1/1
Blind recessed panel	600		PR6600			1/1
Ventilated panel	100		PA1600			1/1
Ventilated panel	200		PA2600			1/1
36 DIN mod.						
Blind panel	50	800	PC0580			1/1
Blind panel	100		PC1800			1/1
Blind panel	150		PC1580			1/1
Blind panel	200		PC2800			1/1
Blind panel	300		PC3800			1/1
Blind panel	400		PC4800			1/1
Blind panel	600		PC6800			1/1
Blind panel	800		PC8800			1/1
Blind panel (Inner door)	1600		PC1680			1/1
Blind panel (Inner door)	1800		PC1880			1/1
Blind panel (Inner door)	2000		PC2080			1/1
Blind recessed panel	200		PR2800			1/1
Blind recessed panel	400		PR4800			1/1
Blind recessed panel	600		PR6800			1/1
External cable container						
Blind panel	100	300	PC1403			1/1
Blind panel	200		PC2401			1/1
Blind panel	300		PC3401			1/1
Blind panel	400		PC4401			1/1
Blind panel	600		PC6401			1/1
Blind recessed panel	400		PR4401			1/1
Blind panel	800		PC8401			1/1

> Rapid selection table page 3/4 > In-depth technical information page 6/1 > Overall dimensions page 7/1

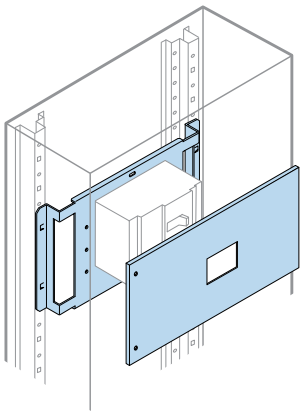

Kit for apparatus

Kit for installing Tmax moulded-case circuit-breakers

Horizontal installation (front terminals)

Description	Dimensions (mm) H	Dimensions (mm) W	Code			Package/ No. of pieces
24 DIN mod. wall-mounted/floor-mounted switchgear						
Kit T1 3/4 P fixed	200	600	LK1000			1/1
Kit T1 4 P fixed + RC mod.	200		LK1004			1/1
Kit T2 3/4 P fixed	200		LK2000			1/1
Kit T2 4 P fixed + RC mod.	200		LK2004			1/1
Kit T3 3/4 P fixed	200		LK3000			1/1
Kit T3 4 P fixed + RC mod.	300		LK3004			1/1
Kit XT1 3/4 P fixed	200		LX1000[1]			1/1
Kit XT1 4 P fixed + RC mod.	200		LX1005			1/1
Kit XT2 3/4 P fixed	200		LX2000[1]			1/1
Kit XT2 4 P fixed + RC mod.	200		LX2004			1/1
Kit XT3 3/4 P fixed	200		LX3000[1]			1/1
Kit XT3 4 P fixed + RC mod.	300		LX3004			1/1
Kit XT4 3/4 P fixed	200		LX4003			1/1
Kit XT4 4 Pfixed + RC mod.	200		LX4004			1/1
Kit T4 3/4 P fixed	200		LK4003[1]			1/1
Kit T4 4 P fixed + RC mod.	200		LK4004			1/1
Kit T5 3/4 P fixed	300		LK5003			1/1
Kit T5 4 P fixed + RC mod.	300		LK5004			1/1
24 DIN mod. floor-mounted switchgear						
Kit T3 3/4 P with divider	200	**600**	LK3301			1/1
36 DIN mod. floor-mounted switchgear						
Kit T1 3/4 P fixed	200	800	LK1100[1]			1/1
Kit T1 4 P fixed + RC mod.	200		LK1104			1/1
Kit T2 3/4 P fixed	200		LK2100			1/1
Kit T2 4 P fixed + RC mod.	200		LK2104			1/1
Kit T3 3/4 P fixed	200		LK3110[1]			1/1
Kit T3 4 P fixed + RC mod.	300		LK3104			1/1
Kit T4 3/4 P fixed	200		LK4103			1/1
Kit T4 4 P fixed + RC mod.	200		LK4104			1/1
Kit T5 3/4 P fixed	300		LK5103			1/1
Kit T5 4 P fixed + RC mod.	300		LK5104			1/1
Kit XT1 3/4 P fixed	200		LX1100			1/1
Kit XT1 4 P fixed + RC mod.	200		LX1104			1/1
Kit XT3 3/4 P fixed	200		LX3110			1/1
Kit XT3 4 P fixed + RC mod.	300		LX3104			1/1

[1] For 3 poles breakers please order accessory flange code AD3305 XT1 3P Flange for platemounting: AD3306 XT2 3P Flange for plate-mounting, AD3307 XT3 3P Flange for platemounting, AD3308 XT4 3P Flange for plate-mounting.

> Rapid selection table page 3/4 > In-depth technical information page 6/1 > Overall dimensions page 7/1

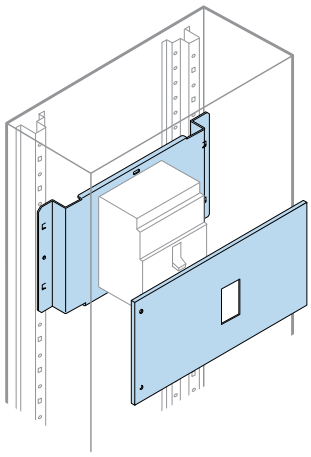

Kit for apparatus

Kit for installing Tmax moulded-case circuit-breakers

Vertical installation (front terminals)

Description	Dimensions (mm) H	W	Code			Package/ No. of pieces
24 DIN mod. wall-mounted/floor-mounted switchgear						
Kit DIN T1-T2-T3-XT1-XT3, 3/4 P	150÷600		GD…[1]			1/1
Kit No. 4 T1 3/4 P fixed + RC mod.	200		LK1001			1/1
Kit T2 3/4 P fixed	200		LK2001			1/1
Kit No. 3 T2 3/4 P fixed + RC mod.	200		LK3200			1/1
Kit T3 3/4 P fixed	300		LK3001[4]			1/1
Kit T3 4 P fixed + RC mod.	300		LK3005			1/1
Kit No. 3 T3 3/4 P side by side	300		LK3300[4]			1/1
Kit No. 4 T1 3/4 P side by side	200		LK4100[4]			1/1
Kit T4 3/4 P fixed + RC mod.	400		LK4005			1/1
Kit T4 4 P fixed + RC mod.	500		LK4006			1/1
Kit T5 3/4 poli fixed	400		LK5005			1/1
Kit T5 4 P fixed + RC mod.	500	600	LK5006			1/1
Kit XT1 3/4 P fixed	200		LX1001[4]			1/1
Kit XT1 4 P fixed + RC mod.	300		LX1006			1/1
Kit XT1 N 3 CBs side by side	200		LX4100			1/1
Kit XT2 3/4 P fixed	200		LX2001			1/1
Kit XT2 N 3/4[3] CBs side by side	200		LX3200[2]			1/1
Kit XT3 3/4 P fixed	300		LX3001			1/1
Tmax XT3 4 P P fixed + RC mod.	300		LX3005			1/1
Kit XT3 N 2 CBs side by side	300		LX3300			1/1
Kit XT4 3/4 P fixed	300		LX4005[4]			1/1
Kit XT4 4 P fixed + RC mod.	400		LX4006			1/1
Kit XT4 N 3/4[3] CBs side by side	300		LX4008[2]			1/1
24 DIN mod. floor-mounted switchgear						
Kit T6 3/4 P fixed	500	600	LK6011			1/1

CONTINUED

[1] For the selection of kit for installation on DIN rail see page 3/30.

[2] Order polished flange AD3310, AD3311, AD3312, AD3313 see page 3/11.

[3] No. 4 CBs side by side 3P, No. 3 CBs side by side 4P.

[4] For 3 poles breakers please order accessory flange code AD3305 XT1 3P Flange for platemounting: AD3306 XT2 3P Flange for plate-mounting, AD3307 XT3 3P Flange for platemounting, AD3308 XT4 3P Flange for plate-mounting.

> Rapid selection table page 3/4 > In-depth technical information page 6/1 > Overall dimensions page 7/1

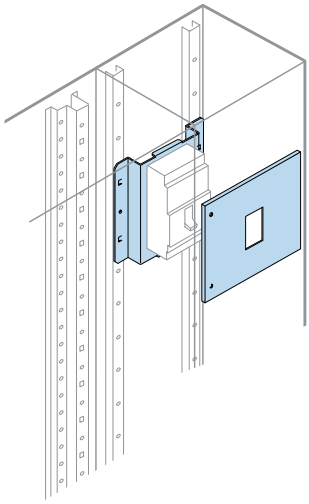

Kit for apparatus

Kit for installing Tmax moulded-case circuit-breakers

Vertical installation (front terminals)

Description	Dimensions (mm) H	W	Code			Package/ No. of pieces
36 DIN mod. floor-mounted switchgear						
Kit DIN T1-T2-T3-XT1-XT3, 3/4 P	150÷600	800	GD…[1]			1/1
Kit T1 3/4 P fixed	200		LK1101[4]			1/1
Kit No. 5 T1 3/4 P fixed + RC mod.	200		LK4108			1/1
Kit T2 3/4 P fixed	200		LK2101			1/1
Kit No. 4 T2 3/4 P side by side	200		LK3111			1/1
Kit T3 3/4 P fixed	300		LK3101[4]			1/1
Kit T3 4 P fixed + RC mod	300		LK3105			1/1
Kit No. 4 T3 3/4 P side by side	300		LK3102			1/1
Kit T4 3/4 P fixed	400		LK4105			1/1
Kit T4 4 P fixed + RC mod	500		LK4106			1/1
Kit T5 3/4 P fixed	400		LK5105			1/1
Kit T5 4 P fixed + RC mod	500		LK5106			1/1
Kit T6 3/4 P fixed	500		LK6012			1/1
Kit XT1 3/4 P fixed	200		LX1101			1/1
Kit XT1 4 P fixed + RC mod	300		LX1108			1/1
Kit XT2 3/4 P fixed	200		LX2101			1/1
Kit XT3 3/4 P fixed	300		LX3101			1/1
Kit XT3 4 P fixed + RC mod	300		LX3105			1/1
Wall-mounted external cable container						
Kit T3 3/4 P fixed	300	300	LK3003			1/1
Kit XT2 3/4 P fixed	300		LX2300			1/1
Kit XT3 3/4 P fixed	300		LX3003			1/1
Floor-mounted external cable container						
Kit T1 3/4 P fixed	200	300	LK1002			1/1
Kit T1 4 P fixed + RC mod	300		LK1008			1/1
Kit T2 3/4 P fixed	200		LK2002			1/1
Kit T2 4 P fixed + RC mod	300		LK2008			1/1
Kit T3 3/4 P fixed	300		LK3002			1/1
Kit T3 4 P fixed + RC mod	300		LK3008			1/1
Kit T4 3/4 P fixed	400		LK4007			1/1
Kit T5 3/4 P fixed	400		LK5007			1/1
Kit T5 4 P fixed + RC mod	500		LK5008			1/1
Kit XT1 3/4 P fixed	200		LX1002[4]			1/1
Kit XT1 4 P fixed + RC mod	300		LX1008			1/1
Kit XT2 3/4 P fixed	300		LX2002			1/1
Kit XT2 4 P fixed + RC mod	300		LX2008			1/1
Kit XT3 3/4 P fixed	300		LX3002[4]			1/1
Kit XT3 4 P fixed + RC mod	300		LX3008			1/1
Kit XT4 3/4 P fixed	300		LX4007[4]			1/1

[1] For the selection of kit for installation on DIN rail see page 3/30.

[2] Order polished flange AD3310, AD3311, AD3312, AD3313 see page 3/11.

[3] No. 4 CBs side by side 3P, No. 3 CBs side by side 4P.

[4] For 3 poles breakers please order accessory flange code AD3305 XT1 3P Flange for platemounting: AD3306 XT2 3P Flange for plate-mounting, AD3307 XT3 3P Flange for platemounting, AD3308 XT4 3P Flange for plate-mounting.

> Rapid selection table page 3/4 > In-depth technical information page 6/1 > Overall dimensions page 7/1

ArTu L modular structures
Ordering codes

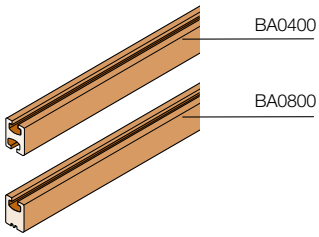

3

Distribution system

Distribution busbars with shaped section

Description	Dimensions (mm) L	Code			Package/ No. of pieces
Busbar In=400A	1730	BA0400			1/1
Busbar In=800A	1730	BA0800			1/1

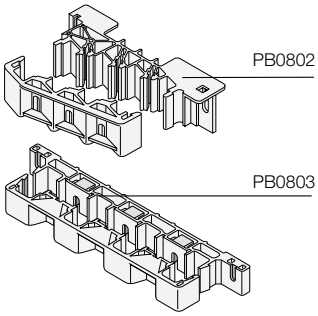

Busbar holders for busbars with shaped section

Description	Code			Package/ No. of pieces
Scaled				
Scaled busbar holder In=800A - 35kA	PB0802			1/1
Linear				
Linear busbar holder In=800A - 35kA	PB0803			1/1

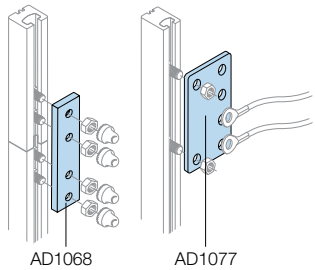

Joints for busbars with shaped section

Description	Code			Package/ No. of pieces
No. 4 copper 400A branch joints	AD1077			1/4
No. 4 joints for joining busbars with shaped section 400/800A	AD1068			1/4

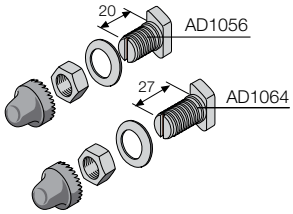

Hammer seal screws for busbars with shaped section

Description	Code			Package/ No. of pieces
No. 12 M8 screws L=20mm for cable terminal complete with screw-covering cap	AD1056			1/12
No. 12 M8 screws L=27mm for flat busbars up to 10mm, complete with screw-covering cap	AD1064			1/12

> Rapid selection table page 3/4 > In-depth technical information page 6/1 > Overall dimensions page 7/1

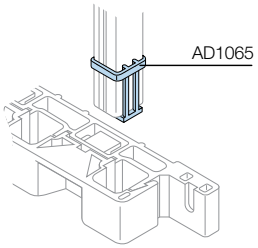

Distribution system

Resting bases for busbars with shaped section

Description	Code			Package/ No. of pieces
No. 4 resting bases for 400/800A busbars	AD1065			1/4

Crosspieces for 400/800A busbars with shaped section

Description	Mounting Pic.	Code			Package/ No. of pieces
Vertical busbars at back of structure and connection to the Unifix H system					
No. 2 Fixing crosspieces W=600mm for linear busbar holder PB0803	1	TL1000			1/2
No. 2 Fixing crosspieces W=800mm for linear busbar holder PB0803	1	TL1100			1/2
Vertical busbars at back of the external cable container or horizontal in the cable connection box					
No. 2 Fixing crosspieces W=300mm for linear busbar holder PB0803	2	TL3000			1/2
No. 2 Fixing crosspieces W=300mm for scaled busbar holder PB0802	2	TL2000			1/2
Vertical busbars at the back of the cable container internal					
No. 2 Fixing crosspieces W=200mm for scaled busbar holder PB0802	3	TL2100			1/2

Pic.1

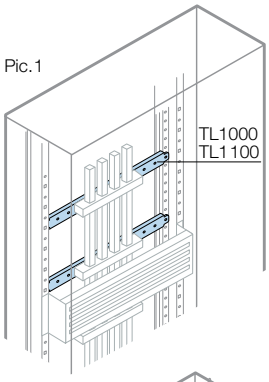

Pic.2

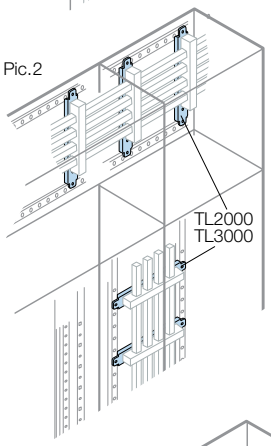

Pic.3

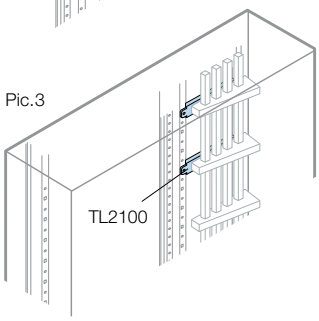

> Rapid selection table page 3/4 > In-depth technical information page 6/1 > Overall dimensions page 7/1

ArTu L modular structures
Ordering codes

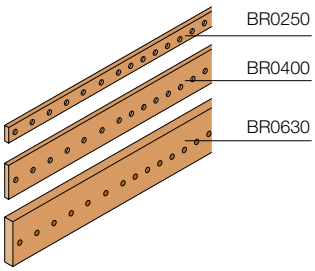

3

Distribution system

Flat busbar

Copper with 1750mm drilled length. Can be used with both linear BP0630 and scaled BP0634 busbar holder.

Description	Dimensions (mm) L	In (A)	Code			Package/ No. of pieces
No. 2 copper busbar 15x5	1750	250	BR0250			1/2
No. 2 copper busbar 25x5		400	BR0400			1/2
No. 2 copper busbar 30x10		630	BR0630			1/2

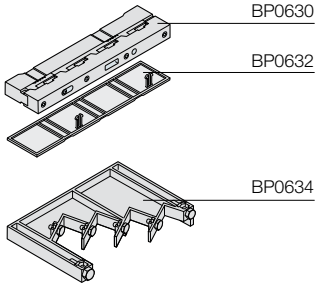

Busbars holders

Busbar holders made of insulating self-extinguishing material, certified in conformity with the EN 60439-1 Standard for Icc≤35kA.

Description	Code			Package/ No. of pieces
No. 2 linear busbar holders In=630A - 32kA	BP0630			1/1
No. 2 terminal covers for linear busbar holders BP0630	BP0632			1/1
No. 2 scaled busbar holder In=630A - 23kA	BP0634			1/1

Fig. 1

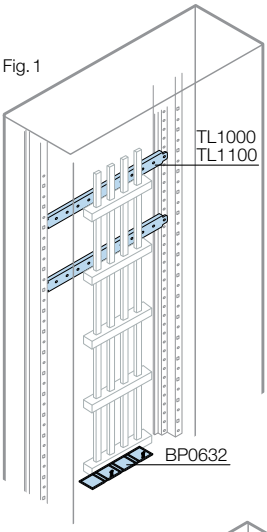

Crosspieces for flat busbars

Description	Mounting Pic.	Code			Package/ No. of pieces
Busbar vertically on back of structure or of cable container					
No. 2 crosspieces back of structure W=600mm with BP0630	1	TL1000			1/2
No. 2 crosspieces back of structure W=800mm with BP0630	1	TL1100			1/2
Busbars vertically on back of external cable container or horizontally in cable connection box					
No. 2 crosspieces back of cable container W=300mm with BP0630 or scaled BP0634	2	TL3000			1/2

Fig. 2

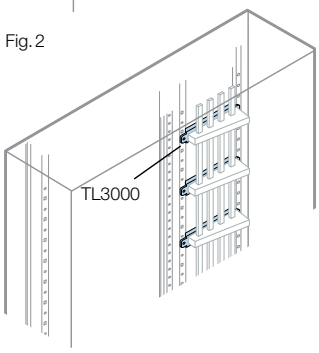

> Rapid selection table page 3/4 > In-depth technical information page 6/1 > Overall dimensions page 7/1

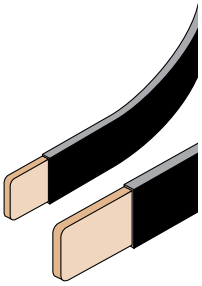

Distribution system

Flexible busbars

Flexible busbars insulated with self-extinguishing material.

Description	Dimensions (mm) L	In (A)	Code			Package/ No. of pieces
No. 2 flexible busbars, section 20x3	2000	250	BF1602			1/2
No. 2 flexible busbars, section 20x5		400	BF2502			1/2
No. 2 flexible busbars, section 24x6		500	BF4002			1/2
No. 2 flexible busbars, section 32x5		630	BF4012 [1]			1/2

[1] Only for circuit-breakers with front extended terminals or rear terminals

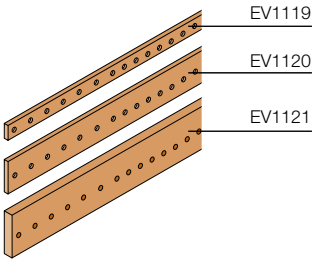

Earthing busbars

Copper busbars drilled and threaded for rapid connection of the conductors.

Description	Dimensions (mm) L	Code			Package/ No. of pieces
No. 2 earthing busbars 20x5 threaded M6	2000	EV1119			1/2
No. 2 earthing busbars 25x5 threaded M6		EV1120			1/2
No. 2 earthing busbars 50x5 threaded M6		EV1121			1/2

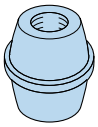

Insulators and copper busbars for neutral/earthing

Description	Code			Package/ No. of pieces
No. 50 hexagonal insulators 30x30mm	EV1122			1/50
No. 50 hexagonal insulators 30x30mm	EV1123			1/50
No. 25 hexagonal insulators 36x50mm	EV1124			1/25
No. 25 hexagonal insulators 36x50mm	EV1125			1/25

> Rapid selection table page 3/4 > In-depth technical information page 6/1 > Overall dimensions page 7/1

ArTu L modular structures
Ordering codes

3

Type A

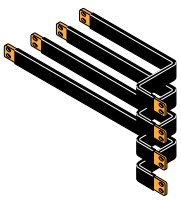

Type B

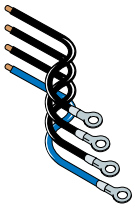

Mounting 1

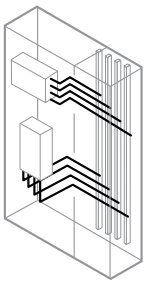

Mounting 2

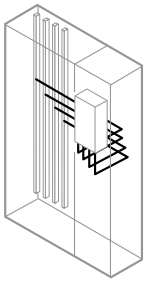

Mounting 3

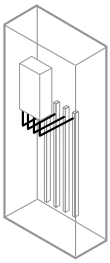

Mounting 4

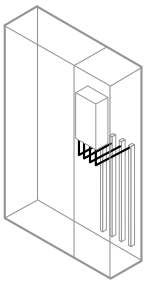

Distribution system

Prefabricated kit for connection between apparatus and busbars with shaped section 400/800A

Position Tmax/busbar	Mounting Type	Mounting Position	Code			Package/ No. of pieces
Wall-mounted/floor-mounted switchgear - Horizontal circuit-breaker						
T1 -T2 in the struc. and busbars in the cable cont.	B	1	KB1001 [1]			1/1
Floor-mounted switchgear - Horizontal circuit-breaker						
T3 in the structure and busbars in the cable cont.	B	1	KB1002			1/1
T5 in the structure and busbars in the cable cont.	B	1	KB1020			1/1
T5 in the structure and busbars in the cable cont.	B	1	KB1021			1/1
Wall-mounted/floor-mounted switchgear - Vertical circuit-breaker						
T3 in the structure and busbars in the cable container	B	1	KB1006			1/1
T3 in the cable container and busbars in the structure	B	1	KB1010			1/1
Resid. current T3 in the cable cont. and busb. in the structure	B	2	KB1019			1/1
T3 in the structure/cable container and busbars at back	B	2	KB1014 [2]			1/1
T3 in the structure/cable container busbars at back	B	2	KB1018 [2]			1/1
Floor-mounted switchgear - Vertical circuit-breaker						
T5 and T5 resid.cur. in the struc. and busb. in the cable cont.	A	3-4	KB1022			1/1
Resid. current T5 and T5 in the cab. cont. and bus. in the structure	A	3-4	KB1024			1/1

[1] For Tmax T1 fit the circuit-breaker with extended terminals.

[2] Only with flat busbars and scaled busbar holder.

> Rapid selection table page 3/4 > In-depth technical information page 6/1 > Overall dimensions page 7/1

Distribution system

Unifix H

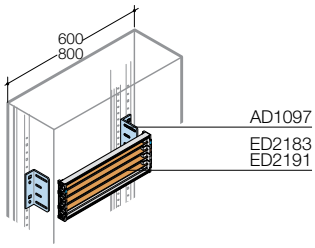

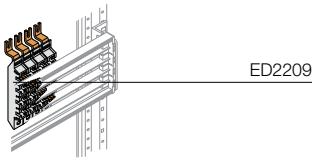

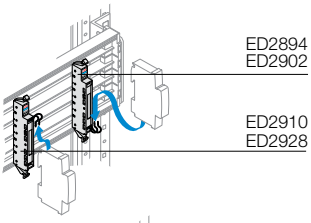

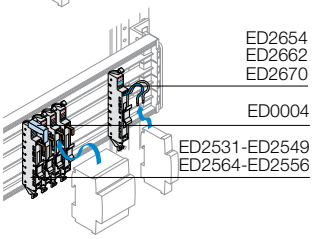

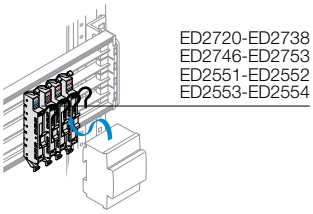

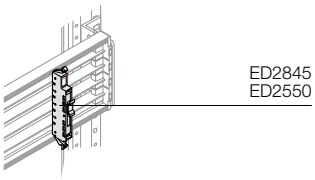

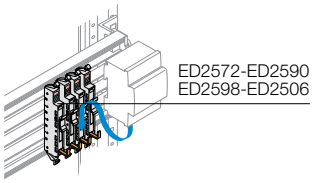

Description	Dimensions (mm) W	Code			Package/ No. of pieces
Frames for Tmax					
Frame with 24 DIN module busbar	600	ED2183			1/1
Frame with 36 DIN module busbar	800	ED2191			1/1
No. 2 fixing brackets onto the structure for ED2183 or ED2091		AD1097			1/2
Feeder modules					
4P 400A feeder module (for ED2183-ED2191)		ED2209			1/1
Basic modules I_n 16A					
Basic module for DIN L1-N top 16A		ED2894			1/1
Basic module for DIN L1-L2 top 16A		ED2902			1/1
Basic module for DIN L1-N bottom 16A		ED2910			1/1
Basic module for DIN L1-L2 bottom 16A		ED2928			1/1
Basic modules I_n 40A					
Basic module L1/Neutral top 40A		ED2654			1/1
Basic module L2/Neutral top 40A		ED2662			1/1
Basic module L3/Neutral top 40A		ED2670			1/1
Basic modules I_n 63A					
Basic module L1 top 63A		ED2531			1/1
Basic module L2 top 63A		ED2549			1/1
Basic module L3 top 63A		ED2556			1/1
Basic module Neutral top 63A		ED2564			1/1
Basic module L1 bottom 63A		ED2572			1/1
Basic module L2 bottom 63A		ED2590			1/1
Basic module L3 bottom 63A		ED2598			1/1
Basic module Neutral bottom 63A		ED2606			1/1
Basic modules I_n 100A					
Basic module with cable L1 top 100A		ED2720			1/1
Basic module with cable L2 top 100A		ED2738			1/1
Basic module with cable L3 top 100A		ED2746			1/1
Basic module with cable Neutral top 100A		ED2753			1/1
Basic modules ≤ I_n 40A S800					
Basic module L1 top ≤40A		ED2557			1/1
Basic module L2 top ≤40A		ED2558			1/1
Basic module L3 top ≤40A		ED2559			1/1
Basic module Neutral top ≤40A		ED2560			1/1
Basic modules ≤ I_n 125A S800					
Basic module L1 top 125A		ED2551			1/1
Basic module L2 top 125A		ED2552			1/1
Basic module L3 top 125A		ED2553			1/1
Basic module Neutral bottom 125A		ED2554			1/1
Basic module false pole W=27mm		ED2550			1/1

> Rapid selection table page 3/4 > In-depth technical information page 6/1 > Overall dimensions page 7/1

ArTu L modular structures
Ordering codes

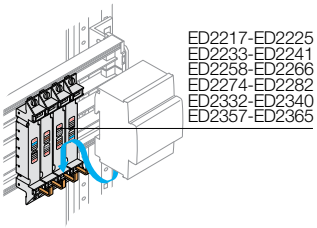

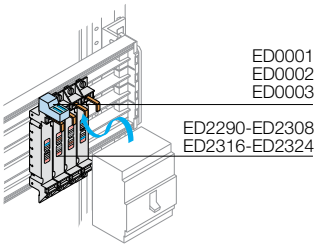

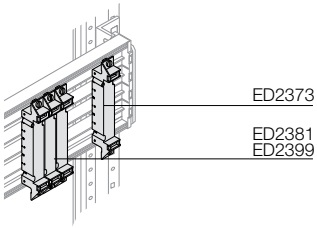

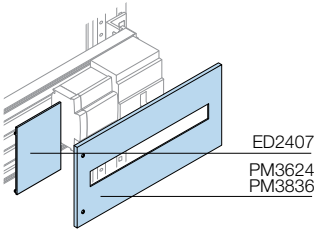

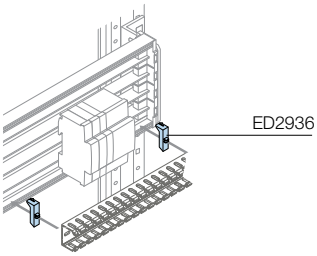

Distribution system
Unifix H

Description	Code			Package/ No. of pieces
Basic modules ≤ I_n 160A Tmax T1, Tmax XT1				
Basic module L1 top L2 bottom	ED2217			1/1
Basic module L2 top L1 bottom	ED2225			1/1
Basic module L3 top Neutral bottom	ED2233			1/1
Basic module Neutral top L3 bottom	ED2241			1/1
Basic module false pole for residual current release RC221	ED2373			1/1
Basic module false pole for solenoid operator	ED2381			1/1
Basic modules ≤ I_n 160A Tmax T2				
Basic module L1 top L2 bottom	ED2258			1/1
Basic module L2 top L1 bottom	ED2266			1/1
Basic module L3 top N bottom	ED2274			1/1
Basic module N top L3 bottom	ED2282			1/1
Basic module false pole for residual current release RC221	ED2373			1/1
Basic module false pole for solenoid operator	ED2399			1/1
Basic modules ≤ I_n 250A Tmax T3, Tmax XT3				
Basic module L1 top	ED2290			1/1
Basic module L2 top	ED2308			1/1
Basic module L3 top	ED2316			1/1
Basic module N top	ED2324			1/1
Basic module L1 bottom	ED2332			1/1
Basic module L2 bottom	ED2340			1/1
Basic module L3 bottom	ED2357			1/1
Basic module N bottom	ED2365			1/1
Basic module false pole for residual current release RC221	ED2373			1/1
Accessories				
Basic module false pole for DDA	ED2845			1/1
Basic module false pole for modular MDRC	ED2852			1/1
No. 2 IP20 covers (for ED2183-ED2191) W=173mm (10 DIN modules)	ED2407			1/2
No. 6 duct supports 40x60mm (only for modular apparatus)	ED2936			1/6
Modular front panel 300x600mm (HxL)	PM3624			1/1
Modular front panel 300x800mm (HxL)	PM3836			1/1
Spare parts				
No. 10 terminal covers for T1	ED0001			1/10
No. 10 terminal covers for T2	ED0002			1/10
No. 10 terminal covers for T3	ED0003			1/10
No. 10 terminal covers for S200/F200	ED0004			1/10

> Rapid selection table page 3/4 > In-depth technical information page 6/1 > Overall dimensions page 7/1

Distribution system

Unifix L

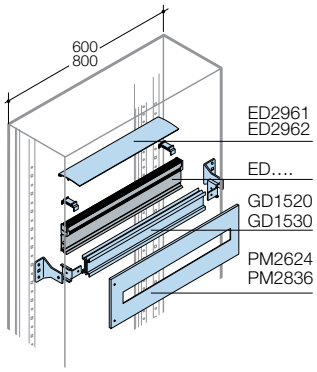

2 poles 4 poles

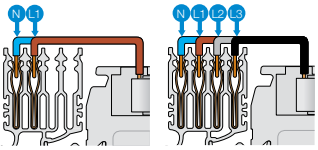

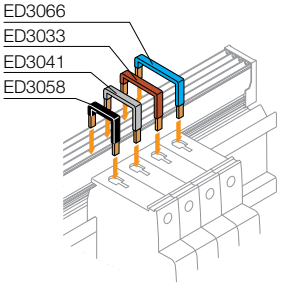

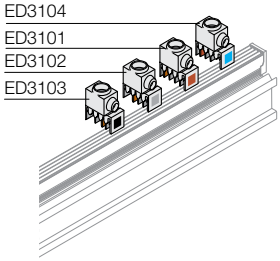

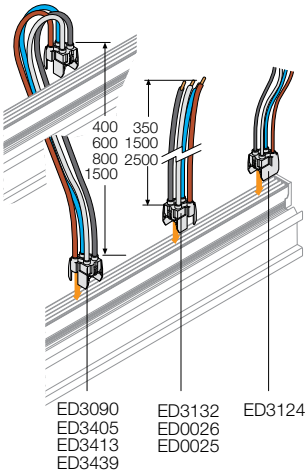

Description	Dimensions W (mm)	Code			Package/ No. of pieces
2-pole busbars					
100A 2P 8 module busbar	200	ED2985			1/6
100A 2P 12 module busbar	400	ED2993			1/6
100A 2P 18 module busbar	450	ED3009			1/6
100A 2P 24 module busbar	600	ED3017			1/6
100A 2P 36 module busbar	800	ED3025			1/6
4-pole busbars					
100A 4P 12 module busbar	400	ED2944			1/6
100A 4P 18 module busbar	450	ED2951			1/6
100A 4P 24 module busbar	600	ED2969			1/6
100A 4P 36 module busbar	800	ED2977			1/6
Connections for various apparatus					
Connection with 2 conductors L/N 16A		ED3108			1/6
Connection with 3 conductors L1/L2/L3 16A		ED3116			1/6
Connection with 4 conductors L1/L2/L3/N 16A single phase		ED3124			1/6
Connection with 2 conductors L1/N 40A		ED3355			1/6
Connection with 3 conductors L1/L2/L3 40A		ED3363			1/6
Connection with 4 conductors L1/L2/L3/N 40A		ED3371			1/6
Connections for apparatus					
No. 10 connections L1-N 40 A		ED3272			1/10
No. 10 connections L2-N 40 A		ED3280			1/10
No. 10 connections L3-N 40 A		ED3298			1/10
No. 10 connections L 1 100A		ED3033			1/10
No. 10 connections L 2 100A		ED3041			1/10
No. 10 connections L 3 100A		ED3058			1/10
No. 10 connections N 100A		ED3066			1/10
Feeder with 4P 100A cable (W=350mm)		ED3132			1/10
Feeder with 4P 100A cable (W=1500mm)		ED0026			1/10
Feeder with 4P 100A cable (W=1500mm)		ED0025			1/10
Power supply modules with cable					
Parallel module 2P 100A with cable (W=600mm)		ED3082			1/6
Parallel module 4P 100A with cable (W=400mm)		ED3405			1/6
Parallel module 4P 100A with cable (W=600mm)		ED3090			1/6
Parallel module 4P 100A with cable (W=800mm)		ED3413			1/6
Parallel module 4P 100A with cable (W=1500mm)		ED3439			1/6
Power supply modules without cable In 100A					
No. 10 single-pole power supply terminals L1		ED3101			1/10
No. 10 single-pole power supply terminals L2		ED3102			1/10
No. 10 single-pole power supply terminals L3		ED3103			1/10
No. 10 single-pole power supply terminals N		ED3104			1/10
Accessories					
N°10 busbar covers (W=600mm)		ED2961			1/10
N°2 busbar covers (W=800mm)		ED2962			1/2
DIN rail Kit and supports (W=600mm)		GD1520			1/1
DIN rail Kit and supports (W=800mm)		GD1530			1/1
Modular front panel 200x600mm (HxW)		PM2624			1/1
Modular front panel 200x800mm (HxW)		PM2836			1/1

> Rapid selection table page 3/4 > In-depth technical information page 6/1 > Overall dimensions page 7/1

ArTu L modular structures
Ordering codes

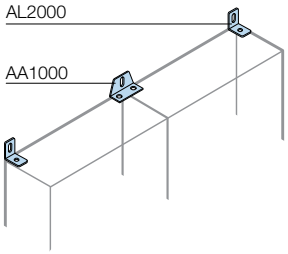

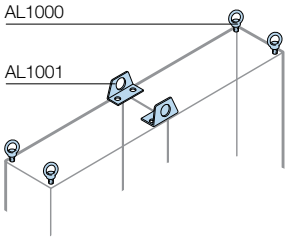

Rinforzato

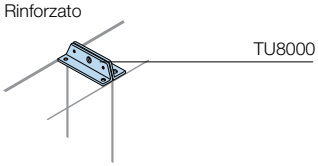

Accessories

Brackets for wall fixing

Description	Code			Package/ No. of pieces
No. 2 brackets for wall fixing	AL2000			1/2
Bracket for wall fixing of 2 side-by-side structures	AA1000			1/1

For the wall-mounted version, order 2 x AL2000.

Eyebolts and lifting reinforcements

Description	Code			Package/ No. of pieces
No. 4 M8 steel eyebolts	AL1000			1/4
No. 2 lifting reinforcements for side-by-side structures W=300/600mm	AL1001			1/2
No. 2 lifting/coupling reinforcements	TU8000			1/2

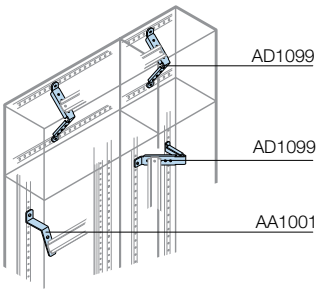

Supports for terminal boxes

Description	Code			Package/ No. of pieces
Structure				
No. 2 supports for horizontal 45° angled terminal box	AA1001			1/2
Cable container				
No. 2 supports for vertical terminal box in external cable container or horizontal in the cable connection box	AD1099			1/2
No. 2 supports for vertical terminal box in internal cable container	AD1005			1/2

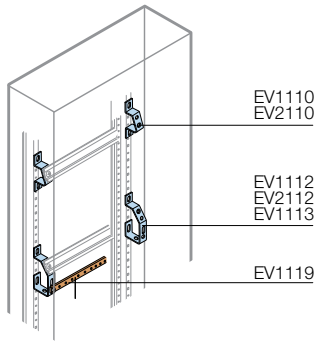

Angled supports for terminal boxes and earthing busbars

Description	Code			Package/ No. of pieces
No. 50 angled supports 1 row of terminals	EV1110			1/50
No. 10 angled supports 1 row of terminals	EV2110			1/10
No. 50 angled supports 1 row of terminals + earth	EV1112			1/50
No. 10 angled supports 1 row of terminals + earth	EV2112			1/10
No. 2 angled supports 1 row of terminals + earth	EV1113			1/2

> Rapid selection table page 3/4 > In-depth technical information page 6/1 > Overall dimensions page 7/1

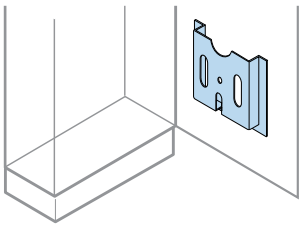

Accessories

Diagram holder pocket

The diagram holder pocket (made of RAL 2004 colour plastic, dim. HxL 237x265mm type A4) is applied to the inside of doors/blind panels of suitable size using the adhesive provided.

Description	Code			Package/ No. of pieces
Plastic diagram pocket	AA5600			1/1

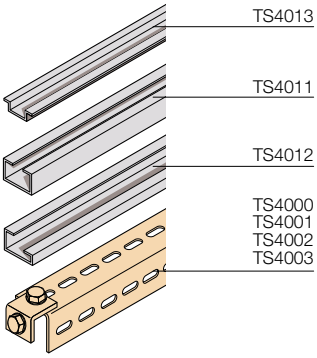

Sections for accessories

Description	Dimensions (mm) L	Code			Package/ No. of pieces
No. 2 sections EN50024 C30	2000	TS4011			1/2
No. 2 sections EN50035 G32	2000	TS4012			1/2
No. 2 DIN sections EN50022	2000	TS4013			1/2
No. 2 cable rails	600	TS4000			1/2
No. 2 cable rails	800	TS4001			1/2
No. 2 cable rails	1000	TS4002			1/2
No. 2 cable rails	1200	TS4003			1/2

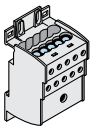
AD1080

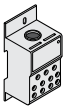
AD1081

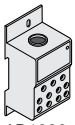
AD1030
AD1031

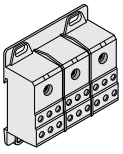
AD1075
AD1006

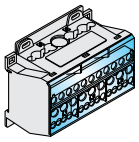
AD1004

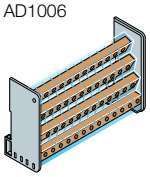
AD1028
AD1029

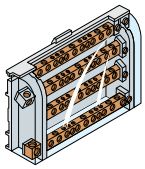
AD1027

Dividers

Description		Code			Package/ No. of pieces
Single-pole					
Modular 125A	UL	AD1076 (1)			1/1
Modular 125A	UL	AD1080 (2)			1/1
Modular 175A	UL	AD1007 (1)			1/1
Modular 175A	UL	AD1081 (2)			1/1
Modular 250A	UL	AD1030			1/1
Modular 125A	UL	AD1031			1/1
Modular 160A	UL	AD1027			1/1
Three-pole					
Modular 125A	UL	AD1075			1/1
Modular 175A	UL	AD1006			1/1
Four-pole					
Modular 125A		AD1004			1/1
Modular 125A-medium-93x89x48 (HxLxP)		AD1028			1/1
Modular 125A-large-96x126x48 (HxLxP)		AD1029			1/1
Modular 160A		AD1027			1/1
Horizontal 250A for structures W=600mm		AD1034			1/1
Horizontal 250A for structures W=800mm		AD1053			1/1

(1) 10 outputs - (2) 6 outputs

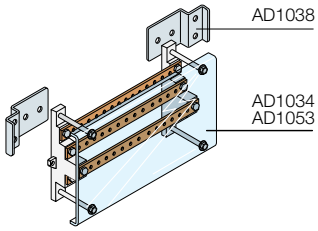

Amounting accessories

Description	Code			Package/ No. of pieces
Supports for fixing to the structure for AD1034 and AD1053	AD1038			1/1
Connection accessory between two AD1080	AD1083			1/1

> Rapid selection table page 3/4 > In-depth technical information page 6/1 > Overall dimensions page 7/1

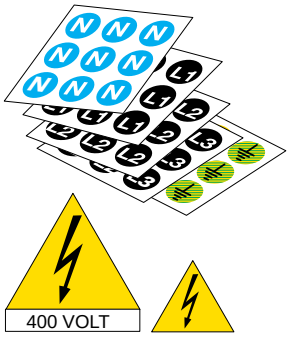

Accessories

Marking

Description	Code			Package/ No. of pieces
No. 490 adhesive labels ø12mm symbol N	EV1150			1/490
No. 490 adhesive labels ø12mm symbol L1	EV1151			1/490
No. 490 adhesive labels ø12mm symbol L2	EV1152			1/490
No. 490 adhesive labels ø12mm symbol L3	EV1153			1/490
No. 490 adhesive labels ø12mm symbol T	EV1154			1/490
No. 10 triangular adhesive labels 125mm with 400V lightning arrow symbol	EV1155			1/10
No. 300 triangular adhesive labels 50mm with lightning arrow symbol	EV1156			1/300

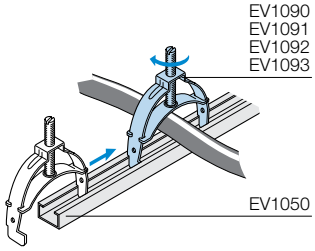

Brackets for anchoring cables

Adjustable cable blocking bracket can be mounted on sections with 10mm slot EV1050.

Description	Code			Package/ No. of pieces
No. 10 cable blocking brackets min÷max ø 9÷16mm	EV1090			1/10
No. 10 cable blocking brackets min÷max ø 16÷30mm	EV1091			1/10
No. 5 cable blocking brackets min÷max ø 30÷48mm	EV1092			1/5
No. 5 cable blocking brackets min÷max ø 48÷72mm	EV1093			1/5

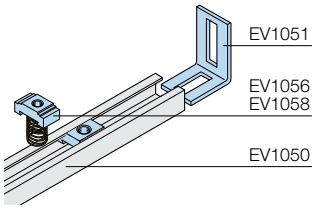

Aluminium sliding guides for universal uses

Description	Code			Package/ No. of pieces
No. 10 aluminium supporting sections 30x15 - W=2000mm	EV1050			1/10
No. 25 fixing brackets for EV1050	EV1051			1/25
No. 100 aluminium M6 nuts for EV1050	EV1056			1/100
No. 100 aluminium M8 nuts for EV1050	EV1058			1/100

> Rapid selection table page 3/4 > In-depth technical information page 6/1 > Overall dimensions page 7/1

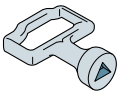
AA1560

AA6120

AA6200

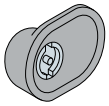
EV1008

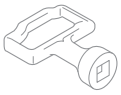

AA6140

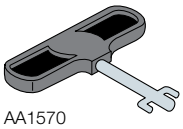
AA1570

AA6160

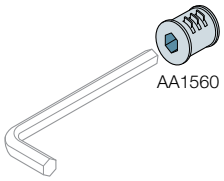
AA1560

Accessories

Insert and keys

Description	Code			Package/ No. of pieces
Wall-mounted structures and cable container				
Box for closing doors with double-tab insert	EV1008			1/1
ArTu W wall-mounted insert + Yale type key	EV1036			1/1
Ronis 455 Insert + key for EV1008	EV1037			1/1
3mm double-tab insert + key for EV1008	EV1039			1/1
Floor-mounted structures				
Double-tab insert	AA6100			1/1
Double-tab Zn+Al+Mg alloy key	AD1058			1/1
Yale insert + key	AA6200			1/1
Male 6.4 triangular insert on ø 7.6	AA6120			1/1
Triangular key	AA1560			1/1
Male 7square type insert; key not available	AA6140			1/1
Hexagonal 8 type insert embedded; key not available	AA6180			1/1
FIST type insert (FIAT)	AA6160			1/1
Fiat key	AA1570			1/1
Ronis E739 insert + key	AA8004			1/1

Ricambi

Description	Code			Package/ No. of pieces
No. 10 hinges + screws for panels (spare part ACP468)	AD1090			1/10
No. 10 plug + door key kits (spare part APT002)	AD1091			1/10
ArTu handle complete with lock and cover	AD1022			1/1
No. 10 Artu handle covers	AD1070			1/10
No. 50 three-lobed M6 spare screws	AD1033			1/50
No. 20 cage nuts	AD1036			1/20
Spray paint for touching up RAL 7035 colour (400 ml can)	VB7035			1/1
Polished flange for XT1 3P mounted on DIN rail	AD3301			1/1
Polished flange for XT1 4P mounted on DIN rail	AD3302			1/1
Polished flange for XT3 3P mounted on DIN rail	AD3303			1/1
Polished flange for XT3 4P mounted on DIN rail	AD3304			1/1

> Rapid selection table page 3/4 > In-depth technical information page 6/1 > Overall dimensions page 7/1

ArTu L modular structures
Examples of configurations

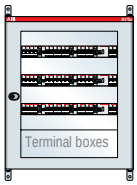

3

ArTu L dim.800x600x165 (850x690x204) mm (external hxwxd) IP43 with modular panels

Code	Description	Q.ty
SL0800	Back structure 800x700x200mm (hxwxd)	1
MC0800	Blind riser h=800mm	1
PV0800	Glass door for structure h=800mm	1
AL2000	No.2 wall fixing brackets L	2
PM6672	Panel 72 mod.600x600mm (hxw) M, K	1
PC2600	Plain panel 200x600mm (hxw) M, K	1
GD1520	DIN rail, pitch 150/200mm	3

> Rapid selection table page 3/4 > In-depth technical information page 6/1 > Overall dimensions page 7/1

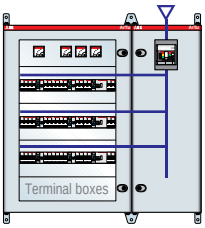

ArTu L dim.1000x900x165 (1050x1080x204) mm (external hxwxd) IP43 with cable container, plate for Tmax T3-XT3, modular panels Icw 16kA complete with busbar holder, 250A busbars and Unifix L

Code	Description	Q.ty	Code	Description	Q.ty
Tmax T kit			**Tmax XT kit**		
SL1000	Back structure 1000x700x200mm (hxwxd)	1	SL1000	Back structure 1000x700x200mm (hxwxd)	1
MC1000	Blind riser h=1000mm	1	MC1000	Blind riser h=1000mm	1
PV1000	Glass door for structure h=1000mm	1	PV1000	Glass door for structure h=1000mm	1
PC2600	Plain panel 200x600mm (hxw) M, K	1	PC2600	Plain panel 200x600mm (hxw) M, K	1
PM2624	Panel 24 mod.200x600mm (hxw) M, K	3	PM2624	Panel 24 mod.200x600mm (hxw) M, K	3
PS4720	Panel 4 strum.72x72 200x600mm (hxw) M, K	1	PS4720	Panel 4 strum.72x72 200x600mm (hxw) M, K	1
MI1000	Riser CB side-by-side structures h=1000mm	1	MI1000	Riser CB side-by-side structures h=1000mm	1
VC1000	Cable container h=1000mm	1	VC1000	Cable container h=1000mm	1
PC1002	Blind door for cable container h=1000mm	1	PC1002	Blind door for cable container h=1000mm	1
LK3003	Kit wallT3 vert. in cable cont.	1	LX3003	Kit XT3 3/4 P vert. in cable cont. L wall	1
PC6401	Plain panel h=600mm	1	PC6401	Plain panel h=600mm	1
PC1403	Plain panel h=100mm	1	PC1403	Plain panel h=100mm	1
TL3000	Linear crosspiece for cable container	3	TL3000	Linear crosspiece for cable container	3
BP0630	No. 2 flat busbar holders 250-630A	2	BP0630	No.2 flat busbar holders 250-630A	2
BR0250	No. 2 flat busbars 250A	1	BR0250	No.2 flat busbars 250A	1
AL2000	No. 2 wall fixing brackets L	2	AL2000	No.2 wall fixing brackets L	2
AA1000	No. 2 fixing brackets wall side-by-side structures	1	AA1000	No.2 fixing brackets wall side-by-side structures	1
ED2969	4P busbar 24 modules	3	ED2969	4P busbar 24 modules	3
ED3132	Feeder+cable l=350mm 4P 100A	3	ED3132	Feeder+cable l=350mm 4P 100A	3
ED....[1]	Connection L 1-L2-L3-N		ED....[1]	Connection L 1-L2-L3-N	
GD1520	DIN rail, pitch 150/200mm	3	GD1520	DIN rail, pitch 150/200mm	3
AD1096	No. 4 horz./vert. wall wirimg duct metal support	1	AD1096	No. 4 horz./vert. wall wirimg duct metal support	1
GD1520	Din rail, pitch 150/200mm	3	GD1520	Din rail, pitch 150/200mm	3

[1] For selection of the connection according to the circuit-breaker, see page 3/19.

> Rapid selection table page 3/4 > In-depth technical information page 6/1 > Overall dimensions page 7/1

ArTu L modular structures
Examples of configurations

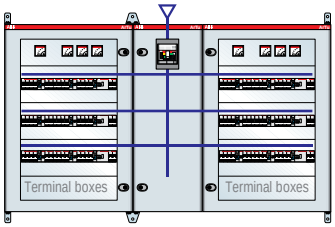

3

ArTu L Series dim.1000x1500x165 (1050x1770x204) mm (external hxwxd) IP43 with cable container, plate for Tmax T3-XT3, modular panels Icw 16kA complete with busbar holder, 250A busbars and Unifix L

Code	Description	Q.ty	Code	Description	Q.ty
Tmax T kit			**Tmax XT kit**		
SL1000	Back structure 1000x700x200mm (hxwxd)	2	SL1000	Back structure 1000x700x200mm (hxwxd)	2
MC1000	Blind riser h=1000mm	1	MC1000	Blind riser h=1000mm	1
PV1000	Glass door for structure h=1000mm	2	PV1000	Glass door for structure h=1000mm	2
PC2600	Plain panel 200x600mm (hxw) M, K	2	PC2600	Plain panel 200x600mm (hxw) M, K	2
PM2624	Panel 24 mod.200x600mm (hxw) M, K	6	PM2624	Panel 24 mod.200x600mm (hxw) M, K	6
PS4720	Panel 4 strum.72x72 200x600mm (hxw) M, K	2	PS4720	Panel 4 strum.72x72 200x600mm (hxw) M, K	2
MI1000	Riser CB side-by-side structures h=1000mm	2	MI1000	Riser CB side-by-side structures h=1000mm	2
VC1000	Cable container h=1000mm	1	VC1000	Cable container h=1000mm	1
PC1002	Blind door for cable container h=1000mm	1	PC1002	Blind door for cable container h=1000mm	1
LK3003	Kit wall T3 vert. in cable cont.	1	LX3003	Kit XT3 3/4 P vert. in cable cont. L wall	1
PC6401	Plain panel h=600mm	1	PC6401	Plain panel h=600mm	1
PC1403	Plain panel h=100mm	1	PC1403	Plain panel h=100mm	1
AL2000	No. 2 wall fixing brackets L	2	AL2000	No.2 wall fixing brackets L	2
AA1000	No. 2 fixing brackets wall side-by-side structures	2	AA1000	No.2 fixing brackets wall side-by-side structures	2
GD1520	DIN rail, pitch 150/200mm	6	GD1520	DIN rail, pitch 150/200mm	6
ED2969	4P busbar 24 modules	6	ED2969	4P busbar 24 modules	6
ED3132	Feeder+cable l=350mm 4P 100A	6	ED3132	Feeder+cable l=350mm 4P 100A	6
ED....(*)	Connection L 1-L2-L3-N		ED....(*)	Connection L 1-L2-L3-N	
TL3000	Linear crosspiece for cable container	3	TL3000	Linear crosspiece for cable container	3
BP0630	No. 2 flat busbar holders 250-630A	2	BP0630	No.2 flat busbar holders 250-630A	2
BR0250	No. 2 flat busbars 250A	1	BR0250	No.2 flat busbars 250A	1
AD1096	No. 4 horz./vert. wall wirimg duct metal support	2	AD1096	No.4 horz./vert. wall wirimg duct metal support	2

(*) For selection of the connection according to the circuit-breaker, see page 3/19.

> Rapid selection table page 3/4 > In-depth technical information page 6/1 > Overall dimensions page 7/1

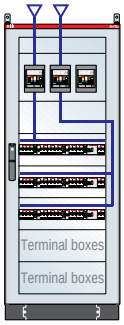

ArTu L Series dim.1600x600x195 (1750x690x240) mm (external hxwxd) IP43 with plate for No. 3 Tmax T3-XT3, modular panels, 250A divider and Unifix L

Code	Description	Q.ty	Code	Description	Q.ty
Tmax T kit			**Tmax XT kit**		
SL1600	Back structure 1600x700x240mm (hxwxd)	1	SL1600	Back structure 1600x700x240mm (hxwxd)	1
ZL1000	Base strips for structure	1	ZL1000	Base strips for structure	1
ZL1001	Structure flanges	1	ZL1001	Structure flanges	1
MC1600	Blind riser h=1600mm	1	MC1600	Blind riser h=1600mm	1
PV1600	Glass door for structure h=1600mm	1	PV1600	Glass door for structure h=1600mm	1
LK3300	Kit floor for No. 3 T3 side-by-side	1	LX3300	Kit No.3 XT3 side-by-side L floor	1
PM2624	Panel 24 mod.200x600mm (hxw) M, K	3	PM2624	Panel 24 mod.200x600mm (hxw) M, K	3
PC2600	Plain panel 200x600mm (hxw) M, K	3	PC2600	Plain panel 200x600mm (hxw) M, K	3
PC1600	Plain panel 100x600mm (hxw) M, K	1	PC1600	Plain panel 100x600mm (hxw) M, K	1
AL2000	No. 2 wall fixing brackets L	1	AL2000	No.2 wall fixing brackets L	1
AD1034	Horiz. busbar Kit 250A l=600mm	1	AD1034	Horiz. busbar Kit 250A l=600mm	1
AD1038	No. 2 divider fixing brackets AD1034	1	AD1038	No.2 divider fixing brackets AD1034	1
ED2969	4P busbar 24 modules	3	ED2969	4P busbar 24 modules	3
ED3132	Feeder+cable l=350mm 4P 100A	1	ED3132	Feeder+cable l=350mm 4P 100A	1
GD1520	Feeder+cable l=600mm parallel 4P 100A	3	GD1520	Feeder+cable l=600mm parallel 4P 100A	3
ED3090	No. 4 floor wiring duct supports	2	ED3090	No.4 floor wiring duct supports	2
AD1098	No.4 floor wiring duct supports	2	AD1098	No.4 floor wiring duct supports	2

(*) For selection of the connection according to the circuit-breaker, see page 3/19.

> Rapid selection table page 3/4 > In-depth technical information page 6/1 > Overall dimensions page 7/1

ArTu L modular structures
Examples of configurations

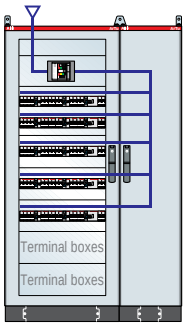

3

ArTu L Series dim.1600x900x195 (1750x1080x240) mm (external hxwxd) IP43 with cable container, plate for Tmax T3-XT3, modular panels Icw 25kA complete with busbar holder, 400A busbars, connections to the circuit-breaker, Unifix H and L

Code	Description	Q.ty	Code	Description	Q.ty
Tmax T kit			**Tmax XT kit**		
SL1600	Back structure 1600x700x240mm (hxwxd)	1	SL1600	Back structure 1600x700x240mm (hxwxd)	1
ZL1000	Base strips for structure	1	ZL1000	Base strips for structure	1
ZL1001	Structure flanges	1	ZL1001	Structure flanges	1
MC1600	Blind riser h=1600mm	1	MC1600	Blind riser h=1600mm	1
PV1600	Glass door for structure h=1600mm	1	PV1600	Glass door for structure h=1600mm	1
PC1600	Plain panel 100x600mm (hxw) M, K	1	PC1600	Plain panel 100x600mm (hxw) M, K	1
LK3000	T3 floor/wall Kit horiz.3/4P	1	LX3300	XT3 floor/wall Kit horiz.3/4P	1
PM3648	Panel 48 mod.300x600mm (hxw) M, K	1	PM3648	Panel 48 mod.300x600mm (hxw) M, K	1
PM2624	Panel 24 mod.200x600mm (hxw) M, K	3	PM2624	Panel 24 mod.200x600mm (hxw) M, K	3
PC2600	Plain panel 200x600mm (hxw) M, K	2	PC2600	Plain panel 200x600mm (hxw) M, K	2
MI1600	Riser CB side-by-side structures h=1600mm	1	MI1600	Riser CB side-by-side structures h=1600mm	1
ZL3000	Base strips for side-by-side ass.	1	ZL3000	Base strips for side-by-side ass.	1
VC1600	Cable container h=1600mm	1	VC1600	Cable container h=1600mm	1
ZL2001	Cable container flanges	1	ZL2001	Cable container flanges	1
PC1602	Blind door for cable container h=1600mm	1	PC1602	Blind door for cable container h=1600mm	1
AL2000	No. 2 wall fixing brackets L	1	AL2000	No. 2 wall fixing brackets L	1
AA1000	No. 2 fixing brackets wall side-by-side structures	1	AA1000	No. 2 fixing brackets wall side-by-side structures	1
ED2969	4P busbar 24 modules	3	ED2969	4P busbar 24 modules	3
ED3132	Feeder+cable l=350mm 4P 100A	1	ED3132	Feeder+cable l=350mm 4P 100A	1
GD1520	DIN rail, pitch 150/200mm	3	GD1520	DIN rail, pitch 150/200mm	3
ED3090	Feeder+cable l=600mm parallel 4P 100A	2	ED3090	Feeder+cable l=600mm parallel 4P 100A	2
TL2000	Scaled crosspiece x cable container	4	TL2000	Scaled crosspiece x cable container	4
PB0802	Scaled busbar holder In=800A (35 kA)	2	PB0802	Scaled busbar holder In=800A (35 kA)	2
BA0400	Busbar In=400A	2	BA0400	Busbar In=400A	2
KB1002	Connections T3 floor/wall	1	KB1002	Connections T3 floor/wall	1
ED....(*)	Connection L 1-L2-L3-N		ED....(*)	Connection L 1-L2-L3-N	
AD1064	No. 12 joining screws l=27 x flat busbars up to 10mm	1	AD1064	No. 12 joining screws l=27 x flat busbars up to 10mm	1
AD1098	No. 4 floor wiring duct supports	2	AD1098	No. 4 floor wiring duct supports	2

(*) For selection of the connection according to the circuit-breaker, see page 3/19 .

> Rapid selection table page 3/4 > In-depth technical information page 6/1 > Overall dimensions page 7/1

ArTu L Series dim. 1800x600x195 (1950x690x240) mm (external hxwxd) IP43 with plate for Tmax T3-XT3 and modular panels

Code	Description	Q.ty	Code	Description	Q.ty
Tmax T kit			**Tmax XT kit**		
SL1800	Back structure 1800x700x240mm (hxwxd)	1	SL1800	Back structure 1800x700x240mm (hxwxd)	1
MC1800	Blind riser h=1800mm	1	MC1800	Blind riser h=1800mm	1
ZL1000	Base strips for structure	1	ZL1000	Base strips for structure	1
ZL1001	Structure flanges	1	ZL1001	Structure flanges	1
PV1800	Glass door for structure h=1800mm	1	PV1800	Glass door for structure h=1800mm	1
LK3000	T3 floor/wall Kit horiz. 3/4P	1	LX3000	XT3 floor/wall Kit horiz. 3/4P	1
PC2600	Plain panel 200x600mm (hxw) M, K	1	PC2600	Plain panel 200x600mm (hxw) M, K	1
PC4600	Plain panel 400x600mm (hxw) M, K	1	PC4600	Plain panel 400x600mm (hxw) M, K	1
PM2624	Panel 24 mod. 200x600mm (hxw) M, K	2	PM2624	Panel 24 mod. 200x600mm (hxw) M, K	2
PM6672	Panel 72 mod. 600x600mm (hxw) M, K	1	PM6672	Panel 72 mod. 600x600mm (hxw) M, K	1
AL2000	No. 2 wall fixing brackets L	1	AL2000	No.2 wall fixing brackets L	1
GD1520	DIN rail, pitch 150/200mm	5	GD1520	DIN rail, pitch 150/200mm	5
AD1098	No. 4 supports for horiz./vert. floor-standing wiring duct	2	AD1098	No.4 supports for horiz./vert. floor-standing wiring duct	2

> Rapid selection table page 3/4 > In-depth technical information page 6/1 > Overall dimensions page 7/1

ArTu L modular structures
Examples of configurations

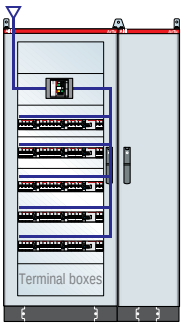

ArTu L Series dim. 1800x900x195 (1950x1080x240) mm (external hxwxd) IP43 complete with cable container l=300mm, plate for Tmax T3-XT3 and modular panels

Code	Description	Q.ty	Code	Description	Q.ty
Tmax T kit			**Tmax XT kit**		
SL1800	Back structure 1800x700x240mm (hxwxd)	1	SL1800	Back structure 1800x700x240mm (hxwxd)	1
MC1800	Blind riser h=1800mm	1	MC1800	Blind riser h=1800mm	1
ZL1000	Base strips for structure	1	ZL1000	Base strips for structure	1
ZL1001	Structure flanges	1	ZL1001	Structure flanges	1
PV1800	Glass door for structure h=1800mm	1	PV1800	Glass door for structure h=1800mm	1
LK3000	T3 floor/wall Kit horiz. 3/4P	1	LX3000	XT3 floor/wall Kit horiz. 3/4P	1
PC2600	Plain panel 200x600mm (hxw) M, K	1	PC2600	Plain panel 200x600mm (hxw) M, K	1
PC4600	Plain panel 400x600mm (hxw) M, K	1	PC4600	Plain panel 400x600mm (hxw) M, K	1
PM2624	Panel 24 mod. 200x600mm (hxw) M, K	2	PM2624	Panel 24 mod. 200x600mm (hxw) M, K	2
PM6672	Panel 72 mod. 600x600mm (hxw) M, K	1	PM6672	Panel 72 mod. 600x600mm (hxw) M, K	1
AL2000	No. 2 wall fixing brackets L	1	AL2000	No.2 wall fixing brackets L	1
ZL3000	Base strips for side-by-side assembly	1	ZL3000	Base strips for side-by-side assembly	1
ZL2001	Cable container flanges	1	ZL2001	Cable container flanges	1
VC1800	Cable container h=1800mm	1	VC1800	Cable container h=1800mm	1
PO1831	Blind door 1800x300mm (hxw) L, M int.	1	PO1831	Blind door 1800x300mm (hxw) L, M int.	1
PC1802	Blind door for cable container h=1800mm	1	PC1802	Blind door for cable container h=1800mm	1
MI1800	Riser CB side-by-side structures h=1800mm	1	MI1800	Riser CB side-by-side structures h=1800mm	1
AA1000	No. 2 fixing brackets wall side-by-side structures	1	AA1000	No.2 fixing brackets wall side-by-side structures	1
GD1520	DIN rail, pitch 150/200mm	5	GD1520	DIN rail, pitch 150/200mm	5
AD1098	No. 4 supports for horiz./vert. floor-standing wiring duct	3	AD1098	No.4 supports for horiz./vert. floor-standing wiring duct	3

> Rapid selection table page 3/4 > In-depth technical information page 6/1 > Overall dimensions page 7/1

ArTu L Series dim. 1800x800x195 (1950x890x240) mm (external hxwxd) IP43 complete with internal cable container w=200mm

Code	Description	Q.ty	Code	Description	Q.ty
Tmax T kit			**Tmax XT kit**		
SL1808	Back structure 1800x800x195mm (hxwxd)	1	SL1808	Back structure 1800x800x195mm (hxwxd)	1
MC1800	Blind riser h1800	1	MC1800	Blind riser h1800	1
ZL1000	Base strips for structure	1	ZL1000	Base strips for structure	1
ZL1101	Structure flanges w=800mm	1	ZL1101	Structure flanges w=800mm	1
PV1836	Glass door for structure 1800x800mm 36mod	1	PV1836	Glass door for structure 1800x800mm 36mod	1
LK3110	T3 floor/wall Kit horiz. 3/4P	1	LX3110	Kit floor XT3 Kit horiz. 3/4P	1
PC2800	Blind panel 200x800 (hxw)	1	PC2800	Blind panel 200x800 (hxw)	1
PC4800	Blind panel 400x800 (hxw)	1	PC4800	Blind panel 400x800 (hxw)	1
PM2836	Panel 36 mod. 200x800	2	PM2836	Panel 36 mod. 200x800	2
PM3872	Panel mod. h=300 l=800 pitch 150mm	2	PM3872	Panel mod. h=300 l=800 pitch 150mm	2
AL2000	No. 2 wall fixing brackets	1	AL2000	No.2 wall fixing brackets	1
GD1530	DIN rail, pitch 150/200mm w=36 mod.DIN	4	GD1530	DIN rail, pitch 150/200mm w=36 mod.DIN	4
EV1110	No. 50 angled supports 1 row of terminals	1	EV1110	No.50 angled supports 1 row of terminals	1
EV1119	No. 2 busbars 20x5 mm drilled and threaded M6 W=2000mm	1	EV1119	No.2 busbars 20x5 mm drilled and threaded M6 W=2000mm	1

> Rapid selection table page 3/4 > In-depth technical information page 6/1 > Overall dimensions page 7/1

ArTu L modular structures
Examples of configurations

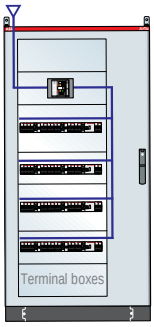

ArTu L Series dim.1600x800x195 (1750x890x240)mm (external hxwxd) IP43 complete with internal cable container w=200mm, plate for Tmax T3-XT3, and modular panels

Code	Description	Q.ty	Code	Description	Q.ty
Tmax T kit			**Tmax XT kit**		
SL1608	Back structure 1600x800x195mm (hxwxd)	1	SL1608	Back structure 1600x800x195mm (hxwxd)	1
ZL1000	Base strips for structure	1	ZL1000	Base strips for structure	1
ZL1101	Structure flanges w =800mm	1	ZL1101	Structure flanges w =800mm	1
MC1600	Blind riser h1600	1	MC1600	Blind riser h1600	1
PV1624	Glass door for structure 1600x800mm 24mod	1	PV1624	Glass door for structure 1600x800mm 24mod	1
VC1625	Int. cable container h=1600mm	1	VC1625	Int. cable container h=1600mm	1
LK3000	T3 floor/wall Kit horiz. 3/4P	1	LX3000	XT3 floor/wall Kit horiz. 3/4P	1
PM3624	Panel 24 mod. 300x600	2	PM3624	Panel 24 mod. 300x600	2
PM2624	Panel 24 mod. 200x600	2	PM2624	Panel 24 mod. 200x600	2
PC2600	Blind panel 200x600	2	PC2600	Blind panel 200x600	2
AL2000	No. 2 wall fixing brackets	1	AL2000	No.2 wall fixing brackets	1
GD1520	DIN rail, pitch 150/200mm	4	GD1520	DIN rail, pitch 150/200mm	4

> Rapid selection table page 3/4 > In-depth technical information page 6/1 > Overall dimensions page 7/1

ArTu L Series dim.1800x800x195 (1950x890x240)mm (external hxwxd) IP43 complete with internal cable container w =200mm, plate for Tmax T3-XT3 and modular panels

Code	Description	Q.ty	Code	Description	Q.ty
Tmax T kit			**Tmax XT kit**		
SL1808	Back structure 1900x800x195mm (hxwxd)	1	SL1808	Back structure 1900x800x195mm (hxwxd)	1
MC1800	Blind riser h1800	1	MC1800	Blind riser h1800	1
ZL1000	Base strips for structure	1	ZL1000	Base strips for structure	1
ZL1101	Structure flanges w=800mm	1	ZL1101	Structure flanges w=800mm	1
PV1824	Glass door for structure 1800x800mm 24mod	1	PV1824	Glass door for structure 1800x800mm 24mod	1
LK3000	T3 floor/wall Kit horiz. 3/4P	1	LX3000	XT3 floor/wall Kit horiz. 3/4P	1
PC2600	Blind panel 200x600	1	PC2600	Blind panel 200x600	1
PC4600	Blind panel 400x600	1	PC4600	Blind panel 400x600	1
PM2624	Panel 24 mod. 200x600	2	PM2624	Panel 24 mod. 200x600	2
PM6672	Panel 74 mod. 600x600	1	PM6672	Panel 74 mod. 600x600	1
AL2000	No. 2 wall fixing brackets	1	AL2000	No.2 wall fixing brackets	1
VC1825	Internal cable container h=1800mm	1	VC1825	Internal cable container h=1800mm	1
GD1520	DIN rail, pitch 150/200mm	5	GD1520	DIN rail, pitch 150/200mm	5

> Rapid selection table page 3/4 > In-depth technical information page 6/1 > Overall dimensions page 7/1

ArTu M monobloc structures

General 4/2
Selection of the structure 4/4
Kit for installing apparatus 4/6
Distribution systemse 4/13
Ordering codes 4/21
Examples of configurations 4/48

4

ArTu M monobloc structures
General

The ArTu M switchgear offers a simple and functional solution for constructing secondary and terminal distribution switchgear for uses where the degree of protection is important.

It can be wall or floor-mounted, only requiring assembly of the front door and side panels thanks to their characteristic monobloc structure.
Within the series, the wall-mounted switchgear is preset for installation of System Pro M modular apparatus and Tmax T1, T2 and T3 T serie up to T3 250 A, XT series up to XT3, (fixed version with front terminals) moulded-case circuit-breakers up to 250A and the Unifix wiring system.
The wall-mounted models include two depths (150 and 200mm), a functional width of 24 DIN modules (600 mm) and four different heights (600, 800, 1000 and 1200 mm), corresponding to 3, 4, 5 and 6 DIN rows with 200 mm centre distance.

It is also possible to use the 150 mm centre distance, thereby considerably increasing the internal capacity, which reaches 4, 5, 6 and 8 DIN rows respectively.

The floor-mounted switchgear, on the other hand, has a depth of 250 mm and is available in two functional widths (600 mm 24 DIN modules and 800 mm 36 DIN modules or 24 DIN modules plus cable riser) in four heights (1400, 1600, 1800 and 2000 mm), corresponding to 7, 8, 9 and 10 DIN rows respectively, with 200 mm centre distance. Again in this case it is possible to use the 150 mm centre distance to increase the internal capacity, taking this to 9, 10, 12 and 13 DIN rows respectively.

The sides of the M series floor-mounted switchgear consist of two removable side panels, which allow lateral coupling of the structures or cable containers with useful width of 300mm.

The modular System Pro M, and the Tmax up to T6 T serie up to T6 800 A, XT series up to XT4,(fixed version with front terminals) moulded-case circuit-breakers in the fixed version with front terminals are found within the floor-mounted version. The busbar systems with shaped section up to 800A, flat up to 630A and the Unifix cabling system can be used.

The front door, available either made of transparent tempered glass applied from the inside, or of plain steel sheet, can be replaced according to the different application requirements by finishing frames with IP 31 degree of protection. It is also possible to carry out fixing to the wall using dedicated brackets for the floor-mounted versions.

The 100 mm high base strip, complete with removable flanges, is already mounted on the structure, and allows easy handling with transpallets. Removable flanges for conductor inlet are also provided in the top and bottom area.
The maximum rated current is 630 A and the degree of protection varies from IP31 (without front door) to IP65 (with front door).

Upper removable flanges allow easy access

Cabling control is made easier thanks to lateral removable panels

Technical characteristics

	Wall-mounted D=115/165	Floor-mounted D=195
Compliance with Standards	CEI EN 60439-1/IEC 61439-1-2	CEI EN 60439-1/IEC 61439-1-2
Rated service voltage Ue	up to 690 V	up to 690 V
Rated insulation voltage Ui	up to 1000 V	up to 1000 V
Rated frequency	50-60 Hz	50-60 Hz
Rated impulse withstand voltage Uimp	25 kV	35 kV
Rated current In	up to 250 A	up to 630 A
Rated short-time short-circuit withstand current Icw	up to 25 kA	up to 35 kA
Rated peak short-circuit current Ipk	up to 52.5 kA	up to 74 kA
Degree of protection IP	65 with door	31 without door
		65 with door

ArTu M monobloc structures
Selection of the structure

Rapid selection tables

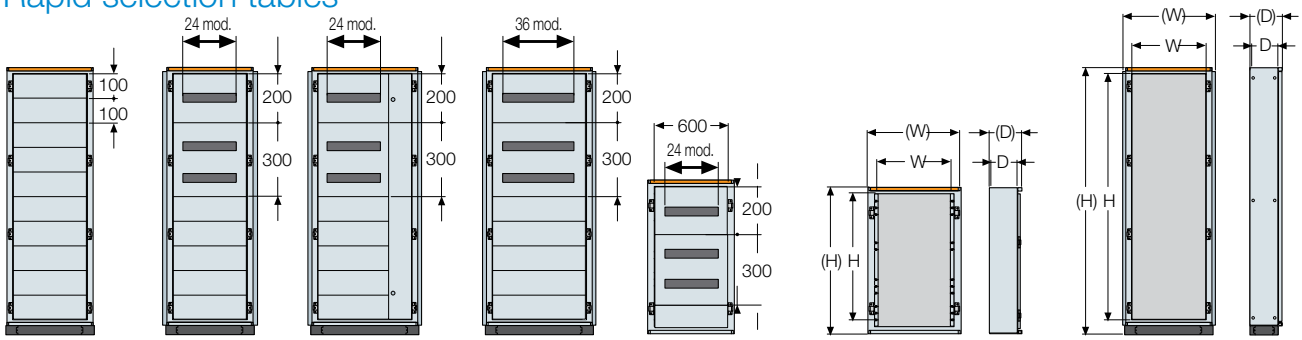

4

Structure

No. vert. mod. H=100mm	No. of DIN mod. which can be installed		Overall external dimensions (1)			Functional dimensions (2)			Wall structures	Floor structures
	DIN panel 150mm centre dist.	DIN panel 200mm centre dist.	(H) mm	(W) mm	(D) (3) mm	H mm	W mm	D (3) mm	Basic version	Basic version
6	96 (24x4)	72 (24x3)	700	700	150	600	600	115	SM6061	-
8	120 (24x5)	96 (24x4)	900	700	150	800	600	115	SM8061	-
				700	200		600	165	SM8062	-
10	144 (24x6)	120 (24x5)	1100	700	200	1000	600	165	SM1062	-
12	192 (24x8)	144 (24x6)	1300	700	200	1200	600	165	SM1262	-
14	216 (24x9)	168 (24x7)	1596	724	250	1400	600	195	-	SM1462
16	240 (24x10)	192 (24x8)	1796	724	250	1600	600	195	-	SM1662
	360 (36x10)	288 (36x8)		924	250		800	195	-	SM1682
18	288 (24x12)	216 (24x9)	1996	724	250	1800	600	195	-	SM1862
	432 (36x12)	324 (36x9)		924	250		800	195	-	SM1882
20	313 (24x13)	240 (24x10)	2196	724	250	2000	600	195	-	SM2062
	468 (36x13)	360 (36x10)		924	250		800	195	-	SM2082

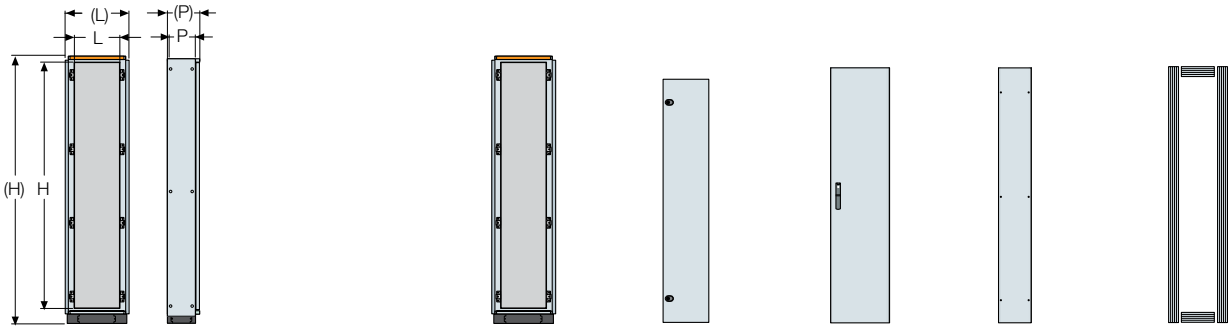

Additional cable container W = 300mm

Overall external dimensions (1)			Functional dimensions (2)			Structure	Internal door front IP31	External door front IP65	Side panel	Finishing section IP31
(H) mm	(W) mm	(D) mm	H mm	W mm	D (3) mm					
1796	424	250	1600	300	195	VC1632	PO1631	PO1630	LF1625	See page 9/35
1996	424	250	1800	300	195	VC1832	PO1831	PO1830	LF1825	
2196	424	250	2000	300	195	VC2032	PO2031	PO2030	LF2025	

The cable container, placed at the side of the structure with the special kit (AD1012), keeps the IP65 degree of protection when installed with an external door.

The external doors are used on the additional cable container to be placed side by side with an ArTu structure with door (IP65). The internal doors are used on the additional cable container placed side by side with an ArTu structure in the IP31 version (i.e. without door and with finishing profiles). This ensures uniformity of appearance between the structure and additional cable container.

Furthermore, the internal doors can be used as internal segregations of the cable container: should a segregation with door of the additional cable container open be requested, it is possible to mount both the internal and external door at the same time.

> Selection by components page 4/21 > In-depth technical information page 6/1 > Overall dimensions page 7/1

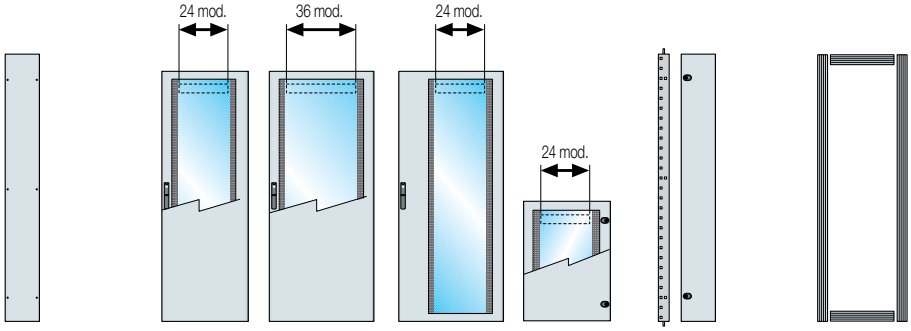

	Side covering IP65	Front doors IP65			Internal cable container	Finishing section IP31
	Side panel	Glass door 24/36 mod.	Glass door 24 mod.+ int cable container	Blind door 24/36 mod.		
	-	PV6060	-	PO6060	-	
	-	PV8060	-	PO8060	-	
	-	PV8060	-	PO8060	-	
	-	PV1060	-	PO1060	-	
	-	PV1260	-	PO1260	-	
	LF1425	PV1460	-	PO1460	-	See page 4/26
	LF1625	PV1660	-	PO1660	-	
	LF1625	PV1688	PV1680	PO1680	VC1622	
	LF1825	PV1860	-	PO1860	-	
	LF1825	PV1888	PV1880	PO1880	VC1822	
	LF2025	PV2060	-	PO2060	-	
	LF2025	PV2088	PV2080	PO2080	VC2022	

(1) The overall dimensions of the ArTu M switchgear starting from the 1400mm (1596mm) height include the base strip h=100mm and the side panels.

(2) The functional dimensions represent the useful space for installing the apparatus.

(3) In this catalogue, reference is always made to the 150/200/250mm depths corresponding to the external overall dimensions with front door.

The useful dimensions between panel and bottom of the structure are 115/165/195mm.

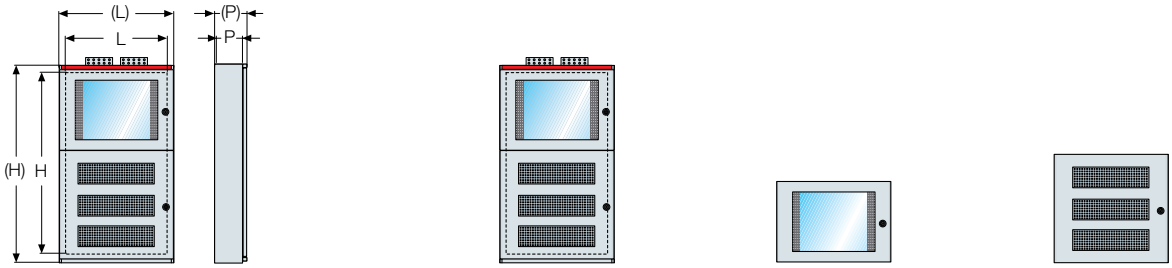

Structure for constructing IP40 switchgear for operating theatres

Overall external dimensions (1)			Functional dimensions (2)			Complete structure (1)	Spare parts	
(H) mm	(W) mm	(D) mm	H mm	W mm	D (3) mm		Glass door	Blind door
100	700	200	1000	600	165	SM1069	PV4060	PO6069

The QSO switchgear for operating theatres is complete with brackets (AD1009 No. 4 pieces) for installation of the wiring duct, two DIN rail kits (GD6002 and PM2624 No. 2 pieces) and relative brackets for wall fixing (4 pieces), 2 air passage filters and closing box with Yale insert.

> Selection by components page 4/21 > In-depth technical information page 6/1 > Overall dimensions page 7/1

ArTu M monobloc structures
Kit for installing apparatus

Solutions recommended for installation of the apparatus

Apparatus		Type of structure/Installation					
		Wall-mounted structures			Floor-mounted structures		
		Vertical on DIN rail	Vertical	Horizontal	Vertical on DIN rail	Vertical	Horizontal
System Pro *M* modular apparatus		■			■		
OT					■	■	■
OESA						■	
OETL						■	
Tmax T1	3/4 poles - fixed / front terminals	■			■		■
Tmax T1	4 poles - fixed / front terminals +RC mod.	■ (1)			■		
Tmax T2	3/4 poles - fixed / front terminals	■			■		■
Tmax T2	4 poles - fixed / front terminals +RC mod.	■ (1)			■		
Tmax T3	3/4 poles - fixed / front terminals	■		■	■		■
Tmax T3	4 poles - fixed / front terminals +RC mod.	■ (1)			■	■	■
Tmax T4	3/4 poles - fixed / front terminals					■	■
Tmax T4	4 poles - fixed / front terminals +RC mod.					■	■
Tmax T5	3/4 poles - fixed / front terminals					■	■
Tmax T5	4 poles - fixed / front terminals +RC mod.					■	■
Tmax T6	3/4 poles - fixed / front terminals					■	■
Busbar with shaped section	Linear busbar holder					(■)	
	Scaled busbar holder					(▲)	
Flat busbar	Linear busbar holder					■	
Unifix L				(■)			(■)
Unifix H							(■)
Tmax XT1	3/4 poles - fxed / front terminals	■			■	■	■
Tmax XT1	4 poles - fxed / front terminals +RC mod.	■ (1)			■	■	■
Tmax XT2	3/4 poles - fxed / front terminals						■
Tmax XT2	4 poles - fxed / front terminals +RC mod.						■
Tmax XT3	3/4 poles - fxed / front terminals	■			■	■	■
Tmax XT3	4 poles - fxed / front terminals +RC mod.	■ (1)			■	■	■
Tmax XT4	3/4 poles - fxed / front terminals					■	■
Tmax XT4	4 poles - fxed / front terminals +RC mod.					■	■
Side-by-side Tmax XT kits						■	

(1) Only for structures D=200mm. - (■) Can only be installed in the structure. - (▲) Can only be installed in the cable container.

Assembly solution

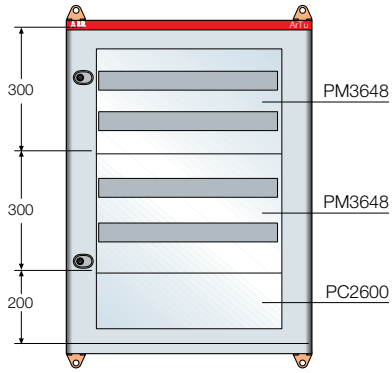

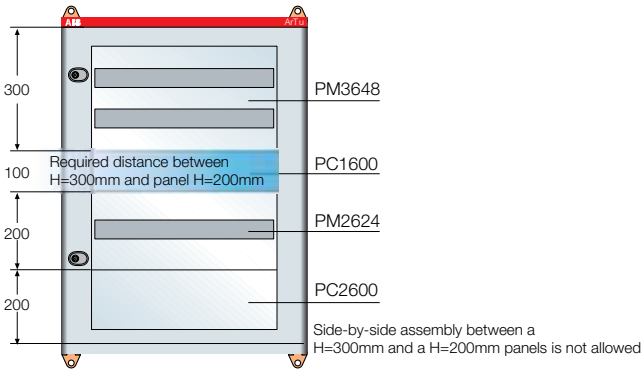

> Selection by components page 4/21 > In-depth technical information page 6/1 > Overall dimensions page 7/1

System Pro M modular apparatus, Tmax T1-T2-T3, XT1 and XT3, OT≤ 160 and supports for Unifix H

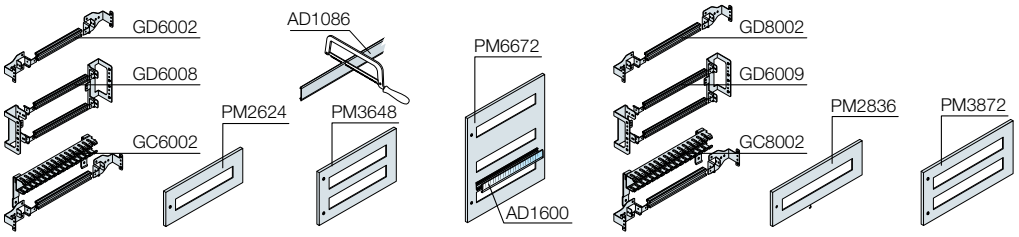

	W=600mm				W=800mm		
H (mm)	DIN rail kit 24 DIN mod.	Panel 1 DIN row 24 DIN mod.	Panel 2 DIN rows 48 DIN mod.	Panel 3 DIN rows 72 DIN mod.	DIN rail kit 36 DIN mod.	Panel 1 DIN row 36 DIN mod.	Panel 2 DIN rows 72 DIN mod.
Standard aluminium version							
200	GD6002	PM2624			GD8002	PM2836	
300	GD6002	PM2312			GD8002	PM2315	
300	GD6008		PM3648		GD6009		PM3872
600	3x GD6002			PM6672			
Version fitted with accessories (complete with 60x80 wiring duct and AD1037 supports)							
200	GC6002	PM2624				GC8002	PM2836
Reinforced version for Tmax and Tmax differential RC 222/1 mod. 200mm							
200	GD6010(1)	PM2624				GD8010	PM2836
Reinforced version Tmax + differential module (2)							
300	GD6010(1)	PM2312				GD8010	PM2315
Unifix H fixing brackets							
300	AD1061	PM3624				AD1061	PM3836

(1) Cannot be installed on wall-mounted version. (2) Version for Tmax with differential module underplaced RC 221/222.

Completion items for installation on DIN rail

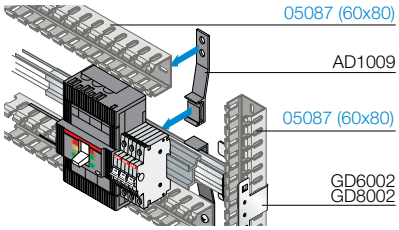

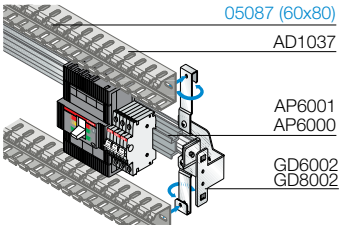

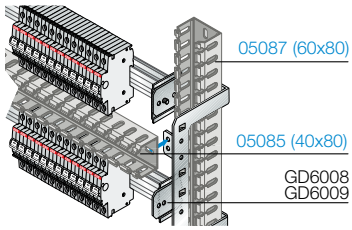

Supports for horizontal wiring duct

Allows assembly of the cabling wiring duct horizontally up to 60x80mm. The AD1009 plastic model can be positioned on the rear of the DIN rail, whereas the AD1037 metal version is fixed onto the brackets of DIN rail GD6002/ GD8002, and allows adjustment of the wiring duct depth.

Code	Description
AD1009	Horizontal wiring duct (plastic) supports
AD1037	Horizontal wiring duct (metal) supports

Depth adapter

Code	Description
AP6001	No.1 depth adapter for Tmax T1-T2-T3-XT1-XT3 W=600mm wall-mounting
AP6000	No.1 depth adapter for Tmax T1-T2-T3-XT1-XT3 W=600mm floor-standing

Polished flange for Tmax XT2-XT4 positioned side by side on plate

Code	Description
AD3310	AD3310 Polished flange for plate-mounted XT2 3P
AD3311	AD3311 Polished flange for plate-mounted XT2 4P
AD3312	AD3312 Polished flange for plate-mounted XT4 3P
AD3313	AD3313 Polished flange for plate-mounted XT4 4P

Tmax XT2-XT4 on DIN rail cannot be mounted in ArTu switchboards.

DIN window hole covers

Code	Description
AD1086	DIN L=2000mm hole cover strip - grey RAL 7035
AD1088	DIN 24 modules hole cover strip - grey RAL 7035
AD1089	DIN 36 modules hole cover strip - grey RAL 7035

> Selection by components page 4/21 > In-depth technical information page 6/1 > Overall dimensions page 7/1

ArTu M monobloc structures
Kit for installing apparatus

Horizontal installation

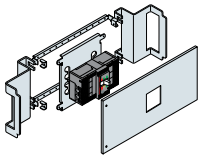

4

Circuit-breaker front terminals	No. poles	Dimensions H (mm)	Fixed		Fixed + RCD underneath	
			24 DIN mod. W=600mm	36 DIN mod. W=800mm	24 DIN mod. W=600mm	36 DIN mod. W=800mm
Tmax T1	3-4	200	KT1117			
Tmax T1	4	200			KT1102	
Tmax T2	3-4	200	KT2117			
Tmax T2	4	200			KT2102	KL2103
Tmax T3	3-4	200	KT3112	KL3113		
Tmax T3	4	300			KT3102	KL3103
Tmax T3	3-4	200	KT3118 (1)			
Tmax T4	3-4	200	KT4112	KL4115		
Tmax T4	4	200			KT4110	KL4116
Tmax T5	3-4	300	KT5112	KL5114		
Tmax T5	4	300			KT5110	KL5116
Tmax T6	3-4	500	KT6113	KL6113		
Tmax XT1	3(2)/4	200	KX1617			
Tmax XT1 CB + RC mod.	4	200			KX1602	
Tmax XT2	3(2)/4	200	KX2619			
Tmax XT2 CB + RC mod.	4	200			KX2602	
Tmax XT3	3(2)/4	200	KX3612	KL3613		
Tmax XT3	3(2)/4	200	KX3618 (1)			
Tmax XT3 CB + RC mod.	4	300			KX3602	KX3603
Tmax XT4	3(2)/4	200	KX4612	KX4615		
Tmax XT4 CB + RC mod.	4	200			KX4610	

Hole cover W=2000mm Article AD1086, 24 DIN modules AD1088, 36 DIN modules AD1088 , colour grey RAL 7035.

(1) Kit for wall-mounted ArTu M D=200mm.

(2) For 3 poles breakers please order accessory flange codes: AD3305 XT1 3P Flange for plate-mounting - AD3306 XT2 3P Flange for plate-mounting - AD3307 XT3 3P Flange for plate-mounting - AD3308 XT4 3P Flange for plate-mounting

> Selection by components page 4/21 > In-depth technical information page 6/1 > Overall dimensions page 7/1

Vertical installation

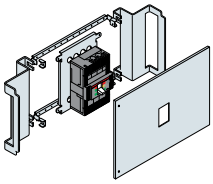

Circuit-breaker front terminals	No. poles	Dimensions H (mm)	Fixed 24 DIN mod. W=600mm	Fixed 36 DIN mod. W=800mm	Fixed + RCD underneath 24 DIN mod. W=600mm	Fixed + RCD underneath 36 DIN mod. W=800mm
TTmax T1-T2-T3-XT1-XT3 on DIN 35 rail	(see page 4/7)					
Tmax T3	3-4	300	KT3212			
Tmax T4	3-4	400	KT4212			
Tmax T4	4	500			KT4102	
Tmax T5	3-4	400	KT5212	KL5212		
Tmax T5	3-4	500			KT5102	KL5102
Tmax T6	3-4	500	KT6213	KL6213		
Tmax XT1	3[1]/4	200	KX1618			
Tmax XT1 CB + RC mod.	4	300			KX1603	
Tmax XT1 N 3 CBs side by side	3[1]/4	200	KX1604			
Tmax XT2 No.3/4[2] CBs side by side	3-4[3]	200	KX2604			
Tmax XT3	3[1]/4	300	KX3614			
Tmax XT3 CB + RC mod.	4	300			KX3609	
Tmax XT4	3[1]/4	300	KX4614			
Tmax XT4 No.3/4[3] CBs side by side	3/4[3]	300	KX4604			
Tmax XT4CB + RC mod.	4	400			KX4602	

Hole cover W=2000mm Article AD1086, 24 DIN modules AD1088, 36 DIN modules AD1088 , colour grey RAL 7035.

[1] For 3 poles breakers please order accessory flange codes: AD3305 XT1 3P Flange for plate-mounting - AD3306 XT2 3P Flange for plate-mounting - AD3307 XT3 3P Flange for plate-mounting - AD3308 XT4 3P Flange for plate-mounting.

[2] No. 4 CBs side by side 3P, No. 3 CBs side by side 4P.

[3] Order AD3310, AD3311, AD3312 and AD3313 polished flange.

> Selection by components page 4/21 > In-depth technical information page 6/1 > Overall dimensions page 7/1

ArTu M monobloc structures
Kit for installing apparatus

Plain back plates, plain and ventilated panels

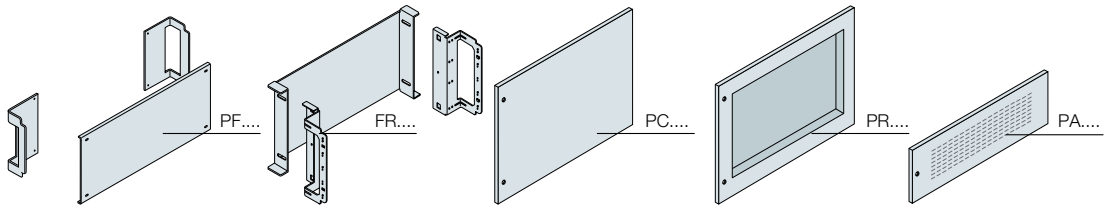

4

	Back plates				Panels				
	Plain flat		Plain recessed		Plain flat		Plain recessed		Ventilated
H (mm)	24 DIN mod. W=600mm	36 DIN mod. W=800mm	24 DIN mod. W=600mm	36 DIN mod. W=800mm	24 DIN mod. W=600mm	36 DIN mod. W=800mm	24 DIN mod. W=600mm	36 DIN mod. W=800mm	24 DIN mod. W=600mm
100					PC1600	PC1800			PA1600
200	PF2610[1]	PF2810	FR2601	FR2801	PC2600	PC2800	PR2600	PR2800	PA2600
300					PC3600	PC3800			
400	PF4610[1]	PF4810	FR4601	FR4801	PC4600	PC4800	PR4600	PR4800	
600					PC6600	PC6800	PR6600	PR6800	
800					PC8600	PC8800			
1600					PC1660	PC1680			
1800					PC1860	PC1880			
2000					PC2060	PC2080			

[1] Can also be installed on wall-mounted Artu M version D=200mm. Can be used to mount all the non-modular apparatus. For useful dimensions, please see page 7/20.

Useful internal space

Useful internal space

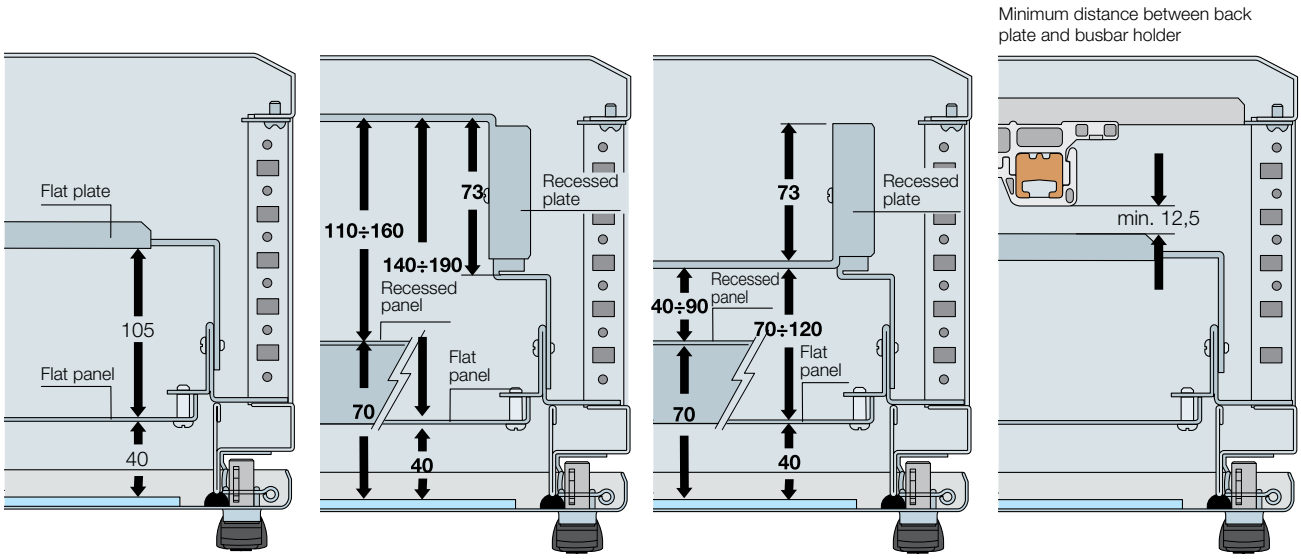

> Selection by components page 4/21 > In-depth technical information page 6/1 > Overall dimensions page 7/1

Kit for OT200÷400

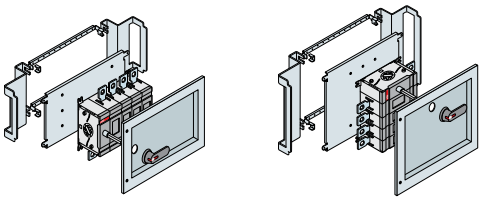

Description	Code	Dimensions (mm) H	W	Poles	Control	Maximum length handle	Minimum length shaft
Kit OT200/250/315/400 vertical	KO2260	300	600	E03-04	Lateral	80mm (Ø6)-125mm (Ø12)	130mm (Ø6)-166mm (Ø12)
Kit OT200/250/315/400 horizontal	KO2261	300	600	E03-04	Lateral	80mm (Ø6)-125mm (Ø12)	130mm (Ø6)-166mm (Ø12)
Kit OT200/250/315/400 vertical	KO2280	400	600	E03-04	Lateral	80mm (Ø6)-125mm (Ø12)	130mm (Ø6)-166mm (Ø12)
Kit OT200/250/315/400 horizontal	KO2281	600	600	E03-04	Lateral	80mm (Ø6)-125mm (Ø12)	130mm (Ø6)-166mm (Ø12)

Panels for square measuring instruments

These allow installation of measuring instruments and relative changeover switches.

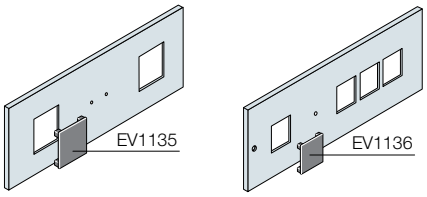

	2-instrument panel				4-instrument panel			
	72x72mm		96x96mm		72x72mm		96x96mm	
H (mm)	24 DIN mod. W=600mm	36 DIN mod. W=800mm	24 DIN mod. W=600mm	36 DIN mod. W=800mm	24 DIN mod. W=600mm	36 DIN mod. W=800mm	24 DIN mod. W=600mm	36 DIN mod. W=800mm
200	PS2720	PS2728	PS2960	PS2968	PS4720	PS4728	PS4960	PS4968

Square instrument hole covers

Code	Description
EV1135	Hole cover of 72x72mm instrument black RAL 9005
EV1136	Hole cover of 96x96mm instrument black RAL 9005

> Selection by components page 4/21 > In-depth technical information page 6/1 > Overall dimensions page 7/1

ArTu M monobloc structures
Kit for installing apparatus

Installation of terminal boxes on DIN rail

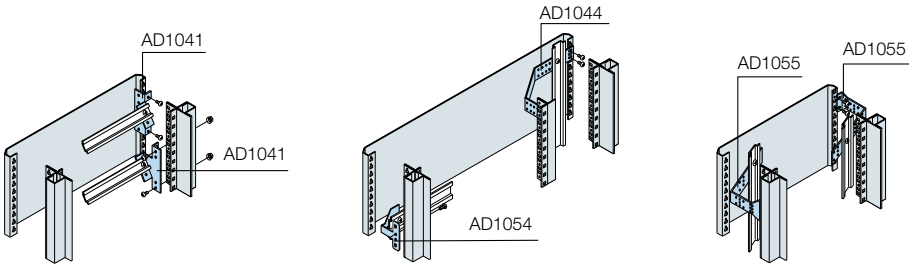

4

	Terminal box mounting position		
Installation on DIN rail	**Structure**	**Internal cable container**	**External cable container**
Horizontal	AD1054		
Horizontal angled 45°	AD1041		
Vertical		AD1044	AD1055

The ArTu switchgear is preset for assembly of terminal boxes with the sole exception of the models in the M wall-mounted series with 150mm depth.

Installation of terminal boxes on DIN rail and earthing busbar

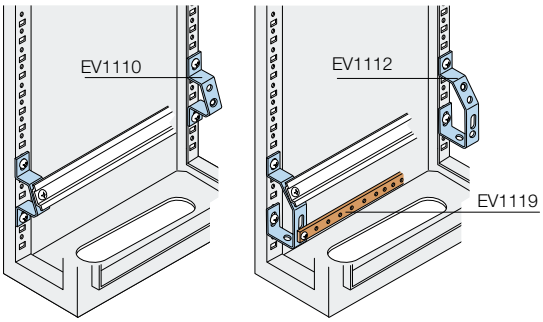

Code	Angled supports for terminal boxes and earthing busbar
EV1110-EV2110	Angled supports 1 row of terminals
EV1112-EV2112	Angled supports 1 row of terminals + earth

> Selection by components page 4/21 > In-depth technical information page 6/1 > Overall dimensions page 7/1

Distribution systems

Modular dividers

		Single-pole						Three-poles	
		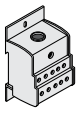		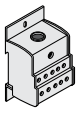			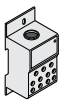	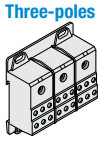	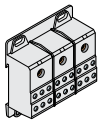
Code		**AD1076**	**AD1080**[1]	**AD1007**	**D1081(2)**	**AD1030**	**AD1031**	**AD1075**	**AD1006**
In	(A)	125	125	175	175	250	400	125	175
Icw	(kA)	4.4	4.2	11	1.1	21	21	4.4	11
Version	pole	1	1	1	1	1	1	3	3
Installation		DIN35/plate	DIN35/plate	DIN35/plate	DIN35/plate	DIN35/plate	DIN35/plate	DIN35/plate	DIN35/plate
Power supply Ø cable (mm²)	min.	10	6	16	10	35	95	10	16
	max	35	35	70	70	120	185	35	70
No. outgoing feeder Ø cable (mm²)	1,5÷10					4	4		
	2,5÷16	10	6	10	6	5	5	6	6
	2,5÷25					2	2		
Dimensions HxWxD	(mm)	71x45x42,5	74x27x47	71x45x42,5	92x35x49	95.5x45x49	95.5x45x49	71.5x80x42,5	71.5x80x42,5
No. DIN modules		2,5	1,5	2,5	2	3	3	4.5	4.5
Rated service voltage Ue	(V)	1000 Vac 1500 Vdc	1000 Vac 1500 Vdc	1000 Vac 1500 Vdc	1000 Vac 1500 Vdc	1000 Vac 1500 Vdc	1000 Vac 1500 Vdc	1000 Vac 1500 Vdc	1000 Vac 1500 Vdc
Degree of protection	IP	20	20	20	20	20	20	20	20

		Four-pole					
			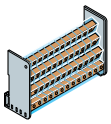	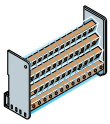	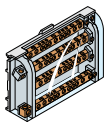	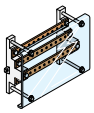	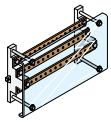
Code		**AD1004**	**AD1028**	**AD1029**	**AD1027**	**AD1034**	**AD1053**
In	(A)	125	125	125	160	250	250
Icw	(kA)	10	4.2	4.2	6.2	15	15
Ipk	(kA)	24	25	25	20	30	30
Version	poli	4.2	4	4	4	30	30
Installation		DIN35/plate	DIN35/plate	DIN35/plate	DIN35	4	4
Power supply Ø cable (mm²)	min.	6	6	6	10	with AD1038 brackets	with AD1038 brackets
	max	35	25 with cable terminal	25 with cable terminal	50		
No. outgoing feeder Ø cable (mm²)		1/6 5/phase				No. 22 holes M5 with 17,5mm pitch per phase (threaded busb. 20x5mm)	No. 32 holes M5 with 17,5mm pitch per phase (threaded busb. 20x5mm)
		1.5/6 4/neutral					
		1.5/10 2/phase	7	9			
		6/neutral					
		1.5/16		2			
		2.5/16			8		
		6/25	2	2	3		
Dimensions HxWxD	(mm)	74.5x98x45	93x89x48	96x126x48	90x160.5x50	150x600x70	150x800x70
No. DIN modules		5,5	5	7	9	24	36
Rated service voltage Ue	(V)	1000 Vac 1500 Vdc	440	440	440	500	500
Degree of protection	IP	20	20	20	20		

[1] Possibility of putting in parallel with AD1083 connections.

[2] Possibility of putting in parallel with comb type connection (not supplied).

> Selection by components page 4/21 > In-depth technical information page 6/1 > Overall dimensions page 7/1

ArTu M monobloc structures
Distribution systems

Flexible busbars up to 1000 A

Cross-section	In (A)	Code	No. busbar/ phase	Capacity (A) IP31	IP41	IP65	Dimensions WxW (mm)	Section dimensions (mm²)	Lenght (mm)	Weight (kg)
	250	BF1602	1	395	323	250	20x3	60	2000	1,42
	400	BF2502	1	498	460	400	20x5	100	2000	2,15
	500	BF4002	1	660	620	500	24x6	144	2000	3
	630	BF4012[1]	1	758	702	630	32x5	160	2000	3,36
	1000	BF6302	1	1203	1140	1000	40x8	320	2000	6,33

[1] Only for front extended terminals and rear terminals.

Busbars with shaped section for applications up to 800 A

Cross-section	In (A)	Code	No. busbar/ phase	Capacity (A) IP31	IP41	IP65	Dimensions WxW (mm)	Section dimensions (mm²)	Lenght (mm)	Weight (kg)
	520	BA0400	1	630	520	35	20x20	200	1730	4
	830	BA0800	1	970	830	35	20x20	200	1730	4,4

> Selection by components page 4/21 > In-depth technical information page 6/1 > Overall dimensions page 7/1

Selection of busbar holders and crosspieces

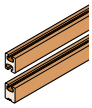

Vertical installation

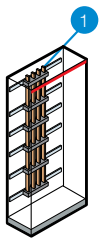

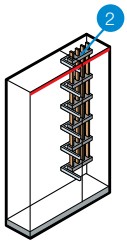

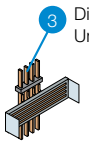

Busbar holder Type	Busbars with shaped section In ≤ 400÷800A	Installation	Crosspieces for fixing to structure: Structure 24/36 DIN modules	Internal cable container	Additional cable container
Scaled up to 800A PB0802 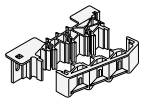	BA0400 BA0800	1			TR3001 (W=300mm)
		2		TV2000 (W=200mm)	
Linear up to 800A PB0803 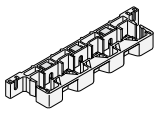	BA0400 BA0800	1	TV6200 (W=600mm) TV8200 (W=800mm)		
		3	TV6200 (W=600mm) TV8200 (W=800mm)		

Selection and assembly of busbars with shaped section and busbar holders

Using the correct number of busbar holders ensures resistance to electrodynamic forces in the case of a short-circuit. Assess the maximum distance (max X) which must not be exceeded between two consecutive busbar holders according to the max. Icc.

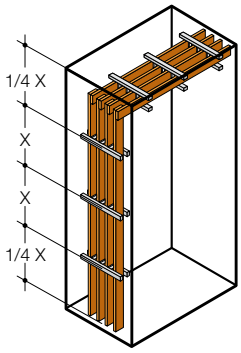

The distance between the first busbar holder and the end of the busbar must not exceed $^1/_4$ of "X".

Busbar	Capacity	Busbar holder	No. of busbar holders according to the max. I_{cc}: No. busbars per phase	25 kA	X max (mm)	35 kA	X max (mm)	50 kA	X max (mm)	65 kA	X max (mm)	75 kA	X max (mm)	85 kA	X max (mm)	100 kA	X max (mm)
		Linear															
BA0400	400A	PB0803	1	4	550	5	425	-	-	-	-	-	-	-	-	-	-
BA0800	800A	PB0803	1	4	550	4	550	-	-	-	-	-	-	-	-	-	-
		Scaled															
BA0400	400A	PB0802	1	4	550	4	550	-	-	-	-	-	-	-	-	-	-
BA0800	800A	PB0802	1	4	550	4	550	-	-	-	-	-	-	-	-	-	-

max X = maximum distance not to be exceeded between two consecutive busbar holders.

> Selection by components page 4/21 > In-depth technical information page 6/1 > Overall dimensions page 7/1

ArTu M monobloc structures
Distribution systems

Flat busbars for distribution up to 630 A

Cross-section	In (A)	Code	No. busbar/ phase	capacity (A) IP31	capacity (A) IP43	Icw max (kA)	Dimensions WxW (mm)	Dimensions Lenght (mm)	Weight (kg)
	275	BR0250	1	290	275	23	15x5	1750	1,35
	440	BR0400	1	475	440	23	25x5	1750	1,8
	695	BR0630	1	750	695	32	30x10	1750	4,4

4

Busbar holders and crosspieces

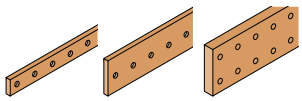

Vertical installation

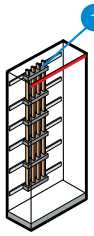

Busbar holder Type	Flat busbars In = 250A	Flat busbars In = 400A	Flat busbars In = 630A	Installation	Crosspieces for fixing to structure Structure	Crosspieces for fixing to structure Additional cable container
Linear up to 630A BP0630 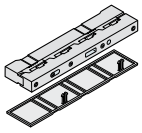				1	TV6200 (W=600mm) TV8200 (W=600mm)	TR3001 (W=300mm)

(1) The busbar terminal protection covers must be ordered separately BP0632.

> Selection by components page 4/21 > In-depth technical information page 6/1 > Overall dimensions page 7/1

Selection and assembly of flat busbars and busbar holders

Using the correct number of busbar holders ensures resistance to electrodynamic forces in the case of a short-circuit. Assess the maximum distance (max X) which must not be exceeded between two consecutive busbar holders according to the max. Icc.

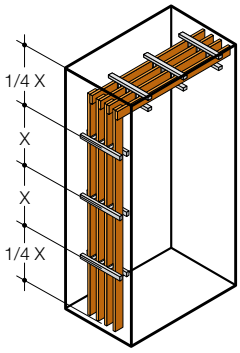

The distance between the first busbar holder and the end of the busbar must not exceed $^1/_4$ of "X".

Busbar	Capacity	Busbar holder	No. of busbar holders according to the max. I_{cc}								
			No. busbars per phase	25 kA	X max (mm)	35 kA	X max (mm)	50 kA	X max (mm)	65 kA	X max (mm)
BR0250	250A		1	11	175	15	125	18	100	-	-
BR0400	400A	BP0630	1	9	225	15	125	18	100	-	-
BR0630	630A		1	9	225	15	125	18	100	-	-

max X = maximum distance not to be exceeded between two consecutive busbar holders.

Flat drilled and threaded busbars for earthing connection

Cross-section	Code	Threading	Pitch	WxW (mm)	Length (mm)	AxB (mm)
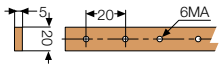	EV1119	6 MA	20	20x5	2000	
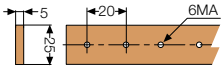	EV1120	6 MA	20	25x5	2000	
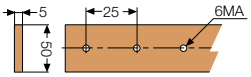	EV1121	6MA	25	50x5	2000	
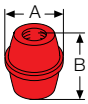	EV1122	6MA				34x30
	EV1123	8MA				34x30
	EV1124	6MA				40x50
	EV1125	8MA				40x50

> Selection by components page 4/21 > In-depth technical information page 6/1 > Overall dimensions page 7/1

ArTu M monobloc structures
Distribution systems

Unifix systems

Technical characteristics		Unifix H	Unifix L
Rated service voltage (U_e)		690V AC	400V AC
Rated insulation voltage (U_i)		1000V AC	500V AC
Rated impulse withstand voltage (U_{imp})		8kV	6kV
Rated frequency		50/60Hz	50/60Hz
Rated current (I_n)	central power supply	400A	100A
	lateral power supply	320A	80A
Rated short-time withstand current (I_{cw})		25kA	
Maximum peak current (I_{pk})		52,5kA-400V	
Maximum installable circuit-breaker size		250A	100A
Conditioned short-circuit current (Icc)	Tmax T1	36kA-400V	
	Tmax T2 N, S [1]	50kA-400V	
	Tmax T3	50kA-400V	
	Tmax XT1	50kA-400V	
	Tmax XT3	50kA-400V	
With circuit-breaker	S200		6kA-400V
	S200M		10kA-400V
	S200P		25kA-400V
Degree of protection		IP20 with accessory	IP20
Characteristics of the insulating material		Self-extinguishing thermoplastic V1 (UL94)	Self-extinguishing thermoplastic V1 (UL94)
Characteristics of the conductor material		Electrolytic copper	Electrolytic copper
Width (No. modules/mm)		24/600 36/800	12/400 24/600 36/800

Installation of Unifix system			
Frame for Tmax T and Tmax XT series	300x600mm (HxW)	ED2183	
	300x800mm (HxW)	ED2191	
Fixing brackets H=300mm		AD1097	
Crosspiece for direct connection to the rear busbars with shaped section with PB0803	W=600mm	TL1000	
	W=800mm	TL1100	
Busbar 2P	12 mod.		ED2993
	18 mod.		ED3009
	24 mod.		ED3017
	36 mod.		ED3025
Busbar 4P	12 mod.		ED2944
	18 mod.		ED2951
	24 mod.		ED2969
	36 mod.		ED2977
Fixing support	24 mod.		GD1520
	36 mod.		GD1530

[1] Select circuit-breakers in version with front terminals for copper cables.

> Selection by components page 4/21 > In-depth technical information page 6/1 > Overall dimensions page 7/1

Unifix systems

Table for selecting connections according to the circuit-breaker

Circuit-breaker series		Unifix H		Unifix L
SN201		(top power supply)		
DS941		**ED2654** L1/N 40A		**ED3272** L1/N 40A
		ED2662 L2/N 40A		**ED3280** L2/N 40A
		ED2670 L3/N 40A		**ED3298** L3/N 40A
S200 - DS200		(top power supply)	(bottom power supply)	
F200 up to 63A (Unifix L)		**ED2531** L1 63A	**ED2572** L1 63A	**ED3033** L1 100A
		ED2549 L2 63A	**ED2590** L2 63A	**ED3041** L2 100A
		ED2556 L3 63A	**ED2598** L3 63A	**ED3058** L3 100A
		ED2564 N 63A	**ED2606** N 63A	**ED3066** N 100A
		ED2845 False pole module		
S800		(top power supply)		
		ED2557 L1 ≤32A		
		ED2558 L2 ≤32A		
		ED2559 L3 ≤32A		
		ED2560 N ≤32A		
		ED2551 L1 125A		
		ED2552 L2 125A		
		ED2553 L3 125A		
		ED2554 N 125A		
		ED2550 False pole module		
S280 (80-100A)		(top power supply)		
E200 up to 100A - RS370 - F200 80/100A (Unifix H)		**ED2720** L1 100A		**ED3132** pow. supply L1/L2/L3/N - 350mm
		ED2738 L2 100A		**ED0026** pow. supply L1/L2/L3/N - 1500mm
		ED2746 L3 100A		**ED0025** pow. supply L1/L2/L3/N - 2500mm
		ED2753 N 100A		
MDRC - Various apparatus		(top power supply)	(low power supply)	
		ED2894 L1/N 16A	**ED2910** L1/N 16A	**ED3108** pow. supply 2 cables L1/N 16A
		ED2902 L1/L2 16A	**ED2928** L1/L2 16A	**ED3116** pow. supply 3 cables L1/L2/L3 16A
				ED3124 pow. supply 4 cables L1/L2/L3/N 16A
				ED3355 pow. supply 2 cables L1/N 40A
				ED3363 pow. supply 3 cables L1/L2/L3 40A
				ED3371 pow. supply 4 cables L1/L2/L3/N 71A
Tmax T1	Circuit-breaker	(top/bottom power supply)		
Tmax XT1		**ED2217** L1 Top/L2 Bottom		
		ED2225 L2 Top/L1 Bottom		
		ED2233 L3 Top/N Bottom		
		ED2241 N Top/L3 Bottom		
	Residual current	**ED2373** False pole module		
	Selenoid operator	**ED2381** False pole module		
Tmax T2	Circuit-breaker	(top/bottom power supply)		
		ED2258 L1 Top/L2 Bottom		
		ED2266 L2 Top/L1 Bottom		
		ED2274 L3 Top/N Bottom		
		ED2282 N Top/L3 Bottom		
	Residual current	**ED2373** False pole module		
	Selenoid operator	**ED2399** False pole module		
Tmax T3	Circuit-breaker	(top power supply)	(bottom power supply)	
Tmax XT3		**ED2290** L1	**ED2332** L1	
		ED2308 L2	**ED2340** L2	
		ED2316 L3	**ED2357** L3	
		ED2324 N	**ED2365** N	
	Residual current	**ED2373** False pole module		

For the DDA locks, order the false module ED2845 codes separately according to the size of the residual current lock.

If mounting XT1-XT3 on Unifix H, the polished flanges AD3301, AD3302, AD3303, AD3304 must also be ordered, see spare parts page 4/47.

> Selection by components page 4/21 > In-depth technical information page 6/1 > Overall dimensions page 7/1

ArTu M monobloc structures
Distribution systems

Unifix systems

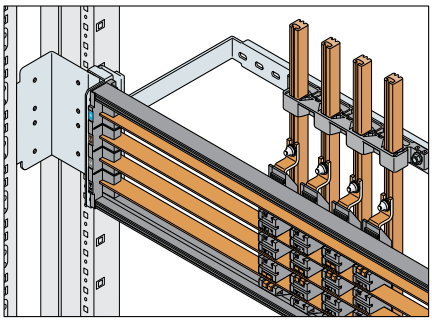

Direct connection with the 400/800A system of busbars with shaped section.

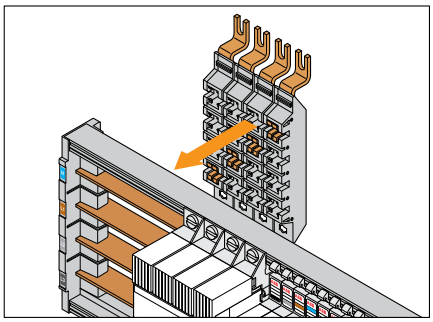

Feeder module for 400A frame (L1-L2-L3-N).

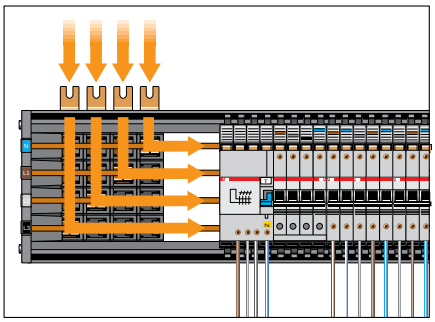

Direct power supply of the bases by means of feeder module ED2209.

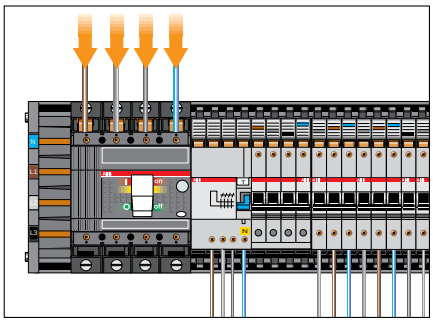

Power supply by means of general row circuit-breaker.

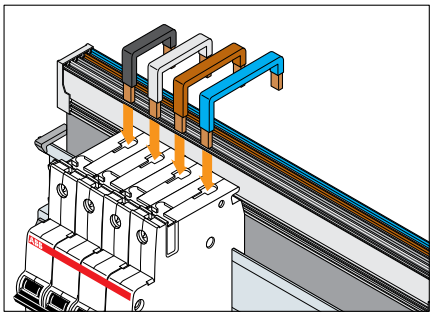

Connections (L1-L2-L3-N) for System Pro *M* modular apparatus.

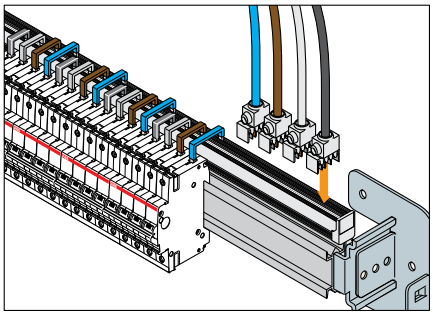

Power supply of the busbar with 100A feeder module without cable. Terminal capacity 35mm^2.

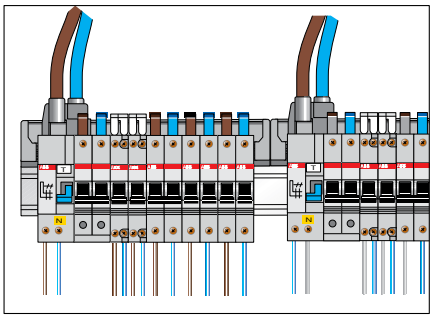

Direct power supply of the busbars by means of feeder module.

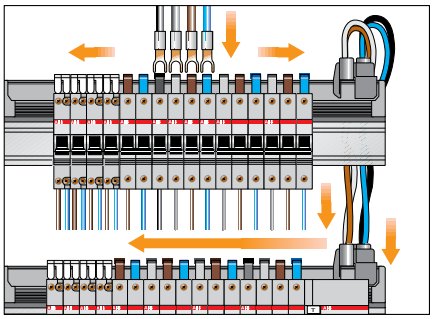

Power supply by means of modules and cables in parallel.

> Selection by components page 4/21 > In-depth technical information page 6/1 > Overall dimensions page 7/1

ArTu M monobloc structures
Ordering codes

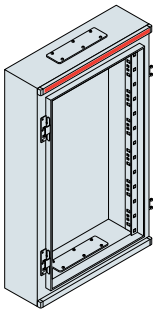

Wall-mounted structures

Basic version

Dimensions (mm) H	D	Code			Package/ No. of pieces
Monobloc structure 24 DIN mod - W=600mm					
600	115	SM6061			1/1
800	115	SM8061			1/1
800	165	SM8062			1/1
1000	165	SM1062			1/1
1200	165	SM1262			1/1

4

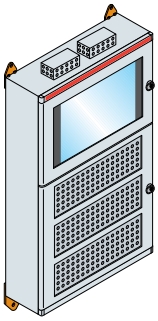

IP40 version for operating theatre

The QSO switchgear for operating theatres is complete with brackets (AD1009 No. 4 pieces) for installation of the wiring duct, two DIN rail kits (GD6002 and PM2624 No. 2 pieces) and relative brackets for wall fixing (4 pieces), 2 air passage filters and closing box with Yale insert.

Dimensions (mm) H	D	Code			Package/ No. of pieces
Monobloc structure 24 DIN mod - W=600mm					
1000	165	SM1069			1/1

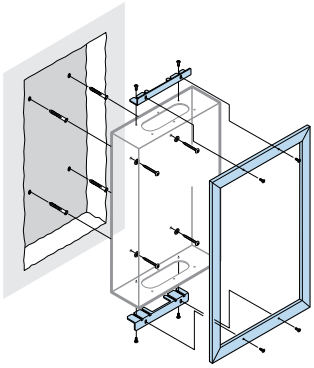

Embedding frame

Dimensions (mm) H	W	Code			Package/ No. of pieces
600	600	H70001			1/1
800	600	H70002			1/1
1000	600	H70003			1/1
1200	600	H70004			1/1

> Rapid selection table page 4/4 > In-depth technical information page 6/1 > Overall dimensions page 7/1

ArTu M monobloc structures
Ordering codes

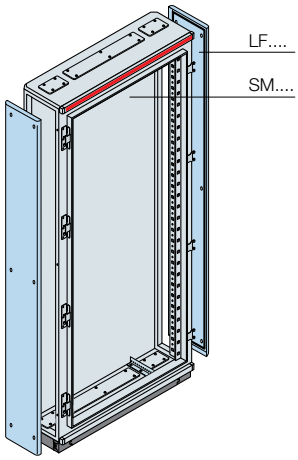

Floor-standing structures

Basic version

Dimensions (mm) H	D	Code			Package/ No. of pieces
Monobloc structure 24 DIN mod - W=600mm					
1400	195	SM1462			1/1
1600	195	SM1662			1/1
1800	195	SM1862			1/1
2000	195	SM2062			1/1
Monobloc structure 36 DIN mod - W=800mm					
1600	195	SM1682			1/1
1800	195	SM1882			1/1
2000	195	SM2082			1/1

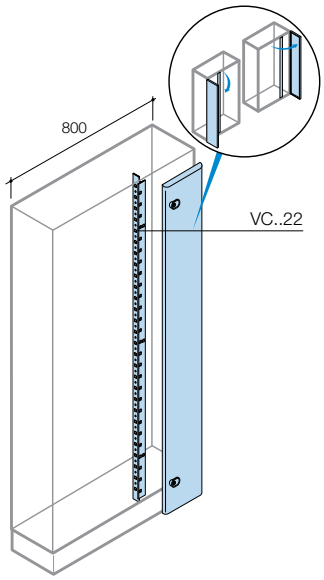

Internal cable container for floor-mounted structures

Only to be ordered for the 36 DIN mod. structures (W=800mm). Consisting of a functional upright and a blind door complete with two key locks. Can be mounted either on the right or left.

Dimensions (mm) H	D	W	Code			Package/ No. of pieces
Internal cable container for structure 36 DIN mod - W=800mm						
1600	195	200	VC1622			1/1
1800	195	200	VC1822			1/1
2000	195	200	VC2022			1/1

> Rapid selection table page 4/4 > In-depth technical information page 6/1 > Overall dimensions page 7/1

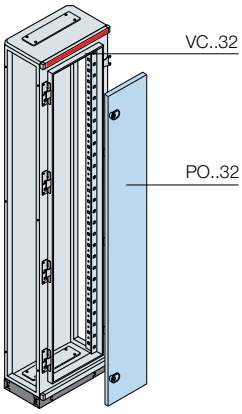

Floor-standing structures

External cable container

Can be mounted either on the right or left.

Dimensions (mm) H	D	W	Code			Package/ No. of pieces
External cable container						
1600	195	300	VC1632			1/1
1800	195	300	VC1832			1/1
2000	195	300	VC2032			1/1

The additional cable container can be completed in the following ways:

- IP65 version with external, internal door (optional).
- IP31 version with internal door and finishing section (see page 4/26)

IP31 internal door for external cable container

Dimensions (mm) H	W	Code			Package/ No. of pieces
1600	300	PO1631			1/1
1800	300	PO1831			1/1
2000	300	PO2031			1/1

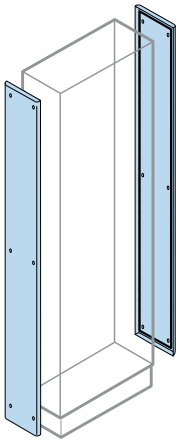

IP65 side panels for structures and additional cable container

Description	Dimensions (mm) H	D	Code			Package/ No. of pieces
No.2 side panels	1400	195	LF1425			1/2
No.2 side panels	1600	195	LF1625			1/2
No.2 side panels	1800	195	LF1825			1/2
No.2 side panels	2000	195	LF2025			1/2

> Rapid selection table page 4/4 > In-depth technical information page 6/1 > Overall dimensions page 7/1

ArTu M monobloc structures
Ordering codes

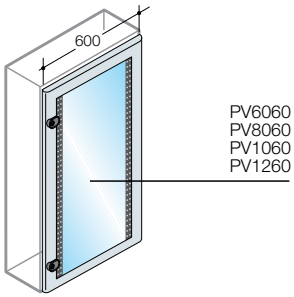

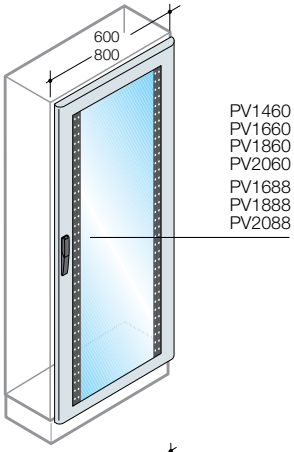

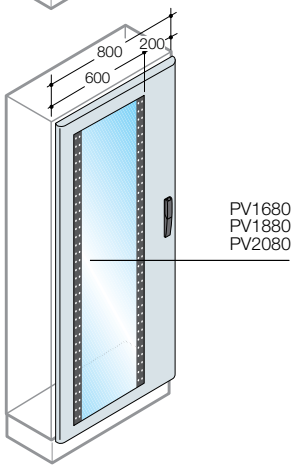

Wall-mounted/Floor-standing structures

IP65 front glass doors for structures

Glass door 24/36 mod.

Door made of 15/10 thick steel sheet with 4 mm thick safety glass fitted with polyurethane gasket complete with handle with key with double tab. Reversible, can be hinged on the right or left.

Dimensions (mm) H	W	Code			Package/ No. of pieces
Wall-mounted IP65 glass door - 24 DIN mod					
600	600	PV6060			1/1
800	600	PV8060			1/1
1000	600	PV1060			1/1
1200	600	PV1260			1/1
Floor-standing IP65 glass door - 24 DIN mod					
1400	600	PV1460			1/1
1600	600	PV1660			1/1
1800	600	PV1860			1/1
2000	600	PV2060			1/1
Floor-standing IP65 glass door - 36 DIN mod					
1600	800	PV1688			1/1
1800	800	PV1888			1/1
2000	800	PV2088			1/1
Floor-standing IP65 glass door - external cable container					
1600	300	PV1680			1/1
1800	300	PV1880			1/1
2000	300	PV2080			1/1

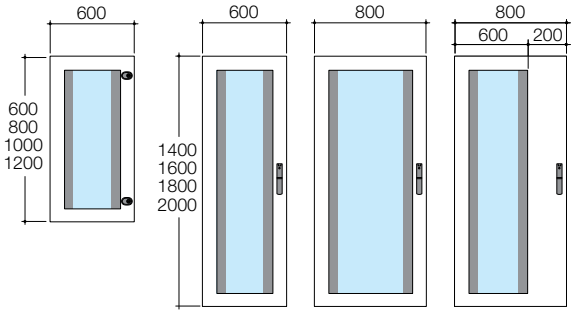

> Rapid selection table page 4/4 > In-depth technical information page 6/1 > Overall dimensions page 7/1

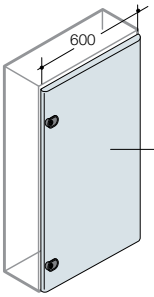

PO0660
PO0860
PO1060
PO1260

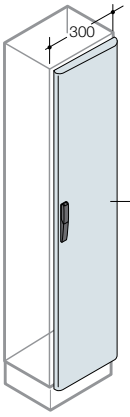

PC1402
PC1602
PC1802
PC2002

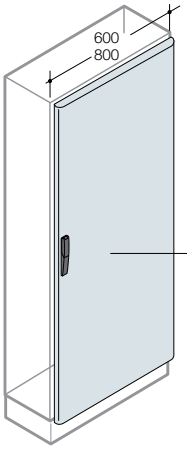

PO1460
PO1660
PO1860
PO2060
PO1680
PO1880
PO2080

Wall-mounted/Floor-standing structures

IP65 front blind doors for structures

Blind door 24/36 mod.

Door made of 15/10 thick steel sheet with 4 mm thick safety glass fitted with polyurethane gasket complete with handle with key with double tab. Reversible, can be hinged on the right or left.

Dimensions (mm) H	W	Code			Package/ No. of pieces
Wall-mounted IP65 glass door - 24 DIN mod					
600	600	PO6060			1/1
800	600	PO8060			1/1
1000	600	PO1060			1/1
1200	600	PO1260			1/1
Floor-standing IP65 glass door - 24 DIN mod					
1400	600	PO1460			1/1
1600	600	PO1660			1/1
1800	600	PO1860			1/1
2000	600	PO2060			1/1
Floor-standing IP65 glass door - 36 DIN mod					
1600	800	PO1680			1/1
1800	800	PO1880			1/1
2000	800	PO2080			1/1
Floor-standing IP65 glass door - external cable container					
1600	300	PO1630			1/1
1800	300	PO1830			1/1
2000	300	PO2030			1/1

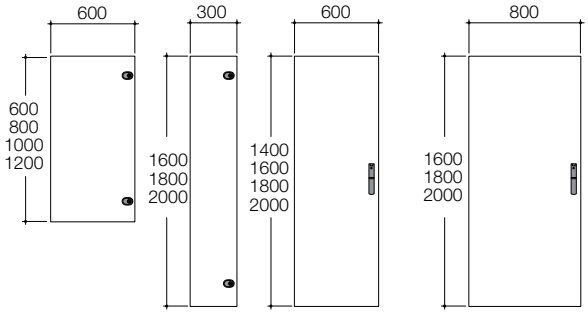

> Rapid selection table page 4/4 > In-depth technical information page 6/1 > Overall dimensions page 7/1

ArTu M monobloc structures
Ordering codes

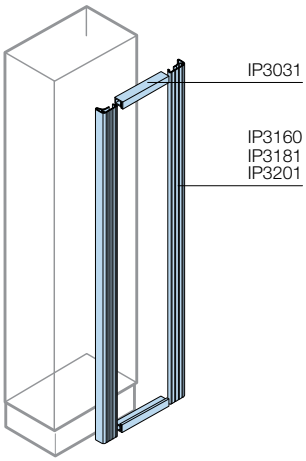

Wall-mounted/Floor-standing structures

IP 31 Finishing section

For IP31 version switchgear (without door), use the special finishing kits already sized for the standard heights and widths of ArTu switchgear. In the case of switchgear placed side by side, use the special double IP31 kit on the joining uprights.

Vertical sections

Description	Dimensions (mm) H	Code			Package/ No. of pieces
No.2 IP31 vertical finishing sections	1400	IP3140			1/2
No.2 IP31 vertical finishing sections	1600	IP3142			1/2
No.2 IP31 vertical finishing sections	1800	IP3160			1/2
No.2 IP31 vertical finishing sections	2000	IP3162			1/2
No.1 IP31double vertical finishing section	1400	IP3181			1/1
No.1 IP31double vertical finishing section	1600	IP3183			1/1
No.1 IP31double vertical finishing section	1800	IP3201			1/1
No.1 IP31double vertical finishing section	2000	IP3203			1/1

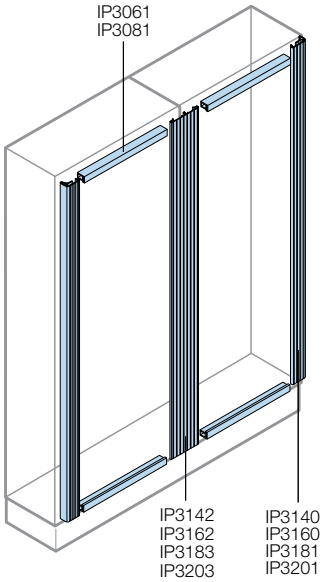

Horizontal sections

Description	Dimensions (mm) L	Code			Package/ No. of pieces
No.2 IP31 horizontal finishing sections	600	IP3061			1/2
No.2 IP31 horizontal finishing sections	800	IP3081			1/2
No.2 IP31 horizontal finishing sections	300	IP3031			1/2

> Rapid selection table page 4/4 > In-depth technical information page 6/1 > Overall dimensions page 7/1

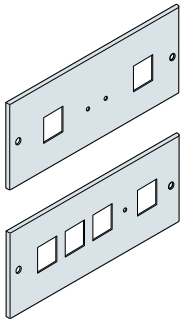

Kit for apparatus

Panels for square measuring instruments

Steel sheet panels complete with hinges placed on the right or left.

Description	Dimensions (mm) H	W	Code			Package/ No. of pieces
24 DIN mod - W=600mm						
Panel for 2 instruments 72x72mm	200	600	PS2720			1/1
Panel for 2 instruments 72x72mm			PS2960			1/1
Panel for 4 instruments 72x72mm			PS4720			1/1
Panel for 4 instruments 96x96mm			PS4960			1/1
36 DIN mod - W=800mm						
Panel for 2 instruments 72x72mm	200	800	PS2728			1/1
Panel for 2 instruments 72x72mm			PS2968			1/1
Panel for 4 instruments 72x72mm			PS4728			1/1
Panel for 4 instruments 96x96mm			PS4968			1/1

4

Leght 600/800mm

PS4720/PS4728/PS4960/PS4968

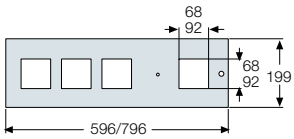

PS2720/PS2728/PS2960/PS2968

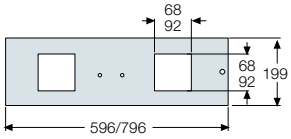

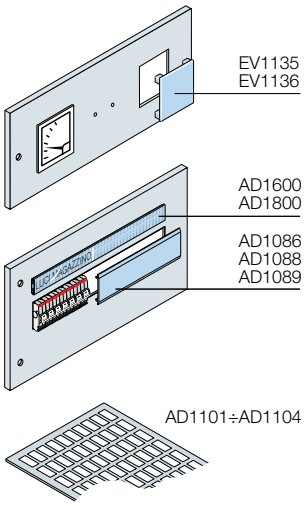

Accessories for panels

Description	Code			Package/ No. of pieces
No.10 holes covers W=2000mm grey RAL 7035 colour	AD1086			1/10
No.3 holes covers 24 Din modules grey RAL 7035 colour	AD1088			1/3
No.3 holes covers 36 Din modules grey RAL 7035 colour	AD1089			1/3
No.10 closing caps for instrument panel 72x72mm	EV1135			1/10
No.5 closing caps for instrument panel 96x96mm	EV1136			1/5
No.20 label-holders 24 DIN mod.	AD1600			1/20
No.20 label-holders 36 DIN mod.	AD1800			1/20
No.288 labels 1 mod. 15x17mm (HxW)	AD1101 (1)			1/288
No.192 labels 2 mod. 15x27mm (HxW)	AD1102 (1)			1/192
No.96 labels 3 mod. 15x50mm (HxW)	AD1103 (1)			1/96
No.96 labels 4 mod. 15x67mm (HxW)	AD1104 (1)			1/96

(1) Labels can be written with Grafoplast compatible plotter system.

> Rapid selection table page 4/4 > In-depth technical information page 6/1 > Overall dimensions page 7/1

ArTu M monobloc structures
Ordering codes

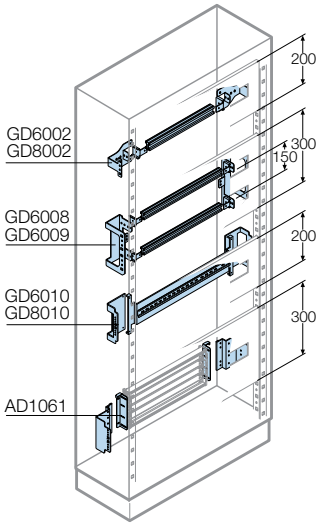

4

Kit for apparatus

DIN rail kits for System Pro-M modular apparatus, Tmax T1-T2-T3-XT1-XT3 moulded-case circuit-breakers and supports for Unifix H

DIN rail kit

Description	Dimensions (mm) W	Code			Package/ No. of pieces
24 DIN mod W=600mm					
DIN rail kit (aluminium)	600	GD6002			1/1
DIN rail kit centre dist. 150mm (2 DIN rows)		GD6008			1/1
DIN rail kit reinforced for Tmax RC		GD6010			1/1
DIN rail kit with accessories		GC6002 [1]			1/1
36 DIN mod W=800mm					
DIN rail kit (aluminium)	800	GD8002			1/1
DIN rail kit centre dist. 150mm (2 DIN rows)		GD6009			1/1
DIN rail kit reinforced for Tmax RC		GD8010			1/1
DIN rail kit with accessories		GC8002 [1]			1/1

[1] Din rail kit with accessories includes 60x80 wiring duct and related AD1037 fixing supports.

Supports for Unifix H

Description	Dimensions (mm) H	Code			Package/ No. of pieces
Fixing supports for Unifix H series for panel H=300mm	600/800	AD1061			1/1

> Rapid selection table page 4/4 > In-depth technical information page 6/1 > Overall dimensions page 7/1

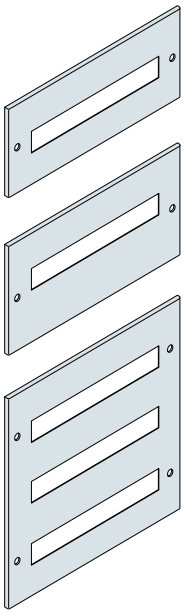

Kit for apparatus

Modular panels

Steel sheet panels complete with hinges placed on the right or left

Description	Dimensions (mm) H	W	Code			Package/ No. of pieces
24 DIN mod W=600mm						
Modular panel 1 DIN row	200	600	PM2624			1/1
Modular panel 1 DIN row - Tmax RC	300		PM2312			1/1
Modular panel 1 DIN row only for Unifix H	300		PM3624			1/1
Modular panel 2 DIN rows interaxis 150mm	300		PM3648			1/1
Modular panel 3 DIN rows	600		PM6672			1/1
36 DIN mod W=800mm						
Modular panel 1 DIN row	200	800	PM2836			1/1
Modular panel 1 DIN row - Tmax RC	300		PM2315			1/1
Modular panel 1 DIN row only for Unifix H	300		PM3836			1/1
Modular panel 2 DIN rows interaxis 150mm	300		PM3872			1/1

4

Width 600/800mm

PM3648/PM3872

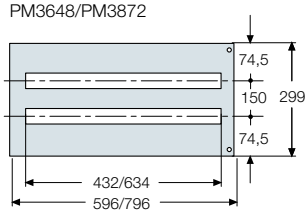

PM2624/PM2836

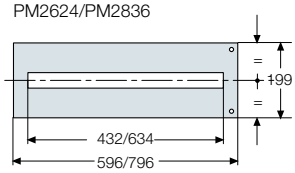

Version for Tmax with mod. diff.
PM2312/PM2315

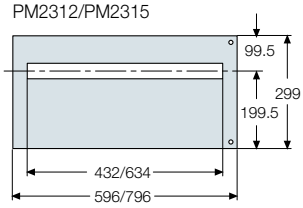

Version for Unifix H
PM3624/PM3836

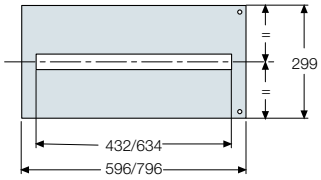

Width 600mm

PM6672

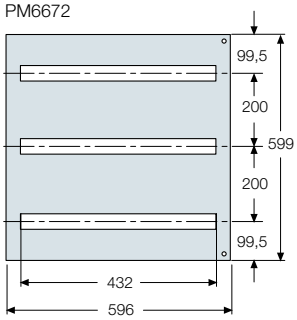

> Rapid selection table page 4/4 > In-depth technical information page 6/1 > Overall dimensions page 7/1

ArTu M monobloc structures
Ordering codes

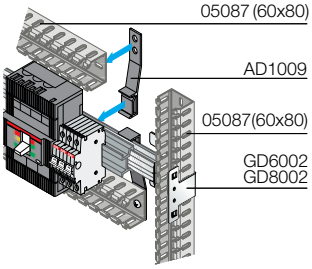

Kit for apparatus

Supports for duct

Description	Code			Package/ No. of pieces
No.4 plastic supports for horizontal duct	AD1009			1/4
No.4 metal supports for horizontal duct	AD1037			1/4

4

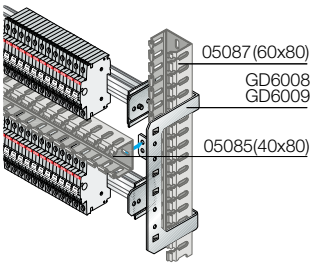

Depth adapters

Enables the depth of miniature circuit-breakers to be adapted to that of moulded-case circuit-breakers mounted on the same DIN rail.

Description	Dimensions (mm) W	Code			Package/ No. of pieces
No.1 depth adapter for Tmax T1-T2-T3 floor-standing	600	AP6000			1/1
No.1 depth adapter for Tmax T1-T2-T3 wall-mounting	600	AP6001			1/1

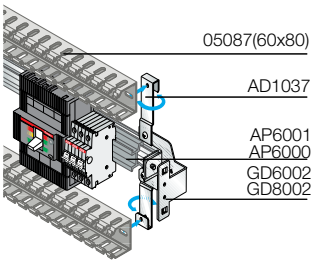

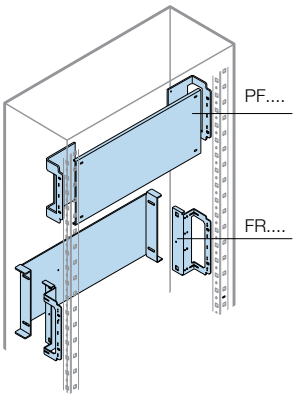

Blind back plates for and general apparatus

Description	Dimensions (mm) W	H	Code			Package/ No. of pieces
24 DIN mod W=600mm						
Blind back plate	600	200	PF2610[1]			1/1
Blind back plate		400	PF4610 [1]			1/1
Recessed blind back plate		200	FR2601			1/1
Recessed blind back plate		400	FR4601			1/1
36 DIN mod W=800mm						
Blind back plate	800	200	PF2810			1/1
Blind back plate		400	PF4810			1/1
Recessed blind back plate		200	FR2801			1/1
Recessed blind back plate		400	FR4801			1/1

[1] Also for wall-mounted ArTu M version D=200mm.The panels must be ordered separately.

> Rapid selection table page 4/4 > In-depth technical information page 6/1 > Overall dimensions page 7/1

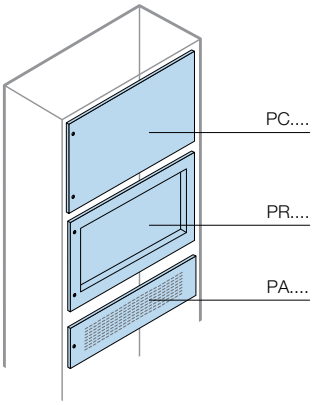

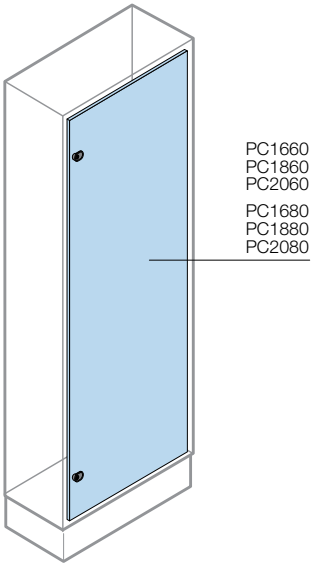

Kit for apparatus

Blind, recessed and ventilated panels for and general apparatus

Description	Dimensions (mm) W	H	Code			Package/ No. of pieces
24 DIN mod W=600mm						
Blind panel	600	100	PC1600			1/1
Blind panel		200	PC2600			1/1
Blind panel		300	PC3600			1/1
Blind panel		400	PC4600			1/1
Blind panel		600	PC6600			1/1
Blind panel		800	PC8600			1/1
Blind panel (Inner door)		1600	PC1660			1/1
Blind panel (Inner door)		1800	PC1860			1/1
Blind panel (Inner door)		2000	PC2060			1/1
Blind recessed panel		200	PR2600			1/1
Blind recessed panel		400	PR4600			1/1
Blind recessed panel		600	PR6600			1/1
Ventilated panel		100	PA1600			1/1
Ventilated panel		200	PA2600			1/1
36 DIN mod W=800mm						
Blind panel	800	100	PC1800			1/1
Blind panel		200	PC2800			1/1
Blind panel		300	PC3800			1/1
Blind panel		400	PC4800			1/1
Blind panel		600	PC6800			1/1
Blind panel		800	PC8800			1/1
Blind panel (Inner door)		1600	PC1680			1/1
Blind panel (Inner door)		1800	PC1880			1/1
Blind panel (Inner door)		2000	PC2080			1/1
Blind recessed panel		200	PR2800			1/1
Blind recessed panel		400	PR4800			1/1
Blind recessed panel		600	PR6800			1/1

> Rapid selection table page 4/4 > In-depth technical information page 6/1 > Overall dimensions page 7/1

ArTu M monobloc structures
Ordering codes

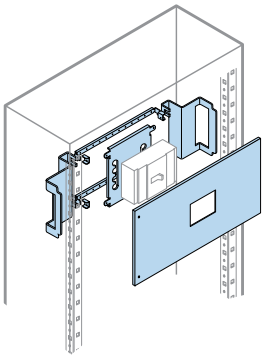

4

Kit for apparatus

Kits for installing Tmax circuit-breakers

Horizontal installation (front terminal)

Description	Dimensions (mm) H	W	Code			Package/ No. of pieces
24 DIN mod. - W=600mm						
Kit for T1 3-4 poles fixed	200		KT1117			1/1
Kit for T1 4 poles fixed + RC mod.	200		KT1102			1/1
Kit for T2 3-4 poles fixed	200		KT2117			1/1
Kit for T2 4 poles fixed + RC mod.	200		KT2102			1/1
Kit for T3 3-4 poles fixed	200		KT3112			1/1
Kit for T3 4 poles fixed + RC mod.	300		KT3102			1/1
Kit for T3 3-4 poles fixed	200		KT3118[1]			1/1
Kit for T4 3-4 poles fixed	200		KT4112			1/1
Kit for T4 4 poles fixed + RC mod.	200		KT4110			1/1
Kit for T4 3-4 poles fixed	300		KT5112			1/1
Kit for T5 4 poles fixed + RC mod.	300	600	KT5110			1/1
Kit for T6 3-4 poles fixed	500		KT6113			1/1
Kit XT1 3-4 poles fixed	200		KX1617[2]			1/1
Kit XT1 4 poles fixed + RC mod.	200		KX1602			1/1
Kit XT2 3-4 poles fixed	200		KX2619[2]			1/1
Kit XT2 4 poles fixed + RC mod.	200		KX2602			1/1
Kit XT3 3-4 poles fixed	200		KX3612[2]			1/1
Kit XT3 3-4 poles fixed	200		KX3618[1] [2]			1/1
Kit XT3 4 poles fixed + RC mod.	300		KX3602			1/1
Kit XT4 3-4 poles fixed	200		KX4612[2]			1/1
Kit XT4 4 poles fixed + RC mod.	200		KX4610			1/1
36 DIN mod. - W=800mm						
Kit for T2 4 poles fixed + RC mod.	200		KL2103			1/1
Kit for T3 3-4 poles fixed	200		KL3113			1/1
Kit for T3 4 poles fixed + RC mod.	300		KL3103			1/1
Kit for T4 3-4 poles fixed	200		KL4115			1/1
Kit for T4 4 poles fixed + RC mod.	200		KL4116			1/1
Kit for T4 3-4 poles fixed	300	800	KL5114			1/1
Kit for T5 4 poles fixed + RC mod.	300		KL5116			1/1
Kit for T6 3-4 poles fixed	500		KL6113[2]			1/1
Kit XT3 3-4 poles fixed	200		KL3613			1/1
Kit XT3 4 poles fixed + RC mod.	300		KX3603			1/1
Kit XT4 3-4 poles fixed	200		KX4615[2]			1/1

[1] Kit for wall ArTu M D=200mm.

[2] For 3 poles breakers please order accessory flange code AD3305 XT1 3P Flange for platemounting: AD3306 XT2 3P Flange for plate-mounting, AD3307 XT3 3P Flange for platemounting, AD3308 XT4 3P Flange for plate-mounting.

> Rapid selection table page 4/4 > In-depth technical information page 6/1 > Overall dimensions page 7/1

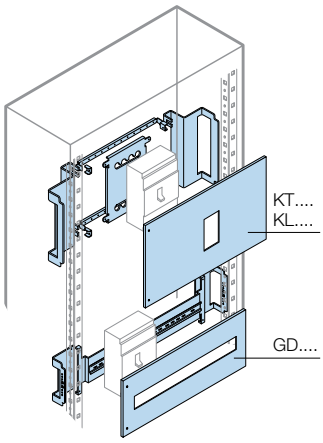

Kit for apparatus

Kits for installing Tmax circuit-breakers

Vertical installation (front terminal)

Description	Dimensions (mm) H	W	Code			Package/ No. of pieces
24 DIN mod. - W=600mm						
Kit on DIN rail for T1-T2-T3-XT1-XT3 3-4 poles fixed/RC.	200÷600		GD....[1]			1/1
Kit for T3 3-4 poles fixed	300		KT3212			1/1
Kit for T4 3-4 poles fixed	400		KT4212			1/1
Kit for T4 4 poles fixed + RC mod.	500		KT4102			1/1
Kit for T5 3-4 poles fixed	400		KT5212			1/1
Kit for T5 4 poles fixed + RC mod.	500		KT5102			1/1
Kit for T6 3-4 poles fixed	500		KT6213			1/1
Kit XT1 3-4 poles fixed	200	600	KX1618[4]			1/1
Kit XT1 4 poles fixed + RC mod.	300		KX1603			1/1
Kit XT1 N 3 CBs side by side	200		KX1604[4]			1/1
Kit XT1 N 3/4(3) CBs side by side	200		KX2604[2]			1/1
Kit XT3 3/4 poles fixed	300		KX3614[4]			1/1
Kit XT3 4 poles fixed + RC mod	300		KX3609			1/1
Kit XT4 3/4 poles fixed	300		KX4614[4]			1/1
Kit XT4 N 3/4(3) CBs side by side	300		KX4604[2]			1/1
Kit XT4 4 poles fixed + RC mod.	400		KX4602			1/1
36 DIN mod. - W=800mm						
Kit for T5 3-4 poles fixed	400		KL5212			1/1
Kit for T5 4 poles fixed + RC mod.	500	800	KL5102			1/1
Kit for T6 3-4 poles fixed	500		KL6213			1/1

[1] For the selection of kit for installation on DIN rail, see page 4/28

[2] Order AD3310, AD3311, AD3312, AD3313 polished flange, see page 4/7.

[3] No. 4 CBs side by side 3P, No. 3 CBs side by side 4P.

[4] For 3 poles breakers please order accessory flange code AD3305 XT1 3P Flange for platemounting: AD3306 XT2 3P Flange for plate-mounting, AD3307 XT3 3P Flange for platemounting, AD3308 XT4 3P Flange for plate-mounting.

Vertical

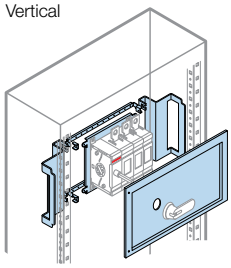

Horizontal

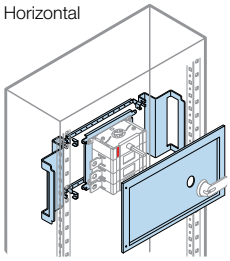

Kit for OT200÷400

Description	Dimensions (mm) H	W	Control	Code			Package/ No. of pieces
24 DIN mod. - W=600mm							
Kit for OT200/250/315/400 - horizontal installation	300	600	Lateral	K02260			1/1
Kit for OT200/250/315/400 - vertical installation	300	600	Lateral	K02261			1/1
36 DIN mod. - W=800mm							
Kit for OT200/250/315/400 - horizontal installation	300	800	Lateral	K02280			1/1
Kit for OT200/250/315/400 - vertical installation	300	800	Lateral	K02281			1/1

> Rapid selection table page 4/4 > In-depth technical information page 6/1 > Overall dimensions page 7/1

ArTu M monobloc structures
Ordering codes

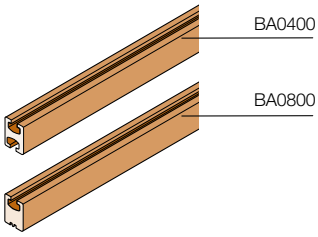

Distribution system

Distribution busbars with shaped section

Description	Dimensions (mm) W	Code			Package/ No. of pieces
Busbar In=400A	1730	BA0400			1/1
Busbar In=800A	1730	BA0800			1/1

4

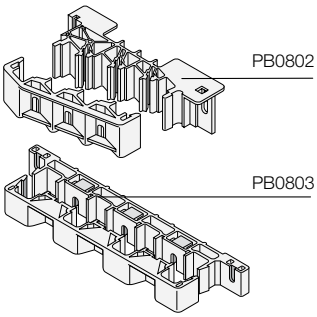

Busbar holders for busbars with shaped section

Description	Code			Package/ No. of pieces
Scaled				
Scaled busbar holder In=800A - 35kA	PB0802			1/1
Linear				
Linear busbar holder In=800A - 35kA	PB0803			1/1

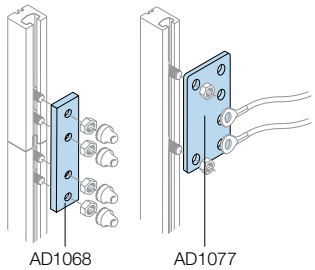

Joints for busbars with shaped section

Description	Code			Package/ No. of pieces
No.4 copper 400A branch joints	AD1077			1/4
No.4 joints for joining busbars with shaped section 400/800A	AD1068			1/4

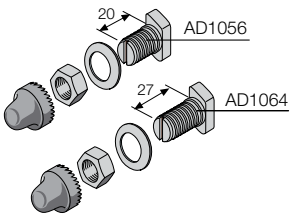

Hammer seal screws for busbars with shaped section

Description	Code			Package/ No. of pieces
No.12 M8 screws L=20mm for cable terminal	AD1056			1/12
No.12 M8 screws L=20mm for flat busbars up to 10mm, complete with screw-covering cap	AD1064			1/12

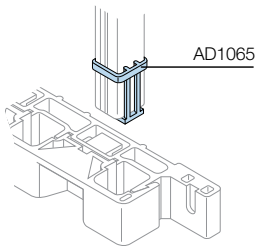

Resting bases for busbars with shaped section

Description	Code			Package/ No. of pieces
No.4 resting bases for 400/800A busbars	AD1065			1/4

> Rapid selection table page 4/4 > In-depth technical information page 6/1 > Overall dimensions page 7/1

Pic.1

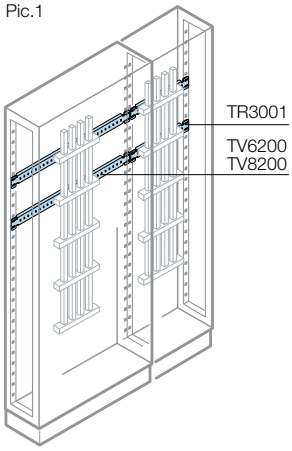

Pic.2

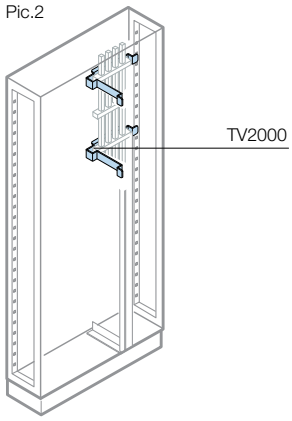

Pic.3

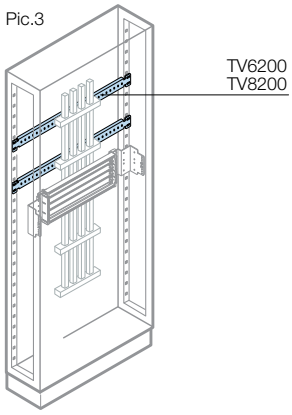

Distribution system

Crosspieces for busbars with shaped section 400/800A

Description	Mounting Pic.	Code			Package/ No. of pieces
Busbars vertically on back of structure					
No.2 crosspieces structure W=600mm with PB0803	1	TV6200			1/2
No.2 crosspieces structure W=800mm with PB0803	1	TV8200			1/2
Busbars vertically on back of structure of external cable container					
No.2 crosspieces back of cable container W=300mm with PB0802	1	TR3001			1/2
Busbars vertically in internal cable container					
No.2 internal cable container crosspieces W=200mm with PB0802	2	TV2000			1/2
Connection to Unifix H system					
No.2 structure crosspieces W=600mm with PB0803	3	TV6200			1/2
No.2 structure crosspieces W=800mm with PB0803	3	TV8200			1/2

> Rapid selection table page 4/4 > In-depth technical information page 6/1 > Overall dimensions page 7/1

ArTu M monobloc structures
Ordering codes

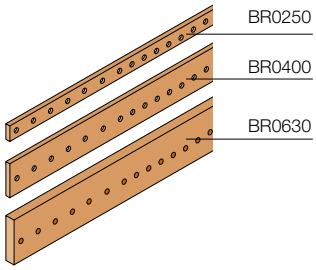

Distribution system

Flat busbar

Copper busbars 1750mm in length drilled. Can be used both with linear BP0630 and scaled BP0634 busbar holders.

Description	Dimensions (mm) W	In (A)	Code			Package/ No. of pieces
No.2 copper busbars 15x5	1750	250	BR0250			1/2
No.2 copper busbars 25x5		400	BR0400			1/2
No.2 copper busbars 30x10		630	BR0630			1/2

4

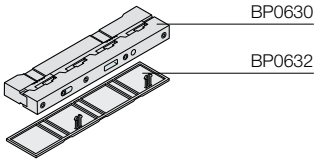

Busbar holders

Busbar holders in insulating self-extinguishing material, certified in conformity with the EN 60439-1 Standard for an Icc≤35kA

Description	Code			Package/ No. of pieces
No.2 linear busbar holders In=630A - 32kA	BP0630			1/1
No.2 terminal covers for linear busbar holders BP0630	BP0632			1/1

Pic.1

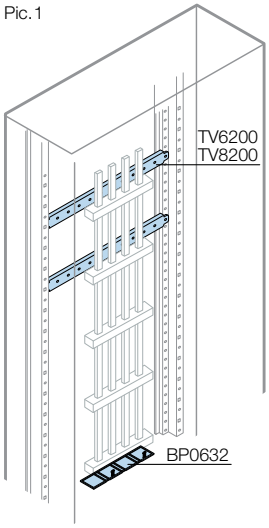

Crosspieces for flat busbars

Description	Mounting Pic.	Code			Package/ No. of pieces
Busbar vertically on back of structure or of cable container					
No.2 crosspieces back of structure W=600mm with BP4466	1	TV6200			1/2
No.2 crosspieces back of structure W=800mm with BP4466	1	TV8200			1/2
No.2 crosspieces back of cable container W=300mm with BP4466 or scaled BP4477	2	TV8200			1/2

Pic.2

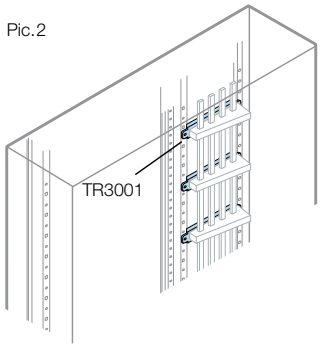

> Rapid selection table page 4/4 > In-depth technical information page 6/1 > Overall dimensions page 7/1

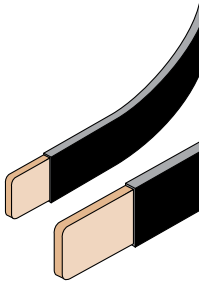

Distribution system

Flexible busbars

Flexible busbars insulated in self-extinguishing material

Description	Dimensions (mm) W	In (A)	Code			Package/ No. of pieces
No.2 flexible busbars, section 20x3	2000	250	BF1602			1/2
No.2 flexible busbars, section 20x5		400	BF2502			1/2
No.2 flexible busbars, section 24x6		500	BF4002			1/2
No.2 flexible busbars, section 32x5		630	BF4012 [1]			1/2

[1] Only for circuit-breakers with front extended terminals or rear terminals.

4

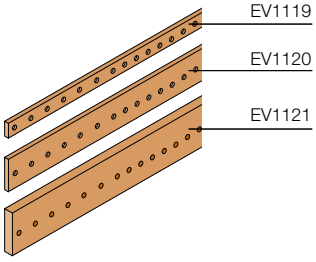

Earthing busbars

Copper busbars drilled and threaded for rapid connection of the conductors.

Description	Dimensions (mm) W	Code			Package/ No. of pieces
No.2 earthing busbars 20x5 threaded M6	2000	EV1119			1/2
No.2 earthing busbars 25x5 threaded M6		EV1120			1/2
No.2 earthing busbars 50x5 threaded M6		EV1121			1/2

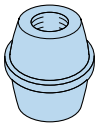

Insulators and copper busbars for neutral/earthing

Description	Code			Package/ No. of pieces
No.50 hexagonal insulators 30x30mm M6	EV1122			1/50
No.50 hexagonal insulators 30x30mm M8	EV1123			1/50
No.25 hexagonal insulators 36x50mm M6	EV1124			1/25
No.25 hexagonal insulators 36x50mm M8	EV1125			1/25

> Rapid selection table page 4/4 > In-depth technical information page 6/1 > Overall dimensions page 7/1

ArTu M monobloc structures
Ordering codes

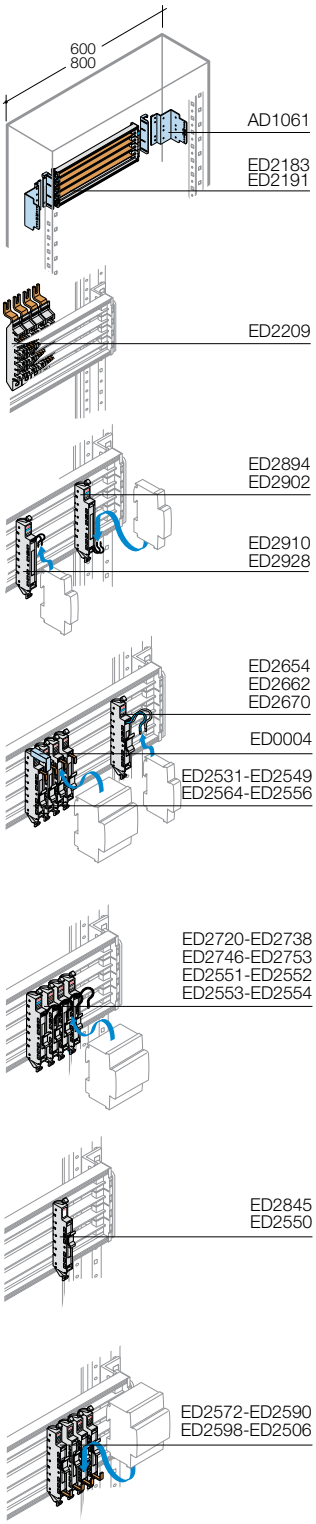

4

Distribution system

Unifix H

Description	Dimensions (mm) W	Code			Package/ No. of pieces
Frames for Tmax					
Frame with 24 DIN module busbar	600	ED2183			1/1
Frame with 36 DIN module busbar	800	ED2191			1/1
No.2 fixing brackets onto structure for ED2183 o ED2091		AD1061			1/2
Feeder modules					
4P 400A feeder module (for ED2183-ED2191)		ED2209			1/1
Basic modules I_n 16A					
Basic module for DIN L1-N top 16A		ED2894			1/1
Basic module for DIN L1-L2 top 16A		ED2902			1/1
Basic module for DIN L1-N bottom 16A		ED2910			1/1
Basic module for DIN L1-L2 bottom 16A		ED2928			1/1
Basic modules I_n 40A					
Basic module L1/Neutral top 40A		ED2654			1/1
Basic module L2/Neutral top 40A		ED2662			1/1
Basic module L3/Neutral top 40A		ED2670			1/1
Basic modules I_n 63A					
Basic module L1 top 63A		ED2531			1/1
Basic module L2 top 63A		ED2549			1/1
Basic module L3 top 63A		ED2556			1/1
Basic module Neutral top 63A		ED2564			1/1
Basic module L1 bottom 63A		ED2572			1/1
Basic module L2 bottom 63A		ED2590			1/1
Basic module L3 bottom 63A		ED2598			1/1
Basic module Neutral bottom 63A		ED2606			1/1
Basic modules I_n 100A					
Basic module with cable L1 top 100A		ED2720			1/1
Basic module with cable L2 top 100A		ED2738			1/1
Basic module with cable L3 top 100A		ED2746			1/1
Basic module with cable Neutral top 100A		ED2753			1/1
Basic modules ≤ I_n 40A S800					
Basic module L1 top ≤40A		ED2557			1/1
Basic module L2 top ≤40A		ED2558			1/1
Basic module L3 top ≤40A		ED2559			1/1
Basic module Neutral top ≤40A		ED2560			1/1
Basic modules ≤ I_n 125A S800					
Basic module L1 top 125A		ED2551			1/1
Basic module L2 top 125A		ED2552			1/1
Basic module L3 top 125A		ED2553			1/1
Basic module Neutral bottom 125A		ED2554			1/1
Basic module false pole W=27mm		ED2550			1/1

> Rapid selection table page 4/4 > In-depth technical information page 6/1 > Overall dimensions page 7/1

Distribution system

Unifix H

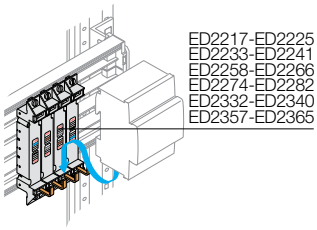

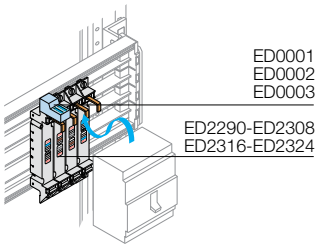

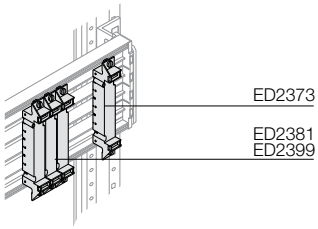

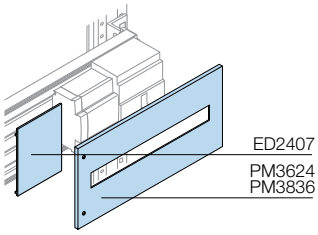

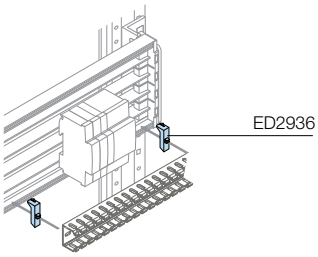

Description	Code			Package/ No. of pieces
Basic modules ≤ I_n 160A Tmax T1, Tmax XT1				
Basic module L1 top L2 bottom	ED2217			1/1
Basic module L2 top L1 bottom	ED2225			1/1
Basic module L3 top N bottom	ED2233			1/1
Basic module N top L3 bottom	ED2241			1/1
Basic module false pole for residual current release RC221	ED2373			1/1
Basic module false pole for solenoid operator	ED2381			1/1
Basic modules ≤ I_n 160A Tmax T2				
Basic module L1 top L2 bottom	ED2258			1/1
Basic module L2 top L1 bottom	ED2266			1/1
Basic module L3 top N bottom	ED2274			1/1
Basic module N top L3 bottom	ED2282			1/1
Basic module false pole for residual current release RC221	ED2373			1/1
Basic module false pole for solenoid operator	ED2399			1/1
Basic modules ≤ I_n 250A Tmax T3, Tmax XT3				
Basic module L1 top	ED2290			1/1
Basic module L2 top	ED2308			1/1
Basic module L3 top	ED2316			1/1
Basic module N top	ED2324			1/1
Basic module L1 bottom	ED2332			1/1
Basic module L2 bottom	ED2340			1/1
Basic module L3 bottom	ED2357			1/1
Basic module N bottom	ED2365			1/1
Basic module false pole for residual current release RC221	ED2373			1/1
Accessories				
Basic module false pole for DDA	ED2845			1/1
Basic module false pole for modular MDRC	ED2852			1/1
No.2 IP20 covers (for ED2183-ED2191) W=173mm (10 DIN modules)	ED2407			1/2
No.6 duct supports 40x60mm (only for modular apparatus)	ED2936			1/6
ArTu M Kit for ED2183 and ED2191	PM3624			1/1
Modular front panel 300x600mm (HxW)	PM3836			1/1
Modular front panel 300x800mm (HxW)				
No.10 terminal covers T1	ED0001			1/10
No.10 terminal covers T2	ED0002			1/10
No.10 terminal covers T3	ED0003			1/10
No.10 terminal covers S200/F200	ED0004			1/10

> Rapid selection table page 4/4 > In-depth technical information page 6/1 > Overall dimensions page 7/1

ArTu M monobloc structures
Ordering codes

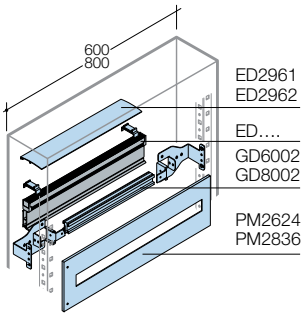

4

2 poles 4 poles

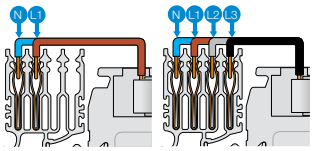

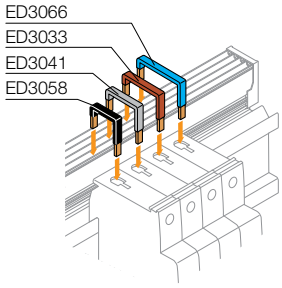

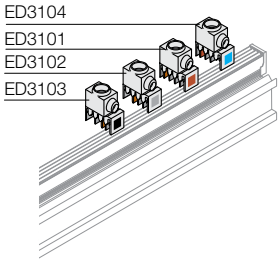

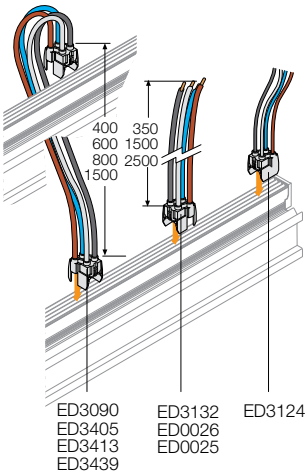

Distribution system
Unifix L

Description	Dimensions W (mm)	Code			Package/ No. of pieces
2-poles busbars					
100A 2P 8 module busbar	200	ED2985			1/6
100A 2P 12 module busbar	400	ED2993			1/6
100A 2P 18 module busbar	450	ED3009			1/6
100A 2P 24 module busbar	600	ED3017			1/6
100A 2P 36 module busbar	800	ED3025			1/6
4-poles busbars					
100A 4P 12 module busbar	400	ED2944			1/6
100A 4P 18 module busbar	450	ED2951			1/6
100A 4P 24 module busbar	600	ED2969			1/6
100A 4P 36 module busbar	800	ED2977			1/6
Connections for various apparatus					
Connection with 2 conductors L/N 16A		ED3108			1/6
Connection with 3 conductors L1/L2/L3 16A		ED3116			1/6
Connection with 4 conductors L1/L2/L3/N 16A single phase		ED3124			1/6
Connection with 2 conductors L1/N 40A		ED3355			1/6
Connection with 3 conductors L1/L2/L3 40A		ED3363			1/6
Connection with 4 conductors L1/L2/L3/N 40A		ED3371			1/6
Connections for apparatus					
No.10 connections L1-N 40 A		ED3272			1/10
No.10 connections L2-N 40 A		ED3280			1/10
No.10 connections L3-N 40 A		ED3298			1/10
No.10 connections L 1 100A		ED3033			1/10
No.10 connections L 2 100A		ED3041			1/10
No.10 connections L 3 100A		ED3058			1/10
No.10 connections N 100A		ED3066			1/10
Feeder with 4P 100A cable (W=350mm)		ED3132			1/10
Feeder with 4P 100A cable (W=1500mm)		ED0026			1/10
Feeder with 4P 100A cable (W=2500mm)		ED0025			1/10
Power supply modules with cable					
Parallel module 2P 100A with cable (W=600mm)		ED3082			1/6
Parallel module 4P 100A with cable (W=400mm)		ED3405			1/6
Parallel module 4P 100A with cable (W=600mm)		ED3090			1/6
Parallel module 4P 100A with cable (W=800mm)		ED3413			1/6
Parallel module 4P 100A with cable (W=1500mm)		ED3439			1/6
Power supply modules without cable In 100A					
No.10 single-pole power supply terminals L1		ED3101			1/10
No.10 single-pole power supply terminals L2		ED3102			1/10
No.10 single-pole power supply terminals L3		ED3103			1/10
No.10 single-pole power supply terminals N		ED3104			1/10
Accessories					
No.10 busbar covers (W=600mm)		ED2961			1/10
No.2 busbar covers (W=800mm)		ED2962			1/2
DIN rail Kit and supports (W=600mm)		GD1520			1/1
DIN rail Kit and supports (W=800mm)		GD1530			1/1
Modular front panel 200x600mm (HxW)		PM2624			1/1
Modular front panel 200x800mm (HxW)		PM2836			1/1

> Rapid selection table page 4/4 > In-depth technical information page 6/1 > Overall dimensions page 7/1

Accessories

Kits for placing structures side by side

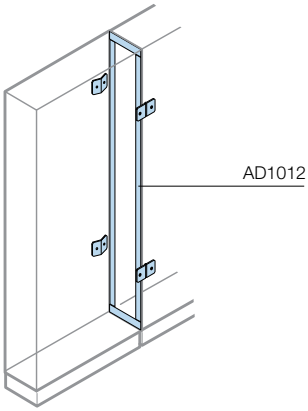

The ArTu M switchgear can be placed side by side laterally. The IP65 side-by-side kit consists of a set of supports and a gasket for keeping the degree of protection.
In the IP31 version, in addition to kit AD1012, order the double finishing section (see table on page 4/26).

Description	Code			Package/ No. of pieces
Kit for laterally placing structures side by side H=1400-1600-1800-2000mm	AD1012			1/1

4

Brackets for wall fixinge

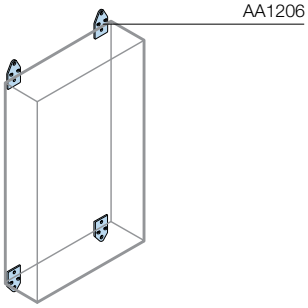

These allow ArTu M switchgear to be fixed to the wall.

Description	Code			Package/ No. of pieces
No. 4 wall fixing brackets	AA1206			1/4

Lifting eyebolts

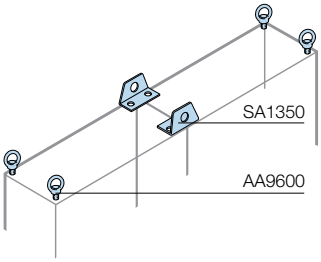

These allow cabled switchgear to be lifted. They are made of steel treated withwhite passivated galvanisation.

Description	Code			Package/ No. of pieces
No. 2 steel M12 lifting eyebolts	AA9600			1/2

Lifting reinforcements

Allow several pieces of ArTu M switchgear to be handled side by side.

Description	Code			Package/ No. of pieces
No.2 lifting reinforcements for side-by-side structures	SA1350			1/2

> Rapid selection table page 4/4 > In-depth technical information page 6/1 > Overall dimensions page 7/1

ArTu M monobloc structures
Ordering codes

Pic.1

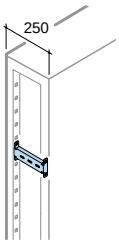

TR2001

Pic.2

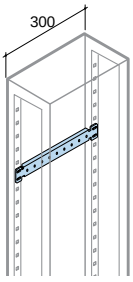

TR3001

Pic.3

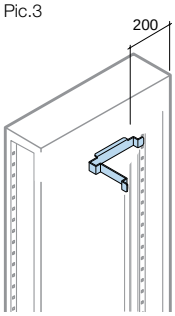

TR2000

Accessories

Crosspieces for accessories

Can be mounted on the structure to anchor the cables or to mount accessories. The crosspieces for accessories can be mounted on the side, on the rear or in the cable container of the structure.

Description	Mounting Pic.	Code			Package/ No. of pieces
No. 2 Structure lateral crosspieces D=250mm	1	TR2001			1/2
No. 2 External cable container rear crosspieces W=300mm	2	TR3001			1/2
No. 2 Internal cable container crosspieces W=200mm	3	TV2000			1/2

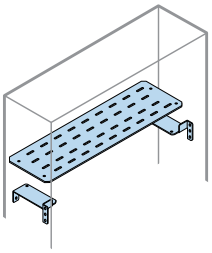

Horizontal shelf

Non-supporting horizontal shelf which allows separations to be made inside floormounted ArTu M switchgear. In structure with W=800 with internal cable container, use SH6001.

Description	Dimensions (mm) W	Code			Package/ No. of pieces
24 DIN mod					
Horizontal shelf for structure	600	SH6001			1/1
36 DIN mod					
Horizontal shelf for structure	600	SH8001			1/1

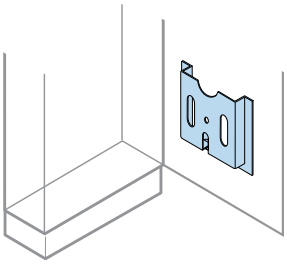

Diagram pocket

The diagram pocket (made of plastic RAL 2004 colour, dim. HxW 237x265mm type A4) is applied inside the blind doors/panels of suitable dimensions, using the adhesive provided.

Description	Code			Package/ No. of pieces
Plastic diagram pocket	AA5600			1/1

> Rapid selection table page 4/4 > In-depth technical information page 6/1 > Overall dimensions page 7/1

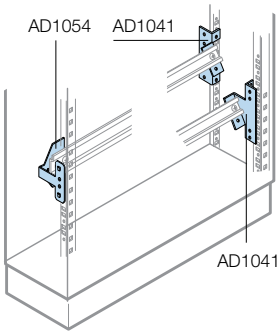

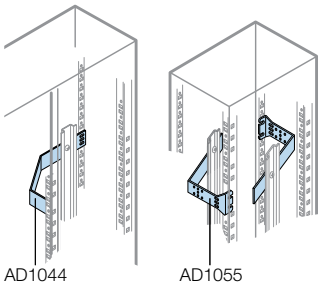

Accessories

Supports for terminal boxes

Description	Code			Package/ No. of pieces
Structure				
No. 2 supports for horizontal 45° angled terminal box	AD1041			1/2
No. 2 supports for horizontal terminal box	AD1054			1/2
Internal cable container				
No.4 supports for vertical terminal box	AD1044			1/4
Additional cable container				
No. 4 supports for vertical terminal box in internal/ additional cable container	AD1055			1/4

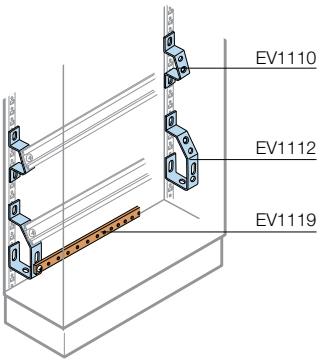

Angled supports for terminal boxes and earthing busbars

Description	Code			Package/ No. of pieces
No.50 angled supports 1 row of terminals	EV1110			1/50
No.10 angled supports 1 row of terminals	EV2110			1/10
No.50 angled supports 1 row of terminals + earth	EV1112			1/50
No.10 angled supports 1 row of terminals + earth	EV2112			1/10
No.2 angled supports 1 row of terminals + earth	EV1113			1/2

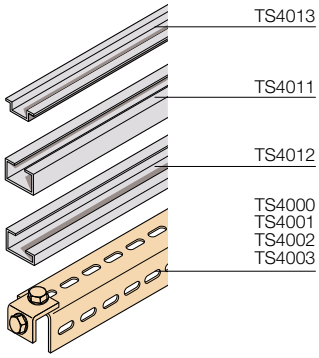

Sections for accessories

Description	Dimensions (mm) W	Code			Package/ No. of pieces
No.2 sections EN50024 C30	2000	TS4011			1/2
No.2 sections EN50035 G32	2000	TS4012			1/2
No.2 DIN sections EN50022	2000	TS4013			1/2
No.2 cable rails	600	TS4000			1/2
No.2 cable rails	800	TS4001			1/2
No.2 cable rails	1000	TS4002			1/2
No.2 cable rails	1200	TS4003			1/2

> Rapid selection table page 4/4 > In-depth technical information page 6/1 > Overall dimensions page 7/1

ArTu M monobloc structures
Ordering codes

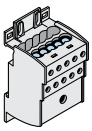
AD1080

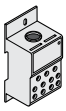
AD1081

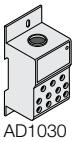
AD1030
AD1031

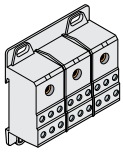
AD1075
AD1006

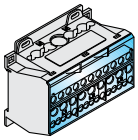
AD1004

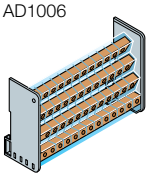
AD1028
AD1029

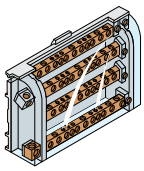
AD1027

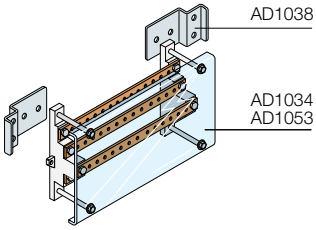

Accessories

Dividers

Description		Code			Package/ No. of pieces
Single-pole					
Modular 125A	UL	AD1076 (1)			1/1
Modular 125A	UL	AD1080 (2)			1/1
Modular 175A	UL	AD1007 (1)			1/1
Modular 175A	UL	AD1081 (2)			1/1
Modular 250A	UL	AD1030			1/1
Modular 125A	UL	AD1031			1/1
Modular 160A	UL	AD1027			1/1
Three-pole					
Modular 125A	UL	AD1075			1/1
Modular 175A	UL	AD1006			1/1
Four-pole					
Modular 125A		AD1004			1/1
Modular 125A-medium-93x89x48 (HxWxD)		AD1028			1/1
Modular 125A-large-96x126x48 (HxWxD)		AD1029			1/1
Modular 160A		AD1027			1/1
Horizontal 250A for structures W=600mm		AD1034			1/1
Horizontal 250A for structures W=800mm		AD1053			1/1

(1) 10 outputs - (2) 6 outputs

Amounting accessories

Description	Code			Package/ No. of pieces
Supports for fixing to the structure for AD1034 and AD1053	AD1038			1/1
Connection accessory between two AD1080	AD1083			1/1

> Rapid selection table page 4/4 > In-depth technical information page 6/1 > Overall dimensions page 7/1

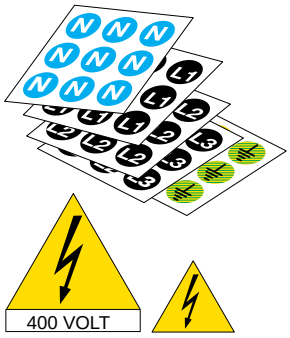

Accessories

Marking

Description	Code			Package/ No. of pieces
No.490 adhesive labels ø12mm symbol N	EV1150			1/490
No.490 adhesive labels ø12mm symbol L1	EV1151			1/490
No.490 adhesive labels ø12mm symbol L2	EV1152			1/490
No.490 adhesive labels ø12mm symbol L3	EV1153			1/490
No.490 adhesive labels ø12mm symbol T	EV1154			1/490
No.10 triangular adhesive labels 125mm with 400V lightning arrow symbol	EV1155			1/10
No.100 triangular adhesive labels 50mm with light-ning arrow symbol	EV1156			1/300

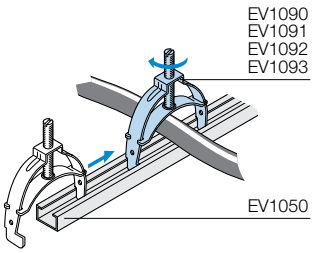

Brackets for anchoring cables

Adjustable cable blocking bracket can be mounted on sections with 10mm slot EV1050.

Description	Code			Package/ No. of pieces
No.10 cable blocking brackets min÷max ø 9÷16mm	EV1090			1/10
No.10 cable blocking brackets min÷max ø 16÷30mm	EV1091			1/10
No.5 cable blocking brackets min÷max ø 30÷48mm	EV1092			1/5
No.5 cable blocking brackets min÷max ø 48÷72mm	EV1093			1/5

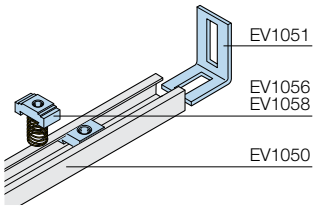

Aluminium sliding guides for universal uses

Description	Code			Package/ No. of pieces
No.10 aluminium supporting sections 30x15 – W=2000mm	EV1050			1/10
No.25 fixing brackets for EV1050	EV1051			1/25
No.100 aluminium M6 nuts for EV1050	EV1056			1/100
No.100 aluminium M8 nuts for EV1050	EV1058			1/100

> Rapid selection table page 4/4 > In-depth technical information page 6/1 > Overall dimensions page 7/1

ArTu M monobloc structures
Ordering codes

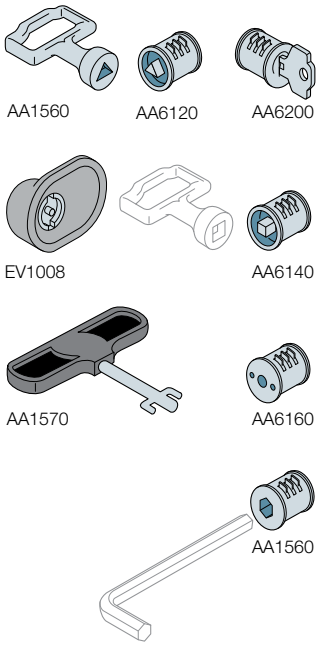

Accessories
Inserts and keys

Description	Code			Package/ No. of pieces
Wall-mounted structures and cable container				
Box + Yale insert (without tab)	EV1008			1/1
Insert + Yale key for EV1008	EV1036			1/1
Ronis 455 insert + key for EV1008	EV1037			1/1
3mm double-tab insert + key for EV1008	EV1039			1/1
Floor-mounted structures				
Double-tab insert	AA6100			1/1
Double-tab Zn+Al+Mg alloy key	AD1058			1/1
Yale insert + key	AA6200			1/1
Male 6.4 triangular insert on ø 7.6	AA6120			1/1
Triangular key	AA1560			1/1
Male 7square type insert; key not available	AA6140			1/1
Hexagonal 8 type insert embedded; key not available	AA6180			1/1
FIST type insert (FIAT)	AA6160			1/1
Fiat key	AA1570			1/1
Ronis E739 insert + key	AA8004			1/1

> Rapid selection table page 4/4 > In-depth technical information page 6/1 > Overall dimensions page 7/1

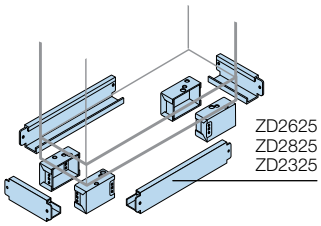

Accessories

Spare parts

Description	Code			Package/ No. of pieces
No.10 hinges + screws for panels (spare part ACP468)	AD1090			1/10
No.10 plug + door key kits (spare part APT002)	AD1091			1/10
Chimes for door H=1400mm (spare part)	CA1401			1/1
Chimes for door H=1600mm (spare part)	CA1600			1/1
Chimes for door H=1800mm (spare part)	CA1800			1/1
Chimes for door H=2000mm (spare part)	CA2000			1/1
No.50 three-lobed M6 spare screws	AD1033			1/50
RAL 7035 colour spray paint for touching up (400 ml spray can)	VB7035			1/1
“ArTu Survival Kit” - Accessories and small items for spare parts	PV4060			1/1
Glass door for switchgear for operating theatres	PO6069			1/1
Blind door for switchgear for operating theatres	AD1022			1/1
ArTu handle complete with lock and cover	AD1070			1/10
No.10 Artu handle covers	AZ4000			1/4
No.4 base strip angle pieces H=100mm	ZD2625			1/1
Base strip consisting of 4 angle pieces and 4 flanges	ZD2825			1/1
Base strip consisting of 4 angle pieces and 4 flanges	ZD2325			1/1
Base strip consisting of 4 angle pieces and 4 flanges	AD1036			1/20
RAL 7035 colour spray paint for touching up (400 ml spray can)	VB7035			1/1
Polished flange for XT1 3P mounted on DIN rail	AD3301			1/1
Polished flange for XT1 4P mounted on DIN rail	AD3302			1/1
Polished flange for XT3 3P mounted on DIN rail	AD3303			1/1
Polished flange for XT3 4P mounted on DIN rail	AD3304			1/1

> Rapid selection table page 4/4 > In-depth technical information page 6/1 > Overall dimensions page 7/1

ArTu M monobloc structures
Examples of configurations

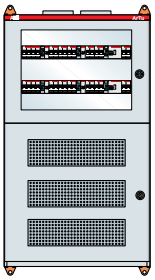

4

ArTu M Series dim. 1100x600x200 (1130x700x200)mm (external hxwxd) IP65 with modular panels

Code	Description	Q.ty
SM1069	ArTu M structure 1000x600x200mm (hxwxd) QSO + acc.	1

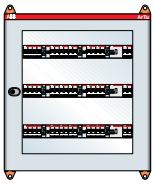

ArTu M Series dim. 600x600x150 (700x700x150) mm (external hxwxd) IP65 with modular panels

Code	Description	Q.ty
SM6061	ArTu M structure 600x600x150mm (hxwxd)	1
PM6672	Panel 72 mod.600x600mm (hxw) M, K	1
GD6002	DIN rail kit not segregated 24 mod. w=600mm, K	3
PV6060	Glass door 600x600mm (hxw) M	1
AA1206	N °4 wall fixing brackets M	1

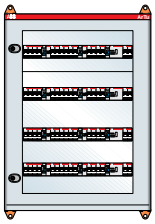

ArTu M Series dim. 800x600x150 (900x700x150) mm (external hxwxd) IP65 with modular panels

Code	Description	Q.ty
SM8061	ArTu M structure 800x600x150mm (hxwxd)	1
PM2624	Panel 24 mod.200x600mm (hxw) M, K	1
PM6672	Panel 72 mod.600x600mm (hxw) M, K	1
GD6002	DIN rail kit not segregated 24 mod. w=600mm, K	4
PV8060	Glass door 800x600mm (hxw) M	1
AA1206	N °4 wall fixing brackets M	1

> Rapid selection table page 4/4 > In-depth technical information page 6/1 > Overall dimensions page 7/1

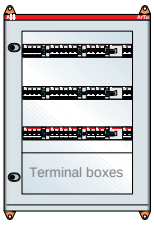

ArTu M Series dim. 800x600x200 (900x700x200) mm (external hxwxd) IP65 with modular panels

Code	Description	Q.ty
SM8062	ArTu M structure 800x600x200mm (hxwxd)	1
PC2600	Panel 24 mod.200x600mm (hxw) M, K	1
PM6672	Panel 72 mod.600x600mm (hxw) M, K	1
GD6002	DIN rail kit not segregated 24 mod. w=600mm, K	3
PV8060	Glass door 800x600mm (hxw) M	1
AA1206	N °4 wall fixing brackets M	1

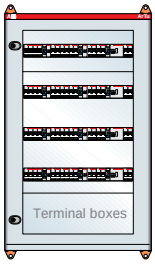

ArTu M Series dim. 1000x600x200 (1000x700x200) mm (external hxwxd) IP65 with modular panels

Code	Description	Q.ty
SM1062	ArTu M structure 1000x600x200mm (hxwxd)	1
PC2600	Blind panel 200x600mm (hxw) M, K	1
PM2624	Panel 24 mod.200x600mm (hxw) M, K	1
PM6672	Panel 72 mod.600x600mm (hxw) M, K	1
GD6002	DIN rail kit not segregated 24 mod. w=600mm, K	4
PV1060	Glass door 1000x600mm (hxw) M	1
AA1206	N °4 wall fixing brackets M	1

> Rapid selection table page 4/4 > In-depth technical information page 6/1 > Overall dimensions page 7/1

ArTu M monobloc structures
Examples of configurations

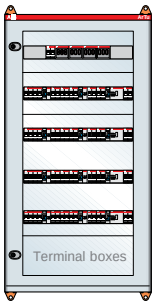

4

ArTu M Series dim. 1200x600x200 (1300x700x200) mm (external hxwxd) IP65 with modular panels

Code	Description	Q.ty
SM1262	ArTu M structure 1200x600x200mm (hxwxd)	1
PC2600	Blind panel 200x600mm (hxw) M, K	1
PM2624	Panel 24 mod.200x600mm (hxw) M, K	2
PM6672	Panel 72 mod.600x600mm (hxw) M, K	1
GD6002	DIN rail kit not segregated 24 mod. w=600mm, K	5
PV1260	Glass door 1200x600mm (hxw) M	1
AA1206	N °4 wall fixing brackets M	1

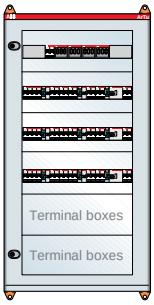

ArTu M Series dim. 1200x600x200 (1300x700x200) mm (external hxwxd) IP65 with modular panels

Code	Description	Q.ty
SM1262	ArTu M structure 1200x600x200mm (hxwxd)	1
PC2600	Blind panel 200x600mm (hxw) M, K	2
PM2624	Panel 24 mod.200x600mm (hxw) M, K	4
GD6002	DIN rail kit not segregated 24 mod. w=600mm, K	4
PV1260	Glass door 1200x600mm (hxw) M	1
AA1206	N °4 wall fixing brackets M	1

> Rapid selection table page 4/4 > In-depth technical information page 6/1 > Overall dimensions page 7/1

ArTu M Series dim. 1400x600x250 (1596x724x250) mm (external hxwxd) IP65 with modular panels

Code	Description	Q.ty
SM1462	ArTu M structure 1400x600x250mm (hxwxd)	1
PC4600	Blind panel 400x600mm (hxw) M, K	1
PM2624	Panel 24 mod.200x600mm (hxw) M, K	2
PM6672	Panel 72 mod.600x600mm (hxw) M, K	1
GD6002	DIN rail kit not segregated 24 mod. w=600mm, K	5
PV1460	Glass door 1400x600mm (hxw) M	1
LF1425	No. 2 side panels 1400x250mm (hxd) M	1
AA1206	N °4 wall fixing brackets M	1

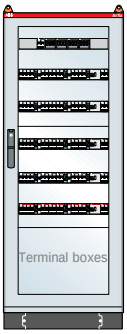

ArTu M Series dim. 1600x600x250 (1796x724x250) mm (external hxwxd) IP65 with modular panels

Code	Description	Q.ty
SM1662	ArTu M structure 1600x600x250mm (hxwxd)	1
PC4600	Blind panel 400x600mm (hxw) M, K	1
PM6672	Panel 72 mod.600x600mm (hxw) M, K	2
GD6002	DIN rail kit not segregated 24 mod. w=600mm, K	6
PV1660	Glass door 1600x600mm (hxw) M	1
LF1625	No. 2 side panels 1600x250mm (hxd) M	1
AA1206	N °4 wall fixing brackets M	1

> Rapid selection table page 4/4 > In-depth technical information page 6/1 > Overall dimensions page 7/1

ArTu M monobloc structures
Examples of configurations

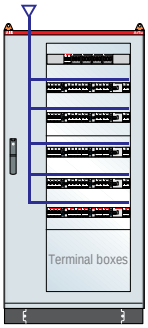

4

ArTu M Series dim. 1600x800x250 (1796x924x250) mm (external hxwxd) IP65 with modular panels

Code	Description	Q.ty
SM1682	ArTu M structure 1600x800x250mm (hxwxd)	1
PC4600	Blind panel 400x600mm (hxw) M, K	1
PM6672	72 mod. Panel 600x600mm (hxw) M, K	2
GD6002	DIN rail kit not segregated 24 mod. w=600mm, K	6
PV1680	Glass door 1600x800mm (hxl) M	1
VC1622	Internal cable container 1600x200x250mm M	1
LF1625	No.2 side panels 1600x250mm (hxd) M	1
AA1206	N °4 wall fixing brackets M	1

> Rapid selection table page 4/4 > In-depth technical information page 6/1 > Overall dimensions page 7/1

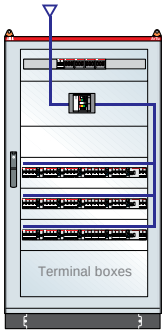

ArTu M Series dim. 1600x800x250 (1796x924x250) mm (external hxwxd) IP65 with plate for Tmax T5 and modular panels

Code	Description	Q.ty
SM1682	ArTu M structure 1600x800x250mm (hxwxd)	1
PC2800	Blind panel 200x800mm (hxw) M, K	1
PC3800	Blind panel 300x800mm (hxw) M, K	1
KL5114	T5 horiz. fixed kit 300x800mm (hxw), M, K	1
PM2836	Panel 36 mod.200x800mm (hxw) M, K	4
GD8002	DIN rail kit not segregated 36 mod. w=800mm, K	4
PV1688	Glass door 36 mod. 1600x800mm (hxw) M	1
LF1625	No. 2 side panels 1600x250mm (hxd) M	1
AA1206	N °4 wall fixing brackets M	1

> Rapid selection table page 4/4 > In-depth technical information page 6/1 > Overall dimensions page 7/1

ArTu M monobloc structures
Examples of configurations

4

ArTu M Series dim. 1800x600x250 (1996x724x250) mm (external hxwxd) IP65 with plate for Tmax T3-XT3 and modular panels, complete with 400A vertical busbars on back of structure - max. Icw 35kA

Code	Description	Q.ty	Code	Description	Q.ty
Tmax T kit			**Tmax XT kit**		
SM1862	ArTu M structure 1800x600x250mm (hxwxd)	1	SM1862	ArTu M structure 1800x600x250mm (hxwxd)	1
KT3112	T3 3/4P horiz. fixed kit not segregated M, K250	1	KX3612	XT3 3/4P horiz. fixed kit not segregated M, K250	1
PC2600	Blind panel 200x600mm (hxw) M, K	1	PC2600	Blind panel 200x600mm (hxw) M, K	1
PC4600	Blind panel 400x600mm (hxw) M, K	1	PC4600	Blind panel 400x600mm (hxw) M, K	1
PM2624	Panel 24 mod.200x600mm (hxw) M, K	2	PM2624	Panel 24 mod.200x600mm (hxw) M, K	2
PM6672	Panel 72 mod.600x600mm (hxw) M, K	1	PM6672	Panel 72 mod.600x600mm (hxw) M, K	1
GD6002	DIN rail kit not segregated 24 mod. w=600mm, K	5	GD6002	DIN rail kit not segregated 24 mod. w=600mm, K	5
PV1860	Glass door 1800x600mm (hxw) M	1	PV1860	Glass door 1800x600mm (hxw) M	1
LF1825	No. 2 side panels 1800x250mm (hxd) M	1	LF1825	No. 2 side panels 1800x250mm (hxd) M	1
AA1206	N °4 wall fixing brackets M	1	AA1206	N °4 wall fixing brackets M	1
PB0803	Linear busbar holder In=800A (35kA)	5	PB0803	Linear busbar holder In=800A (35kA)	5
BA0400	Busbar In=400A	4	BA0400	Busbar In=400A	4
TV6200	No. 2 rear crosspieces w=600mm	3	TV6200	No. 2 rear crosspieces w=600mm	3
AD1064	No.12 joining screw M8 W=27mm flat busbars up to10mm	1	AD1064	No.12 joining screw M8 W=27mm flat busbars up to10mm	1

> Rapid selection table page 4/4 > In-depth technical information page 6/1 > Overall dimensions page 7/1

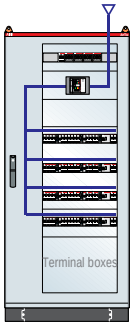

ArTu M Series dim. 1800x800x250 (1996x924x250) mm (external hxwxd) IP65 with plate for Tmax T3-XT3 and modular panels, complete with 800A vertical busbars on back of internal cable container - max. Icw 35kA

Code	Description	Q.ty	Code	Description	Q.ty
Tmax T kit			**Tmax XT kit**		
SM1882	ArTu M structure 1800x800x250mm (hxwxd)	1	SM1882	ArTu M structure 1800x800x250mm (hxwxd)	1
KT3112	T3 3/4P horiz. fixed kit not segregated M, K250	1	KX3612	XT3 3/4P horiz. fixed kit not segregated M, K250	1
PC2600	Blind panel 200x600mm (hxw) M, K	1	PC2600	Blind panel 200x600mm (hxw) M, K	1
PC4600	Blind panel 400x600mm (hxw) M, K	1	PC4600	Blind panel 400x600mm (hxw) M, K	1
PM2624	Panel 24 mod.200x600mm (hxw) M, K	2	PM2624	Panel 24 mod.200x600mm (hxw) M, K	2
PM6672	Panel 72 mod.600x600mm (hxw) M, K	1	PM6672	Panel 72 mod.600x600mm (hxw) M, K	1
GD6002	DIN rail kit not segregated 24 mod. w=600mm, K	5	GD6002	DIN rail kit not segregated 24 mod. w=600mm, K	5
PV1880	Glass door 1800x800mm (hxw) M	1	PV1880	Glass door 1800x800mm (hxw) M	1
LF1825	No. 2 side panels 1800x250mm (hxd) M	1	LF1825	No. 2 side panels 1800x250mm (hxd) M	1
VC1822	Int. cable container 1800x200x250mm M	1	VC1822	Int. cable container 1800x200x250mm M	1
AA1206	N °4 wall fixing brackets M	1	AA1206	N °4 wall fixing brackets M	1
PB0802	Scaled busbar holder In=800A (35kA)	5	PB0802	Scaled busbar holder In=800A (35kA)	5
BA0800	Busbar In=800A	4	BA0800	Busbar In=800A	4
TV2000	No. 2 rear crosspieces w=200mm	3	TV2000	No. 2 rear crosspieces w=200mm	3
AD1064	No.12 joining screw M8 W=27mm flat busbars up to10mm	1	AD1064	No.12 joining screw M8 W=27mm flat busbars up to10mm	1

> Rapid selection table page 4/4 > In-depth technical information page 6/1 > Overall dimensions page 7/1

ArTu M monobloc structures
Examples of configurations

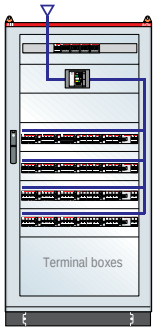

4

ArTu M Series dim. 1800x800x250 (1996x924x250) mm (external hxwxd) IP65 with plate for Tmax T3-XT3 and modular panels, complete with 800A vertical busbars on back of structure - max. Icw 35kA

Code	Description	Q.ty	Code	Description	Q.ty
Tmax T kit			**Tmax XT kit**		
SM1882	ArTu M structure 1800x800x250mm (hxwxd)	1	SM1882	ArTu M structure 1800x800x250mm (hxwxd)	1
PC2800	Blind panel 200x800mm (hxw) M, K	1	PC2800	Blind panel 200x800mm (hxw) M, K	1
PC4800	Blind panel 400x800mm (hxw) M, K	1	PC4800	Blind panel 400x800mm (hxw) M, K	1
KL3113	T3 3/4P horiz. fixed kit not segregated M, K250	1	KL3613	XT3 3/4P horiz. fixed kit not segregated M, K250	1
PM2836	Panel 36 mod.200x800mm (hxw) M, K	5	PM2836	Panel 36 mod.200x800mm (hxw) M, K	5
GD8002	DIN rail kit not segregated 36 mod. w=800mm, K	5	GD8002	DIN rail kit not segregated 36 mod. w=800mm, K	5
PV1888	Glass door 36 mod. 1800x800mm (hxw) M	1	PV1888	Glass door 36 mod. 1800x800mm (hxw) M	1
LF1825	No. 2 side panels 1800x250mm (hxd) M	1	LF1825	No. 2 side panels 1800x250mm (hxd) M	1
AA1206	N °4 wall fixing brackets M	1	AA1206	N °4 wall fixing brackets M	1
PB0803	Linear busbar holder In=800A (35kA)	5	PB0803	Linear busbar holder In=800A (35kA)	5
BA0800	Busbar In=800A	4	BA0800	Busbar In=800A	4
TV8200	No. 2 rear crosspieces w=800mm	3	TV8200	No. 2 rear crosspieces w=800mm	3
AD1064	No.12 joining screw M8 W=27mm flat busbars up to10mm	1	AD1064	No.12 joining screw M8 W=27mm flat busbars up to10mm	1

> Rapid selection table page 4/4 > In-depth technical information page 6/1 > Overall dimensions page 7/1

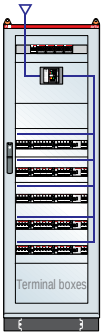

ArTu M Series dim. 2000x600x250 (2196x724x250) mm (external hxwxd) IP65 with plate for Tmax T5 and modular panels, complete with 400A vertical busbars on back of structure - max. Icw 35kA

Code	Description	Q.ty
SM2062	ArTu M structure 2000x600x250mm (hxwxd)	1
KT5112	T5 horiz. fixed kit 300x600mm (hxw) M, K	1
PC2600	Blind panel 200x600mm (hxw) M, K	1
PC3600	Blind panel 300x600mm (hxw) M, K	1
PM2624	Panel 24 mod.200x600mm (hxw) M, K	3
PM6672	Panel 72 mod.600x600mm (hxw) M, K	1
GD6002	DIN rail kit not segregated 24 mod. w=600mm, K	6
PV2060	Glass door 2000x600mm (hxw) M	1
LF2025	No. 2 side panels 2000x250mm (hxd) M	1
AA1206	N °4 wall fixing brackets M	1
PB0803	Linear busbar holder In=800A (35kA)	5
BA0800	Busbar In=800A	4
TV6200	No. 2 rear crosspieces w=600mm	3
AD1064	No.12 joining screw M8 W=27mm flat busbars up to10mm	1

> Rapid selection table page 4/4 > In-depth technical information page 6/1 > Overall dimensions page 7/1

ArTu M monobloc structures
Examples of configurations

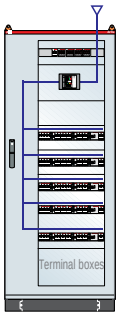

4

ArTu M Series dim. 2000x800x250 (2196x924x250) mm (external hxwxd) IP65 with plate for Tmax T5 and modular panels, complete with 800A vertical busbars on back of internal cable container - max. Icw 35kA

Code	Description	Q.ty
SM2082	ArTu M structure 2000x800x250mm (hxwxd)\	1
KT5112	T5 horiz. fixed kit 300x800mm (hxw) M, K	1
PC2600	Blind panel 200x600mm (hxw) M, K	1
PC3600	Blind panel 300x600mm (hxw) M, K	1
PM2624	Panel 24 mod.200x600mm (hxw) M, K	3
PM6672	Panel 72 mod.600x600mm (hxw) M, K	1
GD6002	DIN rail kit not segregated 24 mod. w=600mm, K	6
PV2080	Glass door 2000x800mm (hxw) M	1
LF2025	No. 2 side panels 2000x250mm (hxd) M	1
VC2022	Int. cable container 2000x200x250mm M	1
AA1206	N °4 wall fixing brackets M	1
PB0802	Scaled busbar holder In=800A (35kA)	5
BA0800	Busbar In=800A	4
TV2000	No. 2 rear crosspieces w=200mm	3
AD1064	No.12 joining screw M8 W=27mm flat busbars up to10mm	1

> Rapid selection table page 4/4 > In-depth technical information page 6/1 > Overall dimensions page 7/1

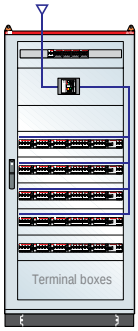

ArTu M Series dim. 2000x800x250 (2196x924x250)mm (external hxwxd) IP65 with plate for Tmax T5 and modular panels, complete with 800A vertical busbars on back of structure- max. Icw 35kA

Code	Description	Q.ty
SM2082	ArTu M structure 2000x800x250mm (hxwxd)	1
PC2800	Blind panel 200x800mm (hxw) M, K	1
PC3800	Blind panel 300x800mm (hxw) M, K	1
KL5114	T5 horiz. fixed kit 300x800mm (hxw) M, K	1
PM2836	Panel 36 mod.200x800mm (hxw) M, K	6
GD8002	DIN rail kit not segregated 36 mod. w=800mm, K	6
PV2088	Glass door 36 mod. 2000x800mm (hxw) M	1
LF2025	No. 2 side panels 2000x250mm (hxd) M	1
AA1206	N °4 wall fixing brackets M	1
PB0803	Linear busbar holder In=800A (35kA)	5
BA0800	Busbar In=800A	4
TV8200	No. 2 rear crosspieces w=800mm	3
AD1064	No.12 joining screw M8 W=27mm flat busbars up to10mm	1

> Rapid selection table page 4/4 > In-depth technical information page 6/1 > Overall dimensions page 7/1

ArTu K Modular Structures

General 5/2
Selection of the structure 5/6
Kit for installing apparatus 5/16
Distribution systems 5/40
Ordering Code 5/53
Examples of configurations 5/108

5

ArTu K Modular Structures
General

The structure is made entirely of hot galvanised steel sheet, which guarantees the equipotentiality of the switchgear.

The K series of ArTu switchgear consists of a series of components for configuration of floor-standing kit switchgear, with the following dimensions:

- **three heights (useful)**
  1600 mm (16 modules of 100 mm), 1800 mm (18 modules of 100 mm) and 2000 mm (20 modules of 100 mm) to which the h=100mm base strip measurement fitted with removable flanges must always be added;
- **four widths (useful)**
  390mm (12 DIN modules), 600 mm (24 DIN modules), 800 mm (36 or 24 DIN) and 1000 mm (48 or 36 DIN modules + cable riser);
- **six depths (useful)**
  150 mm (for Tmax T6 up to fixed 630A S6) 225mm (for Tmax up to fixed 800A S6), 300mm (for Tmax T7 1600A), 500 mm (for Tmax to fixed T71600A), 700mm (for Emax up to withdrawable E3 3200A) and 900mm (for Emax up to withdrawable E6 6300A). Tmax XT series can be installed in each one of the above-mentioned depths.

The structure is made entirely of hot galvanised steel sheet, which guarantees the equipotentiality of the switchgear. Base and top are supplied pre-mounted by means of a three-way joint, which is able to provide considerable structural rigidity. Base and top

The ArTu switchgear doors are made of 15/10 steel sheet for blind versions or with 4 mm thick glass fitted with gasket able to grant IP65 degree of protection.

are supplied pre-mounted by means of a three-way joint, which is able to provide considerable structural rigidity. The base is fitted with removable flanges which allow entry into the areas reserved for the cables and a pre-mounted (H=100mm) base strip, consisting of four angle irons with removable over the whole perimeter. The four uprights are fitted with a multi-purpose hinge used to assemble the door and to couple the structures, both laterally and at the rear.
The structure is completed with two types of functional frames, fitted with reference nicks (at 100 mm pitch) to avoid annoying measurements during assembly of the apparatus kits:
- open functional frame (can be used in switchgear where no form of segregation is required);
- closed functional frame (can be used in switchgear where forms 2-3 and 4 segregation are required).

The switchgear is completed with:
- blind (IP65) and ventilated (IP41) type side panels;
- blind and transparent doors, fitted with safety glass which can be mounted on all sides (IP65).
- kit for installing the apparatus, designed to integrate enclosure structures and circuit-breaker perfectly .
  The mounting positions are established previously so as to guarantee the insulation distances and perfect alignment of the apparatus on the front panel. Furthermore, the kit plates are of the self-centring type and are fitted with threaded bushings to provide easy assembly of the apparatus from the front.
- DIN rail kit consisting of a drawn piece of aluminium able to resist the load of the circuit-breakers fitted with fixing brackets

ArTu K Modular Structures
General

Additional structure 300mm wide are available, which can be used as cable containers placed side by side laterally with all the ArTu K switchgear.

(patented), preset to house the vertical and horizontal cabling duct. The aluminium DIN rail has three established mounting positions, corresponding respectively to the, T and XT series depths of the System Pro M, Tmax and Isomax circuit-breakers. It is fitted with double DIN 35 section (front and rear), and the rear part can be used to support the duct, up to 60x80mm;
- kit for air circuit-breakers consisting of sturdy supporting crosspieces and of the front panel;
- universal kits, consisting of back plates and blind front panels, which allow assembly of generic apparatus.

The panels have vertical 100mm modularity and are fitted with an invisible hinge on the outside, which can be mounted either on the right or on the left, and which guarantees panel earthing, making the equipotential connection superfluous.
The DIN panels are also available in the versions for one, two or three rows, corresponding to heights of 200, 300 and 600mm respectively and can have 150/200mm centre distance between the rows.
In the case of modular and moulded-case circuit-breakers placed side by side in the same row, the special section must be used which allows the assembly position of the circuit-breakers to be adapted correctly so that the same modular panel can be used.
When the circuit-breakers do not take up the whole window of the panel, the spaces can be closed using the hole covers.
Within the K series of ArTu switchgear with 500, 700 and 900mm

Within the K series of ArTu switchgear with 500, 700 and 900mm depths, segregation compartments of Form 2, 3 and 4 can be made in conformity with the IEC 60439-1 Standard.

depths, segregation compartments of Form 2, 3 and 4 can be made in conformity with the IEC 60439-1 Standard, for the whole range of moulded-case circuit-breakers with rear terminals, simply by using the closed functional frame, the installation kits in the segregated version and the special segregations.

The distribution systems, which can be used inside the ArTu switchgear, consist of:
- shaped section busbars up to 3200A;
- flat busbars up to 6300A;
- flexible busbars;
- Unifix cabling system, structured up to 400A;
- dividers up to 400A.

The extremely compact dimensions of the system allow the busbars to be mounted directly inside the switchgear, positioning them horizontally or vertically, on the back or on the side of the structure, keeping front access, also thanks to the practicality of the scaled type busbar holder.

The panels have vertical 100mm modularity and are fitted with an invisible hinge on the outside, which can be mounted either on the right or on the left, and which guarantees panel earthing, making the equipotential connection superfluous.

The extremely compact dimensions of the system allow the busbars to be mounted directly inside the switchgear, positioning them horizontally or vertically, on the back or on the side of the structure.

Technical characteristics

Compliance with Standards	CEI EN 60439-1/IEC 61439-1-2
Test of vibration for structure ArTu K	according to IEC 60068-2-57 Standard
Test of antiseismic	according to IEE Std 693 Standard
Rated service voltage Ue	up to 1000 V
Rated insulation voltage Ui	up to 1000 V
Rated frequency	50-60 Hz
Rated impulse withstand voltage Uimp	8 kV
Rated current In	up to 6300 A
Rated short-time short-circuit withstand current Icw	up to 105 kA
Rated peak short-circuit current Ipk	up to 254 kA
Degree of protection IP	31 without door
	41 without door with accessories
	65 with door up to 4000A
	41 with door up to 6300A

ArTu K Modular Structures
Selection of the structure

Rapid selection tables

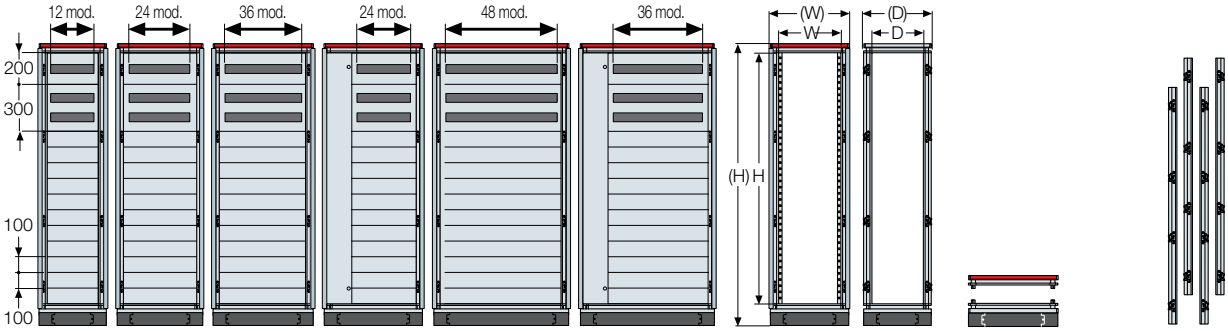

5

Structure hight 1600/1800mm

No. mod. vert.mod H=100mm	No. DIN modules installable		External overall dimensions [1]			Functional dimensions [2]			Base Top Base strip	Side flangers base strip	Upright
	DIN panel 150mm centre dist.	DIN panel 200mm centre dist.	(H) mm	(W) mm	(D) [3] mm	H mm	W mm	D [3] mm		To be ordered separately	
16	240 (24x10)	192 (24x8)	1831	748	287	1600	600	150	SK6025	ZD1015	SK1600
	360 (36x10)	236 (36x8)		948			800		SK8025	ZD1015	
18	144 (12x12)	108 (12x9)	2031	538	362	1800	390	225	SK4040	ZD1025	SK1800
				538	437		390	300	SK4050	ZD1030	
				538	637		390	500	SK4060	ZD1050	
				538	837		390	700	SK4080	ZD1070	
				538	1037		390	900	SK4010	ZD1090	
	288 (24x12)	216 (24x9)		748	287		600	150	SK6025	ZD1015	
				748	362		600	225	SK6040	ZD1025	
				748	437		600	300	SK6050	ZD1030	
				748	637		600	500	SK6060	ZD1050	
				748	837		600	700	SK6080	ZD1070	
				748	1037		600	900	SK6010	ZD1090	
	432 (36x12)	324 (36x9)		948	287		800	150	SK8025	ZD1015	
				948	362		800	225	SK8040	ZD1025	
				948	437		800	300	SK8050	ZD1030	
				948	637		800	500	SK8060	ZD1050	
				948	837		800	700	SK8080	ZD1070	
				948	1037		800	900	SK8010	ZD1090	
		432 (48x9)		1148	1037		1000	900	SK1010	ZD1090	

[1] The overall external dimensions of the ArTu K switchgear include the base strip h=100mm and the side panels, each 14mm wide.

[2] The functional dimensions represent the useful space for installing the apparatus.

[3] In this catalogue, reference is always made to the following depths: functional 150/225/300/500/700/900 mm external 287/362/437/637/837/1037 mm.

[4] The VC.... code is already complete with the functional frame, therefore it is not necessary to order other open or closed functional frames. Furthermore, the internal cable container is only built with 800/1000mm wide structures The rear intermediate upright SK2080 (H=2000mm) in switchgear without segregation must be ordered separately if necessary for fixing onto the back of crosspieces, accessories, busbars, etc

The positioning of two structures or a structure and a cable container side-by-side is realized by the AD1014 kit. When selecting the components, the characteristics of the apparatus to be mounted inside the switchgear must be taken into consideration, opting for the open frame and cable container when no form of segregation is required and, on the contrary, for the closed frame and cable container when forms of segregation from 2 to 4 are required. According to the type of covering selected, the degree of protection varies from IP31/41 (switchgear without front door) to IP65 (switchgear with front door and blind side panels).
The functional frames of ArTu K switchgear are available in two versions:
- switchgear without segregation (open frame) in cases where no form of segregation is required;
- segregated switchgear (closed frame) in cases where forms 2-3 and 4 segregation are required

> Selection by components page 5/53 > In-depth technical information page 6/1 > Overall dimensions page 7/1

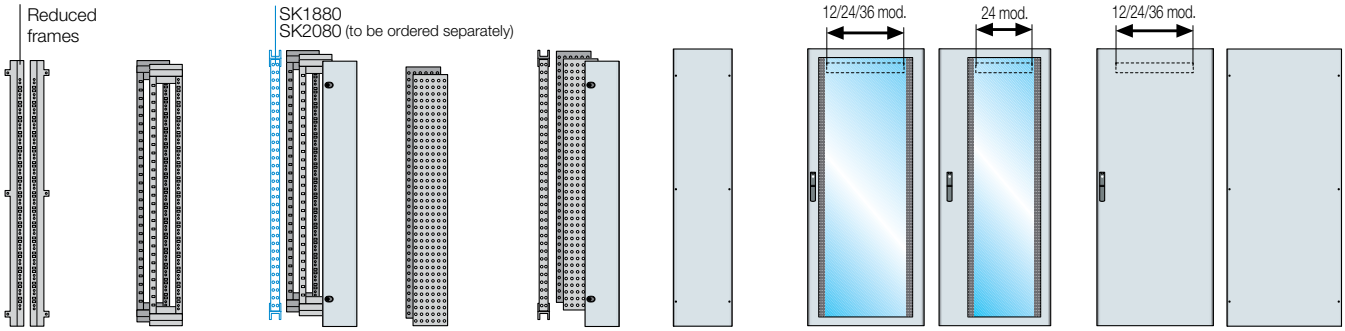

	Functional frames switchgear without segregation			Functional frames for segregated switchgear		Side coverings front and rear coverings IP65				
	Solution 1 Open frame	Solution 2 Open frame	Solution 3 [4] Internal cable container	Solution 1 Closed frame	Solution 2 [4] Internal cable container	Side panel	Glass door 12/24/36/48 mod.	Glass door 24/36 mod. + int. cable cont.	Blind door 12/24/36/48 mod.	Rear panel
	SK1604 [5]	-	-	-	-	LF1626	PV1661	-	PO1661	RF1660
	SK1604 [5]	-	VC1624	-	-	LF1626	PV1682	PV1681	PO1681	RF1680
	SK1804 [6]	SK1803	-	-	-	LF1840	PV1841	-	PO1841	RF1840
	SK1804 [6]	SK1803	-	-	-	LF1850	PV1841	-	PO1841	RF1840
	SK1804 [6]	SK1803	-	SK1802	-	LF1860	PV1841	-	PO1841	RF1840
	SK1804 [6]	SK1803	-	SK1802	-	LF1880	PV1841	-	PO1841	RF1840
	SK1804 [6]	SK1803	-	SK1802	-	LF1810	PV1841	-	PO1841	RF1840
	SK1804 [5]	-	-	-	-	LF1826	PV1861	-	PO1861	RF1860
	SK1804 [6]	SK1803	-	-	-	LF1840	PV1861	-	PO1861	RF1860
	SK1804 [6]	SK1803	-	-	-	LF1850	PV1861	-	PO1861	RF1860
	SK1804 [6]	SK1803	-	SK1802	-	LF1860	PV1861	-	PO1861	RF1860
	SK1804 [6]	SK1803	-	SK1802	-	LF1880	PV1861	-	PO1861	RF1860
	SK1804 [6]	SK1803	-	SK1802	-	LF1810	PV1861	-	PO1861	RF1860
	SK1804 [5]	-	VC1824	-	-	LF1826	PV1882	PV1881	PO1881	RF1880
	SK1804 [6]	SK1803	VC1824	-	-	LF1840	PV1882	PV1881	PO1881	RF1880
	SK1804 [6]	SK1803	VC1824	-	-	LF1850	PV1882	PV1881	PO1881	RF1880
	SK1804 [6]	SK1803	VC1823	SK1802	VC1820	LF1860	PV1882	PV1881	PO1881	RF1880
	SK1804 [6]	SK1803	VC1823	SK1802	VC1820	LF1880	PV1882	PV1881	PO1881	RF1880
	SK1804 [6]	SK1803	VC1823	SK1802	VC1820	LF1810	PV1882	PV1881	PO1881	RF1880
	SK1804 [6]	SK1803	VC1823	SK1802	VC1820	LF1810	PV1812	PV1811	PO1811	RF1810

[5] Reduced functional frame, only for fixed Tmax T and XT series breakers ≤T6

[6] With the reduced functional frame for fixed Tmax T and XT series circuit-breakers ≤ T6 or with standard functional frame for all the circuit-breakers.

To complete the structure

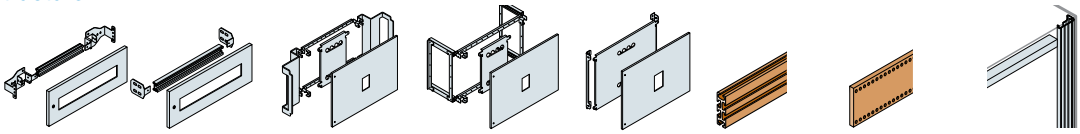

	DIN rail and panels	Tmax kits for ArTu reduced functional frame	Tmax kits for ArTu standard functional frame P≥225mm	Tmax kits for ArTu segregated functional frame	Distribution System		IP31/IP41 finishing section
					Busbars with shaped section	Flat busbars	
Switchgears without segregation	Page 5/16	Page 5/18	Page 5/20		Page 5/42	Page 5/46	Page 5/59
Segregated switchgears	Page 5/28			Page 5/30			

> Selection by components page 5/53 > In-depth technical information page 6/1 > Overall dimensions page 7/1

ArTu K Modular Structures
Selection of the structure

Rapid selection tables

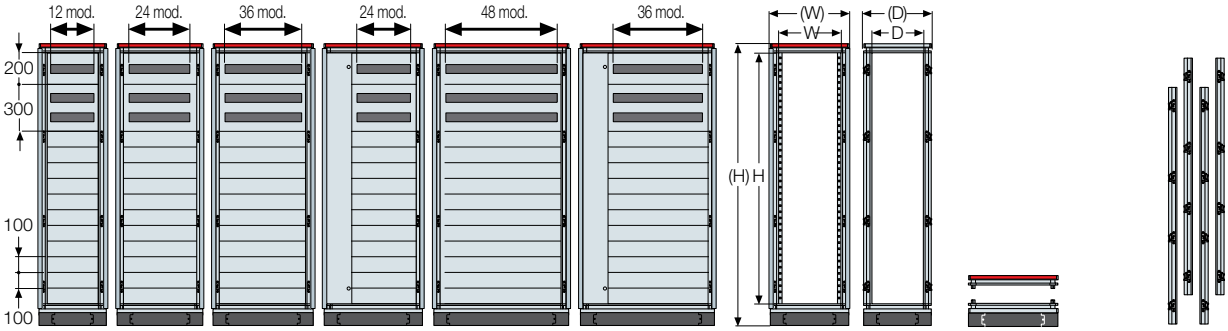

5

Structure hight 2000mm

No. mod. vert.mod H=100mm	No. DIN modules installable		External overall dimensions [1]			Functional dimensions [2]			Base Top Base strip	Side flangers base strip	Upright	
	DIN panel 150mm centre dist.	DIN panel 200mm centre dist.	(H) mm	(W) mm	(D) [3] mm	H mm	W mm	D [3] mm		To be ordered separately		
				538	362		390	225	SK4040	ZD1025		
				538	437		390	300	SK4050	ZD1030		
	156 (12x13)	120 (12x10)		538	637		390	500	SK4060	ZD1050		
				538	837		390	700	SK4080	ZD1070		
				538	1037		390	900	SK4010	ZD1090		
				748	287		600	150	SK6025	ZD1015		
				748	362		600	225	SK6040	ZD1025		
	312 (24x13)	240 (24x10)		748	437		600	300	SK6050	ZD1030		
				748	637		600	500	SK6060	ZD1050		
20			2231	748	837	2000	600	700	SK6080	ZD1070	SK2000	
				748	1037		600	900	SK6010	ZD1090		
				948	287		800	150	SK8025	ZD1015		
				948	362		800	225	SK8040	ZD1025		
	468 (36x13)	360 (36x10)		948	437		800	300	SK8050	ZD1030		
				948	637		800	500	SK8060	ZD1050		
				948	837		800	700	SK8080	ZD1070		
				948	1037		800	900	SK8010	ZD1090		
		480 (48x10)		1148	1037		1000	900	SK1010	ZD1090		

[1] The overall external dimensions of the ArTu K switchgear include the base strip h=100mm and the side panels, each 14mm wide.

[2] The functional dimensions represent the useful space for installing the apparatus.

[3] In this catalogue, reference is always made to the following depths: functional 150/225/300/500/700/900 mm external 287/362/437/637/837/1037 mm.

[4] The VC.... code is already complete with the functional frame, therefore it is not necessary to order other open or closed functional frames. Furthermore, the internal cable container is only built with 800/1000mm wide structures The rear intermediate upright SK1880 (H=1800mm) in switchgear without segregation must be ordered separately if necessary for fixing onto the back of crosspieces, accessories, busbars, etc

The positioning of two structures or a structure and a cable container side-by-side is realized by the AD1014 kit. When selecting the components, the characteristics of the apparatus to be mounted inside the switchgear must be taken into consideration, opting for the open frame and cable container when no form of segregation is required and, on the contrary, for the closed frame and cable container when forms of segregation from 2 to 4 are required. According to the type of covering selected, the degree of protection varies from IP31/41 (switchgear without front door) to IP65 (switchgear with front door and blind side panels).
The functional frames of ArTu K switchgear are available in two versions:
- switchgear without segregation (open frame) in cases where no form of segregation is required;
- segregated switchgear (closed frame) in cases where forms 2-3 and 4 segregation are required

> Selection by components page 5/53 > In-depth technical information page 6/1 > Overall dimensions page 7/1

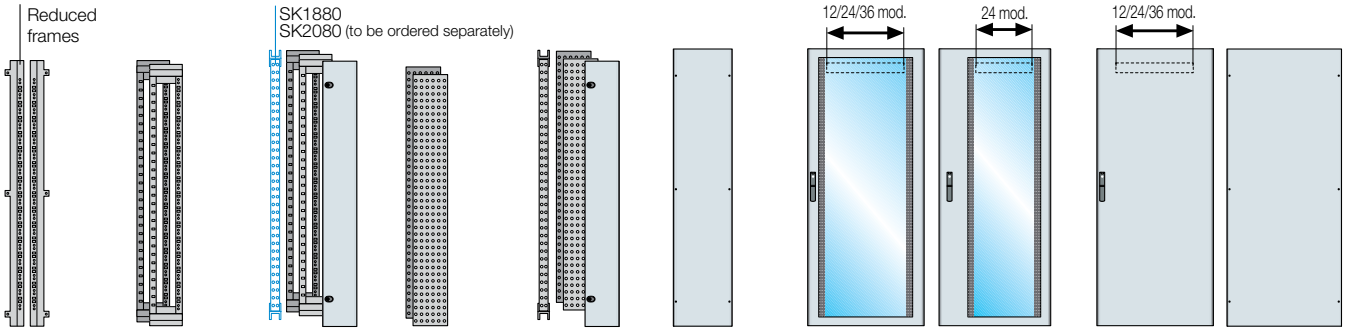

	Functional frames switchgear without segregation			Functional frames for segregated switchgear		Side coverings front and rear coverings IP65				
	Solution 1 Open frame	Solution 2 Open frame	Solution 3 [4] Internal cable container	Solution 1 Closed frame	Solution 2 [4] Internal cable container	Side panel	Glass door 12/24/36/48 mod.	Glass door 24/36 mod. + int. cable cont.	Blind door 12/24/36/48 mod.	Rear panel
	SK2004 [6]	SK2003	-	-	-	LF2040	PV2041	-	PO2041	RF2040
	SK2004 [6]	SK2003	-	-	-	LF2050	PV2041	-	PO2041	RF2040
	SK2004 [6]	SK2003	-	SK2002	-	LF2060	PV2041	-	PO2041	RF2040
	SK2004 [6]	SK2003	-	SK2002	-	LF2080	PV2041	-	PO2041	RF2040
	SK2004 [6]	SK2003	-	SK2002	-	LF2010	PV2041	-	PO2041	RF2040
	SK2004 [5]	-	-	-	-	LF2026	PV2061	-	PO2061	RF2060
	SK2004 [6]	SK2003	-	-	-	LF2040	PV2061	-	PO2061	RF2060
	SK2004 [6]	SK2003	-	-	-	LF2050	PV2061	-	PO2061	RF2060
	SK2004 [6]	SK2003	-	SK2002	-	LF2060	PV2061	-	PO2061	RF2060
	SK2004 [6]	SK2003	-	SK2002	-	LF2080	PV2061	-	PO2061	RF2060
	SK2004 [6]	SK2003	-	SK2002	-	LF2010	PV2061	-	PO2061	RF2060
	SK2004 [5]	-	VC2024	-	-	LF2026	PV2082	PV2081	PO2081	RF2080
	SK2004 [6]	SK2003	VC2024	-	-	LF2040	PV2082	PV2081	PO2081	RF2080
	SK2004 [6]	SK2003	VC2024	-	-	LF2050	PV2082	PV2081	PO2081	RF2080
	SK2004 [6]	SK2003	VC2023	SK2002	VC2020	LF2060	PV2082	PV2081	PO2081	RF2080
	SK2004 [6]	SK2003	VC2023	SK2002	VC2020	LF2080	PV2082	PV2081	PO2081	RF2080
	SK2004 [6]	SK2003	VC2023	SK2002	VC2020	LF2010	PV2082	PV2081	PO2081	RF2080
	SK2004 [6]	SK2003	VC2023	SK2002	VC2020	LF2010	PV2012	PV2011	PO2011	RF2010

[5] Reduced functional frame, only for fixed Tmax T and XT series breakers ≤T6

[6] With the reduced functional frame for fixed Tmax T and XT series circuit-breakers ≤ T6 or with standard functional frame for all the circuit-breakers.

To complete the structure

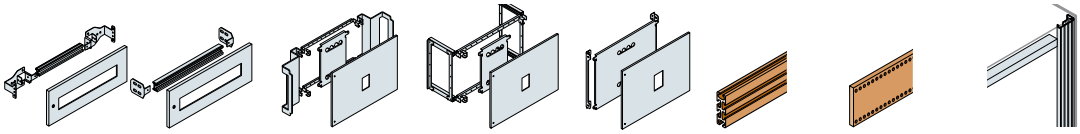

	DIN rail and panels	Tmax kits for ArTu reduced functional frame	Tmax kits for ArTu standard functional frame P≥225mm	Tmax kits for ArTu segregated functional frame	Distribution System		IP31/IP41 finishing section
					Busbars with shaped section	Flat busbars	
Switchgears without segregation	Page 5/16	Page 5/18	Page 5/20		Page 5/42	Page 5/46	Page 5/59
Segregated switchgears	Page 5/28			Page 5/30			

> Selection by components page 5/53 > In-depth technical information page 6/1 > Overall dimensions page 7/1

ArTu K Modular Structures
Selection of the structure

Rapid selection tables

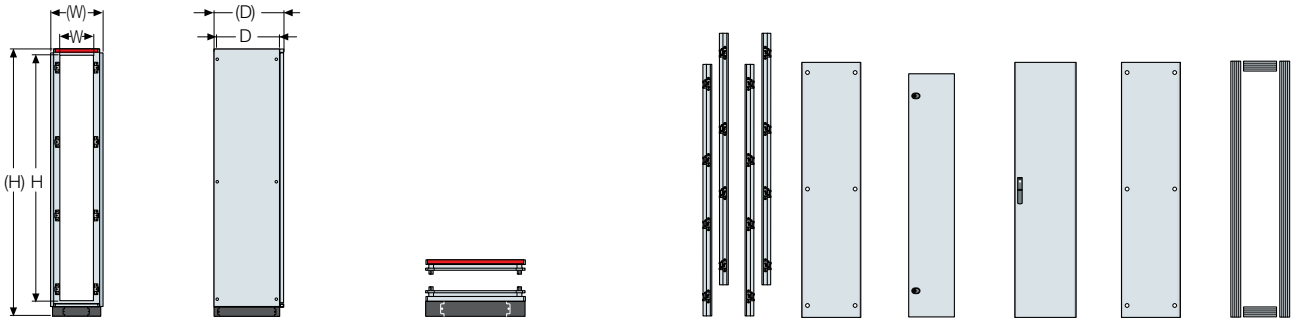

5

Additional cable container

Overall external dimensions [1]			Functional dimensions [2]			Base/Top Base strip	Side flanges for base strip	Uprights	Side covers, front and rear covers				
(H) mm	(W) mm	(D) [3] mm	H mm	W mm	D [3] mm		Ordered separately		Blind side door IP65	Internal front door IP31	External front door IP65	Rear panel IP65	Finishing section IP31/41
1831	448	287	1600	300	150	VC3025	ZD1015	SK1600	LF1626	P01631	P01633	RF1630	
2031	448	287	1800	300	150	VC3025	ZD1015	SK1800	LF1826	P01831	P01833	RF1830	See page 5/59
		362			225	VC3040	ZD1025		LF1840				
		437			300	VC3050	ZD1030		LF1850				
		637			500	VC3060	ZD1050		LF1860				
		837			700	VC3080	ZD1070		LF1880				
		1037			900	VC3010	ZD1090		LF1810				
2231	448	287	2000	300	150	VC3025	ZD1015	SK2000	LF2026	P02031	P02033	RF2030	
		362			225	VC3040	ZD1025		LF2040				
		437			300	VC3050	ZD1030		LF2050				
		637			500	VC3060	ZD1050		LF2060				
		837			700	VC3080	ZD1070		LF2080				
		1037			900	VC3010	ZD1090		LF2010				

[1] The overall external dimensions of the ArTu K switchgear include the base strip h=100mm and the side panels, each 14mm wide.

[2] The functional dimensions represent the useful space for installing the apparatus.

[3] In this catalogue, reference is always made to depths 287/362/437/637/837/1037mm corresponding to overall external dimensions 150/225/300 500/700/900mm.

Additional structure 300mm wide are available, which can be used as cable containers placed side by side laterally with all the ArTu K switchgear. In the same way as the structures, the additional cable container is made up of a base, top, base strip and uprights and is fixed to the structures using the side-byside kits (AD1014). It is completed with the side panels and the doors (to be ordered separately). The external doors are used on the additional cable container to be placed side by side with an ArTu structure with door (IP65); the internal doors are used on the additional cable container placed side by side with an ArTu IP31 version structure (i.e. without door and with finishing sections). This ensures uniformity of appearance between the structure and additional cable container. Furthermore, the internal doors can be used as internal segregations of the cable container: should a segregation with door open of the additional cable container be requested, it is possible to mount both the internal and external door at the same time.

> Selection by components page 5/53 > In-depth technical information page 6/1 > Overall dimensions page 7/1

Rapid selection tables

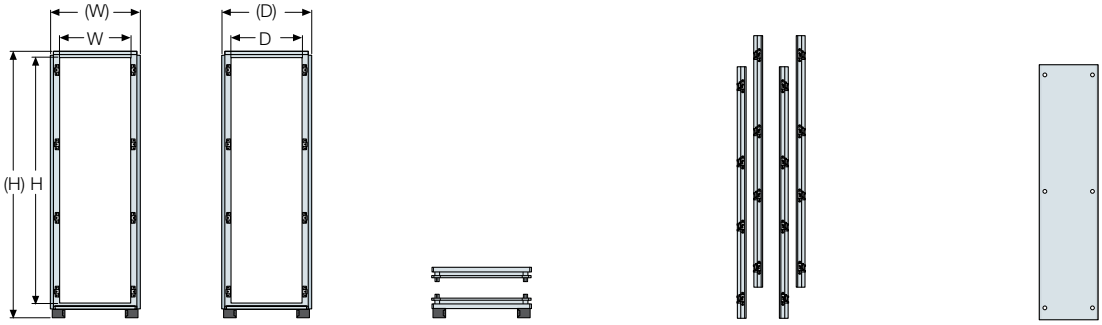

Angle square

Overall external dimensions [1]			Functional dimensions [2]			Base/Top/ Base strip	Uprights	Side covers
(H) mm	(W) mm	(D) [3] mm	H mm	W mm	D [3] mm			Blind side panel IP65
	637	637		500	500	SK6600		LF1860
2031	837	837	1800	700	700	SK8800	SK1815	LF1880
	1037	1037		900	900	SK1100		LF1810
	637	637		500	500	SK6600		LF2060
2231	837	837	2000	700	700	SK8800	SK2015	LF2080
	1037	1037		900	900	SK1100		LF2010

[1] The overall external dimensions of the ArTu K switchgear include the base strip h=100mm.

[2] The functional dimensions represent the useful space for installing the apparatus.

[3] In this catalogue reference isalways made to the following depth: functional 500/700mm external 637/837mm.

Example of use

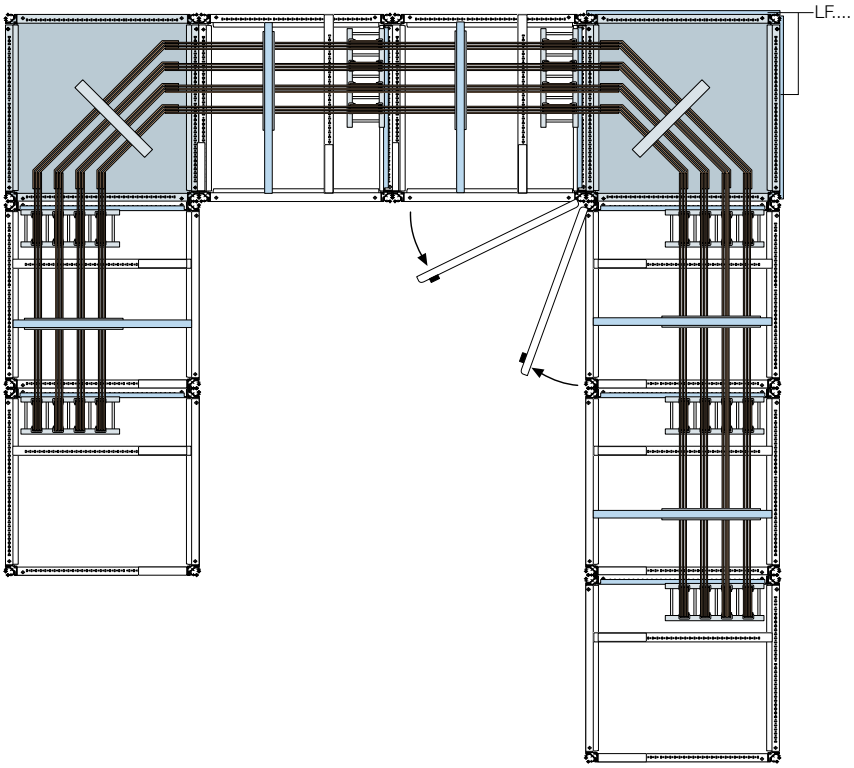

To avoid problem in opening the switchgear, please do not mount the doors with the handles close together

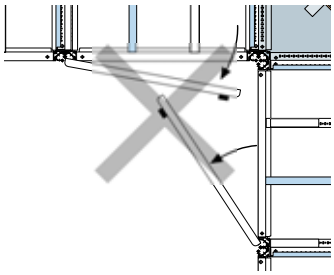

> Selection by components page 5/53 > In-depth technical information page 6/1 > Overall dimensions page 7/1

ArTu K Modular Structures
Selection of the structure

Solutions recommended for installation of the apparatus

Moulded-case circuit-breakers Tmax T series			Type of structure/installation																	
			Switchgear without segregation												Segregated switchgear					
			D=150mm		D=225mm		D=300mm		D=500mm		D=700mm		D=900mm		D=500mm		D=700mm		D=900mm	
			Horiz.	Vertic.	Horiz.	Vertic.	Horiz.	Vertic.	Horiz.	Vertic.	Horiz.	Vertic.	Horiz.	Vertic.	Horiz.	Vertic.	Horiz.	Vertic.	Horiz.	Vertic.
System Pro M modular apparatus				■		■		■		■		■		■		■		■		■
Tmax T1	front terminals	fixed	■	■	■	■	■	■	■	■	■	■	■	■						
		fixed+mod.diff	■	■	■	■	■	■	■	■	■	■	■	■						
	rear terminals	fixed			■	■	■	■	■	■	■	■	■	■	■		■		■	
Tmax T2	front terminals	fixed	■	■	■	■	■	■	■	■	■	■	■	■						
		plug-in			■		■		■		■		■							
		fixed+diff. mod.	■	■	■	■	■	■	■	■	■	■	■	■						
	rear terminals	fixed			■	■	■	■	■	■	■	■	■	■	■		■		■	
		plug-in			■		■		■		■		■		■		■		■	
Tmax T3	front terminals	fixed	■	■	■	■	■	■	■	■	■	■	■	■						
		plug-in			■	■	■	■	■	■	■	■	■	■						
		fixed+diff. mod.	■	■	■	■	■	■	■	■	■		■							
	rear terminals	fixed					■	■	■	■	■	■	■	■	■		■		■	
		plug-in					■	■	■	■	■	■	■	■	■		■		■	
		fixed+diff. mod.					■		■		■		■							
Tmax T4	front terminals	fixed	■	■	■	■	■	■	■	■	■	■	■	■						
		plug-in			■	■	■	■	■	■	■	■	■	■						
		withdrawable			■	■	■	■	■	■	■	■	■	■						
		fixed+diff. mod.	■	■	■	■	■	■	■	■	■	■	■	■						
	rear terminals	fixed					■	■	■	■	■	■	■	■	■	■	■	■	■	■
		plug-in					■	■	■	■	■	■	■	■	■	■	■	■	■	■
		withdrawable					■	■	■	■	■	■	■	■	■	■	■	■	■	■
		fixed+diff. mod.					■	■	■	■	■	■	■	■	■	■	■	■	■	■
Tmax T5	front terminals	fixed	■	■	■	■	■	■	■	■	■	■	■	■						
		plug-in			■	■	■	■	■	■	■	■	■	■						
		withdrawable			■	■	■	■	■	■	■	■	■	■						
	rear terminals	fixed					■	■	■	■	■	■	■	■	■	■	■	■	■	■
		plug-in					■	■	■	■	■	■	■	■	■	■	■	■	■	■
		withdrawable					■	■	■	■	■	■	■	■	■	■	■	■	■	■
Tmax T6	front terminals	fixed	■	■	■	■	■	■	■	■	■	■	■	■						
		withdrawable					■	■	■	■	■	■	■	■						
	rear terminals	fixed					■	■	■	■	■	■	■	■	■	■	■	■	■	■
		withdrawable					■	■	■	■	■	■	■	■	■	■	■	■	■	■
Tmax T7	front terminals	fixed					■	■	■	■	■	■	■	■						
		withdrawable							■	■	■	■	■	■						
	rear terminals	fixed							■	■	■	■	■	■	■	■	■	■	■	■
		withdrawable									■	■	■	■			■	■	■	■
Tmax T8	front terminals	fixed								■		■		■		■		■		■
	rear terminals	fixed								■		■		■		■		■		■

> Selection by components page 5/53 > In-depth technical information page 6/1 > Overall dimensions page 7/1

Solutions recommended for installation of the apparatus

Moulded-case circuit-breakers Tmax XT series			Type of structure/installation																	
			Switchgear without segregation												Segregated switchgear					
			D=150mm		D=225mm		D=300mm		D=500mm		D=700mm		D=900mm		D=500mm		D=700mm		D=900mm	
			Horiz.	Vertic.	Horiz.	Vertic.	Horiz.	Vertic.	Horiz.	Vertic.	Horiz.	Vertic.	Horiz.	Vertic.	Horiz.	Vertic.	Horiz.	Vertic.	Horiz.	Vertic.
Tmax XT1	front terminals	fixed	■	■	■	■	■	■	■	■	■	■	■	■						
		fixed+diff. mod.	■	■	■	■	■	■	■	■	■	■	■	■						
	rear terminals	fixed			■	■	■	■	■	■	■	■	■	■	■	■	■	■	■	■
Tmax XT2	front terminals	fixed	■	■	■	■	■	■	■	■	■	■	■	■						
		plug-in			■		■		■		■		■		■		■		■	
	rear terminals	fixed			■		■		■		■		■		■		■		■	
		plug-in			■		■		■		■		■		■		■		■	
Tmax XT3	front terminals	fixed	■	■	■	■	■	■	■	■	■	■	■	■						
		fixed+diff. mod.	■	■	■	■	■	■	■	■	■	■	■	■						
	rear terminals	fixed			■	■	■	■	■	■	■	■	■	■	■		■		■	
		plug-in			■		■		■		■		■		■		■		■	
Tmax XT4	front terminals	fixed	■	■	■	■	■	■	■	■	■	■	■	■						
		fixed+diff. mod.	■	■	■	■	■	■	■	■	■	■	■	■						
	rear terminals	fixed			■	■	■	■	■	■	■	■	■	■	■	■	■	■	■	■
		plug-in			■		■		■		■		■		■		■		■	
		withdrawable			■		■		■		■		■		■		■		■	

Air circuit-breakers Emax series			Type of structure/installation																	
			Switchgear without segregation												Segregated switchgear					
			D=150mm		D=225mm		D=300mm		D=500mm		D=700mm		D=900mm		D=500mm		D=700mm		D=900mm	
			Horiz.	Vertic.	Horiz.	Vertic.	Horiz.	Vertic.	Horiz.	Vertic.	Horiz.	Vertic.	Horiz.	Vertic.	Horiz.	Vertic.	Horiz.	Vertic.	Horiz.	Vertic.
Emax X1	front terminals	fixed					■	■	■	■	■	■	■	■						
		withdrawable							■	■	■	■	■	■						
Emax E1-E2-E3	rear terminals	fixed										■		■				■		■
		withdrawable										■		■				■		■
Emax E4	rear terminals	fixed												■						■
		withdrawable												■						■
		fixed full size												■						■
		withdrawable full size												■						■
Emax E6	rear terminals	fixed												■						■
		withdrawable												■						■

Note: A 1600 A busbar system can only be installed in a D=300 mm structure in conjunction with the small-size frame.
A standard frame must be used in the column with a 1600 A main circuit-breaker.

> Selection by components page 5/53 > In-depth technical information page 6/1 > Overall dimensions page 7/1

ArTu K Modular Structures
Selection of the structure

Solutions recommended for installation of equipped apparatus

Tmax moulded-case circuit-breakers interlocked, interlocked motor operated			Type of structure/installation															
			Switchgear without segregation										Switchgear without segregation					
			D=225mm		D=300mm		D=500mm		D=700mm		D=900mm		D=500mm		D=700mm		D=900mm	
			Horiz.	Vertic.	Horiz.	Vertic.	Horiz.	Vertic.	Horiz.	Vertic.	Horiz.	Vertic.	Horiz.	Vertic.	Horiz.	Vertic.	Horiz.	Vertic.
Tmax T1	front terminal	fixed	■		■		■		■		■							
Tmax T2	front terminal	fixed	■		■		■		■		■							
	rear terminal	fixed	■		■		■		■		■							
Tmax T3	front terminal	fixed	■		■		■		■		■							
		plug-in	■		■		■		■		■							
	rear terminal	fixed			■		■		■		■		■		■		■	
		plug-in			■		■		■		■		■		■		■	
Tmax T4	front terminal	fixed	■	■	■		■		■		■							
		plug-in	■		■		■		■		■							
		withdrawable	■	■	■		■		■		■							
	rear terminal	fixed			■		■		■		■		■		■		■	
		plug-in			■		■		■		■		■		■		■	
		withdrawable			■		■		■		■		■		■		■	
Tmax T5	front terminal	fixed	■	■	■	■	■	■	■	■	■	■						
		plug-in	■	■	■	■	■	■	■	■	■	■						
		withdrawable	■	■	■	■	■	■	■	■	■	■						
	rear terminal	fixed			■	■	■	■	■	■	■	■	■	■	■	■	■	■
		plug-in			■	■	■	■	■	■	■	■	■	■	■	■	■	■
		withdrawable			■	■	■	■	■	■	■	■	■	■	■	■	■	■
Tmax T6	front terminal	fixed	■	■	■	■	■	■	■	■	■	■						
		withdrawable			■	■	■	■	■	■	■	■						
	rear terminal	fixed			■	■	■	■	■	■	■	■	■	■	■	■	■	■
		withdrawable			■	■	■	■	■	■	■	■			■	■	■	■
Tmax T7	front terminal	fixed				■		■		■		■						
		withdrawable								■		■						
	rear terminal	fixed			■	■	■	■	■	■	■	■			■	■	■	■
		withdrawable								■		■			■	■	■	■
Tmax XT1	front terminal	fixed	■		■		■		■		■							
	rear terminal	fixed			■		■		■		■							
Tmax XT2	front terminal	fixed	■		■		■		■		■							
	rear terminal	fixed			■		■		■		■		■		■		■	
Tmax XT3	front terminal	fixed	■		■		■		■		■							
	rear terminal	fixed			■		■		■		■		■		■		■	

> Selection by components page 5/53 > In-depth technical information page 6/1 > Overall dimensions page 7/1

Solutions recommended for installation of equipped apparatus

Tmax moulded-case circuit-breakers interlocked, interlocked motor operated			Type of structure/installation															
			Switchgear without segregation										Switchgear without segregation					
			D=225mm		D=300mm		D=500mm		D=700mm		D=900mm		D=500mm		D=700mm		D=900mm	
			Horiz.	Vertic.	Horiz.	Vertic.	Horiz.	Vertic.	Horiz.	Vertic.	Horiz.	Vertic.	Horiz.	Vertic.	Horiz.	Vertic.	Horiz.	Vertic.
Tmax T3	front terminal	fixed		■		■		■		■		■						
		plug-in		■		■		■		■		■						
		withdrawable		■		■		■		■		■						
	rear terminal	fixed				■		■		■		■	■		■		■	
		plug-in				■		■		■		■	■		■		■	
Tmax T4	front terminal	fixed				■		■		■		■						
		plug-in				■		■		■		■						
	rear terminal	fixed				■		■		■		■	■		■		■	
		plug-in				■		■		■		■	■		■		■	
Tmax T5	front terminal	fixed				■		■		■		■						
		plug-in				■		■		■		■						
		withdrawable				■		■		■		■						
	rear terminal	fixed				■		■		■		■	■	■	■	■	■	■
		plug-in				■		■		■		■	■	■	■	■	■	■
		withdrawable				■		■		■		■	■	■	■	■	■	■
Tmax T6	front terminal	fixed			■		■		■		■							
		withdrawable			■		■		■		■							
	rear terminal	fixed			■		■		■		■				■		■	
		withdrawable							■		■				■		■	
Tmax T7	front terminal	withdrawable							■		■							
	rear terminal	fixed					■		■		■				■		■	
		withdrawable							■		■				■		■	
Tmax XT1	front terminal	fixed	■		■		■		■		■							
		plug-in			■		■		■		■							
	rear terminal	fixed	■		■		■		■		■		■		■		■	
		plug-in					■		■		■							
Tmax XT3	front terminal	fixed	■		■		■		■		■							
		plug-in			■		■		■		■							
	rear terminal	fixed	■		■		■		■		■		■		■		■	
		plug-in					■		■		■							
Tmax XT4	front terminal	fixed	■		■		■		■		■							
		plug-in			■		■		■		■							
	rear terminal	fixed	■		■		■		■		■		■		■		■	
		plug-in					■		■		■							

Note: A 1600 A busbar system can only be installed in a D=300 mm structure in conjunction with the small-size frame.
A standard frame must be used in the column with a 1600 A main circuit-breaker.

> Selection by components page 5/53 > In-depth technical information page 6/1 > Overall dimensions page 7/1

ArTu K Modular Structures
Selection of the structure

System Pro M modular apparatus Tmax T1-T2-T3-XT1-XT3 moulded-case circuit-breakers, OT≤160 A and Unifix H supports

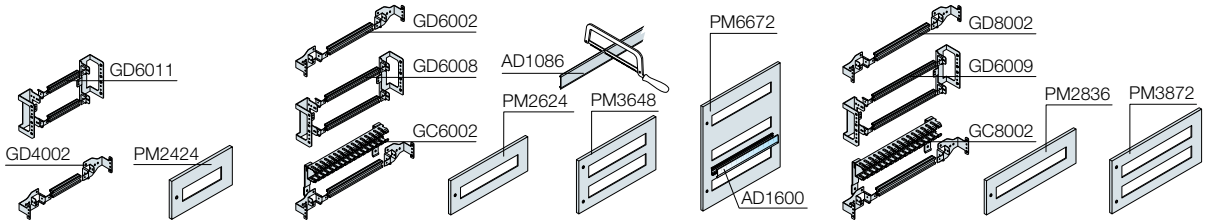

	W=390mm		W=600mm				W=800mm			W=1000mm	
H (mm)	DIN rail kit 12 DIN mod.	Panel 1 DIN row 12 DIN mod.	DIN rail kit 24 DIN mod.	Panel 1 DIN row 24 DIN mod.	Panel 2 DIN rows 48 DIN mod.	Panel 3 DIN rows 72 DIN mod.	DIN rail kit 36 DIN mod.	Panel 1 DIN row 36 DIN mod.	Panel 2 DIN rows 72 DIN mod.	DIN rail kit 48 DIN mod.	Panel 1 DIN row 48 DIN mod.
Standard version in aluminum											
200	GD4002	PM2424	GD6002	PM2624			GD8002	PM2836		GD1000	PM2010
300 (1)			GD6002	PM2312			GD8002	PM2315			
300 (2)	GD6002	PM3424	GD6008		PM3648				PM3872		
600			3x GD6002			PM6672					
Equipped versions (complete with wiring duct 60x80 and AD1037 supports)											
200			GC6002	PM2624			GD8002	PM2836			
Reinforced version for Tmax and Tmax RC 222/1 residual current mod. 200mmm											
200			GD6010(2)	PM2624			GD8010	PM2836			
Reinforced version for Tmax (2) and Tmax RC 222/1											
300 (1)			GD6010(2)	PM2312			GD8010	PM2315			
Unifix H fixing brackets											
300			AD1061	PM3624			AD1061	PM3836			

(1) Version for Tmax with differential module underplaced RC 221/222.

(2) Only for System Pro *M* modular apparatus.

Completion items for installation on DIN rail

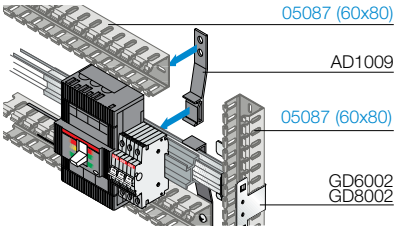

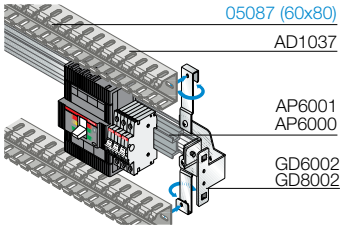

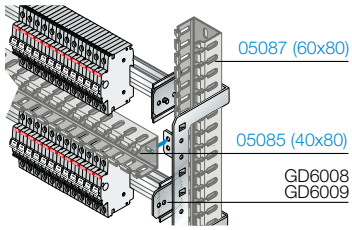

Supports for horizontal wiring duct

Allows assembly of the cabling wiring duct horizontally up to 60x80mm. The AD1009 plastic model can be positioned on the rear of the DIN rail, whereas the AD1037 metal version is fixed onto the brackets of DIN rail GD6002/ GD8002, and allows adjustment of the wiring duct depth.

Code	Description
AD1009	Horizontal wiring duct (plastic) supports
AD1037	Horizontal wiring duct (metal) supports

Depth adapter

Code	Description
AP6000	No.1 depth adapter for Tmax T1-T2-T3-XT1-XT3 W=600mm floor-standing

Polished flange for Tmax XT2-XT4 positioned side by side on plate

Code	Description
AD3310	AD3310 Polished flange for plate-mounted XT2 3P
AD3311	AD3311 Polished flange for plate-mounted XT2 4P
AD3312	AD3312 Polished flange for plate-mounted XT4 3P
AD3313	AD3313 Polished flange for plate-mounted XT4 4P

Tmax XT2-XT4 on DIN rail cannot be mounted in ArTu switchboards.

DIN window hole covers

Code	Description
AD1086	DIN L=2000mm hole cover strip - grey RAL 7035
AD1088	DIN 24 modules hole cover strip - grey RAL 7035
AD1089	DIN 36 modules hole cover strip - grey RAL 7035

> Selection by components page 5/53 > In-depth technical information page 6/1 > Overall dimensions page 7/1

STRUCTURES WITHOUT SEGREGATION - Kit for switchgear with reduced frames
Horizontal installation

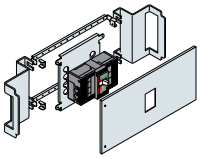

Circuit-breaker front terminals	No. poles	Dimensions H (mm)	Fixed		Fixed + RC mod. underneath	
			24 DIN mod. W=600mm	36 DIN mod. W=800mm	24 DIN mod. W=600mm	36 DIN mod. W=800mm
Tmax T1	3-4	200	KT1117			
Tmax T1	4	200			KT1102 [1]	
Tmax T2	3-4	200	KT2117			
Tmax T2	4	200			KT2102	KL2103
Tmax T3	3-4	200	KT3112	KL3113		
Tmax T3	4	300			KT3102	KL3103
Tmax T4	3-4	200	KT4112	KL4115		
Tmax T4	4	200			KT4110	KL4116
Tmax T5	3-4	300	KT5112	KL5114		
Tmax T5	4	300			KT5110	KL5116
Tmax T6	3-4	500	KT6113	KL6113		
Tmax XT1	3[2]/4	200	KX1617			
Tmax XT1	4	200			KX1602	
Tmax XT2	3[2]/4	200	KX2619			
Tmax XT2	4	200			KX2602	
Tmax XT3	3[2]/4	200	KX3612	KL3613		
Tmax XT3	4	300			KX3602	KX3603
Tmax XT4	3[2]/4	200	KX4612	KX4615		
Tmax XT4	4	200			KX4610	

Hole covering strip L =200mm AD1086, 24 DIN ,od. AD1088, 36 DIN mod. AD1089, RAL 7035 color.

[1] Version for Tmax with differential module underplaced RC 221/222.

[2] For 3 poles breakers please order accessory flange Code: AD3305 XT1 3P Flange for plate-mounting - AD3306 XT2 3P Flange for plate-mounting - AD3307 XT3 3P Flange for plate-mounting - AD3308 XT4 3P Flange for plate-mounting.

> Selection by components page 5/53 > In-depth technical information page 6/1 > Overall dimensions page 7/1

STRUCTURES WITHOUT SEGREGATION - Kit for switchgear with reduced frames
Vertical installation

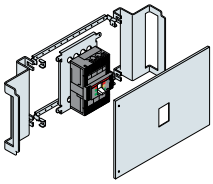

Circuit-breaker front terminals	No. poles	Dimensions H (mm)	Fixed 24 DIN mod. W=600mm	Fixed 36 DIN mod. W=800mm	Fixed + RC mod. underneath 24 DIN mod. W=600mm	Fixed + RC mod. underneath 36 DIN mod. W=800mm
Tmax T1-T2-T3-XT1-XT3 on DIN rail 35		200	(see page 5/16)			
Tmax T3	3-4	300	KT3212			
Tmax T4	3-4	400	KT4212			
Tmax T4	4	500			KT4102	
Tmax T5	3-4	400	KT5212	KL5212		
Tmax T5	4	500			KT5102	KL5102
Tmax T6	3-4	500	KT6213	KL6213		
Tmax XT1	3[1]-4	200	KX1618			
Tmax XT1	4	300			KX1603	
Tmax XT1 N 3 CBs side by side	3[1]-4	200	KX1604			
Tmax XT2 N 3/4[2] CBs side by side	3-4[3]	200	KX2604			
Tmax XT3	3[1]-4	300	KX3614			
Tmax XT3	4	300			KX3609	
Tmax XT4	3[1]-4	300	KX4614			
Tmax XT4	4	400			KX4602	
Tmax XT4 N 3/4[3] CBs side by side	3-4[3]	300	KX4604			

Hole covering strip L =200mm AD1086, 24 DIN ,od. AD1088, 36 DIN mod. AD1089, RAL 7035 color.

[1] For 3 poles breakers please order accessory flange Code: AD3305 XT1 3P Flange for plate-mounting - AD3306 XT2 3P Flange for plate-mounting - AD3307 XT3 3P Flange for plate-mounting - AD3308 XT4 3P Flange for plate-mounting.

[2] No. 4 CBs side by side 3P, No. 3 CBs side by side 4P.

[3] Order AD3310, AD3311, AD3312, AD3313 polished flange, see page 5/107.

Kit for OT160÷400

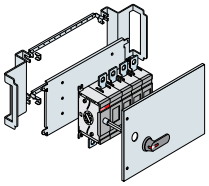

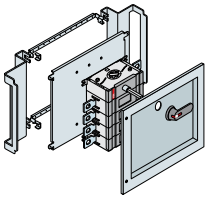

Description	Code	Dimensions (mm) H	Dimensions (mm) W	Poles	Control	Maximum length handle	Minimum length shaft
Kit OT160/200/250/315/400 vertical	KO2260	300	600	E03-04	Lateral	80mm (Ø6)-125mm (Ø12)	130mm (Ø6)-166mm (Ø12)
Kit OT160/200/250/315/400 horizontal	KO2261	300	600	E03-04	Lateral	80mm (Ø6)-125mm (Ø12)	130mm (Ø6)-166mm (Ø12)
Kit OT160/200/250/315/400 vertical	KO2280	400	600	E03-04	Lateral	80mm (Ø6)-125mm (Ø12)	130mm (Ø6)-166mm (Ø12)
Kit OT160/200/250/315/400 horizontal	KO2281	600	600	E03-04	Lateral	80mm (Ø6)-125mm (Ø12)	130mm (Ø6)-166mm (Ø12)

Apparatus of the OETL series up to 400A and OESA up to 160 A (in both cases not motor operated) can be installed inside the floor-mounted ArTu K switchgear. According to the dimensions of the apparatus, a plain back plate must be used (PF or FR…) and a panel (PC or PR…) of appropriate height and depth must be used. The useful space between panel and door is 50mm. For larger-sized handles, use plain recessed panels PR… (see dimensions in table).

> Selection by components page 5/53 > In-depth technical information page 6/1 > Overall dimensions page 7/1

STRUCTURES WITHOUT SEGREGATION - Kit for switchgear with reduced frames

Plain back plates, plain and ventilated panels

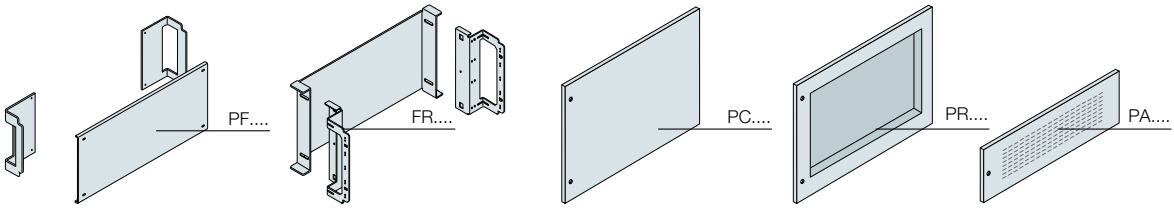

	Back plates				Panels				
	Plain flat		Plain recessed		Plain flat		Plain recessed		Ventilated
H (mm)	24 DIN mod. W=600mm	36 DIN mod. W=800mm	24 DIN mod. W=600mm	36 DIN mod. W=800mm	24 DIN mod. W=600mm	36 DIN mod. W=800mm	24 DIN mod. W=600mm	36 DIN mod. W=800mm	24 DIN mod. W=600mm
100					PC1600	PC1800			PA1600
200	PF2610	PF2810	FR2601	FR2801	PC2600	PC2800	PR2600	PR2800	PA2600
300					PC3600	PC3800			
400	PF4610	PF4810	FR4601	FR4801	PC4600	PC4800	PR4600	PR4800	
600					PC6600	PC6800	PR6600	PR6800	
800					PC8600	PC8800			
1600					PC1660	PC1680			
1800					PC1860	PC1880			
2000					PC2060	PC2080			

Can be used to mount all the non-modular apparatus.

5

Useful internal space

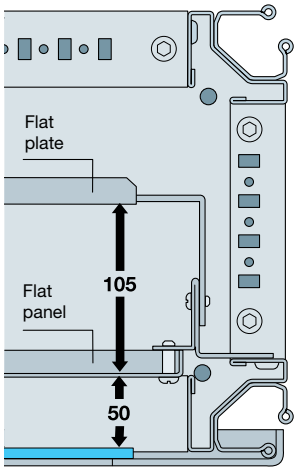

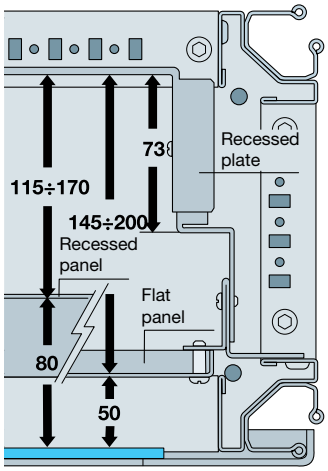

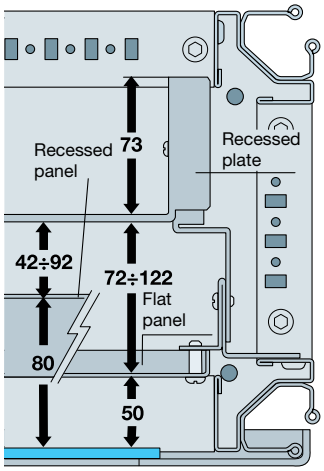

Minimum distance between back plate and busbar holder

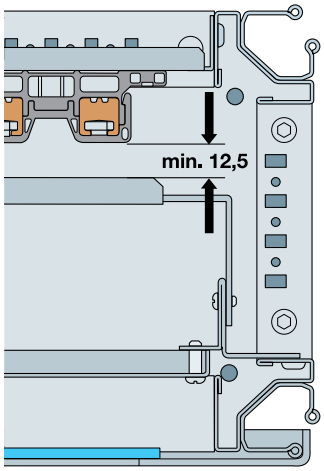

> Selection by components page 5/53 > In-depth technical information page 6/1 > Overall dimensions page 7/1

STRUCTURES WITHOUT SEGREGATION - Kit for switchgear with standard frames D≥225mm

Horizontal installation

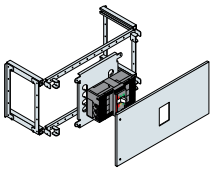

Front or rear CB terminals	No. poles	Dimensions H (mm)	Fixed			Fixed + RCD mod. underneath			Plug-in		Withdrawable
			12 DIN mod. W=390mm	24 DIN mod. W=600mm	36 DIN mod. W=800mm	12 mod. DIN W=390mm	24 mod. DIN W=600mm	36 mod. DIN W=800mm	12 mod. DIN W=390mm	24 mod. DIN W=600mm	24 mod. DIN W=600mm
Tmax T1	3-4	200	KT1411	KT1111							
Tmax T1	4	200				KT1401(1)	KT1101(1)	KL1102(1)			
Tmax T2	3-4	200	KT2411	KT2111					KT2421	KT2121	
Tmax T2	4	200 (*)				KT2401	KT2101	KL2104			
Tmax T3	3-4	200	KT3419	KT3119	KL3114				KT3421	KT3121	
Tmax T3	4	300 (*)				KT3401	KT3101	KL3104			
Tmax T4	3-4	200	KT4411	KT4111						KT4122	
Tmax T4	3-4	300									KT4127
Tmax T4	4	200					KT4101				
Tmax T5 (400A)	3-4	300	KT5411	KT5111	KL5115					KT5120	KT5130
Tmax T5 (630A)	3-4	300	KT5411	KT5111	KL5115					KT5121	KT5131
Tmax T5	4	300					KT5101	KL5101			
Tmax T6	3-4	500		KT6111							KT6131
Tmax T7-Emax X1	3-4	400	KT7110(**)	KT7111	KL7112						
	3-4	500									KT7560
Tmax XT1	3(2)/4	200	KX1419	KX1611						KX1621	
Tmax XT1	4	200 (*)				KX1401(*)	KX1609	KX1801			
Tmax XT2	3(2)/4	200	KX2411	KX2611						KX2621	
Tmax XT2	3(2)/4	300									KX2631
Tmax XT2	4	200 (*)					KX2601	KX2801			
Tmax XT2	4	300									KX2634(3)
Tmax XT3	3(2)/4	200	KX3411	KX3611	KX3811					KX3621	
Tmax XT3	4	300 (*)					KX3601	KX3801			
Tmax XT4	3(2)/4	200	KX4411	KX4611						KX4622	
Tmax XT4	3(2)/4	300									KX4627
Tmax XT4	4	300									KX4633(3)
Tmax XT4	4	200 (*)					KX4601				

(*) Only front terminals,

(**) Only rear terminals,

(1) Version for Tmax with differential module underplaced RC 221/222.

(2) For 3 poles breakers please order accessory flange Code: AD3305 XT1 3P Flange for plate-mounting - AD3306 XT2 3P Flange for platemounting - AD3307 XT3 3P Flange for plate-mounting - AD3308 XT4 3P Flange for plate-mounting.

(3) Withdrawable + RC.mod. underneath.

> Selection by components page 5/53 > In-depth technical information page 6/1 > Overall dimensions page 7/1

STRUCTURES WITHOUT SEGREGATION - Kit for switchgear with standard frames D≥225mm

Vertical installation

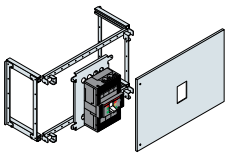

Front or rear CB terminals	No. poles	Dimensions H (mm)	Fixed			Fixed + RCD mod. underneath			Plug-in		Withdrawable
			12 DIN mod. W=390mm	24 DIN mod. W=600mm	36 DIN mod. W=800mm	12 mod. DIN W=390mm	24 mod. DIN W=600mm	36 mod. DIN W=800mm	12 mod. DIN W=390mm	24 mod. DIN W=600mm	24 mod. DIN W=600mm
Tmax T1-T2-T3-XT1-XT3 on DIN 35 rail		200	(see page 5/16)								
Tmax T3	3-4	300	KT3416	KT3211	KL3212						
Tmax T3	3-4	400							KT3426	KT3221	
Tmax T4	3-4	400	KT4412	KT4211						KT4221	KT4231
Tmax T4 side by side	3-4	400		KT4116[3]	KL4118[1]						
Tmax T4	4	500					KT4103				
Tmax T5 (400A)	3-4	400	KT5412	KT5211	KL5213					KT5222	KT5232
Tmax T5 (630A)	3-4	400	KT5412	KT5211	KL5213						
Tmax T5 side by side	3-4	400		KT5214[2]	KL5214[3]						
Tmax T5	3-4	500								KT5221	KT5231
Tmax T5	4	500				KT5401	KT5103	KL5103			
Tmax T5 side by side	3-4	500					KT5117[2]	KL5117[3]			
Tmax T6	3-4	500		KT6211	KL6214						KT6122
Tmax T6 side by side	3-4	500			KL6124[2]						
Tmax T7-EMAX X1	3-4	500		KT7211[4]	KL7212[4]						KT7231[4]
Tmax T8	3-4	900			KT8211						
Tmax XT2 side by side[6]	3-4[7]	200		KX2612							
Tmax XT3	3[5]/4	300	KX3412	KX3613	KX3812						
Tmax XT4	3[5]/4	300	KX4412	KX4617							
Tmax XT4	4	400					KX4603				
Tmax XT4 side by side	3[5]/4	300		KX4616[2]							
Tmax XT4 side by side	3[5]/4	300			KX4818[3]						

[1] Kit for No. 4 T4 circuit-breakers side by side,

[2] Kit for No. 2 circuit-breakers side by side,

[3] Kit for No. 3 circuit-breakers side by side,

[4] Order No.2 blind panels H=100mm (PC....) for breakers with front terminals.

[5] For 3 poles breakers please order accessory flange Code: AD3305 XT1 3P Flange for plate-mounting - AD3306 XT2 3P Flange for platemounting - AD3307 XT3 3P Flange for plate-mounting - AD3308 XT4 3P Flange for plate-mounting.

[6] No. 4 CBs side by side 3P, No. 3 CBs side by side 4P.

[7] Order AD3310, AD3311, AD3312, AD3313 polished flange, see page 5/107.

> Selection by components page 5/53 > In-depth technical information page 6/1 > Overall dimensions page 7/1

STRUCTURES WITHOUT SEGREGATION - Kit for switchgear with standard frames D≥225mm

Installation of equipped apparatus horizontally

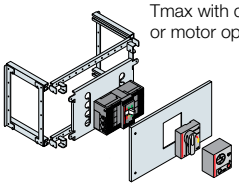

Tmax with direct rotary handle or motor operator

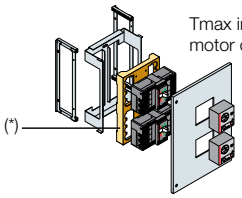

Tmax interlocked or interlocked motor operated

Front or rear circuit-breaker terminals	No. poles	Dimensions H (mm)	Fixed				Plug-in				Withdrawable			
			24 DIN mod. W=600mm				24 DIN mod. W=600mm				24 DIN mod. W=600mm			
			Direct rotary handle	Motor operator	Interlocked	Interlocked motor operated	Direct rotary handle	Motor operator	Interlocked	Interlocked motor operated	Direct rotary handle	Motor operator	Interlocked	Interlocked motor operated
Tmax T1	3-4	200	KT1112	KT1111										
Tmax T2	3-4	200	KT2112	KT2111										
Tmax T3	3-4	200	KT3114	KT3119			KT3116	KT3121						
Tmax T3	3-4	500(2)			KT3131	KT3131			KT3131					
Tmax T4	3-4	200	KT4111	KT4111										
Tmax T4	3-4	300									KT4127	KT4125		
Tmax T4	3-4	600(2)			KI4114	KI4114			KI4114	KI4114			KI4115	KI4115
Tmax T5 (400A)	3-4	300	KT5111	KT5111							KT5130	KT5134		
Tmax T5 (630A)	3-4	300	KT5111	KT5111							KT5131	KT5135		
Tmax T5	3-4	600(2)			KI5114	KI5114			KI5114	KI5114			KI5115	KI5115
Tmax T6	3-4	500	KT6112	KT6115							KT6131	KT6114		
Tmax T6	3-4	800(2)			KT6116	KT6117							KT6118	KT6119
Tmax T7** - Emax X1	3-4	400(1)	KT7111	KT7111	KT7111	KT7111								
Tmax XT1	3-4	200	KX1605	KX1607										
Tmax XT1	3-4	500			KX1622	KX1608			KX1622	KX1608				
Tmax XT2	3-4	200	KX2605	KX2607										
Tmax XT2	3-4	300									KX2632			
Tmax XT2	3-4	500			KX2622	KX2608			KX2622	KX2608				
Tmax XT3	3-4	200	KX3605	KX3607										
Tmax XT3+XT1	3(3)-4	500			KX1131	KX1132			KX1131	KX1132				
Tmax XT3	3(3)-4	500			KX3131	KX3132			KX3131	KX3132				
Tmax XT4	3(3)-4	200	KX4606	KX4607										
Tmax XT4	3-4	300									KX4632			
Tmax XT4	3(3)-4	500			KX4141	KX4142			KX4141	KX4142				

(*) Interlock plate to be ordered with the circuit-breakers.

(**) Kit for a single circuit-breaker.

(1) Kit for width 800mm KL7112.

(2) Use with rear connection.

(3) For 3 poles breakers please order accessory flange Code: AD3305 XT1 3P Flange for plate-mounting - AD3306 XT2 3P Flange for plate-mounting - AD3307 XT3 3P Flange for platemounting - AD3308 XT4 3P Flange for plate-mounting.

> Selection by components page 5/53 > In-depth technical information page 6/1 > Overall dimensions page 7/1

STRUCTURES WITHOUT SEGREGATION - Kit for switchgear with standard frames D≥225mm

Installation of equipped apparatus vertically

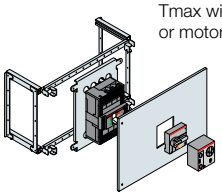

Tmax with direct rotary handle
or motor operator

Front or rear circuit-breaker terminals	No. poles	Dimensions H (mm)	Fixed				Plug-in				Withdrawable			
			24 DIN mod. W=600mm				24 DIN mod. W=600mm				24 DIN mod. W=600mm			
			Direct rotary handle	Motor operator	Interlocked	Interlocked motor operated	Direct rotary handle	Motor operator	Interlocked	Interlocked motor operated	Direct rotary handle	Motor operator	Interlocked	Interlocked motor operated
Tmax T4	3-4	400	KT4211	KT4211							KT4231	KT4126		
Tmax T5 (400A)	3-4	400	KT5211	KT5211							KT5232	KT5138		
Tmax T5 (630A)	3-4	400	KT5211	KT5211										
Tmax T5	3-4	500									KT5231	KT5139		
Tmax T6	3-4	500	KT6120	KT6121							KT6122	KT6123		
Tmax T7** - Emax X1	3-4	500		KT7211[1]	KT7211[1]	KT7211[1]						KT7231[2]	KT7231[2]	KT7231[2]
Tmax XT2/XT4	3-4	400			KX2412									

(*) Interlock plate to be ordered with the circuit-breakers.

(**) Kit for a single circuit-breaker.

[1] Kit for width 800mm KL7112.

[2] Kit for width 800mm KL7213.

> Selection by components page 5/53 > In-depth technical information page 6/1 > Overall dimensions page 7/1

STRUCTURES WITHOUT SEGREGATION - Kit for switchgear with standard frames D≥225mm

Installation of Emax circuit-breakers vertically

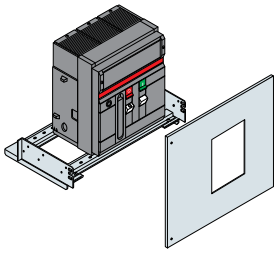

Emax circuit-breakers	No. poles	Dimensions H (mm)	Fixed 24 DIN mod. W=600mm	Fixed 36 DIN mod. W=800mm	Fixed 48 DIN mod. W=1000mm	Withdrawable 24 DIN mod. W=600mm	Withdrawable 36 DIN mod. W=800mm	Withdrawable 48 DIN mod. W=1000mm
Emax X1/T7 interlocked**	3-4	500	KT7211[1]	KL7212[1]		KT7231[1]	KL7213[1]	
Emax E1[1]-E2[1]-E3	3-4	600	KE3215			KE3235		
Emax E3/E3 interlocked**	3-4	600		KE4215			KE4235	
Emax E4/E4 interlocked**	3-4[2]	600		KE5215			KE5235	
Emax E4 Full size	4	600			KE4000			KE5237
Emax E6 50% Neutral	3/4	600			KE6342			KE6341

The kit for installing Emax air circuit-breakers in the versions of switchgear indicated includes the pre-drilled front panel and the resting crosspieces. To install Emax E1…E3 circuit-breakers, always use 700mm depth (therefore also depth 900mm with kit SK..81), for Emax E4 use structures with 900mm depth or several structures placed side by side at the rear It is necessary to install one E6 breaker per column (depth D=900 mm), at a maximum height of H=1100 mm; moreover, under the E6 breaker it is not possible to install any other device.

[1] This kit can also be used for motor operated, interlocked and interlocked motor operated version.

[2] For the 4P version neutral 50%

(**) Kit for a single circuit-breaker.

Useful internal space

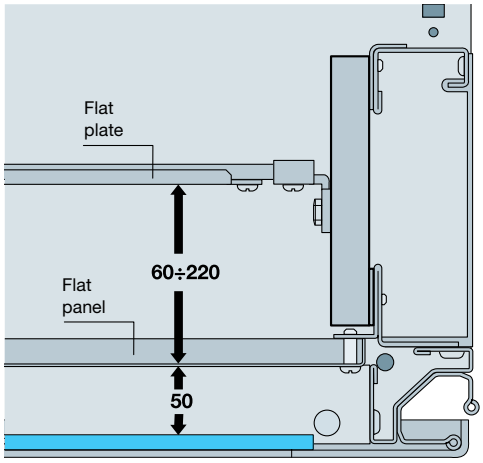

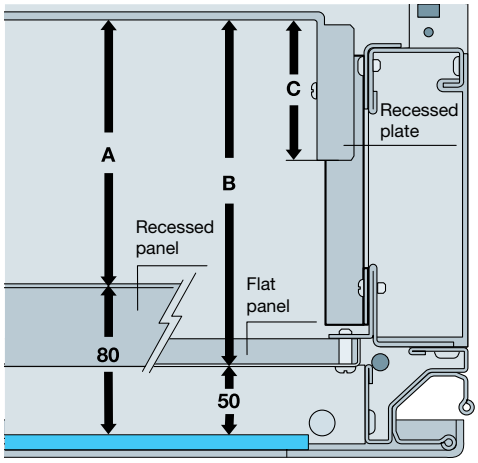

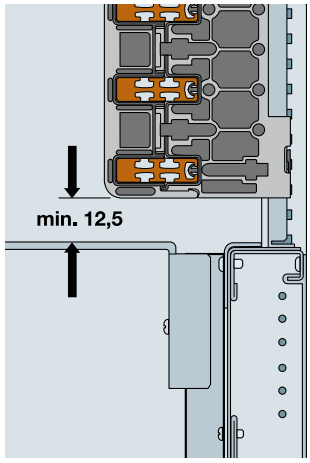

Minimum distance between back plate and busbar holder

Structure	H recessed plate (mm)	A (mm)	B (mm)	C (mm)
ArTu K D≤300mm	200	45÷220	75÷250	28
	400	110÷220	140÷250	95
ArTu K D=500mm	200	45÷200	75÷200	28
	400	110÷270	140÷300	95
	600	250÷380	280÷410	240

> Selection by components page 5/53 > In-depth technical information page 6/1 > Overall dimensions page 7/1

STRUCTURES WITHOUT SEGREGATION - Kit for switchgear with standard frames D≥225mm

Kit per OT160÷1600

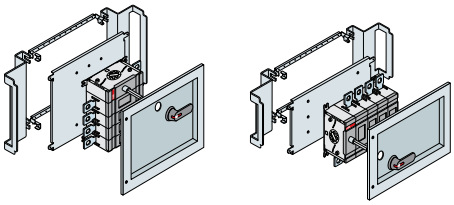

Description	Code	Dimensions (mm) H	W	Poles	Control	Maximum length handle	Minimum length shaft
Kit OT160/200/250/315/400 vertical	KO2260	300	600	E03-04	Lateral	80mm (Ø6)-125mm (Ø12)	130mm (Ø6)-166mm (Ø12)
Kit OT160/200/250/315/400 horizontal	KO2261	300	600	E03-04	Lateral	80mm (Ø6)-125mm (Ø12)	130mm (Ø6)-166mm (Ø12)
Kit OT630/800 vertical	KO3660	400	600	E03-04	Lateral	175mm	166mm
Kit OT1000-1600A vertical	KO1250 (*)	600	600	E12-22	Central	Handle "T" 400mm	166mm
Kit OT160/200/250/315/400 vertical	KO2280	300	800	E03-04	Lateral	80mm (Ø6)-125mm (Ø12)	130mm (Ø6)-166mm (Ø12)
Kit OT160/200/250/315/400 horizontal	KO2281	300	800	E03-04	Lateral	80mm (Ø6)-125mm (Ø12)	130mm (Ø6)-166mm (Ø12)
Kit OT630/800 vertical	KO3680	400	800	E03-04	Lateral	175mm	166mm

(*) Central control with butterfly lever.

Apparatus of the OETL series up to 1600A (not motor operated) and OESA up to 800A (not motor operated) can be installed inside the floor-mounted ArTu K switchgear. Again in this case, according to the dimensions of the apparatus, a plain back plate must be used (PF or FR…) and a panel (PC or PR…) of appropriate height and depth. The useful space between panel and door is 50mm. For larger-sized handles, use plain recessed panels RR… (see dimensions in table).

Plain flat, plain recessed back plates

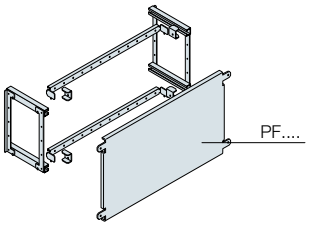

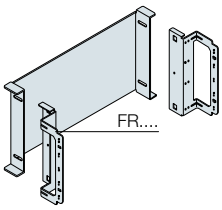

H (mm)	Back plates: Plain flat 12 DIN mod. W=390mm	24 DIN mod. W=600mm	36 DIN mod. W=800mm	48 DIN mod. W=1000mm	Plain recessed 24 DIN mod. W=600mm	36 DIN mod. W=800mm
100						
200	PF2401	PF2601	PF2801	PF2100	FR2600	FR2800
300	PF3403	PF3601	PF3801	PF3100		
400	PF4401	PF4601	PF4801	PF4100	FR4600	FR4800
600	PF6401	PF6601	PF6801	PF6100	FR6600	FR6800

Can be used to mount all the non-modular apparatus.

> Selection by components page 5/53 > In-depth technical information page 6/1 > Overall dimensions page 7/1

5

STRUCTURES WITHOUT SEGREGATION - Kit for switchgear with standard frames D≥225mm

Modular blind panels, recessed and ventilated

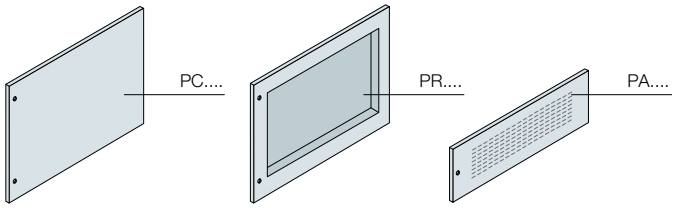

	Panels							
	Plain flat				Plain recessed		Ventilated	
H (mm)	12 DIN mod. W=390mm	24 DIN mod. W=600mm	36 DIN mod. W=800mm	48 DIN mod. W=1000mm	12 DIN mod. W=390mm	24 DIN mod. W=600mm	36 DIN mod. W=800mm	48 DIN mod. W=1000mm
100	PC1400	PC1600	PC1800	PC1210			PA1600	PA1010
200	PC2400	PC2600	PC2800	PC1220	PR2600	PR2800	PA2600	PA2010
300	PC3400	PC3600	PC3800	PC1230				
400	PC4400	PC4600	PC4800	PC1240	PR4600	PR4800		
500				PC1250				
600	PC6400	PC6600	PC6800	PC1260	PR6600	PR6800		
800		PC8600	PC8800					
	Blind panels							
1600		PC1660	PC1680					
1800	PC1840	PC1860	PC1880					
2000	PC2040	PC2060	PC2080					

Can be used to mount all the non-modular apparatus.

Back plates

Pair of crosspieces included in codes AD1049, AD1050, AD1051

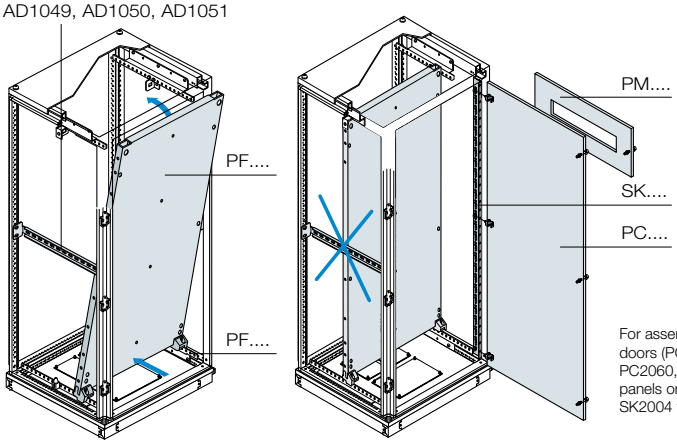

For assembly of the counter doors (PC1860, PC1880, PC2060, PC2080) or modular panels order the SK1804 or SK2004 functional frames.

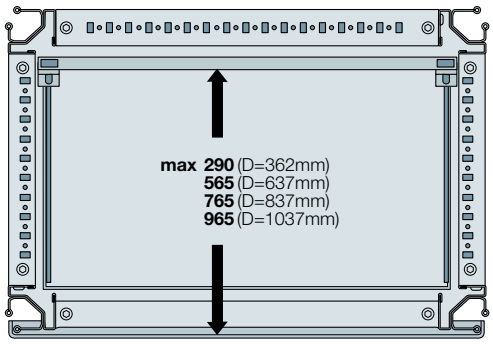

H (mm)	Galvanised sheet back plate		Track for front insertion		
	24 DIN mod. W=600mm	36 DIN mod. W=800mm	D=362mm	D=637mm	D=837mm
1800	PF1806	PF1808	AD1049	AD1050	AD1051
2000	PF2006	PF2008			

> Selection by components page 5/53 > In-depth technical information page 6/1 > Overall dimensions page 7/1

STRUCTURES WITHOUT SEGREGATION - Kit for switchgear with standard frames D≥225mm

Panels for square measuring instruments

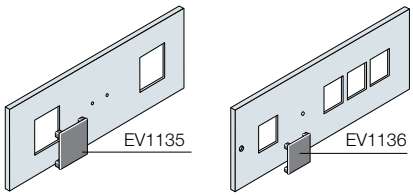

	2-instrument panel				4-instrument panel					
	72x72mm		96x96mm		72x72mm			96x96mm		
H (mm)	24 DIN mod. W=600mm	36 DIN mod. W=800mm	24 DIN mod. W=600mm	36 DIN mod. W=800mm	24 DIN mod. W=600mm	36 DIN mod. W=800mm	48 DIN mod. W=1000mm	24 DIN mod. W=600mm	36 DIN mod. W=800mm	48 DIN mod. W=1000mm
200	PS2720	PS2728	PS2960	PS2968	PS4720	PS4728	PS2017	PS4960	PS4968	PS2019

These allow installation of measuring instruments and relative changeover switches.

Square instrument hole covers

Code	Description
EV1135	Hole cover of 72x72mm instrument black RAL 9005
EV1136	Hole cover of 96x96mm instrument black RAL 9005

Installation of terminal boxes on DIN rail

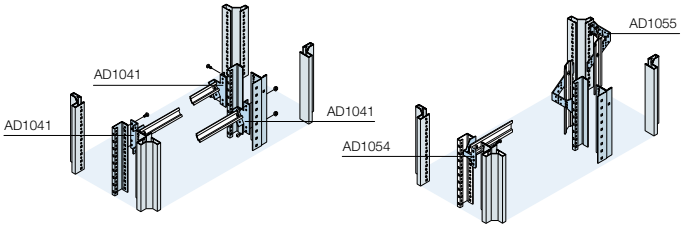

	Terminal box mounting position		
Installation on DIN rail	Structure	Internal cable container	External cable container
Horizontal	AD1054		
Horizontal angled 45°	AD1041		
Vertical		AD1055	AD1055

Installation of terminal boxes on DIN rail and earthing busbar

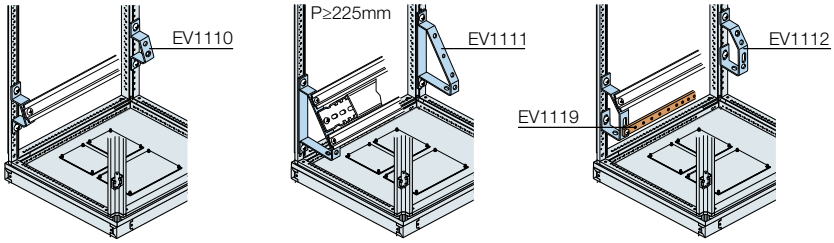

	Supporti inclinati per morsettiere e barre di terra
Code	Description
EV1110-EV2110	Angled supports 1 row of terminals
EV1111	Angled supports double row of terminals
EV1112-EV2112	Angled supports 1 row of terminals + earth

> Selection by components page 5/53 > In-depth technical information page 6/1 > Overall dimensions page 7/1

SEGREGATED STRUCTURES - Kit for switchgear D≥500mm

Installation on DIN rail

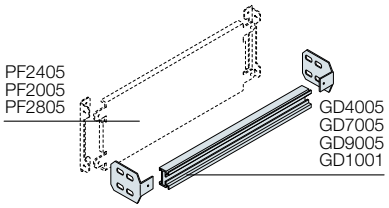

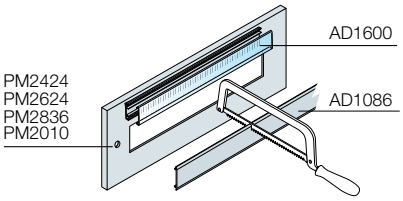

	W=390mm		W=600mm		W=800mm		W=1000mm	
H (mm)	DIN rail kit 12 DIN mod.	Panel 1 DIN row 12 DIN mod.	DIN rail kit 24 DIN mod.	Panel 1 DIN row 24 DIN mod.	DIN rail kit 36 DIN mod.	Panel 1 DIN row 36 DIN mod.	DIN rail kit 48 DIN mod.	Panel 1 DIN row 48 DIN mod.
200	GD4005	PM2424	GD7005	PM2624	GD9005	PM2836	GD1001	PM2010

5

Panels for square measuring instruments

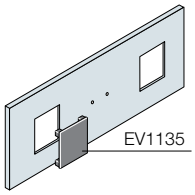

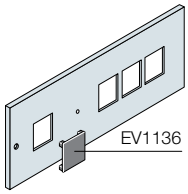

	2-instrument panel				4-instrument panel					
	72x72mm		96x96mm		72x72mm			96x96mm		
H (mm)	24 DIN mod. W=600mm	36 DIN mod. W=800mm	24 DIN mod. W=600mm	36 DIN mod. W=800mm	24 DIN mod. W=600mm	36 DIN mod. W=800mm	48 DIN mod. W=1000mm	24 DIN mod. W=600mm	36 DIN mod. W=800mm	48 DIN mod. W=1000mm
200	PS2720	PS2728	PS2960	PS2968	PS4720	PS4728	PS2017	PS4960	PS4968	PS2019

These allow installation of measuring instruments and relative changeover switches.

Square instrument hole covers

Code	Description
EV1135	Hole cover of 72x72mm instrument black RAL 9005
EV1136	Hole cover of 96x96mm instrument black RAL 9005

Modular back plate

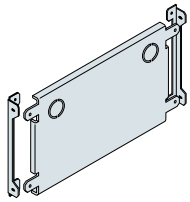

	Back plates			
	Blind flat			
H (mm)	12 DIN mod. W=390mm	24 DIN mod. W=600mm	36 DIN mod. W=800mm	48 DIN mod. W=1000mm
200	PF2405	PF2005	PF2805	PF2090
300	PF3405	PF3005	PF3805	PF3090
400	PF4405	PF4005	PF4805	PF4090
600	PF6405	PF6005	PF6805	PF6090
		PF8005	PF8805	

Can be used to mount all the apparatus.

> Selection by components page 5/53 > In-depth technical information page 6/1 > Overall dimensions page 7/1

SEGREGATED STRUCTURES - Kit for switchgear D≥500mm

Modular blind panel

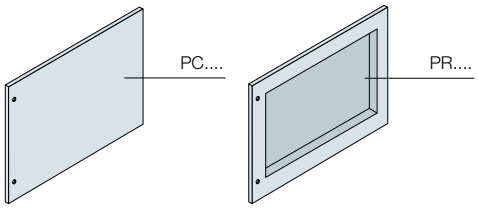

	Panels					
	Flat				Recessed	
H (mm)	12 DIN mod. W=390mm	24 DIN mod. W=600mm	36 DIN mod. W=800mm	48 DIN mod. W=1000mm	24 DIN mod. W=600mm	36 DIN mod. W=800mm
100	PC1400	PC1600	PC1800	PC1210		
200	PC2400	PC2600	PC2800	PC1220	PR2600	PR2800
300	PC3400	PC3600	PC3800	PC1230		
400	PC4400	PC4600	PC4800	PC1240	PR4600	PR4800
500				PC1250		
600	PC6400	PC6600	PC6800	PC1260	PR6600	PR6800
800		PC8600	PC8800			

5

Useful internal space

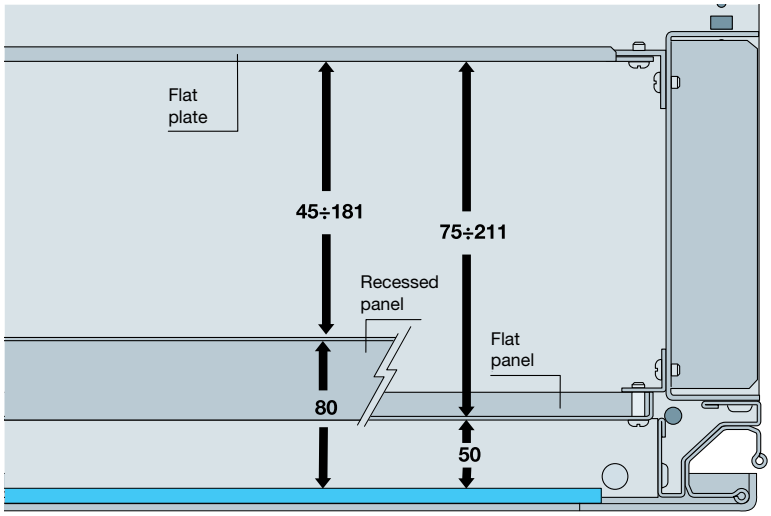

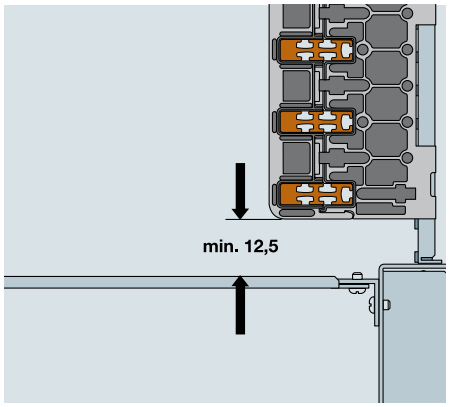

Minimum distance between back plate and busbar holder.

> Selection by components page 5/53 > In-depth technical information page 6/1 > Overall dimensions page 7/1

SEGREGATED STRUCTURES - Kit for switchgear D≥500mmm

Horizontal installation

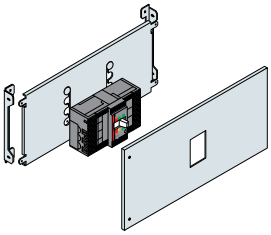

Front or rear circuit-breaker terminals	No. poles	Dimensions H (mm)	Fixed		Fixed+RCD mod. undern.	Plug-in		Withdrawable	
			12 DIN mod W=390mmm	24 DIN mod W=600mm	24 DIN mod W=600mm	12 DIN mod W=390mm	24 DIN mod W=600mm	12 DIN mod W=390mm	24 DIN mod W=600mm
Tmax T1	3-4	200	KT1410	KT1110	KT1100 [1]				
Tmax T2	3-4	200	KT2410	KT2110		KT2420	KT2120		
Tmax T3	3-4	200	KT3410	KT3110		KT3420	KT3120		
Tmax T4	3-4	200	KT4120	KT4124			KT4113		
Tmax T4	3-4	300							KT4130
Tmax T5 (400A)	3-4	300	KT5122	KT5136			KT5420		KT5430
Tmax T5 (630A)	3-4	300	KT5122	KT5136			KT5421		KT5431
Tmax T6	3-4	500		KT6110					KT6130
Tmax T7 - Emax X1	3-4	400		KT7115					
	3-4	500							KT7561
Tmax XT1	3[2]-4	200	KY1411	KY1611			KY1621		
Tmax XT1	4	200			KY1601				
Tmax XT2	3[2]-4	200	KY2411	KY2611		KY2421	KY2621		
Tmax XT2	3[2]-4	300							KY2631
Tmax XT2	4	200			KY2601				
Tmax XT3	3[2]-4	200	KY3411	KY3611					
Tmax XT3	4	300			KY3601				
Tmax XT3	3[2]-4	300				KY3421	KY3621		
Tmax XT4	3[2]-4	200	KY4411	KY4611			KY4621		
Tmax XT4	4	200			KY4601				
Tmax XT4	3[2]-4	300							KY4631

[1] Version for Tmax with differential module underplaced RC 221/222 (only 4P).

[2] For 3 poles breakers please order accessory flange Code: AD3305 XT1 3P Flange for plate-mounting - AD3306 XT2 3P Flange for plate-mounting - AD3307 XT3 3P Flange for plate-mounting - AD3308 XT4 3P Flange for plate-mounting.

> Selection by components page 5/53 > In-depth technical information page 6/1 > Overall dimensions page 7/1

SEGREGATED STRUCTURES - Kit for switchgear D≥500mm

Installation of apparatus vertically

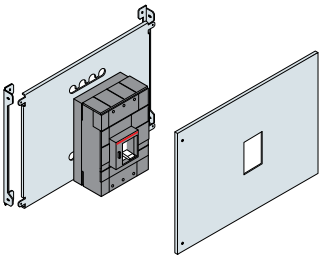

Front or rear circuit-breaker terminals	No. poles	Dimensions H (mm)	Fixed			Fixed+RCD mod. undern.		Withdrawable	
			12 DIN mod W=390mm	24 DIN mod W=600mm	36 DIN mod W=800mm	12 DIN mod W=390mm	24 DIN mod W=600mm	12 DIN mod W=390mm	24 DIN mod W=600mm
Tmax T1-T2-T3-XT1-XT3 on DIN Rail 35		200	(see page 5/29)						
Tmax T4	3-4	400	KT4129	KT4121			KT4222		KT4128
Tmax T5 (400A)	3-4	400	KT5137	KT5128			KT5129		KT5223
Tmax T5 (630A)	3-4	400	KT5137	KT5128		KT5125	KT5123	KT5126	KT5124
Tmax T6	3-4	500		KT6210					KT6230
Tmax T7	3-4	500		KT7215					KT7230
Tmax T8	3-4	900			KT8210				
Tmax XT4	3[1]-4	300	KY4412	KY4612					

[1] For 3 poles breakers please order accessory flange Code: AD3305 XT1 3P Flange for plate-mounting - AD3306 XT2 3P Flange for plate-mounting - AD3307 XT3 3P Flange for plate-mounting - AD3308 XT4 3P Flange for plate-mounting.

> Selection by components page 5/53 > In-depth technical information page 6/1 > Overall dimensions page 7/1

SEGREGATED STRUCTURES - Kit for switchgear D≥500mmm

Installation of equipped apparatus horizontally

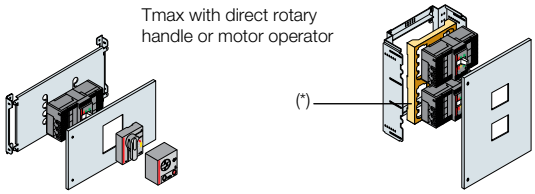

Front or rear circuit-breaker terminals	No. poles	Dimensions H (mm)	Fixed				Plug-in				Withdrawable			
			24 DIN mod. W=600mm				24 DIN mod. W=600mm				24 DIN mod. W=600mm			
			Direct rotary handle	Motor operator	Interlocked	Interlocked motor operated	Direct rotary handle	Motor operator	Interlocked	Interlocked motor operated	Direct rotary handle	Motor operator	Interlocked	Interlocked motor operated
Tmax T1	3-4	200		KT1110[1]										
Tmax T2	3-4	200	KT2210	KT2110[1]										
Tmax T3	3-4	200	KT3115	KT3110[1]			KT3124							
Tmax T3	3-4	600			KT3132	KT3132								
Tmax T4	3-4	200	KT4124	KT4310			KT4113							
Tmax T4	3-4	300									KT4130	KT4320[2]		
Tmax T4	3-4	600			KI4116	KI4116			KI4116	KI4119			KI4117	KI4118
Tmax T5 (400A)	3-4	300	KT5136	KT5310			KT5420				KT5430	KT5320[2]		
Tmax T5 (630A)	3-4	300	KT5136	KT5310			KT5421				KT5431	KT5321[2]		
Tmax T5	3-4	600			KI5116	KI5116			KI5116	KI5119			KI5117	KI5118
Tmax T6	3-4	500	KT6220	KT6221							KT6130	KT6134[2]		
Tmax T6	3-4	800			KT6142	KT6143							KT6144	KT6145
Tmax T7** - Emax X1	3-4	400	KT7115[3]	KT7115	KT7115	KT7115								
Tmax XT1	3/4	200	KY1605	KY1607										
Tmax XT2	3/4	200	KY2605	KY2607										
Tmax XT3	3/4	200	KY3605	KY3607										
Tmax XT3 + XT1	3[4]/4	500			KY1131									
Tmax XT3	3[4]/4	500			KY3131									
Tmax XT4	3[4]/4	500			KY4141									
Tmax XT4	3/4	200	KY4607	KY4604										

(*) Interlock plate to be ordered with the circuit-breakers.

(**) Kit for a single circuit-breaker.

[1] Kit for 390mm width for T1 KT1410, T2 KT2410, T3 KT3410.

[2] Only Form 2 segregation.

[3] Use with protruding door PV..63 - PV..83.

[4] For 3 poles breakers please order accessory flange Code: AD3305 XT1 3P Flange for plate-mounting - AD3306 XT2 3P Flange for plate-mounting - AD3307 XT3 3P Flange for plate-mounting - AD3308 XT4 3P Flange for plate-mounting.

> Selection by components page 5/53 > In-depth technical information page 6/1 > Overall dimensions page 7/1

SEGREGATED STRUCTURES - Kit for switchgear D≥500mm

Installation of equipped apparatus vertically (Form 2 only)

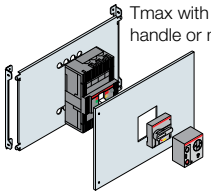

Front or rear circuit-breaker terminals	No. poles	Dimensions H (mm)	Fixed				Plug-in				Withdrawable			
			24 DIN mod. W=600mm				24 DIN mod. W=600mm				24 DIN mod. W=600mm			
			Direct rotary handle	Motor operator	Interlocked	Interlocked motor operated	Direct rotary handle	Motor operator	Interlocked	Interlocked motor operated	Direct rotary handle	Motor operator	Interlocked	Interlocked motor operated
Tmax T6	3-4	500	KT6132	KT6133							KT6230	KT6141		
Tmax T7**- Emax X1	3-4	500		KT7215	KT7215	KT7215						KT7230	KT7230	KT7230

(*) Interlock plate to be ordered with the circuit-breakers.

(**) Kit for a single circuit-breaker.

Installation of Emax circuit-breakers vertically

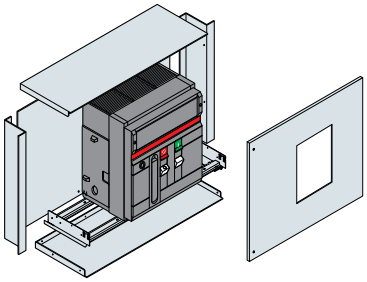

Circuit-breaker	No. poles	Dimensions H (mm)	Fixed			Withdrawable		
			24 DIN mod. W=600mm	36 DIN mod. W=800mm	48 DIN mod. W=1000mm	24 DIN mod. W=600mm	36 DIN mod. W=800mm	48 DIN mod. W=1000mm
Emax X1/X1 interlocked**	3-4	500	KT7215[1]			KT7230[1]		
Emax E1-E2	3-4	600	KE2215			KE2235		
Emax E3	3-4	600	KE3205			KE3236		
Emax E3-E3 interlocked**	3/4	600		KE4214			KE4234	
Emax E4/E4 interlocked**	3-4[2]	600		KE5214			KE5234	
Emax E4 Full size	4	600			KE4100			KE5236
Emax E6 50% Neutral	3-4	600			KE6340			KE6343

The kit for installing Emax air circuit-breakers in the versions of switchgear indicated includes the pre-drilled front panel and the resting crosspieces. To install Emax E1…E3 circuit-breakers, always use with 700mm depth (therefore also depth 900mm with kit SK..81), for Emax E4 use structures with 900mm depth or several structures placed side by side at the rear It is necessary to install one E6 breaker per column (depth D=900 mm), at a maximum height of H=1100 mm; moreover, under the E6 breaker it is not possible to install any other device.

To complete the 36 module structure, ask for the special back plates (PF.... see page 5/28).

[1] This kit can also be used for the motor operated version.

[2] This kit can also be used for the motor operated, interlocked and interlocked motor operated versions.

(**) Kit for a single circuit-breaker.

> Selection by components page 5/53 > In-depth technical information page 6/1 > Overall dimensions page 7/1

Form 2-3-4 segregations for structures D≥500mm

Segregations according to the IEC 60439-1 and IEC 61439 -1 -2 Standards

By form of segregation, the type of subdivision provided inside the switchgear is meant. Segregation by means of barriers or partitions (metallic or insulating) can have the purpose of:

- Ensuring protection against direct contacts (at least IPXXB), in the case of accessing a part of the switchgear with the power turned off, in relation to the rest of the switchgear left live.
- Reducing the probability of an internal arc striking and propagating.
- Preventing passage of solid bodies between different parts of the switchgear (at least IP2X degree of protection).

By partition, the separation element between two compartments is meant, whereas the barrier protects the operator against direct contacts and the effects of an arc of the breaking apparatus in the normal access direction.

Simbol	Form 1	Form 2	Form 3	Form 4
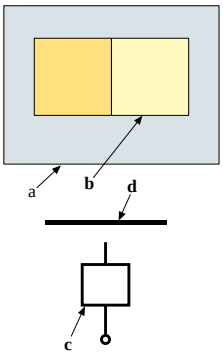	(no internal segregation)	(segregation of the busbars from the functional units)	(separation of the busbars from the functional units + separation of the functional units from each other)	(separation of the busbars from the functional units + separation of the functional units from each other + separation of the terminals from each other)
	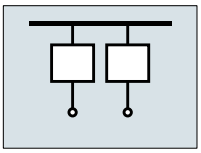	Form 2a Terminals not separated from the busbars 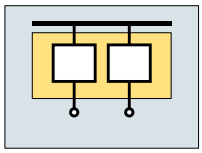	Form 3a Terminals not separated from the busbars 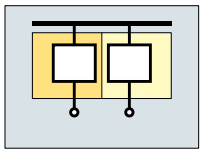	Form 4a Terminals in the same compartment as the associated functional unit 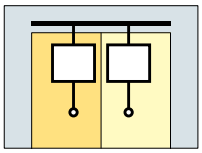
		Form 2b Terminals separated from the busbars 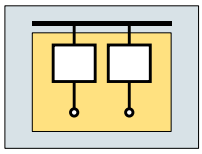	Form 3b Terminals separated from the busbars 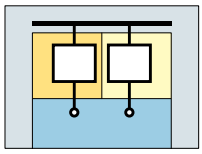	Form 4b Terminals not in the same compartment as the associated functional unit 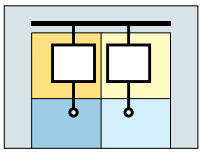

Caption
a Housing
b Internal segregation
c Functional units including the terminals for the associated external conductors
d Busbars, including the distribution busbars

Note

The segregations can be made in ArTu K 390 and 600mm wide switchgear in 500/700/900mm depths with closed functional frame and segregated kits. Form 2 is obtained automatically using the segregated type kits.

To obtain the desired form of segregation, the segregations kits relative to the previous forms must be ordered (e.g. Form 4 = Form 2 kit + Form 3 kit + Form 4 kit).

> Selection by components page 5/53 > In-depth technical information page 6/1 > Overall dimensions page 7/1

Form 2-3-4 segregations for structures D≥500mm

Examples of segregation

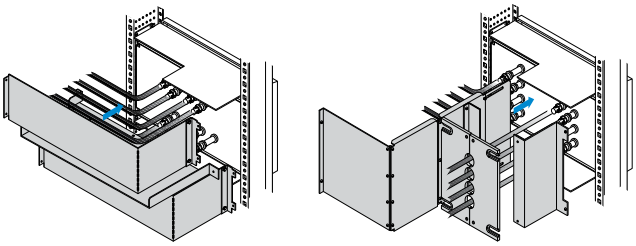

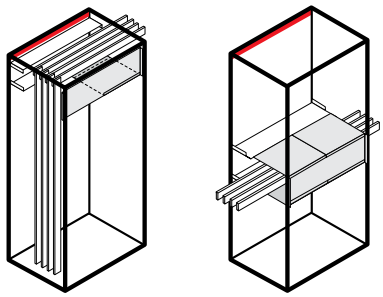

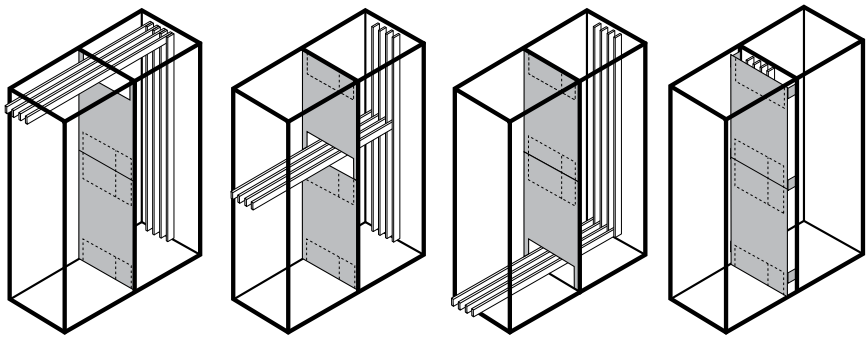

> Selection by components page 5/53 > In-depth technical information page 6/1 > Overall dimensions page 7/1

Form 2-3-4 segregations for structures D≥500mm

Forms of segregation

Selection of segregation according to the height of the kit			Form 2a	Form 3a				
Installation	**Height kit (mm)**			**12 DIN mod. W=390mm**	**24 DIN mod. W=600mm**	**36 DIN mod. W=800mm**	**48 DIN mod. W=1000mm**	
Horizontal moulded-case circuit-breaker	200		See kit on page 5/30	SH4000	SH6000	SH8000	SH1100	
	300		See kit on page 5/30	SH4000	SH6000	SH8000	SH1100	
	400		See kit on page 5/30		SH6000	SH8000	SH1100	
	500		See kit on page 5/30		SH6000	SH8000	SH1100	
	500	Tma T7-Emax X1 withdr.	See kit on page 5/30		Included in Form 2 kit	SH8000	SH1100	
	600		See kit on page 5/30		SH6000	SH8000	SH1100	
	600	T4-T5 interlocked	See kit on page 5/32		SH6000	SH8000	SH1100	
	800				SH6000	SH8000	SH1100	
Vertical moulded-case circuit-breaker 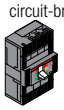	400		See kit on page 5/31					
	500	Emax X1-Tmax T6, T7 fixed	See kit on page 5/31					
	600		See kit on page 5/31					
	800		See kit on page 5/31					
Vertical air circuit-breaker 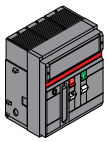	500	Emax X1-Tmax T7 withdr.	See kit on page 5/32		Included in Form 2 kit	Included in Form 2 kit		
	600	Emax E1-E2-E3 fixed	See kit on page 5/33		Included in Form 2 kit	Included in Form 2 kit		
	600	Emax E1-E2-E3 withdr.	See kit on page 5/33		Included in Form 2 kit	Included in Form 2 kit		
	600	Emax E4 fixed	See kit on page 5/33		Included in Form 2 kit	Included in Form 2 kit		
		Emax E4 withdr.	See kit on page 5/33		Included in Form 2 kit	Included in Form 2 kit		
	600	Emax E6 fixed	See kit on page 5/33				Included in Form 2 kit	
	600	Emax E6 withdr.	See kit on page 5/33				Included in Form 2 kit	

Uprights for switchgear D=900mm

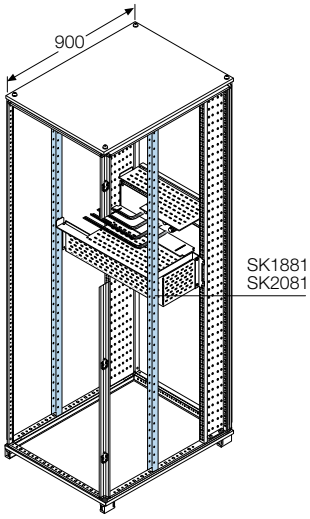

Example of Form 2a segregation

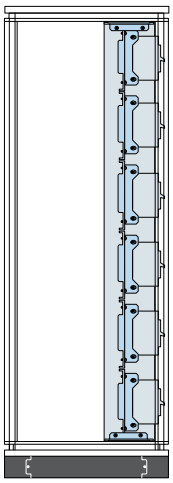

Example of Form 3a segregation

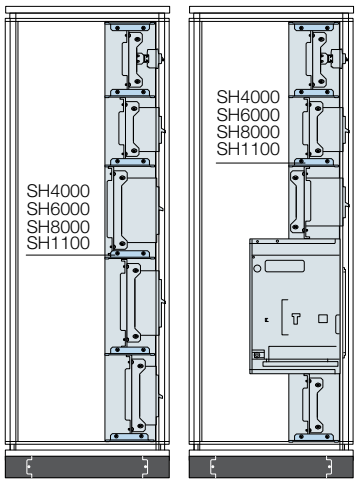

> Selection by components page 5/53 > In-depth technical information page 6/1 > Overall dimensions page 7/1

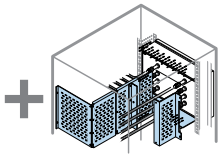
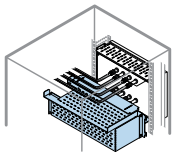
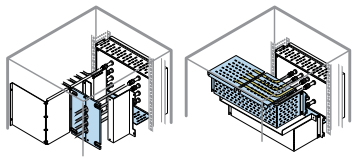

	Form 3b										Form 4b		
	Horizontal circuit-breaker					Vertical circuit-breaker					Horizz. CB	Vertical CB	
	12 DIN mod. W=390mm D=500/700mm	24 DIN mod. W=600mm D=500/700	D=700mm	D=900mm	24 DIN mod. W=600mm D=900mm	24 DIN mod. W=600mm D=500mm	24 DIN mod. W=600mm D=700mm	24 DIN mod. W=600mm D=900mm	36 DIN mod. W=800mm D=900mm	48 DIN mod. W=1000mm D=900mm	Structure D=500/700/ 900mm	24mod.DIN W=600mm P=500mm	24mod.DIN W=600mm P=700mm
	FH3224	FH3220			FH1020						FH4220		
	FH3434	FH3430			FH1030						FH4430		
	FH3544	FH3540			FH1040						FH4540		
		FH3650			FH1050						FH4650		
			FH7580	FH7510									
	FH3764 (1)	FH3760			FH1060						FH4760		
		FV4557 (3)			FV4557 (3)						Incluso nel kit Forma 3D		
		FH3680 (2)									4 x FH4220		
						FV3456	FV3458					FV4456	FV4458
						FV3556	FV3558					FV4556	FV4558
							FV3668						FV4668
							FV3788						FV4788
							FH3960	FH3690					
							FH3960	FH3690					
							FH3961	FH3691					
									FH3965	FH3190			
									FH3966	FH3191			
										FH3190			
										FH3191			

(1) Only for blind back plate H=600mm. - (2) Only for Tmax T6 interlocked in fixed/plug-in/withdrawable/motor operated versions. - (3) For use with Tmax T4 - T5.

Emax segregation Form 3b
Rear segregation

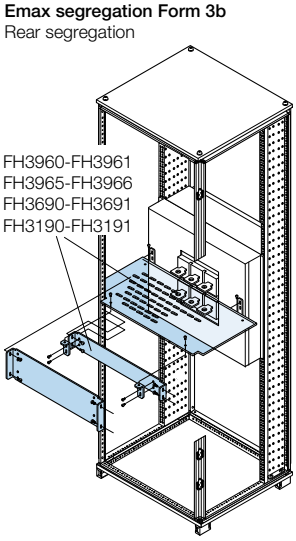

Example of Emax segregation Form 4b
Rear segregation

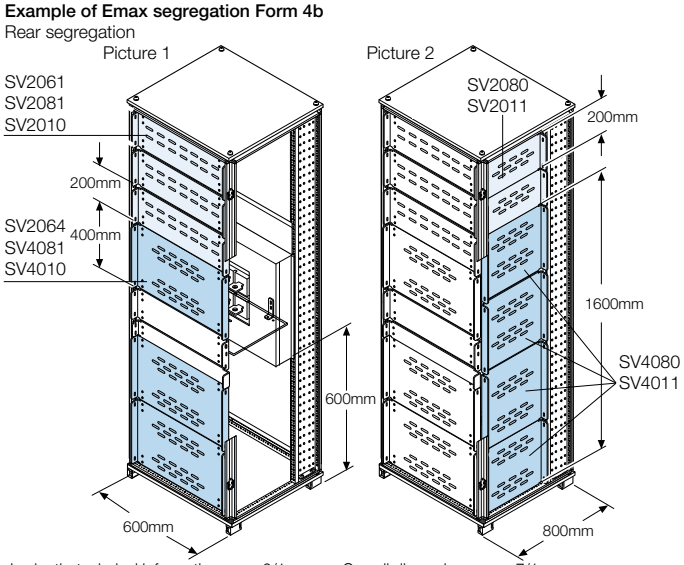

Picture 1

Rear segregation		
Structure height 1800mm	Structure height 2000mm	Emax installed
No.3 SV2064	No.3 SV2064	No.1
No.2 SV2061	No.3 SV2061	

Picture 2

Side segregation		
Side segregation 1800mm	Side segregation 2000mm	Emax installed
No.1 SV4080	No.1 SV4080	No.1
No.1 SV2080	No.2 SV2080	

> Selection by components page 5/53
> In-depth technical information page 6/1
> Overall dimensions page 7/1

Form 2-3-4 segregations for structures D≥500mm

Busbar segregation

The SH2030, SH4030, SH1030, SH8570, SH1090 ed SV2061, SV4061, SV3060, SV2064, SV2081, SV3080, SV4081, SV2010, SV3010, SV4010 versions are reciprocally indispensable for assembly.
The SH4030, SH1030, SH8570, SH1090 model must also be used in combination with shelves SH4000, SH6000, SH8000, SH1100 to make complete horizontal segregations of the busbar system.

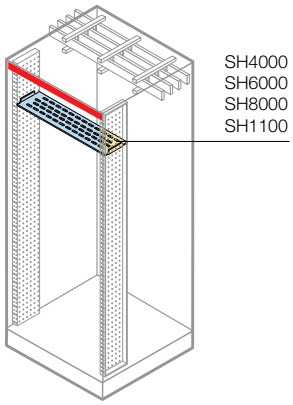

+

Horizontal Busbars	12 DIN mod. W=390mm	24 DIN mod. W=600mm	36 DIN mod. W=800mm	48 DIN mod. W=1000mm	
Universal horizontal shelf	SH4000 (1)	SH6000 (1)	SH8000 (1)	SH1100	
Horizontal busbar segregation					
Vertical busbar segregation ≤4000A H=200mm					
Vertical busbar segregation >4000A H=300mm					
Vertical busbar segregation H=400mm					
Horizontal segregation for internal cable container W=200mm					
Horizontal segregation for external cable container W=300mm					
Horizontal segregation for structure used as busbar container W=390mm					
Horizontal segregation for structure used as busbar container W=600mm					

Side segregation

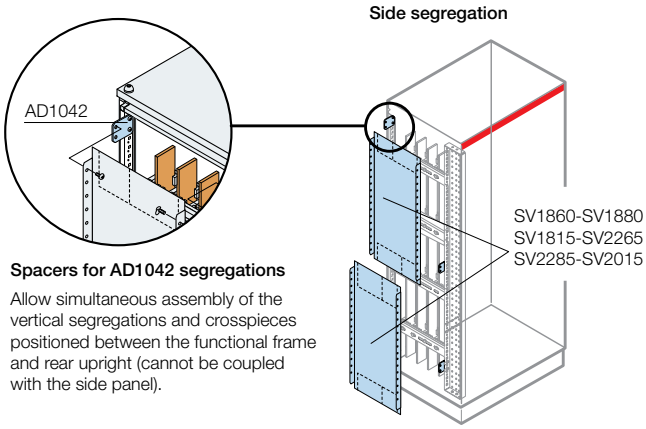

Spacers for AD1042 segregations

Allow simultaneous assembly of the vertical segregations and crosspieces positioned between the functional frame and rear upright (cannot be coupled with the side panel).

Vertical Busbars	Structure D=500mm	Structure D=700mm	Structure D=900mm	
Vertical segregation for structure H=1600mm - No. 4 pieces		SV4080	SV4011	
Vertical segregation for structure H=1800mm - No. 2 pieces	SV1860	SV1880	SV1815	
Vertical segregation for structure H=2000mm	SV2265	SV2285	SV2015	
Rear segregation for internal cable container				
Segregation/front door for external cable container W=300mm				
Vertical segregation modular for structure H=200mm		SV2080	SV2011	

> Selection by components page 5/53 > In-depth technical information page 6/1 > Overall dimensions page 7/1

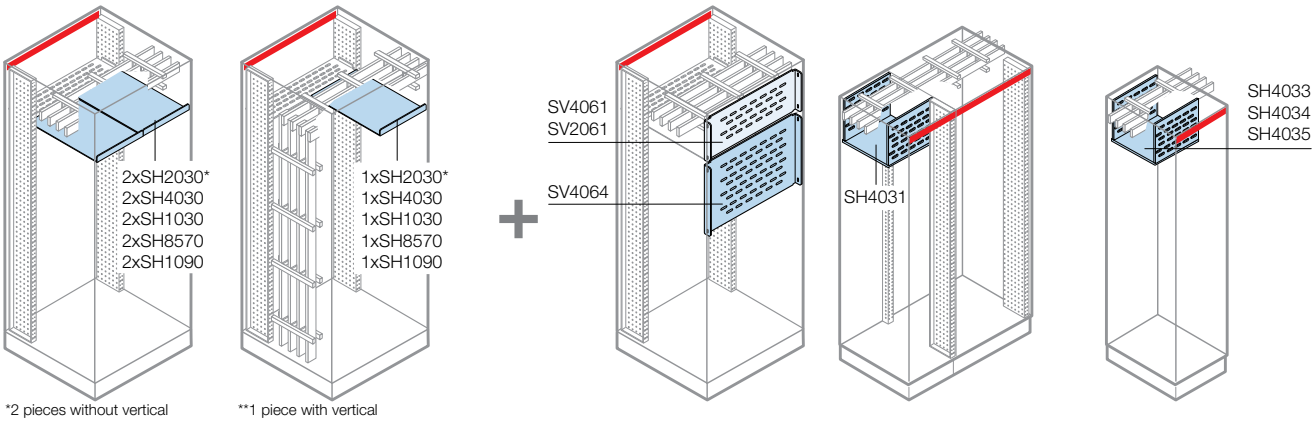

*2 pieces without vertical busbar system

**1 piece with vertical busbar system

	12 DIN mod. W=390mm D=500/700	24 DIN mod. W=600mm D=500/700	24 DIN mod. W=600mm D=900	36 DIN mod. WL=800mm D=500/700	48 DIN mod. W=1000mm D=900	12 DIN mod. W=390mm	24 DIN mod. W=600mm	36 DIN mod. W=800mm	48 DIN mod. W=1000mm	Structure D=500mm	Structure D=700mm
	SH4030	SH2030	SH1030	SH8570	SH1090						
						SV4061	SV2061	SV2081	SV2010		
							SV3060	SV3080	SV3010		
							SV2064	SV4081	SV4010		
										SH4031	SH4031
										SH4033	SH4033
										SH4034	SH4034
										SH4035	SH4035

Rear segregation
Cable container

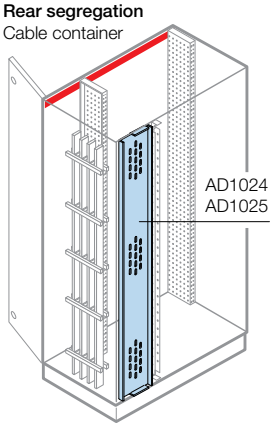

Front segregation
External cable container

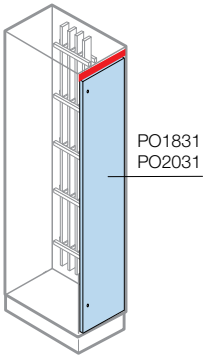

	Structure H=1800mm	Structure H=2000mm	Structure H=1800mm	Structure H=2000mm
	AD1024	AD1025		
			PO1831	PO2031

> Selection by components page 5/53 > In-depth technical information page 6/1 > Overall dimensions page 7/1

ArTu K Modular Structures
Distribution system

Modular dividers

		Single-pole						Three-poles	
		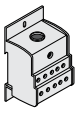		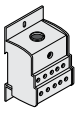		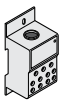		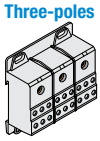	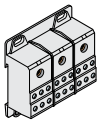
Code		**AD1076**	**AD1080**[1]	**AD1007**	**D1081(2)**	**AD1030**	**AD1031**	**AD1075**	**AD1006**
In	(A)	125	125	175	175	250	400	125	175
Icw	(kA)	4.4	4.2	11	1.1	21	21	4.4	11
Version	pole	1	1	1	1	1	1	3	3
Installation		DIN35/plate	DIN35/plate	DIN35/plate	DIN35/plate	DIN35/plate	DIN35/plate	DIN35/plate	DIN35/plate
Power supply Ø cable (mm²)	min.	10	6	16	10	35	95	10	16
	max	35	35	70	70	120	185	35	70
No. outgoing feeder Ø cable (mm²)	1,5÷10					4	4		
	2,5÷16	10	6	10	6	5	5	6	6
	2,5÷25					2	2		
Dimensions HxWxD	(mm)	71x45x42,5	74x27x47	71x45x42,5	92x35x49	95.5x45x49	95.5x45x49	71.5x80x42,5	71.5x80x42,5
No. DIN modules		2,5	1,5	2,5	2	3	3	4.5	4.5
Rated service voltage Ue	(V)	1000 Vac 1500 Vdc	1000 Vac 1500 Vdc	1000 Vac 1500 Vdc	1000 Vac 1500 Vdc	1000 Vac 1500 Vdc	1000 Vac 1500 Vdc	1000 Vac 1500 Vdc	1000 Vac 1500 Vdc
Degree of protection	IP	20	20	20	20	20	20	20	20

		Four-poles					
			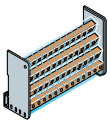	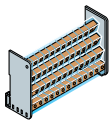	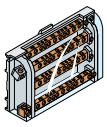	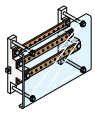	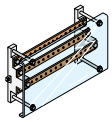
Code		**AD1004**	**AD1028**	**AD1029**	**AD1027**	**AD1034**	**AD1053**
In	(A)	125	125	125	160	250	250
Icw	(kA)	10	4.2	4.2	6.2	15	15
Ipk	(kA)	24	25	25	20	30	30
Version	poli	4.2	4	4	4	30	30
Installation		DIN35/plate	DIN35/plate	DIN35/plate	DIN35	4	4
Power supply Ø cable (mm²)	min.	6	6	6	10	with AD1038 brackets	with AD1038 brackets
	max	35	25 with cable terminal	25 with cable terminal	50		
No. outgoing feeder Ø cable (mm²)		1/6 5/phase				No. 22 holes M5 with 17,5mm pitch per phase (threaded busb. 20x5mm)	No. 32 holes M5 with 17,5mm pitch per phase (threaded busb. 20x5mm)
		1.5/6 4/neutral					
		1.5/10 2/phase	7	9			
		6/neutral					
		1.5/16		2			
		2.5/16			8		
		6/25	2	2	3		
Dimensions HxWxD	(mm)	74.5x98x45	93x89x48	96x126x48	90x160.5x50	150x600x70	150x800x70
No. DIN modules		5,5	5	7	9	24	36
Rated service voltage Ue	(V)	1000 Vac 1500 Vdc	440	440	440	500	500
Degree of protection	IP	20	20	20	20		

[1] Possibility of putting in parallel with AD1083 connections.

[2] Possibility of putting in parallel with comb type connection (not supplied).

> Selection by components page 5/53 > In-depth technical information page 6/1 > Overall dimensions page 7/1

Flexible busbars up to 1250A

Cross-section	In (A)	Code	No. busbar/ phase	Capacity (A) IP31	IP41	IP65	Dimensions WxW (mm)	Section dimensions (mm²)	Lenght (mm)	Weight (kg)
	250	BF1602	1	395	323	250	20x3	60	2000	1,42
	400	BF2502	1	498	460	400	20x5	100	2000	2,15
	500	BF4002	1	660	620	500	24x6	144	2000	3
	630	BF4012	1	758	702	630	32x5	160	2000	3,36
	1000	BF6302	1	1203	1140	1000	40x8	320	2000	6,33
	1250	BF8002	1	1515	1390	1250	50x10	500	2000	9,68

5

Flat drilled and threaded busbars for earthing connection

Cross-section	Code	Threading	Pitch	WxW (mm)	Length (mm)	AxB (mm)
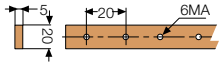	EV1119	6 MA	20	20x5	2000	
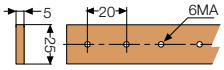	EV1120	6 MA	20	25x5	2000	
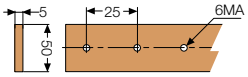	EV1121	6MA	25	50x5	2000	
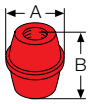	EV1122	6MA				34x30
	EV1123	8MA				34x30
	EV1124	6MA				40x50
	EV1125	8MA				40x50

> Selection by components page 5/53 > In-depth technical information page 6/1 > Overall dimensions page 7/1

ArTu K Modular Structures
Distribution system

Busbars with shaped section for applications up to 3200 A

Cross-section	In (A)	Code	No. busbar/ phase	Capacity (A) IP31	IP41	IP65	Icw max (kA)	Dimensions WxW (mm)	Section dimensions (mm²)	Lenght (mm)	Weight (kg)
	400	BA0400	1	630	520	400	35	20x20	200	1730	4
	800	BA0800	1	970	830	800	35	20x20	283	1730	4,4
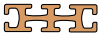	1250	BA1250	1	1400	1330	1250	75	20x60	603	1730	9,3
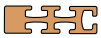	1600	BA1600	1	1820	1710	1600	75	20x60	703	1730	10
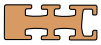	2000	BA2000	1	2350	2200	2000	100	25x60	1000	1730	14,8
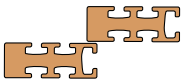	3200	BA2000	2	3600	3400	3200	100	25x60	2000	1730	29,6

> Selection by components page 5/53 > In-depth technical information page 6/1 > Overall dimensions page 7/1

Selection and assembly of flat busbars with shaped section and busbar holders

Using the correct number of busbar holders ensures resistance to electrodynamic forces in the case of a short-circuit. Assess the maximum distance (max X) not to be exceeded between two consecutive busbar holders according to the max. Icc.

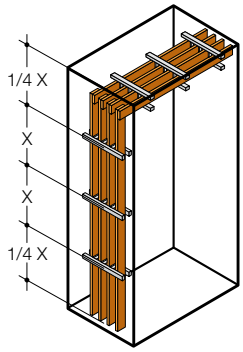

The distance between the first busbar holder and the end of the busbar must not exceed $^1/_4$ of "X".

5

Busbar	Capacity	Busbar holder	No. of busbar holders according to the max. I_{cc}															
			No. busbars per phase	25 kA	X max (mm)	35 kA	X max (mm)	50 kA	X max (mm)	65 kA	X max (mm)	75 kA	X max (mm)	85 kA	X max (mm)	100 kA	X max (mm)
		Lineare															
BA0400	400A	PB0803	1	4	550	5	425	-	-	-	-	-	-	-	-	-	-
		PB1601 (1)	1	4	550	4	550	-	-	-	-	-	-	-	-	-	-
		PB1603 (1)	1	4	550	4	550	-	-	-	-	-	-	-	-	-	-
BA0800	800A	PB0803	1	4	550	5	425	-	-	-	-	-	-	-	-	-	-
		PB1601 (1)	1	4	550	4	550	-	-	-	-	-	-	-	-	-	-
		PB1603 (1)	1	4	550	4	550	-	-	-	-	-	-	-	-	-	-
BA1250	1250A	PB1601	1	4	550	4	550	5	425	7	275	9	225	-	-	-	-
		PB1603	1	4	550	4	550	6	350	9	225	-	-	-	-	-	-
BA1600	1600A	PB1601	1	4	550	4	550	5	425	7	275	9	225	-	-	-	-
		PB1603	1	4	550	4	550	6	350	9	225	-	-	-	-	-	-
BA2000	2000A	PB3201	1	4	550	4	550	5	425	6	350	7	275	7	275	9	225
	3200A	PB3201	2	4	550	4	550	5	425	6	350	7	275	7	275	9	225
		Scalare															
BA0400	400A	PB0802	1	4	550	5	425	-	-	-	-	-	-	-	-	-	-
		PB1600 (1)	1	4	550	4	550	-	-	-	-	-	-	-	-	-	-
BA0800	800A	PB0802	1	4	550	5	425	-	-	-	-	-	-	-	-	-	-
		PB1600 (1)	1	4	550	4	550	-	-	-	-	-	-	-	-	-	-
BA1250	1250A	PB1600	1	4	550	4	550	5	425	7	275	8	250	-	-	-	-
BA1600	1600A	PB1600	1	4	550	4	550	5	425	7	275	8	250	-	-	-	-

(1) Can be used with the special AD1066 adapter.

max X = maximum distance not to be exceeded between two consecutive busbar holders.

> Selection by components page 5/53 > In-depth technical information page 6/1 > Overall dimensions page 7/1

ArTu K Modular Structures
Distribution system

Busbars with shaped section

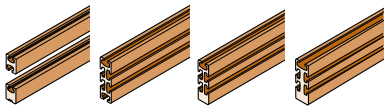

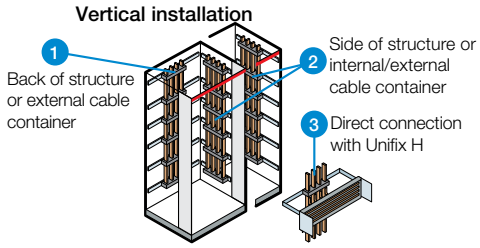

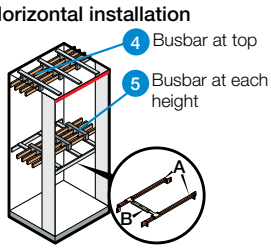

Selection and assembly of busbars and busbar holders

5

Busbar holder	Busbars with shaped section					Crosspieces for fixing to structure			
Type	In≤40÷800A	In=1250A	In=1600A	In=3200A	Installation	Switchgear without segregation	Segregated switchgear	Internal cable container	Additional cable container
Scaled up to 800A PB0802 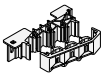	BA0400 BA0800				1	TV4001 (W=390mm)		TV3000 (D=150mm)	TV3201 (W=300mm)
					2			TV3101 (D=225mm)	TV3101 (D=225mm)
								TV5101 (D=300mm)	TV5101 (D=300mm)
Scaled up to 1600A PB0802 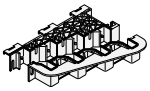	BA0400 BA0800 with adap. AD1066	BA1250	BA1600		1	TV4000 (W=390mm)			TV3201 (W=300mm)
					2	TV8001 (D=700mm)	TV8005 (D=700mm)	TV8101 (D=700mm)	TV6101 (D=500mm)
						TV1001 (D=900mm)	TV1005 (D=900mm)	TV1101 (D=900mm)	TV8101 (D=700mm)
									TV1101 (D=900mm)
Linear up to 800A PB0803 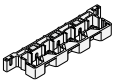	BA0400 BA0800				1	TV4001 (W=390mm)			
						TV6202 (W=600mm)			
						TV8202 (W=800mm)			
					3	TV6203 (W=600mm)			
						TV8203 (W=800mm)			
Linear up to 1600A PB1601 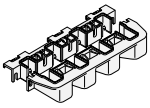	BA0400 BA0800 with adap. AD1066	BA1250	BA1600		1	TV4000 (W=390mm)	TV6201 (W=600mm)[1]		
						TV6201 (W=600mm)	TV8201 (W=800mm)[1]		
						TV8201 (W=800mm)			
					2	TV8001 (D=700mm)	TV8005 (D=700mm)	TV6101 (D=500mm)	TV6101 (D=500mm)
						TV1001 (D=900mm)	TV1005 (D=900mm)	TV8101 (D=700mm)	TV8101 (D=700mm)
								TV1101 (D=900mm)	TV1101 (D=900mm)
					4	TV8211 (D=700mm)	TV8211 (D=700mm)	TV8211 (D=700mm)	TV8211 (D=700mm)
						TV1211 (D=900mm)	TV1211 (D=900mm)	TV1211 (D=900mm)	TV1211 (D=900mm)
					5	TV4221 (W=390mm)	TV4221 (W=390mm)		
						TV6221 (W=600mm)	TV6221 (W=600mm)		
						TV8221 (W=800mm)	TV8221 (W=800mm)		
						TV8011 (D=700mm)	TV8011 (D=700mm)		
						TV1011 (D=900mm)	TV1011 (D=900mm)		

[1] Only form 2

> Selection by components page 5/53 > In-depth technical information page 6/1 > Overall dimensions page 7/1

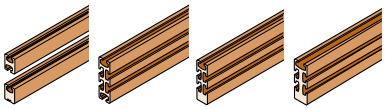

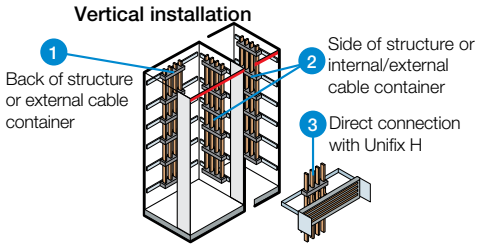

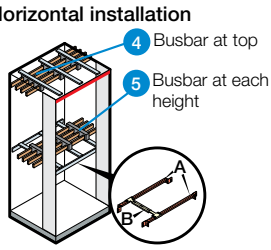

5

Busbar holder	Busbars with shaped section						Crosspieces for fixing to structure			
Type	In≤40÷800A	In=1250A	In=1600A	In=3200A	Installation		Switchgear without segregation	Segregated switchgear	Internal cable container	Additional cable container
Linear up to 1600A PB1603 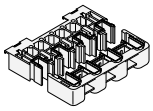	BA0400 BA0800 with adap. AD1066	BA1250	BA1600		1		TV4000 (W=390mm)	TV4000 (W=390mm[1])		
							TV6201 (W=600mm)	TV6201 (W=600mm[1])		
							TV8201 (W=800mm)	TV8201 (W=800mm[1])		
					2		TV6001 (D=500mm)	TV6005 (D=500mm)	TV5101 (D=300mm)	TV5101 (D=300mm)
							TV8001 (D=700mm)	TV8005 (D=700mm)	TV6101 (D=500mm)	TV6101 (D=500mm)
							TV1001 (D=900mm)	TV1005 (D=900mm)	TV8101 (D=700mm)	TV8101 (D=700mm)
					4		TV1261 (D=500mm)	TV1261 (D=500mm)	TV5101 (D=300mm)	TV5101 (D=300mm)
							TV8211 (D=700mm)	TV8211 (D=700mm)	TV1261 (D=500mm)	TV1261 (D=500mm)
							TV1211 (D=900mm)	TV1211 (D=900mm)	TV8211 (D=700mm)	TV8211 (D=700mm)
									TV1211 (D=900mm)	TV1211 (D=900mm)
					5	A	TV4221 (W=390mm)	TV4221 (W=390mm)		
							TV6221 (W=600mm)	TV6221 (W=600mm)		
							TV8221 (W=800mm)	TV8221 (W=800mm)		
						B	TV6011 (D=500mm)	TV6011 (D=500mm)		
							TV8011 (D=700mm)	TV8011 (D=700mm)		
							TV1011 (D=900mm)	TV1011 (D=900mm		
Linear up to 3200A PB3201 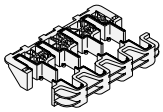				BA2000 1/2 busbar per phase	2		TV8001 (D=700mm)	TV8005 (D=700mm)	TV8101 (D=700mm)	TV8101 (D=700mm)
							TV1001 (D=900mm)	TV1005 (D=900mm)	TV1101 (D=900mm)	TV1101 (D=900mm)
					4		TV8211 (D=700mm)	TV8211 (D=700mm)	TV8211 (D=700mm)	TV8211 (D=700mm)
					5	A	TV6221 (W=600mm)	TV6221 (W=600mm)		
							TV8221 (W=800mm)	TV8221 (W=800mm)		
						B	TV8011 (D=700mm)	TV8011 (D=700mm)		
							TV1011 (D=900mm)	TV1011 (D=900mm)		

[1] Only form 2

> Selection by components page 5/53 > In-depth technical information page 6/1 > Overall dimensions page 7/1

ArTu K Modular Structures
Distribution system

Flat busbars for distribution up to 6300 A

Cross-section	In (A)	Code	No. busbar/ phase	Capacity (A) IP31	IP41	IP65	Icw max (kA)	Dimensions WxW (mm)	Lenght (mm)	Weight (kg)
	400	BR4005	1	530	490	400	35	32x5	1750	2,1
	630	BR6305	1	772	695	630	50	50x5	1750	3,4
	800	BR8005	1	951	863	800	50	63x5	1750	4,4
	1250	BR1250	1	1431	1347	1250	50	100x5	1750	2,25
	1600	BR1600	1	1836	1710	1600	105	100x10	1750	14,5
	2000	BR2000	1	2250	2110	2000	105	120x10	1750	18,7
	2500	BR1600	2	3056	2700	2500	105	100x10	1750	29
	3000	BR2000	2	3500	3200	3000	105	120x10	1750	37,4
	3200	BR1600	3	4018	3600	3200	105	100x10	1750	43,5
	4000	BR2000	3	4460	4250	4080	105	120x10	1750	56,1
	5000	BR2500	3	5280	5000	NO	105	160x10	1750	75
	6300	BR2010	3	6300	6000	NO	105	200x10	1750	93,5

> Selection by components page 5/53 > In-depth technical information page 6/1 > Overall dimensions page 7/1

Selection and assembly of flat busbars and busbar holders

Using the correct number of busbar holders ensures resistance to electrodynamic forces in the case of a short-circuit. Assess the maximum distance (max X) not to be exceeded between two consecutive busbar holders according to the max. I_{cc}.

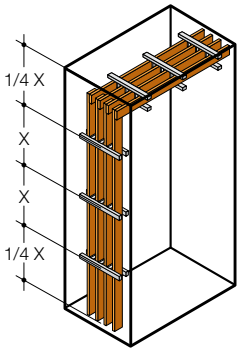

The distance between the first busbar holder and the end of the busbar must not exceed $^1/_4$ of "X".

5

			No. of busbar holders according to the max. I_{cc}										
Busbar	**Capacity**	**Busbar holder**	**No. busbars/type per phase**	**25 kA**	**X max (mm)**	**35 kA**	**X max (mm)**	**50 kA**	**X max (mm)**	**75 kA**	**X max (mm)**	**105 kA**	**X max (mm)**
BR4005	400A	BP1250	1	7	300	9	225	-	-	-	-	-	-
BR6305	630A	BP1250	1	6	375	7	275	9	225	-	-	-	-
BR8005	800A	BP1250	1	5	425	7	300	9	225	-	-	-	-
BR1250	1250A	BP1250	1	4	500	6	375	8	250	-	-	-	-
BR1600	1600A	BP1600	1	3	1000	3	1000	4	600	6	375	9	225
BR2000	2000A	BP1600	1	3	1000	3	1000	4	600	6	375	9	225
BR1600	2500A	BP2500	2 x BR1600	3	1000	3	1000	3	900	5	400	9	225
BR2000	3000A	BP2500	2 x BR2000	3	1000	3	1000	3	900	5	400	9	225
BR1600	3200A	BP3200	3 x BR1600	3	1000	3	1000	3	800	5	400	9	225
BR2000	4000A	BP3200	3 x BR2000	3	1000	3	1000	3	800	5	400	9	225
BR2500	5000A	BP1621	3 x BR2500	3	1000	3	1000	3	800	5	400	9	225
BR2010	6300A	BP1622	3 x BR2010	3	1000	3	1000	3	800	5	400	9	225

max X = maximum distance not to be exceeded between two consecutive busbar holders

> Selection by components page 5/53 > In-depth technical information page 6/1 > Overall dimensions page 7/1

ArTu K Modular Structures
Distribution system

Flat busbars for distribution up to 6300A

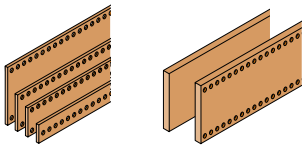

Vertical installation

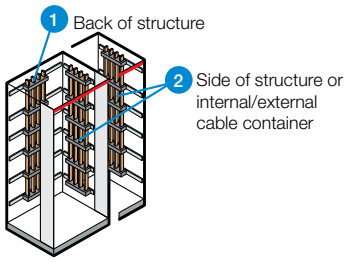

Horizontal installation

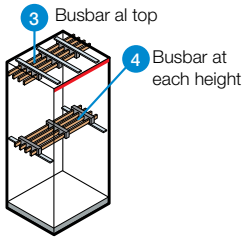

Selection and assembly of busbars and busbar holders

5

Busbar holder	Flat busbars			Crosspieces for fixing to structure			
Type	**In=400÷1250A**	**In=1600÷6300A**	**Installation**	**Switchgear without segregation**	**Segregated switchgear**	**Internal cable container**	**Additional cable container**
Linear up to 1600A BP1250A 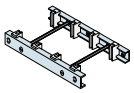	BR4005 BR6305 BR8005 BR1250 1 busbar per phase		1	TR7005 (W=600mm)	TR7005 (W=600mm)		
				TR8000 (W=800mm)	TR8000 (W=800mm)		
			2	TR6001 (D=500mm)	TR6005 (D=500mm)	TR6101 (D=500mm)	TR6101 (D=500mm)
				TR8001 (D=700mm)	TR8005 (D=700mm)	TR8101 (D=700mm)	TR8101 (D=700mm)
				TV1001 (D=900mm)	TV1005 (D=900mm)	TV1101 (D=900mm)	TV1101 (D=900mm)
			3	TV1261 (D=500mm)	TV1261 (D=500mm)	TV1261 (D=500mm)	TV1261 (D=500mm)
				TV8211 (D=700mm)	TV8211 (D=700mm)	TV8211 (D=700mm)	TV8211 (D=700mm)
				TV1211 (D=900mm)	TV1211 (D=900mm)	TV1211 (D=900mm)	TV1211 (D=900mm)
			4	TR6201 (D=500mm)	TR6205 (D=500mm)	TR6301 (D=500mm)	TR6301 (D=500mm)
				TR8201 (D=700mm)	TR8205 (D=700mm)	TR8301 (D=700mm)	TR8301 (D=700mm)
				TR1201 (D=900mm)	TR1205 (D=900mm)		
Linear up to 1600A/2000A BP1600 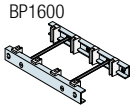		BR1600 BR2000 1 busbar per phase	1	TR7005 (W=600mm)	TR7005 (W=600mm)		
				TR8000 (W=800mm)	TR8000 (W=800mm)		
			2	TR6001 (D=500mm)	TR6005 (D=500mm)	TR6101 (D=500mm)	TR6101 (D=500mm)
				TR8001 (D=700mm)	TR8005 (D=700mm)	TR8101 (D=700mm)	TR8101 (D=700mm)
				TV1001 (D=900mm)	TV1005 (D=900mm)	TV1101 (D=900mm)	TV1101 (D=900mm)
			3	TV1261 (D=500mm)	TV1261 (D=500mm)	TV1261 (D=500mm)	TV1261 (D=500mm)
				TV8211 (D=700mm)	TV8211 (D=700mm)	TV8211 (D=700mm)	TV8211 (D=700mm)
				TV1211 (D=900mm)	TV1211 (D=900mm)	TV1211 (D=900mm)	TV1211 (D=900mm)
			4	TR6201 (D=500mm)	TR6205 (D=500mm)	TR6301 (D=500mm)	TR6301 (D=500mm)
				TR8201 (D=700mm)	TR8205 (D=700mm)	TR8301 (D=700mm)	TR8301 (D=700mm)
				TR1201 (D=900mm)	TR1205 (D=900mm)		
Linear up to 2500A/3000A BP2500 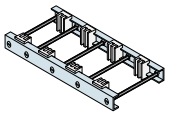		BR1600 BR2000 2 busbars per phase	1	TR7005 (W=600mm)	TR7005 (W=600mm)		
				TR8000 (W=800mm)	TR8000 (W=800mm)		
			2	TR8001 (D=700mm)	TR8005 (D=700mm)	TR8101 (D=700mm)	TR8101 (D=700mm)
				TV1001 (D=900mm)	TV1005 (D=900mm)	TV1101 (D=900mm)	TV1101 (D=900mm)
			3	TV8211 (D=700mm)	TV8211 (D=700mm)	TV8211(D=700mm)	TV8211(D=700mm)
				TV1211 (D=900mm)	TV1211 (D=900mm)	TV1211 (D=900mm)	TV1211 (D=900mm)
			4	TR8201 (D=700mm)	TR8205 (D=700mm)	TR8301 (D=700mm)	TR8301 (D=700mm)
				TR1201 (D=900mm)	TR1205 (D=900mm)		

> Selection by components page 5/53 > In-depth technical information page 6/1 > Overall dimensions page 7/1

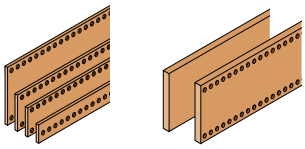

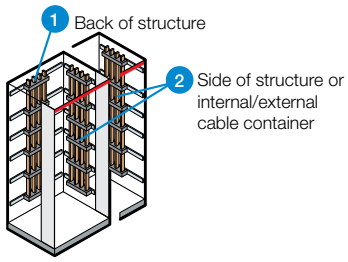

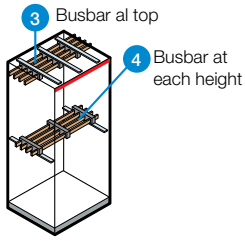

Selection of busbars holders and crosspieces

Busbars holders	Shaped busbars			Crosspieces for fixing to structure			
Type	**In=400÷1250A**	**In=1600÷6300A**	**Installation**	**Switchgear without segregation**	**Segregated switchgear**	**Internal cable container reduced frames**	**Additional cable container**
Linear up to 3200A BP3200 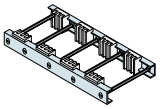		BR1600 3 busbars per phase	1	TR7005 (W=600mm)	TR7005 (W=600mm)		
				TR8000 (W=800mm)	TR8000 (W=800mm)		
			2	TR8001 (D=700mm)	TR8005 (D=700mm)	TR8101 (D=700mm)	TR8101 (D=700mm)
				TV1001 (D=900mm)	TV1005 (D=900mm)	TV1101 (D=900mm)	TV1101 (D=900mm)
			3	TV8211 (D=700mm)	TV8211 (D=700mm)	TV8211(D=700mm)	TV8211(D=700mm)
				TV1211 (D=900mm	TV1211 (D=900mm	TV1211 (D=900mm	TV1211 (D=900mm
			4	TR8201 (D=700mm)	TR8205 (D=700mm)	TR8301 (D=700mm)	TR8301 (D=700mm)
				TR1201 (D=900mm)	TR1205 (D=900mm)		
Linear up to 4000A BP3200 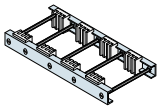 BR2000 not drilled		BR2000 3 busbars per phase	1	TR8000 (W=800mm)	TR8000 (W=800mm)		
			2	TV1001 (D=900mm)	TV1005 (D=900mm)	TV1101 (D=900mm)	TV1101 (D=900mm)
			3	TV1311 (D=900mm)	TV1311 (D=900mm)	TV1311 (D=900mm)	TV1311 (D=900mm)
			4	TR1201 (D=900mm)	TR1205 (D=900mm)		
Linear up to 5000A BP1621 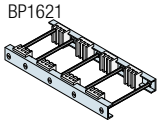 BR2500 not drilled		BR2500 3 busbars per phase	2	TV2630 (D=900mm)	TV2631 (D=900mm)	TV2632 (D=900mm)	TV2632 (D=900mm)
			3	TV2633 (D=900mm)	TV2633 (D=900mm)	TV2633 (D=900mm)	TV2633 (D=900mm)
			4	TV2634 (D=900mm)	TV2635 (D=900mm)		
Linear up to 6300A BP1622 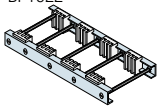 BR2010 not drilled		BR2010 3 busbars per phase	2	TV2630 (D=900mm)	TV2631 (D=900mm)	TV2632 (D=900mm)	TV2632 (D=900mm)
			3	TV2633 (D=900mm)	TV2633 (D=900mm)	TV2633 (D=900mm)	TV2633 (D=900mm)
			4	TV2634 (D=900mm)	TV2635 (D=900mm)		

> Selection by components page 5/53 > In-depth technical information page 6/1 > Overall dimensions page 7/1

ArTu K Modular Structures
Distribution system

Unifix systems

Technical characteristics		Unifix H	Unifix L
Rated service voltage (U_e)		690V AC	400V AC
Rated insulation voltage (U_i)		1000V AC	500V AC
Rated impulse withstand voltage (U_{imp})		8kV	6kV
Rated frequency		50/60Hz	50/60Hz
Rated current (I_n)	central power supply	400A	100A
	lateral power supply	320A	80A
Rated short-time withstand current (I_{cw})		25kA	
Maximum peak current (I_{pk})		52,5kA-400V	
Maximum installable circuit-breaker size		250A	100A
Conditioned short-circuit current (Icc)	Tmax T1	36kA-400V	
	Tmax T2 N, S [1]	50kA-400V	
	Tmax T3	50kA-400V	
	Tmax XT1	50kA-400V	
	Tmax XT3	50kA-400V	
With circuit-breaker	S200		6kA-400V
	S200M		10kA-400V
	S200P		25kA-400V
Degree of protection		IP20 with accessory	IP20
Characteristics of the insulating material		Self-extinguishing thermoplastic V1 (UL94)	Self-extinguishing thermoplastic V1 (UL94)
Characteristics of the conductor material		Electrolytic copper	Electrolytic copper
Width (No. modules/mm)		24/600 36/800	12/400 24/600 36/800

Installation of Unifix system			
Frame for Tmax T and Tmax XT series	300x600mm (HxW)	ED2183	
	300x800mm (HxW)	ED2191	
Fixing brackets H=300mm		AD1061	
Crosspiece for direct connection to the rear busbars with shaped section with PB0803	W=600mm	TV6202[2]	
		TV6203	
	W=800mm	TV8203	
Busbar 2P	12 mod.		ED2993
	18 mod.		ED3009
	24 mod.		ED3017
	36 mod.		ED3025
Busbar 4P	12 mod.		ED2944
	18 mod.		ED2951
	24 mod.		ED2969
	36 mod.		ED2977
Fixing support	12 mod.		GD4002
	24 mod.		GD6002
	36 mod.		GD8002

[1] Select circuit-breakers in version with front terminals for copper cables.

[2] ArTu D=150mm.

> Selection by components page 5/53 > In-depth technical information page 6/1 > Overall dimensions page 7/1

Unifix systems

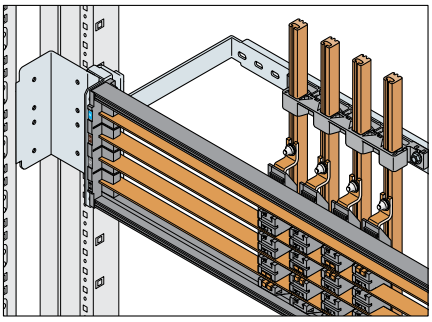

Direct connection with the 400/800A system of busbars with shaped section.

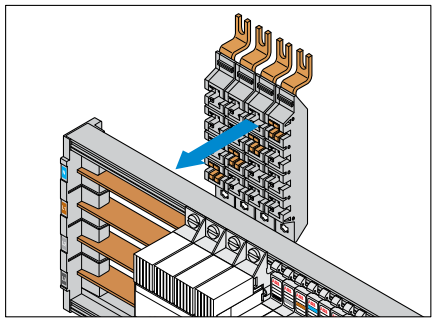

Feeder module for 400A frame (L1-L2-L3-N).

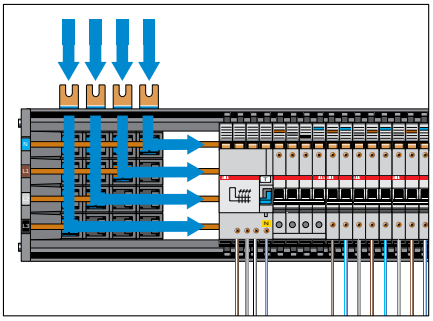

Direct power supply of the bases by means of feeder module ED2209.

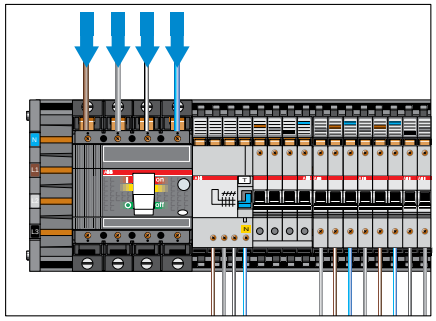

Power supply by means of general row circuit-breaker.

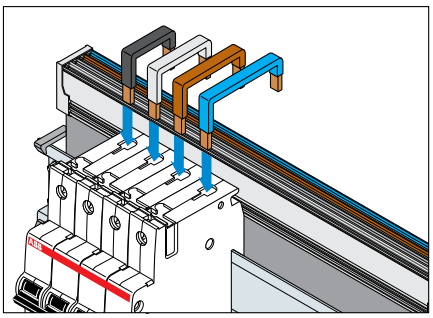

Connections (L1-L2-L3-N) for System Pro *M* modular apparatus.

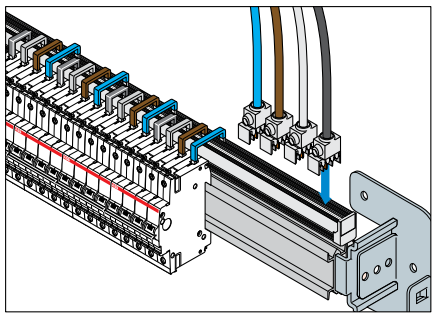

Power supply of the busbar with 100A feeder module without cable. Terminal capacity 35mm^2.

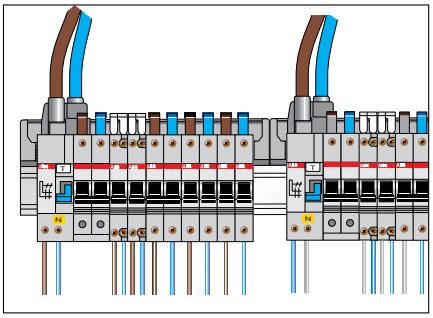

Direct power supply of the busbars by means of feeder module.

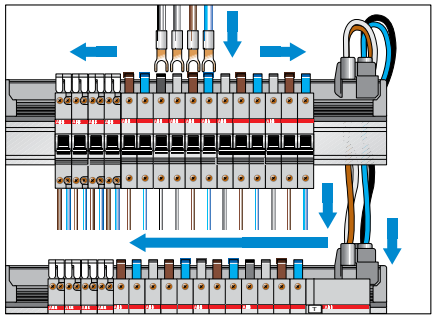

Power supply by means of modules and cables in parallel.

> Selection by components page 5/53 > In-depth technical information page 6/1 > Overall dimensions page 7/1

ArTu K Modular Structures
Distribution system

Unifix systems

Table for selecting connections according to the circuit-breaker

Circuit-breaker series		Unifix H		Unifix L
SN201		(top power supply)		
DS941		**ED2654** L1/N 40A		**ED3272** L1/N 40A
		ED2662 L2/N 40A		**ED3280** L2/N 40A
		ED2670 L3/N 40A		**ED3298** L3/N 40A
S200 - DS200		(top power supply)	(bottom power supply)	
F200 up to 63A (Unifix L)		**ED2531** L1 63A	**ED2572** L1 63A	**ED3033** L1 100A
		ED2549 L2 63A	**ED2590** L2 63A	**ED3041** L2 100A
		ED2556 L3 63A	**ED2598** L3 63A	**ED3058** L3 100A
		ED2564 N 63A	**ED2606** N 63A	**ED3066** N 100A
		ED2845 False pole module		
S800		(top power supply)		
		ED2557 L1 ≤32A		
		ED2558 L2 ≤32A		
		ED2559 L3 ≤32A		
		ED2560 N ≤32A		
		ED2551 L1 125A		
		ED2552 L2 125A		
		ED2553 L3 125A		
		ED2554 N 125A		
		ED2550 False pole module		
S280 (80-100A)		(top power supply)		
E200 up to 100A - RS370 - F200 80/100A (Unifix H)		**ED2720** L1 100A		**ED3132** pow. supply L1/L2/L3/N - 350mm
		ED2738 L2 100A		**ED0026** pow. supply L1/L2/L3/N - 1500mm
		ED2746 L3 100A		**ED0025** pow. supply L1/L2/L3/N - 2500mm
		ED2753 N 100A		
MDRC - Various apparatus		(top power supply)	(low power supply)	
		ED2894 L1/N 16A	**ED2910** L1/N 16A	**ED3108** pow. supply 2 cables L1/N 16A
		ED2902 L1/L2 16A	**ED2928** L1/L2 16A	**ED3116** pow. supply 3 cables L1/L2/L3 16A
				ED3124 pow. supply 4 cables L1/L2/L3/N 16A
				ED3355 pow. supply 2 cables L1/N 40A
				ED3363 pow. supply 3 cables L1/L2/L3 40A
				ED3371 pow. supply 4 cables L1/L2/L3/N 71A
Tmax T1	Circuit-breaker	(top/bottom power supply)		
Tmax XT1		**ED2217** L1 Top/L2 Bottom		
		ED2225 L2 Top/L1 Bottom		
		ED2233 L3 Top/N Bottom		
		ED2241 N Top/L3 Bottom		
	Residual current	**ED2373** False pole module		
	Selenoid operator	**ED2381** False pole module		
Tmax T2	Circuit-breaker	(top/bottom power supply)		
		ED2258 L1 Top/L2 Bottom		
		ED2266 L2 Top/L1 Bottom		
		ED2274 L3 Top/N Bottom		
		ED2282 N Top/L3 Bottom		
	Residual current	**ED2373** False pole module		
	Selenoid operator	**ED2399** False pole module		
Tmax T3	Circuit-breaker	(top power supply)	(bottom power supply)	
Tmax XT3		**ED2290** L1	**ED2332** L1	
		ED2308 L2	**ED2340** L2	
		ED2316 L3	**ED2357** L3	
		ED2324 N	**ED2365** N	
	Residual current	**ED2373** False pole module		

For the DDA locks, order the false module ED2845 codes separately according to the size of the residual current lock.

If mounting XT1-XT3 on Unifix H, the polished flanges AD3301, AD3302, AD3303, AD3304 must also be ordered, see spare parts page 5/107.

> Selection by components page 5/53 > In-depth technical information page 6/1 > Overall dimensions page 7/1

ArTu K Modular Structures
Ordering codes

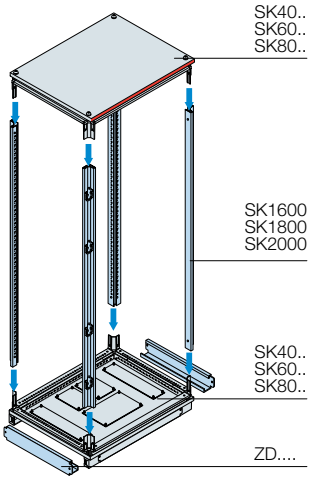

STRUCTURES WITHOUT SEGREGATION/SEGREGATED
Structure
Base-Top-Base strip

Preassembled structure complete with cable input flange, base strip angle pieces and front flanges – the lateral ones must be ordered separately.

Description	Dimensions (mm) D	Code			Package/ No. of pieces
12 DIN mod - W=390mm					
Base-Top-Base strip	225	SK4040			1/1
Base-Top-Base strip	300	SK4050			1/1
Base-Top-Base strip	500	SK4060			1/1
Base-Top-Base strip	700	SK4080			1/1
Base-Top-Base strip	900	SK4010			1/1
24 DIN mod - W=600mm					
Base-Top-Base strip	150	SK6025			1/1
Base-Top-Base strip	225	SK6040			1/1
Base-Top-Base strip	300	SK6050			1/1
Base-Top-Base strip	500	SK6060			1/1
Base-Top-Base strip	700	SK6080			1/1
Base-Top-Base strip	900	SK6010			1/1
24 DIN mod - W=800mm					
Base-Top-Base strip	150	SK8025			1/1
Base-Top-Base strip	225	SK8040			1/1
Base-Top-Base strip	300	SK8050			1/1
Base-Top-Base strip	500	SK8060			1/1
Base-Top-Base strip	700	SK8080			1/1
Base-Top-Base strip	900	SK8010			1/1
24 DIN mod - W=1000mm					
Base-Top-Base strip	900	SK1010			1/1

Uprights

Description	Dimensions (mm) H	Code			Package/ No. of pieces
No. 4 uprights	1600	SK1600			1/4
No. 4 uprights	1800	SK1800			1/4
No. 4 uprights	2000	SK2000			1/4

Base strip lateral flanges

Description	Dimensions (mm) D	Code			Package/ No. of pieces
No.2 base strip lateral flanges	150	ZD1015			1/2
No.2 base strip lateral flanges	225	ZD1025			1/2
No.2 base strip lateral flanges	300	ZD1030			1/2
No.2 base strip lateral flanges	500	ZD1050			1/2
No.2 base strip lateral flanges	700	ZD1070			1/2
No.2 base strip lateral flanges	900	ZD1090			1/2

> Selection by components page 5/53 > In-depth technical information page 6/1 > Overall dimensions page 7/1

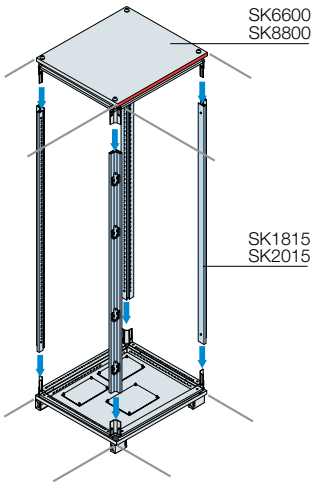

STRUCTURES WITHOUT SEGREGATION/SEGREGATED
Structure

Base-Top-Base strip for corner switchgear

Description	Dimensions (mm) W	W	Code			Package/ No. of pieces
Corner base-Top-Base strip	500	500	SK6600			1/1
Corner base-Top-Base strip	700	700	SK8800			1/1
Corner base-Top-Base strip	900	900	SK1100			1/1

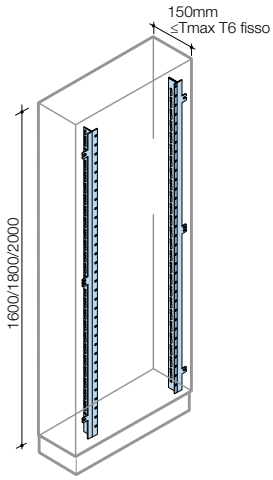

Uprights for corner switchgears

Description	Dimensions (mm) H	Code			Package/ No. of pieces
No. 4 corner uprights	1800	SK1815			1/4
No. 4 corner uprights	2000	SK2015			1/4

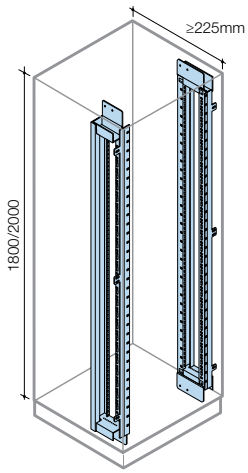

Functional frames for switchgear without segregation (open frame)

Allow the circuit-breaker door kit to be mounted in the combinations shown in the table.

Description	Dimensions (mm) H	Code			Package/ No. of pieces
Reduced frame					
No.2 functional frames	1600	SK1604			1/2
No.2 functional frames	1800	SK1804			1/2
No.2 functional frames	2000	SK2004			1/2
Standard frame					
No.2 standard frame	1800	SK1803			1/2
No.2 standard frame	2000	SK2003			1/2

To make structures with internal cable container (switchgear W=800mm) the functional frame is already included in the internal cable container kit (see page 5/61).

		Type of frame	Horiz busbars	Switchgear depth [mm] 150	225	300	500	700	900	Maximum circuit-breaker installable
Moulded-case circuit-breakers	Fixed	Reduced	no	≤T6	≤T6					
			yes			≤T6	≤T6	≤T6	≤T6	
		Standard	no		≤T6	≤T7				
			yes				≤T7	≤T7	≤T7	
			yes				≤T7	≤T7	≤T7	
	Withdrawable		yes				≤T7	≤T7	≤T7	
	With accessor.		yes				≤T7	≤T7	≤T7	
Air circuit breakers	Fixed		no			X1				
			yes				X1	X1	X1	
	Fixed/withdr.		yes					≤E3	≤E4	

> Rapid selection table page 5/6 > In-depth technical information page 6/1 > Overall dimensions page 7/1

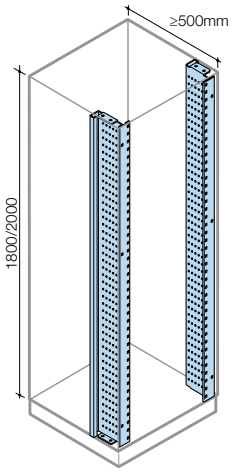

STRUCTURES WITHOUT SEGREGATION/SEGREGATED
Structure

Functional frames for segregated switchgear (closed frame)

Description	Dimensions (mm) H	Code			Package/ No. of pieces
No.2 segregated functional frames	1800	SK1802			1/2
No.2 segregated functional frames	2000	SK2003			1/2

To make structures with internal cable container (switchgear W=800mm), the functional frame is already included in the kit for internal cable container (see page 5/61).

IP65 Side panels

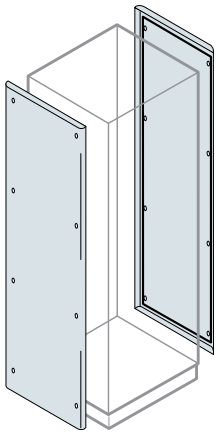

Description	Dimensions (mm) D	Code			Package/ No. of pieces
H=1600mm					
No.2 side panels IP65	150	LF1626			1/2
H=1800mm					
No.2 side panels IP65	150	LF1826			1/2
No.2 side panels IP65	225	LF1840			1/2
No.2 side panels IP65	300	LF1850			1/2
No.2 side panels IP65	500	LF1860			1/2
No.2 side panels IP65	700	LF1880			1/2
No.2 side panels IP65	900	LF1810			1/2
H=2000mm					
No.2 side panels IP65	150	LF2026			1/2
No.2 side panels IP65	225	LF2040			1/2
No.2 side panels IP65	300	LF2050			1/2
No.2 side panels IP65	500	LF2060			1/2
No.2 side panels IP65	700	LF2080			1/2
No.2 side panels IP65	900	LF2010			1/2

IP41 Ventilated side panels

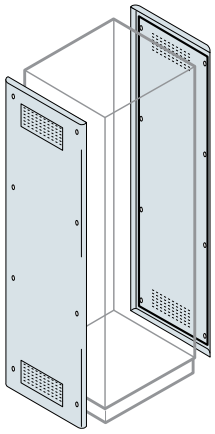

Description	Dimensions (mm) D	Aeration surface entry side (1) (cm^2)	Code			Package/ No. of pieces
H=1800mm						
No.2 ventilated side panels IP41	500	75	LA1860			1/2
No.2 ventilated side panels IP41	700	113	LA1880			1/2
No2 ventilated side panels IP41	900	170	LA1810			1/2
H=2000mm						
No.2 ventilated side panels IP41	500	75	LA2060			1/2
No.2 ventilated side panels IP41	700	113	LA2080			1/2
No.2 ventilated side panels IP41	900	170	LA2010			1/2

(1) Valid for 1 panel.

> Rapid selection table page 5/6 > In-depth technical information page 6/1 > Overall dimensions page 7/1

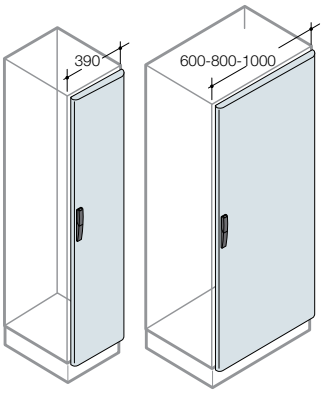

PV1841-PO2041

PO1661-PO1861
PO2061-PO1681
PO1881-PO2081
PO1811-PO2011

STRUCTURES WITHOUT SEGREGATION/SEGREGATED

Structure

IP65 Front or rear blind doors IP65

12/24/36/48 mod. blind doors

Door made of 15/10 thick steel sheet fitted with polyurethane gasket complete with handle with key with double tab. Reversible, can be hinged on the right or left.

Description	Dimensions (mm) W	H	Code			Package/ No. of pieces
12 DIN mod.						
Blind door IP65	390	1800	PO1841			1/1
Blind door IP65	390	2000	PO2041			1/1
24 DIN mod.						
Blind door IP65	600	1600	PO1661			1/1
Blind door IP65	600	1800	PO1861			1/1
Blind door IP65	600	2000	PO2061			1/1
36 DIN mod.						
Blind door IP65	800	1600	PO1681			1/1
Blind door IP65	800	1800	PO1881			1/1
Blind door IP65	800	2000	PO2081			1/1
48 DIN mod.						
Blind door IP65	1000	1800	PO1811			1/1
Blind door IP65	1000	2000	PO2011			1/1

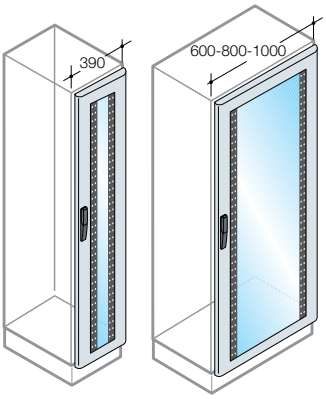

PV1841-PV2041

PV1661-PV1861
PV2061-PV1682
PV1882-PV2082
PV1811-PV2011

IP65 Front or rear glass doors

Glass doors 12/24/36 mod.

Door made of 15/10 thick steel sheet with 4 mm thick safety glass fitted with polyurethane gasket complete with handle with key with double tab. Reversible, can be hinged on the right or left.

Description	Dimensions (mm) W	H	Code			Package/ No. of pieces
12 DIN mod.						
Glass door IP65	390	1800	PV1841			1/1
Glass door IP65	390	2000	PV2041			1/1
24 DIN mod.						
Glass door IP65	600	1600	PV1661			1/1
Glass door IP65	600	1800	PV1861			1/1
Glass door IP65	600	2000	PV2061			1/1
36 DIN mod.						
Glass door IP65	800	1600	PV1682			1/1
Glass door IP65	800	1800	PV1882			1/1
Glass door IP65	800	2000	PV2082			1/1
36 DIN mod. + internal cablr container (Only for structures W=800mm consisting of 24 mod. + internal cable container).						
Glass door IP65 + cale cont.	800	1600	PV1681			1/1
Glass door IP65 + cale cont.	800	1800	PV1881			1/1
Glass door IP65 + cale cont.	800	2000	PV2081			1/1
48 DIN mod.						
Glass door IP65	1000	1800	PV1811			1/1
Glass door IP65	1000	2000	PV2011			1/1
48 DIN mod. + internal cablr container (Only for structures W=1000mm consisting of 48 mod. + internal cable container).						
Glass door IP65 + cale cont.	1000	1800	PV1812			1/1
Glass door IP65 + cale cont.	1000	2000	PV2012			1/1

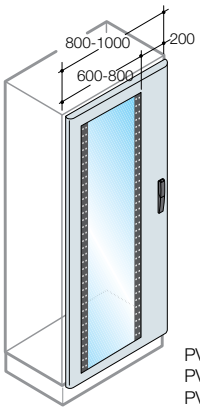

PV1681-PV1881
PV2081-PV1812
PV2012

> Rapid selection table page 5/6 > In-depth technical information page 6/1 > Overall dimensions page 7/1

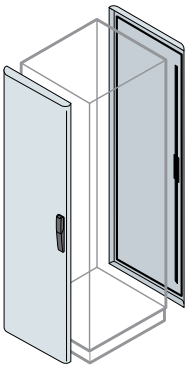

STRUCTURES WITHOUT SEGREGATION/SEGREGATED

Structure

IP65 Blind side doors

Description	Dimensions (mm) D	Code			Package/ No. of pieces
H=1800mm					
No.2 side doors IP65	225	LI1840			1/2
No.2 side doors IP65	500	LI1860			1/2
No.2 side doors IP65	700	LI1880			1/2
H=2000mm					
No.2 side doors IP65	225	LI2040			1/2
No.2 side doors IP65	500	LI2060			1/2
No.2 side doors IP65	700	LI2080			1/2

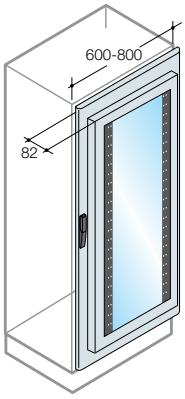

IP65 Front extending glass doors

Description	Dimensions (mm) W	H	Code			Package/ No. of pieces
24 DIN mod.						
External extending glass door IP65	600	1800	PV1863			1/1
External extending glass door IP65	600	2000	PV2063			1/1
36 DIN mod.						
External extending glass door IP65	800	1800	PV1883			1/1
External extending glass door IP65	800	2000	PV2083			1/1

> Rapid selection table page 5/6 > In-depth technical information page 6/1 > Overall dimensions page 7/1

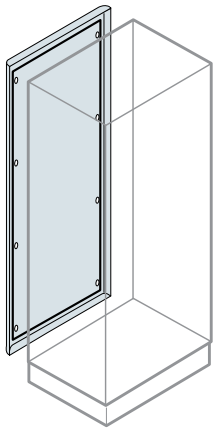

STRUCTURES WITHOUT SEGREGATION/SEGREGATED
Structure

IP65 Rear panels

Description	Dimensions (mm) W	H	Code			Package/ No. of pieces
12 DIN mod.						
Rear panel IP65	390	1800	RF1840			1/1
Rear panel IP65	390	2000	RF2040			1/1
24 DIN mod.						
Rear panel IP65	600	1600	RF1660			1/1
Rear panel IP65	600	1800	RF1860			1/1
Rear panel IP65	600	2000	RF2060			1/1
36 DIN mod.						
Rear panel IP65	800	1600	RF1680			1/1
Rear panel IP65	800	1800	RF1880			1/1
Rear panel IP65	800	2000	RF2080			1/1
48 DIN mod.						
Rear panel IP65	1000	1800	RF1810			1/1
Rear panel IP65	1000	2000	RF2010			1/1

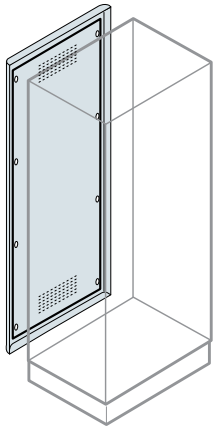

Rear ventilatd panels

Description	Dimensions (mm) W	H	Code			Package/ No. of pieces
24 DIN mod.						
Ventilated rear panel	600	1800	RA1860			1/1
Ventilated rear panel	600	2000	RA2060			1/1
36 DIN mod.						
Ventilated rear panel	800	1800	RA1880			1/1
Ventilated rear panel	800	2000	RA2080			1/1
48 DIN mod.						
Ventilated rear panel	1000	1800	RA1810			1/1
Ventilated rear panel	1000	2000	RA2010			1/1

> Rapid selection table page 5/6 > In-depth technical information page 6/1 > Overall dimensions page 7/1

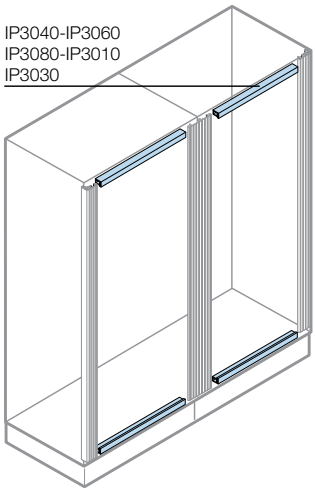

STRUCTURES WITHOUT SEGREGATION/SEGREGATED
Structure

IP 31 Finishing section

For IP31 version switchgear (without door), use the special finishing kits already sized for the standard heights and widths of ArTu switchgear. In the case of switchgear placed side by side, use the special double IP31 kit on the joining uprights.

Horizontal section

Description	Dimensions (mm) W	Code			Package/ No. of pieces
12 DIN mod.					
No.2 IP31 horizontal finishing sections	390	IP3040			1/2
24 DIN mod.					
No.2 IP31 horizontal finishing sections	600	IP3060			1/2
36 DIN mod.					
No.2 IP31 horizontal finishing sections	800	IP3080			1/2
48 DIN mod.					
No.2 IP31 horizontal finishing sections	1000	IP3010			1/2
External cable container W=300mm					
No.2 IP31 horizontal finishing sections	300	IP3030			1/2

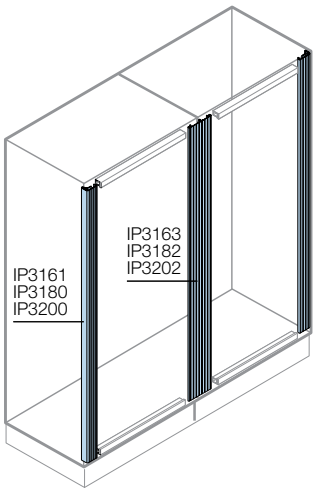

Vertical section

Description	Dimensions (mm) H	Code			Package/ No. of pieces
No.2 IP31 vertical finishing sections	1600	IP3161			1/2
No.2 IP31 vertical finishing sections	1800	IP3180			1/2
No.2 IP31 vertical finishing sections	2000	IP3200			1/2
Double vertical finishing profile IP31 for side-by-side switchgear	1600	IP3163			1/2
Double vertical finishing profile IP31 for side-by-side switchgear	1800	IP3182			1/2
Double vertical finishing profile IP31 for side-by-side switchgear	2000	IP3202			1/2

> Rapid selection table page 5/6 > In-depth technical information page 6/1 > Overall dimensions page 7/1

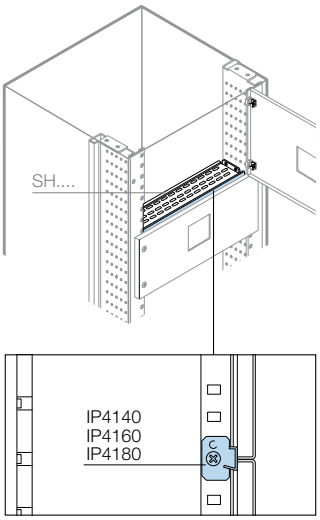

STRUCTURES WITHOUT SEGREGATION/SEGREGATED

Structure

Kit IP41

Not segregated structures

Description	Dimensions (mm) W	Code			Package/ No. of pieces
12 DIN mod.					
No.4 IP41 horizontal kits for not segregated structures	390	IP4140			1/4
24 DIN mod.					
No.4 IP41 horizontal kits for not segregated structures	600	IP4160			1/4
36 DIN mod.					
No.4 IP41 horizontal kits for not segregated structures	800	IP4180			1/4

Segregated structures[1]

Description	Dimensions (mm) W	Code			Package/ No. of pieces
12 DIN mod.					
No.4 IP41 horizontal kits for segregated structures	390	IP4141			1/4
24 DIN mod.					
No.4 IP41 horizontal kits for segregated structures	600	IP4161			1/4
36 DIN mod.					
No.4 IP41 horizontal kits for segregated structures	800	IP4181			1/4

[1] To complete with universal segregation SH 4000, SH 6000, SH 8000 (see page 5/86).

> Rapid selection table page 5/6 > In-depth technical information page 6/1 > Overall dimensions page 7/1

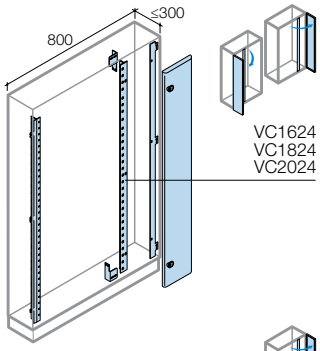

STRUCTURES WITHOUT SEGREGATION/SEGREGATED
Structure

Internal cable container for switchgear without segregation (opern frame)

Only to be ordered for the 36 DIN mod. structures (W=800mm). Consisting of a pair of functional uprights and a blind door complete with two key locks. Can be mounted either on the right or left.

Description	Dimensions (mm) H	W	Code			Package/ No. of pieces
Reduced framed for structures P≤300mm						
Not segregated internal cable container	1600	200	VC1624			1/1
Not segregated internal cable container	1800	200	VC1824			1/1
Not segregated internal cable container	2000	200	VC2024			1/1
Standard framed for structures P≤300mm						
Not segregated internal cable container	1800	200	VC1823			1/1
Not segregated internal cable container	2000	200	VC2023			1/1

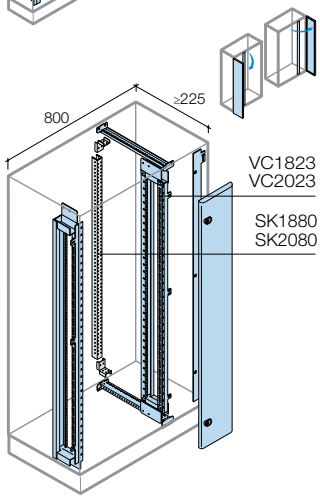

Rear riser for unsegregated internal cable container

Kit consisting of 2 unsegregated functional frames and one blind door. The rear riser SK1880 (H=1800mm) and SK2080 (H=2000mm) in the unsegregated structures must be ordered separately if needed for fixing onto the rear of crosspieces, accessories, busbars, etc.

Description	Dimensions (mm) H	Code			Package/ No. of pieces
Internal cable container rear riser	1800	SK1880			1/1
Internal cable container rear riser	2000	SK2080			1/1

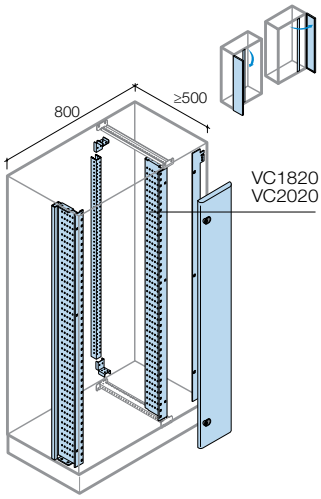

Internal cable container for segregated switchgear (closed frame)

Only to be ordered for the W=800mm structures. Kit consisting of 2 functional segregated frames, a blind door and a rear upright for fixing onto the back of crosspieces, accessories, busbars, etc. Can be mounted either on the right or left.

Description	Dimensions (mm) H	W	Code			Package/ No. of pieces
Internal cable container for segregated switchgear D≥500mm						
Segregated cable container	1800	200	VC1820			1/1
Segregated cable container	2000	200	VC2020			1/1

> Rapid selection table page 5/6 > In-depth technical information page 6/1 > Overall dimensions page 7/1

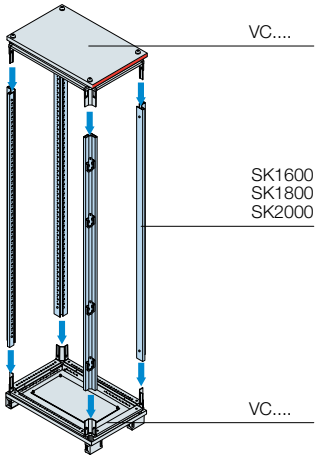

STRUCTURES WITHOUT SEGREGATION/SEGREGATED

Structure

Base-Header-Plinth for external cable container

Pre-mounted structure complete with cable entry flanges, plinth channels and front flanges – the lateral ones must be ordered separately.

Description	Dimensions (mm) D	W	Code			Package/ No. of pieces
Base, top and base strip for external cable container	150	300	VC3025			1/1
Base, top and base strip for external cable container	225	300	VC3040			1/1
Base, top and base strip for external cable container	300	300	VC3050			1/1
Base, top and base strip for external cable container	500	300	VC3060			1/1
Base, top and base strip for external cable container	700	300	VC3080			1/1
Base, top and base strip for external cable container	900	300	VC3010			1/1

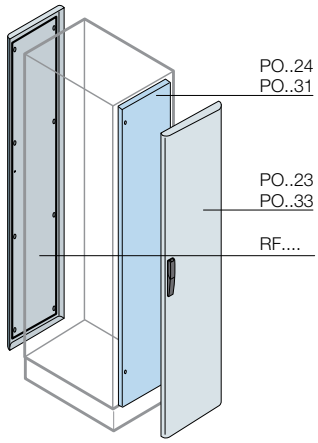

Front and rear coverings for additional cable container

The additional cable container can be completed in the following ways:
- IP65 version with external door (internal optional)
- IP31 version with internal door and finishing section (see table on page 5/58).

IP31 Internal door

Description	Dimensions (mm) H	W	Code			Package/ No. of pieces
Internal door for cable container	1600	300	PO1631			1/1
Internal door for cable container	1800	300	PO1831			1/1
Internal door for cable container	2000	300	PO2031			1/1

IP65 External door

Description	Dimensions (mm) H	W	Code			Package/ No. of pieces
External door for cable container	1600	300	PO1633			1/1
External door for cable container	1800	300	PO1833			1/1
External door for cable container	2000	300	PO2033			1/1

IP65 Rear panel

Description	Dimensions (mm) H	W	Code			Package/ No. of pieces
Rear panel for external cable container	1600	300	RF1630			1/1
Rear panel for external cable container	1800	300	RF1830			1/1
Rear panel for external cable container	2000	300	RF2030			1/1

> Rapid selection table page 5/6 > In-depth technical information page 6/1 > Overall dimensions page 7/1

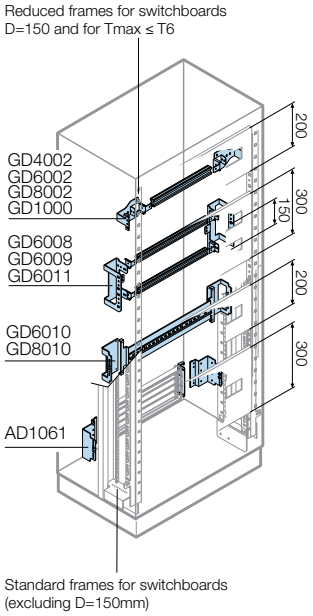

STRUCTURES WITHOUT SEGREGATION/SEGREGATED

Kit for apparatus

DIN rail kits for System Pro-M modular, Tmax T1- T2-T3, moulded-case circuit-breakers and support for Unifix H

DIN rail kit

Description	Dimensions (mm) W	Code			Package/ No. of pieces
12 DIN mod. - W=390mm					
DIN rail kit (aluminium)	390	GD4002			1/1
DIN rail kit interaxis 150mm (2 DIN rows)		GD6011			1/1
24 DIN mod. - W=600mm					
DIN rail kit (aluminium)	600	GD6002			1/1
DIN rail kit interaxis 150mm (2 DIN rows)		GD6008			1/1
DIN rail kit reinforced for Tmax RC		GD6010			1/1
DIN rail kit with accessories		GC6002 (1)			1/1
36 DIN mod. - W=800mm					
DIN rail kit (aluminium)	800	GD8002			1/1
DIN rail kit interaxis 150mm (2 DIN rows)		GD6009			1/1
DIN rail kit reinforced for Tmax RC		GD8010			1/1
DIN rail kit with accessories		GC8002 (1)			1/1
48 DIN mod. - W=1000mm					
DIN rail kit (aluminium)	1000	GD1000			1/1

(1) The DIN rail Kit with accessories includes the 60x80 wiring duct and relative fixing supports AD1037.

Supports for Unifix H

Description	Dimensions (mm) H	Code			Package/ No. of pieces
Fixing supports for Unifix H series for panel H=300mm	600/800	AD1061			1/1

> Rapid selection table page 5/6 > In-depth technical information page 6/1 > Overall dimensions page 7/1

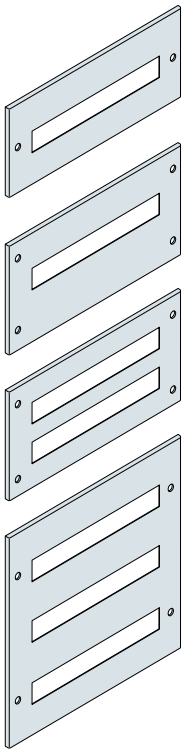

STRUCTURES WITHOUT SEGREGATION/SEGREGATED

Kit for apparatus

Modular panel

Steel sheet panels complete with hinges placed on the right or left

Description	Dimensions (mm) H	W	Code			Package/ No. of pieces
12 DIN mod.						
Modular panel 1 DIN row	200	390	PM2424			1/1
Modular panel 2 DIN rows	300		PM3424			1/1
24 DIN mod.						
Modular panel 1 DIN row	200	600	PM2624			1/1
Modular panel 1 DIN row - Tmax RC	300		PM2312			1/1
Modular panel 1 DIN row only for Unifix H	300		PM3624			1/1
Modular panel 2 DIN rows interaxis 150mm	300		PM3648			1/1
Modular panel 3 DIN rows	600		PM6672			1/1
36 DIN mod.						
Modular panel 1 DIN row	200	800	PM2836			1/1
Modular panel 1 DIN row - Tmax RC	300		PM2315			1/1
Modular panel 1 DIN row only for Unifix H	300		PM3836			1/1
Pannello modulare 2 file DIN	300		PM3872			1/1
48 DIN mod.						
Modular panel 1 DIN row	200	1000	PM2010			1/1

Width 600/800/1000mm

PM3648/PM3872

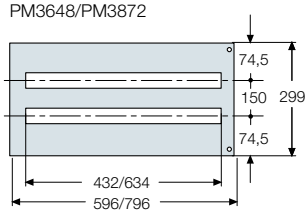

PM2624/PM2836/PM2010

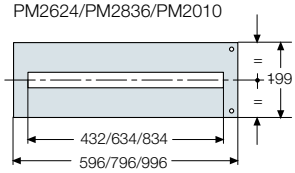

Version for Tmax with mod. diff.

PM2312/PM2315

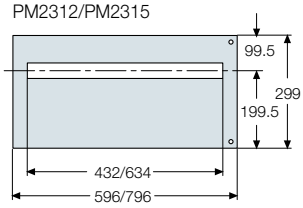

Version for Unifix H

PM3624/PM3836

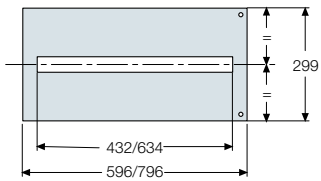

Width 600mm

PM6672

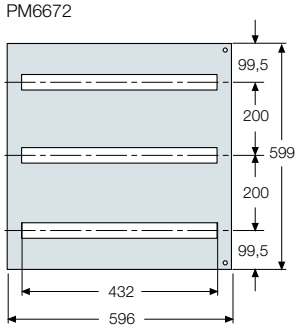

> Rapid selection table page 5/6 > In-depth technical information page 6/1 > Overall dimensions page 7/1

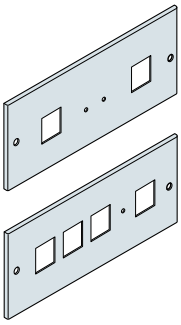

STRUCTURES WITHOUT SEGREGATION/SEGREGATED

Kit for apparatus

Panels for square measuring instruments

Steel sheet panels complete with hinges placed on the right or left.

Description	Dimensions (mm) H	W	Code			Package/ No. of pieces
24 DIN mod - W=600mm						
Panel for 2 instruments 72x72mm	200	600	PS2720			1/1
Panel for 2 instruments 72x72mm			PS2960			1/1
Panel for 4 instruments 72x72mm			PS4720			1/1
Panel for 4 instruments 96x96mm			PS4960			1/1
36 DIN mod - W=800mm						
Panel for 2 instruments 72x72mm	200	800	PS2728			1/1
Panel for 2 instruments 72x72mm			PS2968			1/1
Panel for 4 instruments 72x72mm			PS4728			1/1
Panel for 4 instruments 96x96mm			PS4968			1/1
48 DIN mod. - L=1000mm						
Panel for 4 instruments 72x72mm	200	1000	PS2017			1/1
Panel for 4 instruments 96x96mm			PS2019			1/1

5

Leght 600/800/1000mm

PS4720/PS4728/PS4960/PS4968/ PS2017/PS2019

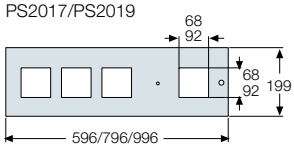

PS2720/PS2728/PS2960/PS2968

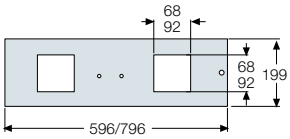

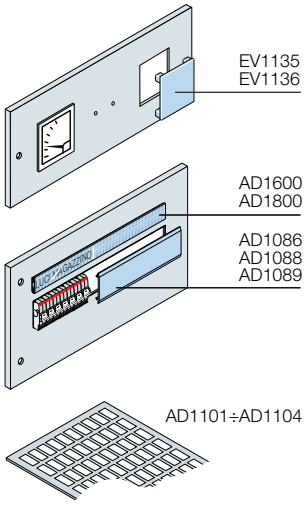

Accessories for panels

Description	Code			Package/ No. of pieces
No.10 holes covers W=2000mm grey RAL 7035 colour	AD1086			1/10
No.3 holes covers 24 Din modules grey RAL 7035 colour	AD1088			1/3
No.3 holes covers 36 Din modules grey RAL 7035 colour	AD1089			1/3
No.10 closing caps for instrument panel 72x72mm	EV1135			1/10
No.5 closing caps for instrument panel 96x96mm	EV1136			1/5
No.20 label-holders 24 DIN mod.	AD1600			1/20
No.20 label-holders 36 DIN mod.	AD1800			1/20
No.288 labels 1 mod. 15x17mm (HxW)	AD1101 (1)			1/288
No.192 labels 2 mod. 15x27mm (HxW)	AD1102 (1)			1/192
No.96 labels 3 mod. 15x50mm (HxW)	AD1103 (1)			1/96
No.96 labels 4 mod. 15x67mm (HxW)	AD1104 (1)			1/96

(1) Labels can be written with Grafoplast compatible plotter system.

> Rapid selection table page 5/6 > In-depth technical information page 6/1 > Overall dimensions page 7/1

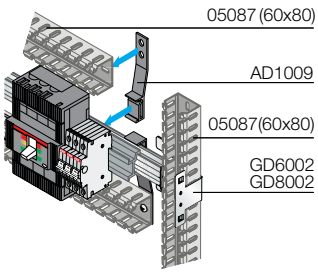

STRUCTURES WITHOUT SEGREGATION/SEGREGATED

Kit for apparatus

Ducts supports

Description	Code			Package/ No. of pieces
No.4 plastic supports for horizontal duct	AD1009			1/4
No.4 metal supports for horizontal duct	AD1037			1/4

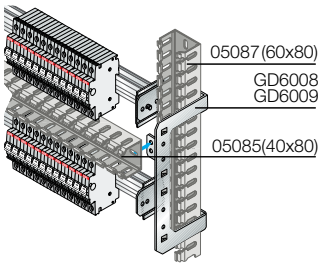

Depth adapters

Enables the depth of miniature circuit-breakers to be adapted to that of moulded-case circuit-breakers mounted on the same DIN rail.

Description	Dimensions (mm) W	Code			Package/ No. of pieces
No.1 depth adapter for Tmax T1-T2-T3 floor-standing	600	AP6000			1/1
No.1 depth adapter for Tmax T1-T2-T3 wall-mounting	600	AP6001			1/1

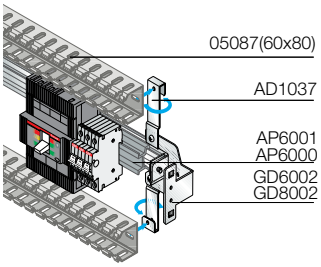

> Rapid selection table page 5/6 > In-depth technical information page 6/1 > Overall dimensions page 7/1

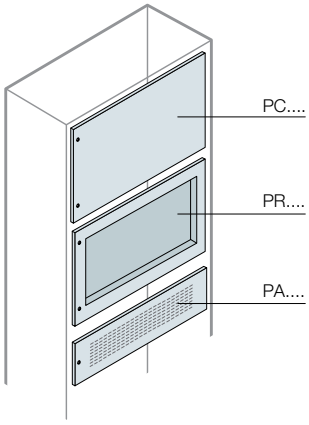

STRUCTURES WITHOUT SEGREGATION/SEGREGATED

Kit for apparatus

Blind, recessed and ventilated panels for general apparatus

Description	Dimensions (mm) W	H	Code			Package/ No. of pieces
12 DIN mod. - W=390mm						
Blind panel		100	PC1400			1/1
Blind panel		200	PC2400			1/1
Blind panel		300	PC3400			1/1
Blind panel	**390**	400	PC4400			1/1
Blind panel		600	PC6400			1/1
Blind panel		1800	PC1840			1/1
Blind panel		2000	PC2040			1/1
24 DIN mod. - W=600mm						
Blind panel		100	PC1600			1/1
Blind panel		200	PC2600			1/1
Blind panel		300	PC3600			1/1
Blind panel		400	PC4600			1/1
Blind panel		600	PC6600			1/1
Blind panel		800	PC8600			1/1
Blind panel		1600	PC1660			1/1
Blind panel	600	1800	PC1860			1/1
Blind panel		2000	PC2060			1/1
Blind recessed panel		200	PR2600			1/1
Blind recessed panel		400	PR4600			1/1
Blind recessed panel		600	PR6600			1/1
Ventilated panel		100	PA1600			1/1
Ventilated panel		200	PA2600			1/1
36 DIN mod. - W=800mm						
Blind panel		100	PC1800			1/1
Blind panel		200	PC2800			1/1
Blind panel		300	PC3800			1/1
Blind panel		400	PC4800			1/1
Blind panel		600	PC6800			1/1
Blind panel		800	PC8800			1/1
Blind panel	800	1600	PC1680			1/1
Blind panel		1800	PC1880			1/1
Blind panel		2000	PC2080			1/1
Blind recessed panel		200	PR2800			1/1
Blind recessed panel		400	PR4800			1/1
Blind recessed panel		600	PR6800			1/1
48 DIN mod. - W=1000mm						
Blind panel		100	PC1210			1/1
Blind panel		200	PC1220			1/1
Blind panel		300	PC1230			1/1
Blind panel		400	PC1240			1/1
Blind panel	1000	500	PC1250			1/1
Blind panel		600	PC1260			1/1
Ventilated panel		100	PA1010			1/1
Ventilated panel		200	PA2010			1/1

> Rapid selection table page 5/6 > In-depth technical information page 6/1 > Overall dimensions page 7/1

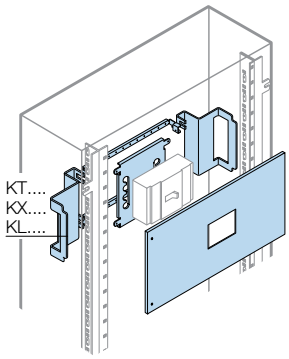

STRUCTURES WITHOUT SEGREGATION - Kit for switchgear with reduced frame

Kit for apparatus

Kit for installing Tmax circuit-breakers front terminals

Horizontal installation (front terminals)

Description	Dimensions (mm) H	W	Code			Package/ No. of pieces
24 DIN mod. - W=600mm						
Kit for T1 3/4 poles fixed	200		KT1117			1/1
Kit for T1 4 poles fixed + RC mod.	200		KT1102[1]			1/1
Kit for T2 3/4 poles fixed	200		KT2117			1/1
Kit for T2 4 poles fixed + RC mod.	200		KT2102			1/1
Kit for T3 3/4 poles fixed	200		KT3112			1/1
Kit for T3 4 poles fixed + RC mod.	300		KT3102			1/1
Kit for T4 3/4 poles fixed	200		KT4112			1/1
Kit for T4 4 poles fixed + RC mod.	200		KT4110			1/1
Kit for T5 3/4 poles fixed	300		KT5112			1/1
Kit for T5 4 poles fixed + RC mod.	300	600	KT5110			1/1
Kit for T6 3/4 poles fixed	500		KT6113			1/1
Kit for XT1 3/4 poles fixed	200		KX1617[2]			1/1
Kit for XT1 4 poles fixed + RC mod.	200		KX1602			1/1
Kit for XT2 3/4 poles fixed	200		KX2619[2]			1/1
Kit for XT2 4 poles fixed + RC mod.	200		KX2602			1/1
Kit for XT3 3/4 poles fixed	200		KX3612[2]			1/1
Kit for XT3 4 poles fixed + RC mod.	300		KX3602			1/1
Kit for XT4 3/4 poles fixed	200		KX4612[2]			1/1
Kit for XT4 4 poles fixed + RC mod.	200		KX4610			1/1
36 DIN mod. - W=800mm						
Kit for T2 4 poles fixed + RC mod.	200		KL2103			1/1
Kit for T3 3/4 poles fixed	200		KL3113			1/1
Kit for T3 4 poles fixed + RC mod.	300		KL3103			1/1
Kit for T4 3/4 poles fixed	200		KL4115			1/1
Kit for T4 4 poles fixed + RC mod.	200		KL4116			1/1
Kit for T5 3/4 poles fixed	300	800	KL5114			1/1
Kit for T5 4 poles fixed + RC mod.	300		KL5116			1/1
Kit for T6 3/4 poles fixed	500		KL6113			1/1
Kit for XT3 3/4 poles fixed	200		KL3613[2]			1/1
Kit for XT3 4 poles fixed + RC mod.	300		KX3603			1/1
Kit for XT4 3/4 poles fixed	200		KX4615[2]			1/1

[1] Version for Tmax with differential module underplaced RC 221/222.

[2] For 3 poles breakers please order accessory flange code AD3305 XT1 3P Flange for platemounting: AD3306 XT2 3P Flange for plate-mounting, AD3307 XT3 3P Flange for platemounting, AD3308 XT4 3P Flange for plate-mounting.

> Rapid selection table page 5/6 > In-depth technical information page 6/1 > Overall dimensions page 7/1

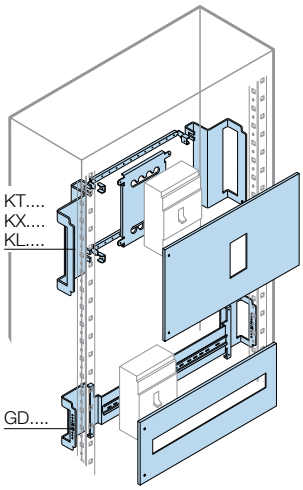

STRUCTURES WITHOUT SEGREGATION - Kit for switchgear with reduced frame

Kit for apparatus

Kit for installing Tmax circuit-breakers

Vertical installation (front terminals)

Description	Dimensions (mm) H	W	Code			Package/ No. of pieces
24 DIN mod. - W=600mm						
Kit for DIN T1-T2-T3-XT1-XT3, 3/4 poles fixed + RC mod.	200/600		GD…[1]			1/1
Kit for T3 3/4 poles fixed	300		KT3212			1/1
Kit for T4 3/4 poles fixed	400		KT4212			1/1
Kit for T4 4 poles fixed + RC mod.	500		KT4102			1/1
Kit for T5 3/4 poles fixed	400		KT5212			1/1
Kit for T5 3/4 poles fixed + RC mod.	500		KT5102			1/1
Kit for T6 3/4 poles fixed	500		KT6213			1/1
Kit for XT1 3/4 poles fixed	200		KX1618[4]			1/1
Kit for XT1 4 poles fixed + RC mod.	300	600	KX1603			1/1
Kit for XT1 No. 3 CBs side by side	200		KX1604[4]			1/1
Kit for XT2 No. 3/4[3] CBs side by side	200		KX2604[2]			1/1
Kit for XT3 3/4 poles fixed	300		KX3614[4]			1/1
Kit for XT3 4 poles fixed + RC mod.	300		KX3609			1/1
Kit for XT4 3/4 poles fixed	300		KX4614[4]			1/1
Kit for XT4 No. 3/4[3] CBs side by side	300		KX4604[2]			1/1
Kit for XT4 4 poles fixed + RC mod.	400		KX4602			1/1
36 DIN mod. - W=800mm						
Kit for DIN T1-T2-T3-XT1-XT3, 3/4 poles fixed + RC mod.	200/600		GD…[1]			1/1
Kit for T5 3/4 poles fixed	400	800	KL5212			1/1
Kit for T5 3/4 poles fixed + RC mod.	500		KL5102			1/1
Kit for T6 3/4 poles fixed	500		KL6213			1/1

[1] For the selection of kit for installation on DIN rail see page 5/63.

[2] Order polished flange AD3310, AD3311, AD3312, AD3313 see page 5/16.

[3] No. 4 CBs side by side 3P, No. 3 CBs side by side 4P.

[4] For 3 poles breakers please order accessory flange code AD3305 XT1 3P Flange for platemounting: AD3306 XT2 3P Flange for plate-mounting, AD3307 XT3 3P Flange for platemounting, AD3308 XT4 3P Flange for plate-mounting.

> Rapid selection table page 5/6 > In-depth technical information page 6/1 > Overall dimensions page 7/1

Orizzontale

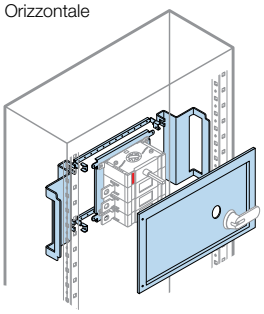

Verticale

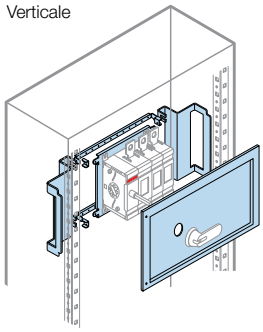

STRUCTURES WITHOUT SEGREGATION - Kit for switchgear with reduced frame

Kit for apparatus

Kit for OT160÷400

Description	Dimensions (mm) H	W	Control	Code			Package/ No. of pieces
24 DIN mod. - W=600mm							
Kit for OT160/200/250/315/400 vertical installation	300	600	Lateral	K02260			1/1
Kit for OT160/200/250/315/400 horizontal installation	300	600	Lateral	K02261			1/1
36 DIN mod. - W=800mm							
Kit for OT160/200/250/315/400 vertical installation	300	800	Lateral	K02280			1/1
Kit for OT160/200/250/315/400 horizontal installation	300	800	Lateral	K02281			1/1

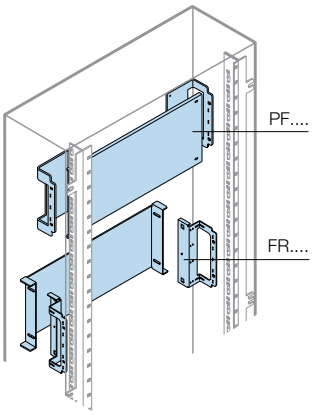

Blind back plates for general apparatus

Description	Dimensions (mm) W	H	Code			Package/ No. of pieces
24 DIN mod. - W=600mm						
Blind back plate	600	200	PF2610			1/1
Blind back plate		400	PF4610			1/1
Blind recessed back plate		200	FR2601			1/1
Blind recessed back plate		400	FR4601			1/1
36 DIN mod. - W=800mm						
Blind back plate	800	200	PF2810			1/1
Blind back plate		400	PF4810			1/1
Blind recessed back plate		200	FR2801			1/1
Blind recessed back plate		400	FR4801			1/1

The panels must be ordered separately.

> Rapid selection table page 5/6 > In-depth technical information page 6/1 > Overall dimensions page 7/1

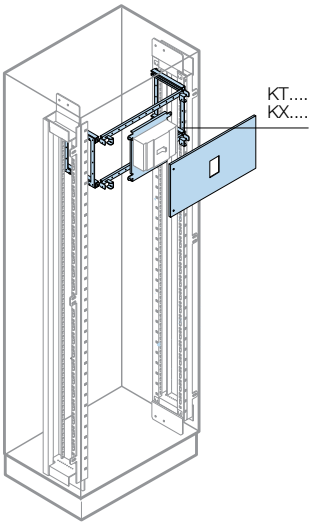

STRUCTURES WITHOUT SEGREGATION - Kit for switchgear with standard frame D≥225mm

Kit for apparatus

Kit for installing Tmax circuit-breakers

Horizontal installation (front or rear terminals)

Description	Dimensions (mm) H	W	Code			Package/ No. of pieces
12 DIN mod. - W=390mm						
Kit for T1 3/4 poles fixed	200	390	KT1411			1/1
Kit for T1 4 poles fixed + RC mod.	200		KT1401			1/1
Kit for T2 3/4 poles fixed	200		KT2411			1/1
Kit for T2 4 poles fixed + RC mod.	200		KT2401			1/1
Kit for T2 3/4 poles plug-in	200		KT2421			1/1
Kit for T3 3/4 poles fixed	200		KT3419			1/1
Kit for T3 4 poles fixed + RC mod.	300		KT3401(*)			1/1
Kit for T3 3/4 poles plug-in	200		KT3421			1/1
Kit for T4 3/4 poles fixed	200		KT4411			1/1
Kit for T5 3/4 poles fixed	300		KT5411			1/1
Kit for T7 3/4 poles fixed	400		KT7110(**)			1/1
Kit for XT1 3/4 poles fixed	200		KX1419(2)			1/1
Kit for XT1 4 poles fixed + RC mod.	200		KX1401(*)(1)			1/1
Kit for XT2 3/4 poles fixed	200		KX2411(2)			1/1
Kit for XT3 3/4 poles fixed	200		KX3411(2)			1/1
Kit for XT4 3/4 poles fixed	200		KX4411(2)			1/1
24 DIN mod. - W=600mm						
Kit for T1 3/4 poles fixed (CM)	200	600	KT1111			1/1
Kit for T1 4 poles fixed + RC mod.	200		KT1101(*)(1)			1/1
Kit for T1 3/4 poles fixed (MRD)	200		KT1112			1/1
Kit for T2 3/4 poles fixed (CM)	200		KT2111			1/1
Kit for T2 4 poles fixed + RC mod.	200		KT2101(*)			1/1
Kit for T2 3/4 poles plug-in	200		KT2121			1/1
Kit for T2 3/4 poles fixed (MRD)	200		KT2112			1/1
Kit for T3 3/4 poles fixed (CM)	200		KT3119			1/1
Kit for T3 3/4 poles fixed (I-IM)	500		KT3131(**)			1/1
Kit for T3 4 poles fixed + RC mod.	300		KT3101(*)			1/1
Kit for T3 3/4 poles fixed (MRD)	200		KT3114			1/1
Kit for T3 3/4 poles plug-in (CM)	200		KT3121			1/1
Kit for T3 3/4 poles plug-in (MRD)	200		KT3116			1/1
Kit for T4 3/4 poles fixed (MRD-CM)	200		KT4111			1/1
Kit for T4 4 poles fixed + RC mod.	200		KT4101			1/1
Kit for T4 3/4 poles plug-in	200		KT4122			1/1
Kit for T4 3/4 poles withdrawable (MRD)	300		KT4127			1/1
Kit for T4 3/4 poles withdrawable (CM)	300		KT4125			1/1

CONTINUED

(*) Only front terminals; (**) Only rear terminals.

(1) Version for Tmax with differential module underplaced RC 221/222.

(2) For 3 poles breakers please order accessory flange code AD3305 XT1 3P Flange for plate-mounting: AD3306 XT2 3P Flange for plate-mounting, AD3307 XT3 3P Flange for plate-mounting, AD3308 XT4 3P Flange for plate-mounting.

(DRH) = Direct rotary handle; (MO) = Motor operator; (I) = Interlocked; (IM) = Interlocked motor operated.

> Rapid selection table page 5/6 > In-depth technical information page 6/1 > Overall dimensions page 7/1

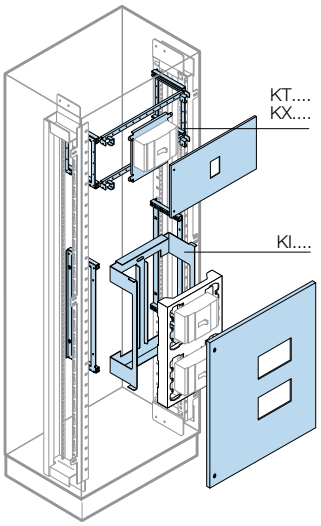

5

STRUCTURES WITHOUT SEGREGATION - Kit for switchgear with standard frame D≥225mm

Kit for apparatus

Kit for installing Tmax circuit-breakers

Horizontal installation (front or rear terminals)

Description	Dimensions (mm) H	W	Code			Package/ No. of pieces
24 DIN mod. - W=600mm						
Kit for T4 3/4 poles fixed/withdrawable (I-IM)	600		KI4114(**)			1/1
Kit for T4 3/4 poles plug-in (I-IM)	600		KI4115(**)			1/1
Kit for T5 3/4 poles fixed (MRD-CM)	300		KT5111			1/1
Kit for T5 4 poles fixed + RC mod.	300		KT5101			1/1
Kit for T5 (400A) 3/4 poles plug-in	300		KT5120			1/1
Kit for T5 (630A) 3/4 poles plug-in	300		KT5121			1/1
Kit for T5 (400A) 3/4 poles plug-in (MRD)	300		KT5130			1/1
Kit for T5 (630A) 3/4 poles plug-in (MRD)	300		KT5131			1/1
Kit for T5 (400A) 3/4 poles plug-in (CM)	300		KT5134			1/1
Kit for T5 (630A) 3/4 poles plug-in (CM)	300		KT5135			1/1
Kit for T5 3/4 poles fixed/withdrawable (I-IM)	600		KI5114(**)			1/1
Kit for T5 3/4 poles plug-in (I-IM)	600		KI5115(**)			1/1
Kit for T6 3/4 poles fixed	500		KT6111			1/1
Kit for T6 3/4 poles plug-in (MRD)	500		KT6131			1/1
Kit for T6 3/4 poles fixed (MRD)	500		KT6112			1/1
Kit for T6 3/4 poles fixed (CM)	500		KT6115			1/1
Kit for T6 3/4 poles plug-in (CM)	500		KT6114			1/1
Kit for T6 3/4 poles fixed (I)	800	600	KT6116(**)			1/1
Kit for T6 3/4 poles fixed (IM)	800		KT6117(**)			1/1
Kit for T6 3/4 poles plug-in (I)	800		KT6118(**)			1/1
Kit for T6 3/4 poles plug-in (IM)	800		KT6119(**)			1/1
Kit for T7 3/4 poles fixed	400		KT7111(3)			1/1
Kit for T7M 3/4 poles fixed (CM)	400					
Kit for T7M 3/4 poles plug-in	500		KT7560			1/1
Kit for XT1 3/4 poles fixed	200		KX1611(2)			1/1
Kit for XT1 4 poles fixed + RC mod.	200		KX1609			1/1
Kit for XT1 3/4 poles plug-in	200		KX1621(2)			1/1
Kit for XT1 3/4 poles fixed (MRD)	200		KX1605			1/1
Kit for XT1 3/4 poles fixed (CM)	200		KX1607			1/1
Kit for XT1 3/4 poles fixed/withdrawable (I)	500		KX1622			1/1
Kit for XT1 3/4 poles fixed/withdrawable (IM)	500		KX1608			1/1
Kit for XT2 3/4 poles fixed	200		KX2611(2)			1/1
Kit for XT2 4 poles fixed + RC mod.	200		KX2601			1/1
Kit for XT2 3/4 poles plug-in	200		KX2621(2)			1/1
Kit for XT2 3/4 poles plug-in	300		KX2631(2)			1/1

(*) Only front terminals; (**) Only rear terminals.

CONTINUED

(1) Versione per Tmax modulo differenziale sottoposto RC 221/222.

(2) For 3 poles breakers please order accessory flange code AD3305 XT1 3P Flange for plate-mounting: AD3306 XT2 3P Flange for plate-mounting, AD3307 XT3 3P Flange for plate-mounting, AD3308 XT4 3P Flange for plate-mounting.

(3) If used with rotary handle, use the protruding door PV..63 and PV..83.

(DRH) = Direct rotary handle; (MO) = Motor operator; (I) = Interlocked; (IM) = Interlocked motor operated.

> Rapid selection table page 5/6 > In-depth technical information page 6/1 > Overall dimensions page 7/1

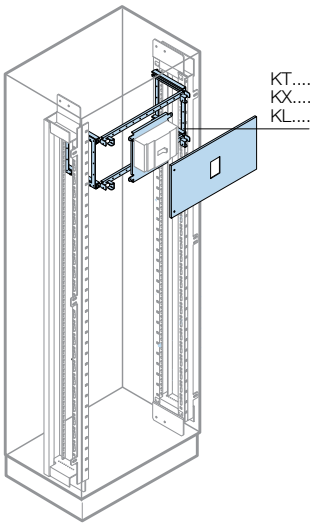

STRUCTURES WITHOUT SEGREGATION - Kit for switchgear with standard frame D≥225mm

Kit for apparatus

Kit for installing Tmax circuit-breakers

Horizontal installation (front or rear terminals)

Description	Dimensions (mm) H	W	Code			Package/ No. of pieces
24 DIN mod. - W=600mm						
Kit for XT2 4 poles fixed + RC mod.	300		KX2634[3]			1/1
Kit for XT2 3/4 poles fixed (MRD)	200		KX2605			1/1
Kit for XT2 3/4 poles fixed (CM)	200		KX2607			1/1
Kit for XT2 3/4poles fixed/withdrawable (I)	500		KX2622			1/1
Kit for XT2 3/4poles fixed/withdrawable (CM)	500		KX2608			1/1
Kit for XT2 3/4 poli estraibile (MRD)	500		KX2632			1/1
Kit for XT3 3/4 poles fixed	200		KX3611[2]			1/1
Kit for XT3 4 poles fixed + RC mod.	300		KX3601			1/1
Kit for XT3 3/4 poles plug-in	200		KX3621[2]			1/1
Kit for XT3 3/4 poles fixed (MRD)	200		KX3605			1/1
Kit for XT3 3/4 poles fixed (CM)	200		KX3607			1/1
Kit for XT3-XT1 3/4 poles fixed (I)	500		KX1131[2]			1/1
Kit for XT3 3/4 poles fixed (I)	500		KX3131[2]			1/1
Kit for XT3-XT1 3/4 poles fixed (IM)	500		KX1132[2]			1/1
Kit for XT3 3/4 poles fixed (IM)	500	600	KX3132[2]			1/1
Kit for XT4 3/4 poles fixed	200		KX4611[2]			1/1
Kit for XT4 4 poles fixed + RC mod.	200		KX4601			1/1
Kit for XT4 3/4 poles plug-in	200		KX4622[2]			1/1
Kit for XT4 3/4 poli estraibile	300		KX4627[2]			1/1
Kit for XT4 4 poles fixed + RC mod.	300		KX4633[4]			1/1
Kit for XT4 3/4 poles fixed (CM)	200		KX4607[2]			1/1
Kit for XT4 3/4 poles fixed (I)	500		KX4141[2]			1/1
Kit for XT4 3/4 poles fixed (IM)	500		KX4142[2]			1/1
Kit for XT4 3/4 poles fixed (MRD)	200		KX4606[2]			1/1
Kit for XT4 3/4 poli estraibile (MRD)	300		KX4632			1/1
36 DIN mod. - W=800mm						
Kit for T1 4 poles fixed + RC mod.	200		KL1102[*][2]			1/1
Kit for T2 4 poles fixed + RC mod.	200		KL2104[1]			1/1
Kit for T3 3/4 poles fixed	200		KL3114			1/1
Kit for T3 4 poles fixed + RC mod.	300		KL3104[1]			1/1
Kit for T5 3/4 poles fixed	300		KL5115			1/1
Kit for T5 4 poles fixed + RC mod.	300	800	KL5101			1/1
Kit for T7 3/4 poles fixed	400		KL7112			1/1
Kit for XT1 4 poles fixed + RC mod.	200		KX1801			1/1
Kit for XT2 4 poles fixed + RC mod.	200		KX2801			1/1
Kit for XT3 3/4 poles fixed	200		KX3811[2]			1/1
Kit for XT3 4 poles fixed + RC mod.	300		KX3801			1/1

(*) Only front terminals; (**) Only rear terminals.

[1] Version for Tmax with differential module underplaced RC 221/222.

[2] For 3 poles breakers please order accessory flange code AD3305 XT1 3P Flange for plate-mounting: AD3306 XT2 3P Flange for plate-mounting, AD3307 XT3 3P Flange for plate-mounting, AD3308 XT4 3P Flange for plate-mounting.

[4] withdrawable + differential module underplaced.

(DRH) = Direct rotary handle; (MO) = Motor operator; (I) = Interlocked; (IM) = Interlocked motor operated.

> Rapid selection table page 5/6 > In-depth technical information page 6/1 > Overall dimensions page 7/1

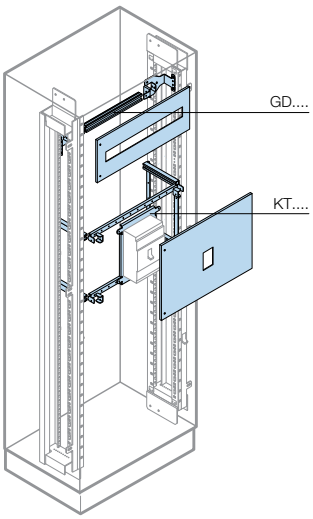

STRUCTURES WITHOUT SEGREGATION - Kit for switchgear with standard frame D≥225mm

Kit for apparatus

Kit for installing Tmax circuit-breakers

Vertical installation (front or rear terminals)

Description	Dimensions (mm) H	W	Code			Package/ No. of pieces
12 DIN mod. - W=390mm						
Kit DIN T1-T2-T3-XT1-XT3, 3/4 P fixed + RC mod.	200÷600		GD....[1]			1/1
Kit for T3 3/4 poles fixed	300		KT3416			1/1
Kit for T3 3/4 poles plug-in	400		KT3426			1/1
Kit for T4 3/4 poles fixed	400	390	KT4412			1/1
Kit for T5 3/4 poles fixed	400		KT5412			1/1
Kit for T5 4 poles fixed + RC mod.	500		KT5401			1/1
Tmax XT3 3/4 poles fixed	300		KX3412[2]			1/1
Tmax XT4 3/4 poles fixed	300		KX4412[2]			1/1
24 DIN mod. - W=600mm						
Kit DIN T1-T2-T3-XT1-XT3, 3/4 P fixed + RC mod.	200÷600		GD....[1]			1/1
Kit for T3 3/4 poles fixed	300		KT3211			1/1
Kit for T3 3/4 poles plug-in	400		KT3221			1/1
Kit for T4 3/4 poles fixed (MRD-CM)	400		KT4211			1/1
Kit for No.3 T4 3/4 poles fixed	400		KT4116			1/1
Kit for T4 4 poles fixed + RC mod..	500		KT4103			1/1
Kit for T4 3/4 poles plug-in	400		KT4221			1/1
Kit for T4 3/4 poles withdrawable (MRD)	400		KT4231			1/1
Kit for T4 3/4 poles withdrawable (CM)	400		KT4126			1/1
Kit for T5 3/4 poles fixed (MRD-CM)	400		KT5211			1/1
Kit for T5 4 poles fixed + RC mod..	500		KT5103			1/1
Kit for No.2 T5 3/4 poles fixed	400	600	KT5214			1/1
Kit for No.2 T5 3/4 poles fixed + RC mod..	500		KT5117			1/1
Kit for T5 (400A) 3/4 poles plug-in	400		KT5222			1/1
Kit for T5 (630A) 3/4 poles plug-in	400		KT5221			1/1
Kit for T5 (400A) 3/4 poles withdrawable (MRD)	400		KT5232			1/1
Kit for T5 (400A) 3/4 poles withdrawable (CM)	400		KT5138			1/1
Kit for T5 (630A) 3/4 poles withdrawable (CM)	500		KT5139			1/1
Kit for T5 (630A) 3/4 poles withdrawable (MRD)	500		KT5231			1/1
Kit for T6 3/4 poles fixed	500		KT6211			1/1

CONTINUED

(1) For the selection of kit for installation on DIN rail see page 5/63.

(2) For 3 poles breakers please order accessory flange code AD3305 XT1 3P Flange for plate-mounting: AD3306 XT2 3P Flange for plate-mounting, AD3307 XT3 3P Flange for plate-mounting, AD3308 XT4 3P Flange for plate-mounting.

(DRH) = Direct rotary handle; (MO) = Motor operator; (I) = Interlocked; (IM) = Interlocked motor operated.

> Rapid selection table page 5/6 > In-depth technical information page 6/1 > Overall dimensions page 7/1

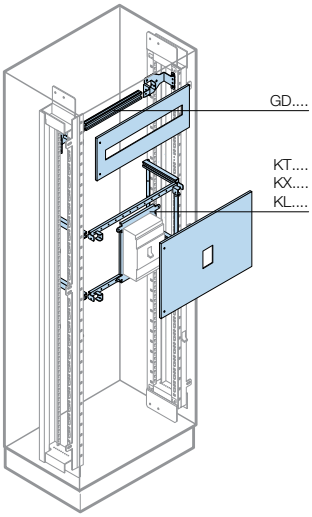

STRUCTURES WITHOUT SEGREGATION - Kit for switchgear with standard frame D≥225mm

Kit for apparatus

Kit for installing Tmax circuit-breakersx

Vertical installation (front or rear terminals)

Description	Dimensions (mm) H	W	Code			Package/ No. of pieces
24 DIN mod. - W=600mm						
Kit for T6 3/4 poles withdrawable	500	600	KT6122			1/1
Kit for T6 3/4 poles fixed (MRD)	500		KT6120			1/1
Kit for T6 3/4 poles fixed (CM)	500		KT6121			1/1
Kit for T6 3/4 poles withdrawable (CM)	500		KT6123			1/1
Kit for T7 3/4 poles fixed Kit for T7M 3/4 poles fixed (CM-I-IM)	500		KT7211[5]			1/1
Kit for T7 3/4 poles withdrawable Kit for T7M 3/4 poles withdrawable (CM-I-IM)	500		KT7231			1/1
Kit for XT4 No. 3/4[4] CBs side by side	200		KX2612[3]			1/1
Kit for XT3 3/4 poles fixed	300		KX3613[2]			1/1
Kit for XT4 3/4 poles fixed	300		KX4617[2]			1/1
Kit for XT4 4 poles fixed + RC mod.	400		KX4603			1/1
Kit for XT4 No. 2 CBs side by side	300		KX4616[2]			1/1
Kit for XT2/XT4 3/4 poles fixed (I)	400		KX2412			1/1
36 DIN mod. - W=800mm						
Kit DIN T1-T2-T3-XT1-XT3, 3/4 poles fixed + RC mod.	200÷600	800	GD....[1]			1/1
Kit for T3 3/4 poles fixed	300		KL3212			1/1
Kit for No.4 T4 3/4 poles fixed	400		KL4118			1/1
Kit for T5 3/4 poles fixed	400		KL5213			1/1
Kit for T5 4 poles fixed + RC mod.	500		KL5103			1/1
Kit for No.3 T5 3/4 poles fixed	400		KL5214			1/1
Kit for No.3 T5 3/4 poles fixed + RC mod.	500		KL5117			1/1
Kit for T6 3/4 poles fixed	500		KL6214			1/1
Kit for No.2 T6 3/4 poles fixed	500		KL6124			1/1
Kit for T7 3/4 poles fixed	500		KL7212			1/1
Kit for T7 3/4 poles withdrawable	500		KL7213			1/1
Kit for T8 3/4 poles fixed	800		KT8211			1/1
Kit for XT3 3/4 poles fixed	300		KX3812[2]			1/1
Kit for XT4 No. 3 CBs side by side	300		KX4818[2]			1/1

[1] For the selection of kit for installation on DIN rail see page 5/63.

[2] For 3 poles breakers please order accessory flange code AD3305 XT1 3P Flange for plate-mounting: AD3306 XT2 3P Flange for plate-mounting, AD3307 XT3 3P Flange for plate-mounting, AD3308 XT4 3P Flange for plate-mounting.

[3] Order polished flange AD3310, AD3311, AD3312, AD3313 see page 5/16.

[4] No. 4 CBs side by side 3P, No. 3 CBs side by side 4P.

[5] If used with rotary handle, use the protruding door PV..63 and PV..83.

(DRH) = Direct rotary handle; (MO) = Motor operator; (I) = Interlocked; (IM) = Interlocked motor operated.

> Rapid selection table page 5/6 > In-depth technical information page 6/1 > Overall dimensions page 7/1

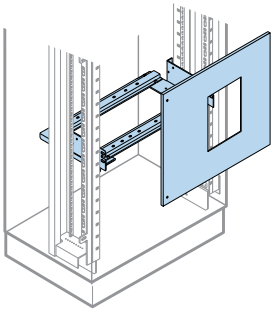

STRUCTURES WITHOUT SEGREGATION - Kit for switchgear with standard frame D≥225mm

Kit for apparatus

Kit for installing Emax circuit-breakers X1, E1, E2, E3, E4, E6

Vertical installation

Description	Dimensions (mm) H	W	Code			Package/ No. of pieces
24 DIN mod. - W=600mm						
Kit for X1 3/4 poles fixed	500	600	KT7211			1/1
Kit for X1 3/4 poles withdrawable	500		KT7231			1/1
Kit for E1-E2-E3 3/4 poles fixed	600		KE3215 (1)			1/1
Kit for E1-E2 -E3 3/4 poles withdrawable	600		KE3235 (1)			1/1
36 DIN mod. - W=800mm						
Kit for X1 3/4 poles fixed	500	800	KL7212			1/1
Kit for X1 3/4 poles withdrawable	500		KL7213			1/1
Kit for E3 3/4 poles fixed	600		KE4215 (2)			1/1
Kit for E3 3/4 poles withdrawable	600		KE4235 (2)			1/1
Kit for E4 3/4 poles fixed (I) neutral 50%	600		KE5215 (2)			1/1
Kit for E4 3/4 poles withdrawable (I) neutral 50%	600		KE5235 (2)			1/1
48 DIN mod. - W=1000mm						
Kit for E4 4 poles fixed 100% neutral	600	1000	KE4000			1/1
Kit for E4 4 poles withdrawable 100% neutral	600		KE5237			1/1
Kit for E6 3/4 poles fixed 50% neutral	600		KE6342			1/1
Kit for E6 3/4 poles withdrawable 50% neutral	600		KE6341			1/1

(1) Also for E1-E2 interlocked version.

(2) Also for interlocked version.

(I) = Interlocked

Orizzontale

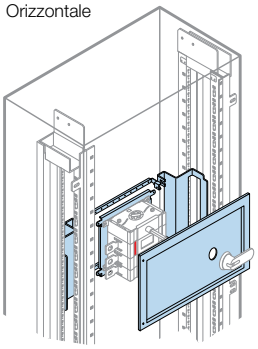

Verticale

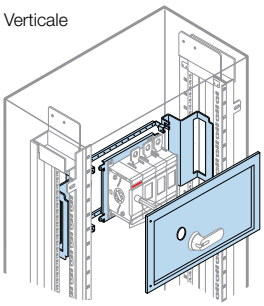

Kit for OT160÷1600

Description	Dimensions (mm) H	W	Control	Code			Package/ No. of pieces
24 DIN mod. - W=600mm							
Kit for vertical OT160/200/250/315/400	300	600	Lateral	K02260			1/1
Kit for horizontal OT160/200/250/315/400	300	600	Lateral	K02261			1/1
Kit for vertical OT630/800	400	600	Lateral	K03660			1/1
Kit for vertical OT1000-1600A	600	600	Lateral	K01250			1/1
36 DIN mod. - W=800mm							
Kit for vertical OT160/200/250/315/400	300	800	Lateral	K02280			1/1
Kit for horizontal OT160/200/250/315/400	300	800	Lateral	K02281			1/1
Kit for vertical OT630/800	400	800	Lateral	K03680			1/1

> Rapid selection table page 5/6 > In-depth technical information page 6/1 > Overall dimensions page 7/1

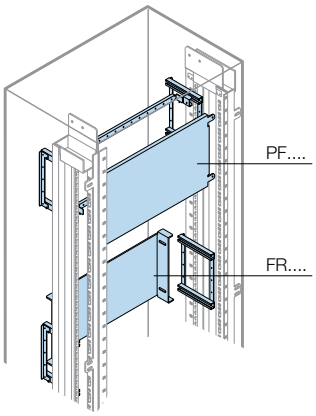

STRUCTURES WITHOUT SEGREGATION - Kit for switchgear with standard frame D≥225mm

Kit for apparatus

Blind back plates for general apparatus

Description	Dimensions (mm) W	H	Code			Package/ No. of pieces
12 DIN mod. - W=390mm						
Blind back plate	390	200	PF2401			1/1
Blind back plate		300	PF3403			1/1
Blind back plate		400	PF4401			1/1
Blind back plate		600	PF6401			1/1
24 DIN mod. - W=600mm						
Blind back plate	600	200	PF2601			1/1
Blind back plate		300	PF3601			1/1
Blind back plate		400	PF4601			1/1
Blind back plate		600	PF6601			1/1
Blind recessed back plate		200	FR2600			1/1
Blind recessed back plate		400	FR4600			1/1
Blind recessed back plate		600	FR6600			1/1
36 DIN mod. - W=800mm						
Blind back plate	800	200	PF2801			1/1
Blind back plate		300	PF3801			1/1
Blind back plate		400	PF4801			1/1
Blind back plate		600	PF6801			1/1
Blind recessed back plate		200	FR2800			1/1
Blind recessed back plate		400	FR4800			1/1
Blind recessed back plate		600	FR6800			1/1
48 DIN mod. - W=1000mm						
Blind back plate	1000	200	PF2100			1/1
Blind back plate		300	PF3100			1/1
Blind back plate		400	PF4100			1/1
Blind back plate		600	PF6100			1/1

5

> Rapid selection table page 5/6 > In-depth technical information page 6/1 > Overall dimensions page 7/1

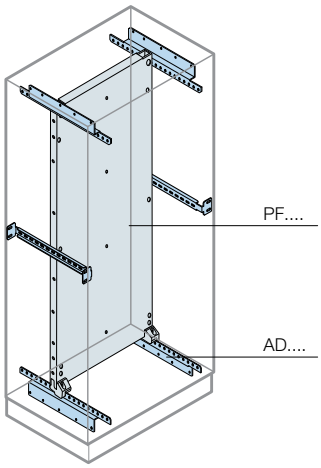

STRUCTURES WITHOUT SEGREGATION - Kit for switchgear with standard frame D≥225mm

Kit for apparatus

Back plates

Description	Dimensions (mm) W	H	Code			Package/ No. of pieces
24 DIN mod. - W=600mm						
Galvanised sheet back plate	600	1800	PF1806			1/1
Galvanised sheet back plate		2000	PF2006			1/1
36 DIN mod. - W=800mm						
Galvanised sheet back plate	800	1800	PF1808			1/1
Galvanised sheet back plate		2000	PF2008			1/1

Tracks for back plate

Description	Dimensions (mm) D	Code			Package/ No. of pieces
Pair of tracks + crosspieces	225	AD1049			1/1
Pair of tracks + crosspieces	500	AD1050			1/1
Pair of tracks + crosspieces	700	AD1051			1/1

> Rapid selection table page 5/6 > In-depth technical information page 6/1 > Overall dimensions page 7/1

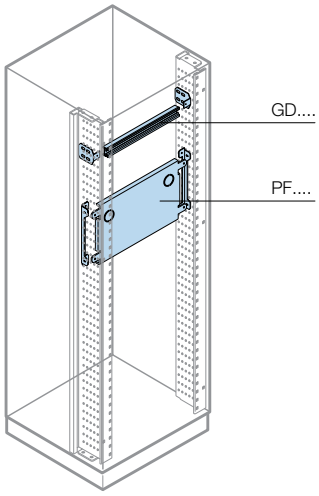

SEGREGATED STRUCTURES- Kit for switchgear with segregated frame D≥500mm

Kit for apparatus

DIN rail kit for System Pro-M modular, Tmax T1-T2-T3-XT1-XT3, moulded-case circuit-breakers

DIN rail kit

Description	Dimensions (mm) W	Code			Package/ No. of pieces
12 DIN mod. - W=390mm					
DIN rail kit (aluminium)	390	GD4005			1/1
24 DIN mod. - W=600mm					
DIN rail kit (aluminium)	600	GD7005			1/1
36 DIN mod. - W=800mm					
DIN rail kit (aluminium)	800	GD9005			1/1
48 DIN mod. - W=1000mm					
DIN rail kit (aluminium)	1000	GD1001			1/1

5

Blind back plates for general apparatus

Description	Dimensions (mm) W	H	Code			Package/ No. of pieces
12 DIN mod. - W=390mm						
Blind back plate	390	200	PF2405			1/1
Blind back plate		300	PF3405			1/1
Blind back plate		400	PF4405			1/1
Blind back plate		600	PF6405			1/1
24 DIN mod. - W=600mm						
Blind back plate	600	200	PF2005			1/1
Blind back plate		300	PF3005			1/1
Blind back plate		400	PF4005			1/1
Blind back plate		600	PF6005			1/1
Blind back plate		800	PF8005			1/1
36 DIN mod. - W=800mm						
Blind back plate	800	200	PF2805			1/1
Blind back plate		300	PF3805			1/1
Blind back plate		400	PF4805			1/1
Blind back plate		600	PF6805			1/1
Blind back plate		800	PF8805			1/1
48 DIN mod. - W=1000mm						
Blind back plate	1000	200	PF2090			1/1
Blind back plate		300	PF3090			1/1
Blind back plate		400	PF4090			1/1
Blind back plate		600	PF6090			1/1

> Rapid selection table page 5/6 > In-depth technical information page 6/1 > Overall dimensions page 7/1

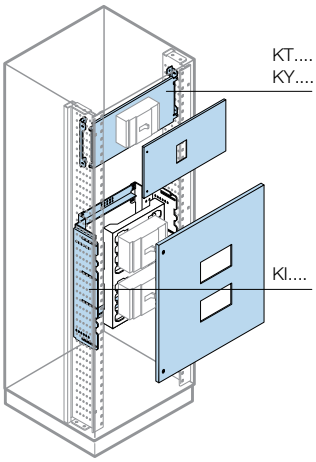

SEGREGATED STRUCTURES- Kit for switchgear with segregated frame D≥500mm

Kit for apparatus

Kit for installing Tmax circuit-breakers

Horizontal installation (rear terminals)

Description	Dimensions (mm) H	W	Code			Package/ No. of pieces
12 DIN mod. - W=390mm						
Kit for T1 3/4 poles fixed	200		KT1410			1/1
Kit for T2 3/4 poles fixed	200		KT2410			1/1
Kit for T2 3/4 poles plug-in	200		KT2420			1/1
Kit for T3 3/4 poles fixed	200		KT3410			1/1
Kit for T3 3/4 poles plug-in	200		KT3420			1/1
Kit for T4 3/4 poles fixed	200		KT4120			1/1
Kit for T5 3/4 poles fixed	300	390	KT5122			1/1
Kit for XT1 3/4 poles fixed	200		KY1411 (2)			1/1
Kit for XT2 3/4 poles fixed	200		KY2411 (2)			1/1
Kit for XT2 3/4 poles plug-in	200		KY2421 (2)			1/1
Kit for XT3 3/4 poles fixed	200		KY3411 (2)			1/1
Kit for XT3 3/4 poles plug-in	300		KY3421 (2)			1/1
Kit for XT4 3/4 poles fixed	200		KY4411 (2)			1/1
24 DIN mod. - W=600mm						
Kit for T1 3/4 poles fixed	200		KT1110			1/1
Kit for T1 4 poles fixed + RC mod.	200		KT1100			1/1
Kit for T2 3/4 poles fixed	200		KT2110			1/1
Kit for T2 3/4 poles fixed (MRD)	200		KT2210			1/1
Kit for T2 3/4 poles plug-in	200		KT2120			1/1
Kit for T3 3/4 poles fixed	200		KT3110			1/1
Kit for T3 3/4 poles fixed (MRD)	200		KT3115			1/1
Kit for T3 3/4 poles plug-in	200		KT3120			1/1
Kit for T3 3/4 poles plug-in (MRD)	200		KT3124			1/1
Kit for T3 3/4 poles fixed (I-IM)	600		KT3132			1/1
Kit for T4 3/4 poles fixed (MRD)	200		KT4124			1/1
Kit for T4 3/4 poles fixed (CM)	200		KT4310			1/1
Kit for T4 3/4 poles plug-in	200		KT4113			1/1
Kit for T4 3/4 poles fixed and plug-in (I-IM)	600	600	KI4116			1/1
Kit for T4 3/4 poles plug-in (I-IM)	600		KI4119			1/1
Kit for T4 3/4 poles withdrawable (MRD)	300		KT4130			1/1
Kit for T4 3/4 poles withdrawable (CM)	300		KT4320*			1/1
Kit for T4 3/4 poles withdrawable (I)	600		KI4117			1/1
Kit for T4 3/4 poles withdrawable (IM)	600		KI4118			1/1
Kit for T5 3/4 poles fixed (MRD)	300		KT5136			1/1
Kit for T5 3/4 poles fixed (CM)	300		KT5310			1/1
Kit for T5 3/4 poles fixed and plug-in (I-IM)	600		KI5116			1/1
Kit for T5 3/4 poles plug-in (I-IM)	600		KI5119			1/1
Kit for T5 (400A) 3/4 poles plug-in	300		KT5420			1/1
Kit for T5 (630A) 3/4 poles plug-in	300		KT5421			1/1
Kit for T5 (400A) 3/4 poles withdrawable (MRD)	300		KT5430			1/1
Kit for T5 (630A) 3/4 poles withdrawable (MRD)	300		KT5431			1/1

* Only segregation Form 2

CONTINUED

(1) If used with rotary handle, use the protruding door PV..63 and PV..83.

(2) For 3 poles breakers please order accessory flange code AD3305 XT1 3P Flange for plate-mounting: AD3306 XT2 3P Flange for plate-mounting, AD3307 XT3 3P Flange for plate-mounting, AD3308 XT4 3P Flange for plate-mounting.

(DRH) = Direct rotary handle; (MO) = Motor operator; (I) = Interlocked; (IM) = Interlocked motor operated.

> Rapid selection table page 5/6 > In-depth technical information page 6/1 > Overall dimensions page 7/1

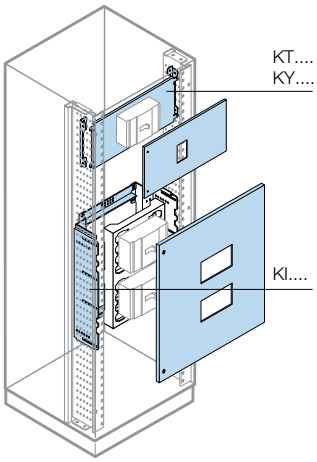

SEGREGATED STRUCTURES- Kit for switchgear with segregated frame D≥500mm

Kit for apparatus

Kit for installing Tmax circuit-breakers

Horizontal installation (rear terminals)

Description	Dimensions (mm) H	W	Code			Package/ No. of pieces
24 DIN mod. - W=600mm						
Kit for T5 (400A) 3/4 poles withdrawable (CM)	300		KT5320*			1/1
Kit for T5 (630A) 3/4 poles withdrawable (CM)	300		KT5321*			1/1
Kit for T5 3/4 poles withdrawable (I)	600		KI5117			1/1
Kit for T5 3/4 poles withdrawable (IM)	600		KI5118			1/1
Kit for T6 3/4 poles fixed	500		KT6110			1/1
Kit for T6 3/4 poles fixed (MRD)	500		KT6220			1/1
Kit for T6 3/4 poles fixed (CM)	500		KT6221			1/1
Kit for T6 3/4 poles fixed (I)	800		KT6142			1/1
Kit for T6 3/4 poles fixed (IM)	800		KT6143			1/1
Kit for T6 3/4 poles withdrawable	500		KT6130			1/1
Kit for T6 3/4 poles withdrawable (CM)	500		KT6134*			1/1
Kit for T6 3/4 poles withdrawable (I)	800		KT6144			1/1
Kit for T6 3/4 poles withdrawable (IM)	800		KT6145			1/1
Kit for T7 3/4 poles fixed Kit for T7M 3/4 poles fixed (CM)	400		KT7115[1]			1/1
Kit for T7M-X1 3/4 poles withdrawable	500		KT7561			1/1
Kit for XT1 3/4 poles fixed	200		KY1611[2]			1/1
Kit for XT1 poles fixed + RC mod.	200		KY1601			1/1
Kit for XT1 3/4 poles plug-in	200		KY1621[2]			1/1
Kit for XT1 3/4 poles fixed (MRD)	200		KY1605			1/1
Kit for XT1 3/4 poles fixed (CM)	200	600	KY1607			1/1
Kit for XT2 3/4 poles fixed	200		KY2611[2]			1/1
Kit for XT2 poles fixed + RC mod.	200		KY2601			1/1
Kit for XT2 3/4 poles plug-in	200		KY2621[2]			1/1
Kit for XT2 3/4 poles withdrawable	300		KY2631[2]			1/1
Kit for XT2 3/4 poles fixed (MRD)	200		KY2605			1/1
Kit for XT2 3/4 poles fixed (CM)	200		KY2607			1/1
Kit for XT3 3/4 poles fixed	200		KY3611[2]			1/1
Kit for XT3 poles fixed + RC mod.	300		KY3601			1/1
Kit for XT3 3/4 poles plug-in	300		KY3621[2]			1/1
Kit for XT3 3/4 poles fixed (MRD)	200		KY3605			1/1
Kit for XT3 3/4 poles fixed (CM)	200		KY3607			1/1
Kit for XT3 - XT1 3/4 poles fixed (I)	500		KY1131[2]			1/1
Kit for XT3 3/4 poles fixed (I)	500		KY3131[2]			1/1
Kit for XT4 3/4 poles fixed	200		KY4611[2]			1/1
Kit for XT4 poles fixed + RC mod.	200		KY4601			1/1
Kit for XT4 3/4 poles plug-in	200		KY4621[2]			1/1
Kit for XT4 3/4 poles withdrawable	300		KY4631[2]			1/1
Kit for XT4 3/4 poles fixed (MRD)	200		KY4607			1/1
Kit for XT4 3/4 poles fixed (CM)	200		KY4604			1/1
Kit for XT4 3/4 poles fixed (I)	500		KY4141[2]			1/1

* Only segregation Form 2

[1] If used with rotary handle, use the protruding door PV..63 and PV..83.

[2] For 3 poles breakers please order accessory flange code AD3305 XT1 3P Flange for plate-mounting: AD3306 XT2 3P Flange for plate-mounting, AD3307 XT3 3P Flange for plate-mounting, AD3308 XT4 3P Flange for plate-mounting.

(DRH) = Direct rotary handle; (MO) = Motor operator; (I) = Interlocked; (IM) = Interlocked motor operated.

> Rapid selection table page 5/6 > In-depth technical information page 6/1 > Overall dimensions page 7/1

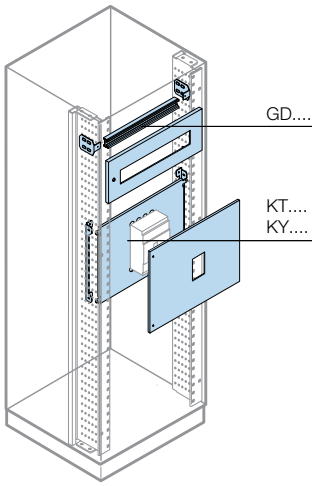

SEGREGATED STRUCTURES- Kit for switchgear with segregated frame D≥500mm

Kit for apparatus

Kit for installation of Tmax circuit-breakers

Vertical installation (rear terminals)

Description	Dimensions (mm) H	W	Code			Package/ No. of pieces
12 DIN mod. - W=390mm						
Kit DIN T1-T2-T3-XT1-XT3, 3/4 poles fixed+RC mod.	200	390	GD....[1]			1/1
Kit for T4 3/4 poles fixed	400		KT4129			1/1
Kit for T5 3/4 poles fixed	400		KT5137			1/1
Kit for T5 (630A) 3/4 poles plug-in	400		KT5125			1/1
Kit for T5 (630A) 3/4 poles withdrawable	400		KT5126			1/1
Tmax XT4 3/4 poles fixed	300		KY4412[3]			1/1
24 DIN mod. - W=600mm						
Kit DIN T1-T2-T3-XT1-XT3, 3/4 poles fixed+RC mod.	200	600	GD....[1]			1/1
Kit for T4 3/4 poles fixed	400		KT4121			1/1
Kit for T4 3/4 poles plug-in	400		KT4222			1/1
Kit for T4 3/4 poles withdrawable	400		KT4128			1/1
Kit for T5 3/4 poles fixed	400		KT5128			1/1
Kit for T5 (400A) 3/4 poles plug-in	400		KT5129			1/1
Kit for T5 (630A) 3/4 poles plug-in	400		KT5123			1/1
Kit for T5 (400A) 3/4 poles withdrawable	400		KT5223			1/1
Kit for T5 (630A) 3/4 poles withdrawable	400		KT5124			1/1
Kit for T6 3/4 poles fixed	500		KT6210			1/1
Kit for T6 3/4 poles withdrawable (MRD)	500		KT6230			1/1
Kit for T6 3/4 poles fixed (MRD)	500		KT6132			1/1
Kit for T6 3/4 poles fixed (CM)	500		KT6133			1/1
Kit for T6 3/4 poli estrabile (CM)	500		KT6141			1/1
Kit for T7 3/4 poles fixed Kit for T7M 3/4 poles fixed (CM-I-IM)	500		KT7215[2]			1/1
Kit for T7 3/4 poles withdrawable Kit for T7M 3/4 poles withdrawable (CM-I-IM)	500		KT7230			1/1
Kit for XT4 3/4 poles fixed	300		KY4612[3]			1/1
36 DIN mod. - W=800mm						
Kit DIN T1-T2-T3-XT1-XT3, 3/4 poles fixed+RC mod.	200	800	GD....[1]			1/1
Kit for T8 3/4 poles fixed	900		KT8210			1/1

[1] For the selection of kit for installation on DIN rail see page 5/79.

[2] If used with rotary handle, use the protruding door PV..63 and PV..83.

[3] For 3 poles breakers please order accessory flange code AD3305 XT1 3P Flange for plate-mounting: AD3306 XT2 3P Flange for plate-mounting, AD3307 XT3 3P Flange for plate-mounting, AD3308 XT4 3P Flange for plate-mounting.

(DRH) = Direct rotary handle; (MO) = Motor operator; (I) = Interlocked; (IM) = Interlocked motor operated.

> Rapid selection table page 5/6 > In-depth technical information page 6/1 > Overall dimensions page 7/1

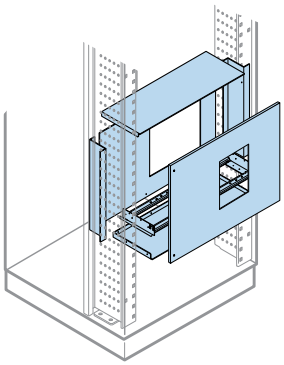

SEGREGATED STRUCTURES- Kit for switchgear with segregated frame D≥500mm

Kit for apparatus

Kit for installation of Emax circuit-breakers X1, E1, E2, E3, E4, E6

Vertical installation (rear terminals)

Description	Dimensions (mm) H	W	Code			Package/ No. of pieces
24 DIN mod. - W=600mm						
Kit for X1 3/4 poles fixed	500	600	KT7215			1/1
Kit for X1 3/4 poles withdrawable	500		KT7230			1/1
Kit for E1-E2 3/4 poles fixed	600		KE2215			1/1
Kit for E1-E2 3/4 poles withdrawable	600		KE2235			1/1
Kit for E3 3/4 poles fixed	600		KE3205			1/1
Kit for E3 3/4 poles withdrawable	600		KE3236			1/1
36 DIN mod. - W=800mm						
Kit for E3 3/4 poles fixed	600		KE4214			1/1
Kit for E3 3/4 poles withdrawable	600		KE4234			1/1
Kit for E4 3/4 poles fixed (I) 50% neutral	600		KE5214			1/1
Kit for E4 3/4 poles withdrawable (I) 50% neutral	600		KE5234			1/1
48 DIN mod. - W=1000mm						
Kit for E6 3/4 poles fixed 50% neutral	600		KE6340			1/1
Kit for E6 3/4 poles withdrawable 50% neutral	600		KE6343			1/1
Kit for E4 4 poles fixed 100% neutral	600		KE4100			1/1
Kit for E4 4 poles withdrawable 100% neutral	600		KE5236			1/1

(I) = Interlocked.

> Rapid selection table page 5/6 > In-depth technical information page 6/1 > Overall dimensions page 7/1

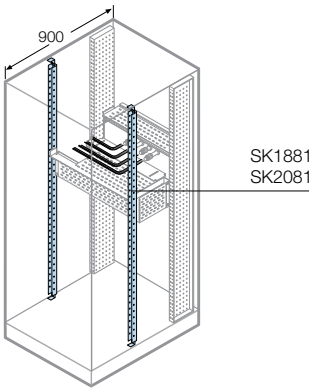

SEGREGATED STRUCTURES- Kit for switchgear with segregated frame D≥500mm

Segregation

Intermediate upright for segregated structures D=900mm

Description	Dimensions (mm) H	Code			Package/ No. of pieces
No.2 lateral intermediate uprights	1800	SK1881			1/2
No.2 lateral intermediate uprights	2000	SK2081			1/2

Horizontal circuit-breakers segregation

Form 3

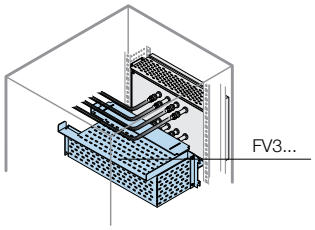

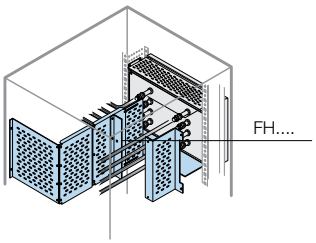

Description	Dimensions (mm) H	D	Code			Package/ No. of pieces
12 DIN mod. - W=390mm						
Segregation kit Form 3	200	500/700	FH3224			1/1
Segregation kit Form 3	300	500/700	FH3434			1/1
Segregation kit Form 3	400	500/700	FH3544			1/1
Segregation kit Form 3	600	500/700	FH3764			1/1
24 DIN mod. - W=600mm						
Segregation kit Form 3	200	500/700	FH3220			1/1
Segregation kit Form 3	300	500/700	FH3430			1/1
Segregation kit Form 3	400	500/700	FH3540			1/1
Segregation kit Form 3	500	500/700	FH3650			1/1
Segregation kit Form 3	800	500/700	FH3680			1/1
Segregation kit Form 3	600	500/700	FH3760			1/1
Segregation kit Form 3	800	500/700	FH3780			1/1
Segregation kit Form 3	200	900	FH1020			1/1
Segregation kit Form 3	300	900	FH1030			1/1
Segregation kit Form 3	400	900	FH1040			1/1
Segregation kit Form 3	500	900	FH1050			1/1
Segregation kit Form 3	600	900	FH1060			1/1
Segregation kit T7-X1 withdrawable [1]	500	700	FH7580			1/1
	500	900	FH7510			1/1

Form 4 (to add to Form 3 kits)

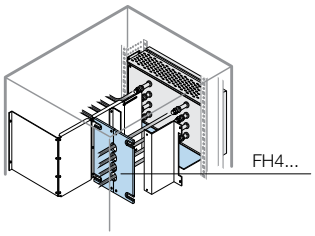

Description	Code			Package/ No. of pieces
Kit segregation form 4 to combine to FH3224 or FH3220	FH4220			1/1
Kit segregation form 4 to combine to FH3434 or FH3430	FH4430			1/1
Kit segregation form 4 to combine to FH3544 or FH3540	FH4540			1/1
Kit segregation form 4 to combine to FH3764 or FH3760	FH4650			1/1
Kit segregation form 4 to combine to FH3650	FH4220 [2]			1/1
Kit segregation form 4 to combine to FH3760	FH4760			1/1
Kit segregation form 4 to combine to FH3780	FH4220 [2]			1/1
Kit segregation form 4 to combine to FH1020	FH4220			1/1
Kit segregation form 4 to combine to FH1030	FH4430			1/1
Kit segregation form 4 to combine to FH1040	FH4540			1/1
Kit segregation form 4 to combine to FH1050	FH4650			1/1
Kit segregation form 4 to combine to FH1060	FH4760			1/1

[1] Only Form 3.
[2] Order 4 pieces
To select the proper kit, please see page 5/36.

> Rapid selection table page 5/6 > In-depth technical information page 6/1 > Overall dimensions page 7/1

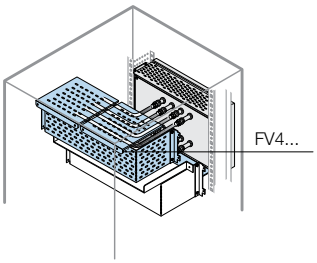

SEGREGATED STRUCTURES- Kit for switchgear with segregated frame D≥500mm

Segregation

Vertical circuit-breakers segregation

Form 3

Description	Dimensions (mm) H	D	Code			Package/ No. of pieces
Segregation kit Form 3	400	500	FV3456			1/1
Segregation kit Form 3	400	700	FV3458			1/1
Segregation kit Form 3	500	500	FV3556			1/1
Segregation kit Form 3	500	700	FV3558			1/1
Segregation kit Form 3	600	700	FV3668			1/1
Segregation kit Form 3	800	700	FV3788			1/1
Segregation kit Form 3	600	700	FV4557			1/1

Form 4 (to add to Form 3 kits)

Description	Code			Package/ No. of pieces
Kit segregation form 4 to combine to FV3456	FV4456			1/1
Kit segregation form 4 to combine to FV3458	FV4458			1/1
Kit segregation form 4 to combine to FV3556	FV4556			1/1
Kit segregation form 4 to combine to FV3558	FV4558			1/1
Kit segregation form 4 to combine to FV3668	FV4668			1/1
Kit segregation form 4 to combine to FV3788	FV4788			1/1

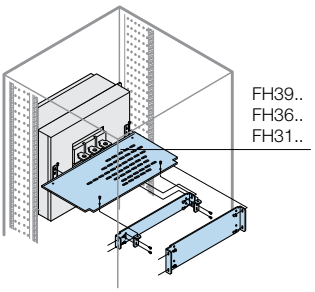

Form 3 only

Description	Dimensions (mm) W	D	Code			Package/ No. of pieces
24 DIN mod. - W=600mm						
Segregation kit Emax X1-Tmax T7 withdrawable	600	700	FH3960			1/1
Segregation kit Emax E1-E2-E3 fixed	600	700	FH3960			1/1
Segregation kit Emax E1-E2-E3 withdra-wable	600	700	FH3961			1/1
Segregation kit Emax E4 fixed	800	900	FH3965			1/1
Segregation kit Emax E4 withdrawable	800	900	FH3966			1/1
Segregation kit E1-E2-E3 fixed - T7M-X1 withdrawable	600	900	FH3690			1/1
Segregation kit E1-E2-E3 withdrawable	600	900	FH3691			1/1
48 DIN mod. - W=1000mm						
Segregation kit E4/E6 fixed	600	900	FH3190			1/1
Segregation kit E4/E6 withdrawable	600	900	FH3191			1/1

To select the proper kit, please see page 5/36.

> Rapid selection table page 5/6 > In-depth technical information page 6/1 > Overall dimensions page 7/1

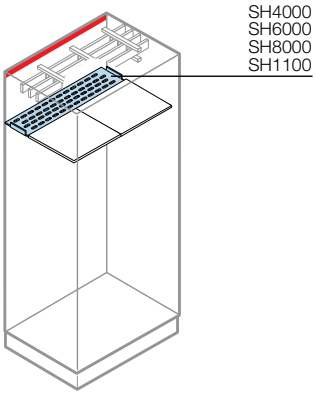

SEGREGATED STRUCTURES- Kit for switchgear with segregated frame D≥500mm

Segregation

Universal shelf

Description	Code			Package/ No. of pieces
12 DIN mod. - W=390mm				
Universal busbar segregation shelf	SH4000			1/1
24 DIN mod. - W=600mm				
Universal busbar segregation shelf	SH6000			1/1
36 DIN mod. - W=800mm				
Universal busbar segregation shelf	SH8000			1/1
48 DIN mod. - W=1000mm				
Universal busbar segregation shelf	SH1100			1/1

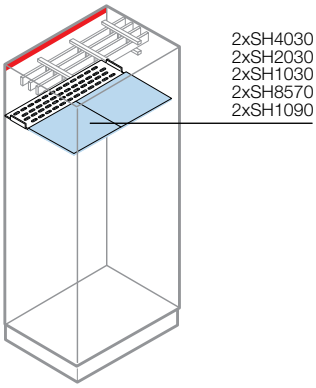

Busbar segregation Form 3

Horizontal busbar segregation down

Description	Dimensions (mm) W	D	Code			Package/ No. of pieces
12 DIN mod. - W=390mm						
Horizontal busbar segregation (down)	390	500/700	SH4030			1/1
24 DIN mod. - W=600mm						
Horizontal busbar segregation (down)	600	500/700	SH2030			1/1
Horizontal busbar segregation (down)		900	SH1030			1/1
36 DIN mod. - W=800mm						
Horizontal busbar segregation (down)	800	500/700	SH8570			1/1
48 DIN mod. - W=1000mm						
Horizontal busbar segregation (down)	1000	900	SH1090			1/1

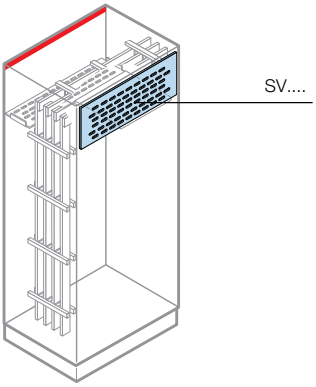

Horizontal busbar segregation rear

Description	Dimensions (mm) H	Code			Package/ No. of pieces
12 DIN mod. - W=390mm					
Horizontal busbar segregation (rear)	200	SV4061			1/1
24 DIN mod. - W=600mm					
Horizontal busbar segregation (rear)	200	SV2061			1/1
Horizontal busbar segregation (rear)	300	SV3060			1/1
36 DIN mod. - W=800mm					
Horizontal busbar segregation (rear)	200	SV2081			1/1
Horizontal busbar segregation (rear)	300	SV3080			1/1
Horizontal busbar segregation (rear)	400	SV4081			1/1
48 DIN mod. - W=1000mm					
Horizontal busbar segregation (rear)	200	SV2010			1/1
Horizontal busbar segregation (rear)	300	SV3010			1/1
Horizontal busbar segregation (rear)	400	SV4010			1/1

> Rapid selection table page 5/6 > In-depth technical information page 6/1 > Overall dimensions page 7/1

SEGREGATED STRUCTURES- Kit for switchgear with segregated frame D≥500mm

Segregation

Busbar segregation Form 3

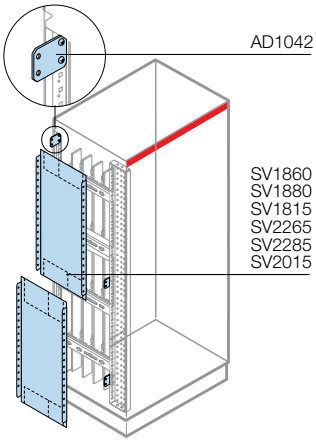

Vertical busbar segregation side

Description	Dimensions (mm) H	D	Code			Package/ No. of pieces
Vertical busbar segregation (side)	1800	500	SV1860			1/1
Vertical busbar segregation (side)		700	SV1880			1/1
Vertical busbar segregation (side)		900	SV1815			1/1
Vertical busbar segregation (side)	2000	500	SV2265			1/1
Vertical busbar segregation (side)		700	SV2285			1/1
Vertical busbar segregation (side)		900	SV2015			1/1

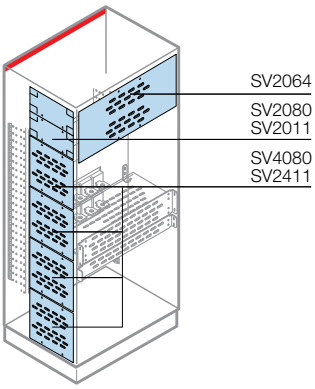

Vertical segregation Emax (side)

Description	Dimensions (mm) H	D	Code			Package/ No. of pieces
Vertical segregation Emax (side)	200	700	SV2080			1/1
Vertical segregation Emax (side)	400	700	SV4080			1/1
Vertical segregation Emax (side)	200	900	SV2011			1/1
Vertical segregation Emax (side)	400	900	SV4011			1/1

Vertical segregation Emax (rear)

Description	Dimensions (mm) H	D	Code			Package/ No. of pieces
Vertical segregation Emax (rear)	400	600	SV2064			1/1

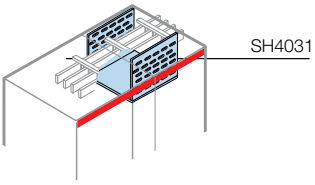

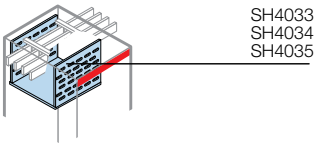

Busbar segregation in the cable container

Description	Dimensions (mm) W	D	Code			Package/ No. of pieces
Horizontal busbar segregation in internal cable container	200	500/700	SH4031			1/1
Horizontal busbar segregation in additio-nal cable container	300	500/700	SH4033			1/1
Horizontal busbar segregation in structure W=390 used as busbar container	400	500/700	SH4034			1/1
Horizontal busbar segregation in structure W=390 used as busbar container	600	500/700	SH4035			1/1

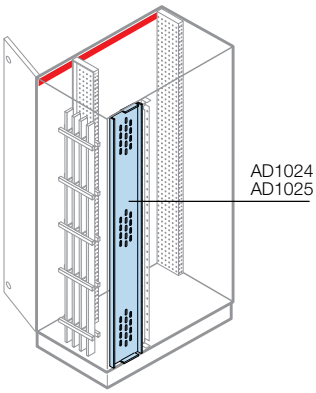

Internal cable container rear segregation

Description	Dimensions (mm) H	Code			Package/ No. of pieces
Internal cable container rear segregation	1800	AD1024			1/1
Internal cable container rear segregation	2000	AD1025			1/1

Accessories

Description	Code			Package/ No. of pieces
No.4 spacers for lateral segregation	AD1042			1/4

> Rapid selection table page 5/6 > In-depth technical information page 6/1 > Overall dimensions page 7/1

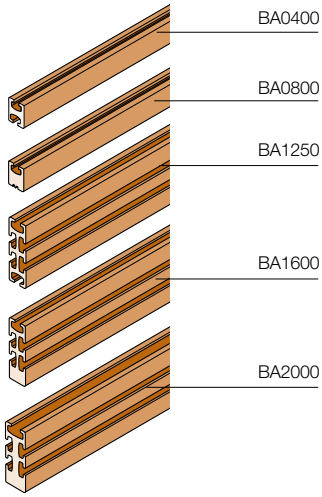

STRUCTURES WITHOUT SEGREGATION/SEGREGATED

Distribution system

Distribution busbar with shaped section

Description	Dimensions (mm) W	Code			Package/ No. of pieces
Busbar In=400A	1730	BA0400			1/1
Busbar In=800A	1730	BA0800			1/1
Busbar In=1250A	1730	BA1250			1/1
Busbar In=1600A	1730	BA1600			1/1
Busbar In=2000A (1 busbar for phase) In = 3200A (2 busbars for phase)	1730	BA2000			1/1

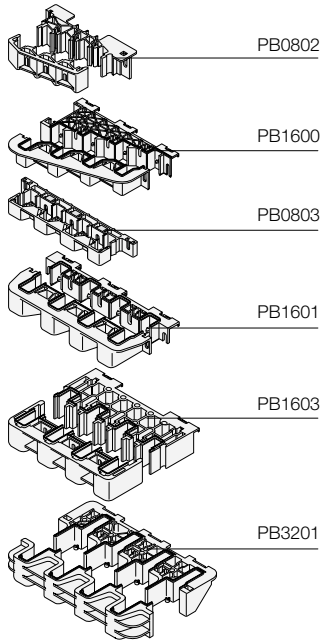

Busbar holder for shaped section

Description	Code			Package/ No. of pieces
Scaled				
Scaled busbar holder In=800A - 35kA	PB0802			1/1
Scaled busbar holder up to In=1600A - 75kA	PB1600			1/1
Linear				
Linear busbar holder In=800A - 35kA	PB0803			1/1
Linear busbar holder up to In=1600A - 75kA	PB1601			1/1
Linear busbar holder up to In=1600A - 65kA	PB1603			1/1
Linear busbar holder up to In=3200A - 100kA (1-2 busbars per phase)	PB3201			1/1

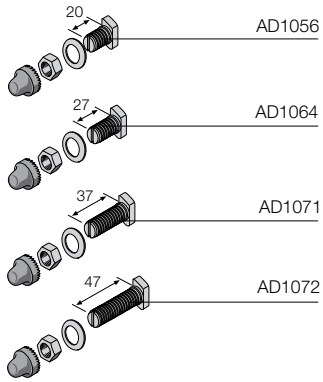

Hammer seal screws for busbars with shaped section

Description	Code			Package/ No. of pieces
No.12 M8 hammer screws W=20mm for cable terminal	AD1056			1/12
No.12 M8 screws-W=27mm for flat busbars up to 10mm, complete with screw-covering cap	AD1064			1/12
No.12 M8 screws-W=37mm for flat busbars up to 30mm, complete with screw-covering cap	AD1071			1/12
No.12 M8 screws-W=47mm for flat busbars up to 30mm, complete with screw-covering cap	AD1072			1/12

> Rapid selection table page 5/6 > In-depth technical information page 6/1 > Overall dimensions page 7/1

STRUCTURES WITHOUT SEGREGATION/SEGREGATED
Distribution system

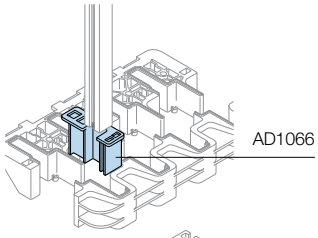

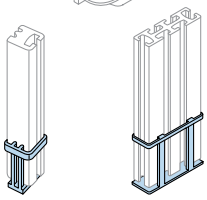

Resting bases with shaped section

Description	Code			Package/ No. of pieces
No.4 resting bases for 400/800A busbars	AD1065			1/4
No.4 resting bases for 1250/1600A busbars	AD1067			1/4

Adapters for busbars with shaped section

Description	Code			Package/ No. of pieces
No.4 adapters for In=400/800A busbars with busbar holder (PB1600-PB1601-PB1603)	AD1066			1/4

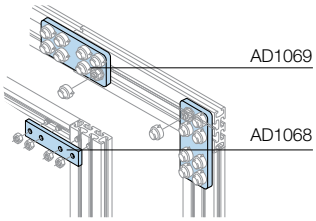

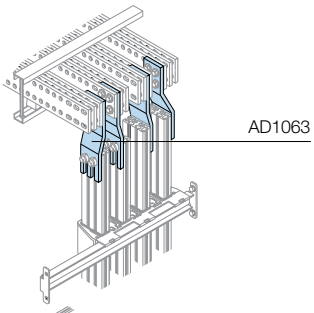

Joints for busbars with shaped section

Description	Code			Package/ No. of pieces
No.4 joints for 800A busbars with shaped section (with 800/1250/1600A busbars)	AD1068			1/4
No.4 joints for 1250/1600A busbars with shaped section (with 1250/1600/2000A	AD1069			1/4
busbars)	AD1063			1/4
No.4 joints for connecting busbars with shaped section (with rectangular pre-drilled	AD1078			1/4
busbars pitch 25mm)	AD1073			1/4
No.4 joints complete with screws for connecting busbars with shaped section up to	AD1077			1/4
3200A (with busbars with shaped section up to 1600A)				
No.4 joints complete with screws for connecting 3200A busbars with shaped section				
No.4 copper 400A branch joints				

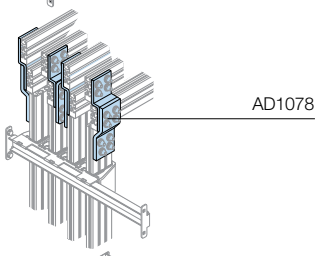

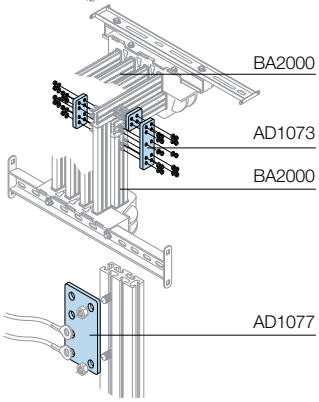

Selection of the connection joint and busbar holder compatibility

			Horizontal busbars			
			Bars with shaped section			Flat busbars
		Busbar holder	PB3201 (3200A)	PB1601 (1600/1250A)	PB1603 (1600/1250A)	BP3200 (3200A)
Vertical busbars	Bars with shaped section	PB3201 (3200A)	2xAD1069 (1) 1xAD1073 (2)			
		PB1601 (1250/1600A)	AD1078	AD1069		AD1063
		PB1603 (1250/1600A)			AD1069	
		PB1600 (1250/1600A)		AD1069		
		PB1601 (≤800A)	AD1078	AD1068		
		PB1603 (≤800A)			AD1068	

Joints valid for "T" and "L" branches.

(1) Only "L" branch

(2) Only "T" branch

> Rapid selection table page 5/6 > In-depth technical information page 6/1 > Overall dimensions page 7/1

Pic. 1

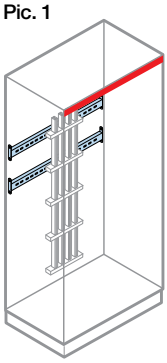

Pic. 2

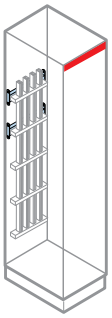

Pic. 3

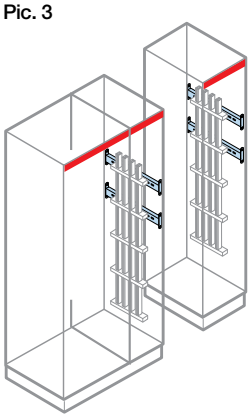

Pic. 4

Structure without segregation

Segregation structure

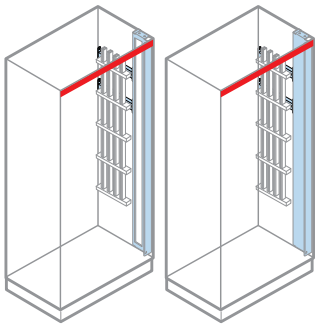

TV6001-TV8001
TV1001

TV6005-TV8005
TV1005

STRUCTURES WITHOUT SEGREGATION/SEGREGATED

Distribution system

Fixing crosspieces for busbars with shaped section

Pic. 1 - Busbars vertically on back of structure

Description	Code			Package/ No. of pieces
12 DIN mod. - W=390mm				
No.2 crosspieces structure for PB0803/PB0802	TV4001			1/2
No.2 crosspieces structure for PB1600/PB1601/PB1603	TV4000			1/2
24 DIN mod. - W=600mm				
No.2 crosspieces structure for PB0803	TV6202			1/2
No.2 crosspieces structure for PB1601/PB1603	TV6201			1/2
36 DIN mod. - W=800mm				
No.2 crosspieces structure for PB0803	TV8202			1/2
No.2 crosspieces structure for PB1601/PB1603	TV8201			1/2

Pic. 2 - Busbars vertically on back of external/internal cable container

Description	Code			Package/ No. of pieces
Internal cable container - W=200mm				
No.2 crosspieces for PB0802/PB1600	TV3201			1/2
External cable container - W=300mm				
No.2 crosspieces for PB0802	TV3000			1/2

Pic. 3 - Vertical busbars on side of the internal/external cable container

Description	Dimensions (mm) D	Code			Package/ No. of pieces
No.2 crosspieces internal cable container PB0802	225	TV3101			1/2
	300	TV5101			1/2
No.2 Internal/external cable container crosspieces for PB1600/PB1601/PB1603	500	TV6101 (1)			1/2
No.2 Internal/external cable container crosspieces for PB1600/PB1601/PB1603/PB3201	700	TV8101			1/2
	900	TV1101			1/2

(1) With PB1600 only in the additional cable container.

Pic. 4 - Busbars vertically on side of structure

Description	Dimensions (mm) P	Code			Package/ No. of pieces
No.2 crosspieces for PB1603 - open frame	500	TV6001			1/2
No.2 crosspieces for PB1603 - closed frame	500	TV6005			1/2
No.2 crosspieces for PB1600/ PB01601/PB1603/PB3201 - open frame	700	TV8001			1/2
No.2 crosspieces for PB1600/ PB01601/PB1603/PB3201 - closed frame	700	TV8005			1/2
No.2 crosspieces for PB1600/ PB01601/PB1603/PB3201 - open frame	900	TV1001			1/2
No.2 crosspieces for PB1600/ PB01601/PB1603/PB3201 - closed frame	900	TV1005			1/2

> Rapid selection table page 5/6 > In-depth technical information page 6/1 > Overall dimensions page 7/1

STRUCTURES WITHOUT SEGREGATION/SEGREGATED
Distribution system

Fixing crosspieces for busbars with shaped section

Fig. 5

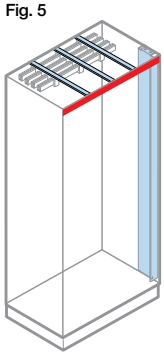

Pic. 5 - Horizontal busbars at the top under the roof or down to the bottom

Description	Dimensions (mm) D	Code			Package/ No. of pieces
No.2 crosspieces for PB1603	500	TV1261			1/2
No.2 crosspieces for PB1601/ PB1603/PB3201	700	TV8211			1/2
	900	TV8211			1/2

Fig. 6

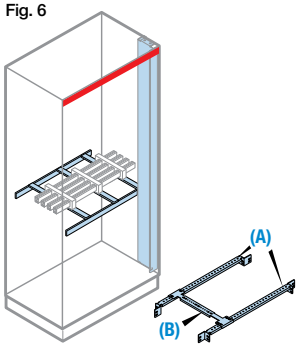

Pic. 6 - Busbar horizontal at any height

Description	Code (A)			Package/ No. of pieces
12 DIN mod. - W=390mm				
No.2 crosspieces for PB1601/PB1603	TV4221[1]			1/2
24 DIN mod. - W=600mm				
No.2 crosspieces for PB1601/PB1603/PB3201	TV6221[1]			1/2
36 DIN mod. - W=800mm				
No.2 crosspieces for PB1601/PB1603/PB3201	TV8221[1]			1/2

Description	Dimensions (mm) D	Code (B)			Package/ No. of pieces
No.2 crosspieces for PB1603	500	TV6011			1/2
No.2 crosspieces for PB1601/ PB1603/PB3201	700	TV8011			1/2
	900	TV1011			1/2

[1] With structures W=800mm with internal cable container, use a TV6221 crosspiece plus a TV8221 crosspiece as in Pic. 6a or two TV6221 crosspieces with the intermediate upright SK1880 or SK2080, as in Pic. 6b.

Pic. 6.a

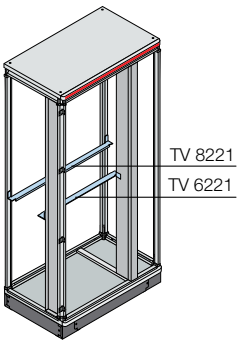

Pic. 6.b

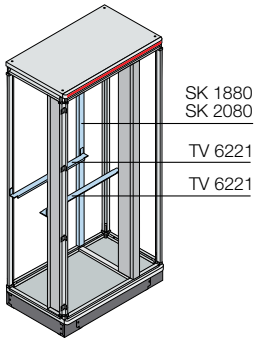

Fig. 7

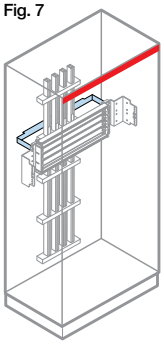

Pic. 7 - Connection to the Unifix H system

Description	Code			Package/ No. of pieces
12 DIN mod. - W=390mm				
No.2 crosspieces for PB1603	TV6203			1/2
24 DIN mod. - W=600mm				
No.2 crosspieces for PB1603	TV8203			1/2

> Rapid selection table page 5/6 > In-depth technical information page 6/1 > Overall dimensions page 7/1

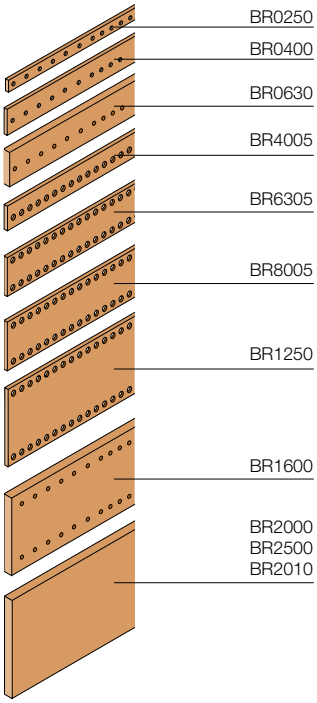

STRUCTURES WITHOUT SEGREGATION/SEGREGATED

Distribution system

Flat busbars

Description	Dimensions (mm) L	Code			Package/ No. of pieces
No.2 busbars In=250A, section 15x5mm	1750	BR0250			1/2
No.2 busbars In=400A, section 25x5mm	1750	BR0400			1/2
No.2 busbars In=630A, section 30x10mm	1750	BR0630			1/2
No.2 busbars In=400A, section 32x5mm	1750	BR4005			1/2
No.2 busbars In=630A, section 50x5mm	1750	BR6305			1/2
No.2 busbars In=800A, section 63x5mm	1750	BR8005			1/2
No.2 busbars In=1250A, section 100x5mm	1750	BR1250			1/2
No.2 busbars In=1600A, section 100x10mm	1750	BR1600			1/2
No.2 busbars In=2000A, section 120x10mm	1750	BR2000			1/2
No.2 busbars In=5000A section 160x10mm	1750	BR2500			1/2
No.2 busbars In=6300A section 200x10mm	1750	BR2010			1/2

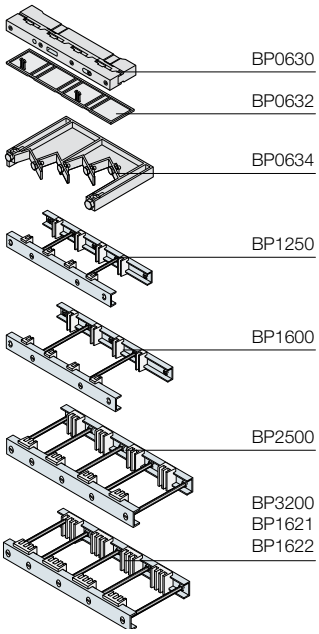

Busbar holders

Description	Code			Package/ No. of pieces
No.2 linear busbar holders In=630A - 32kA	BP0630			1/2
No.2 terminal covers for linear busbar holders BP0630	BP0632			1/2
No.2 scaled busbar holders In=630A - 23kA	BP0634			1/2
No.2 busbar holders for busbars 5mm thick	BP1250			1/2
No.2 busbar holders for busbars 10mm thick	BP1600			1/2
No.2 busbar holders for 2 busbars per phase 10mm thick	BP2500			1/2
No.2 busbar holders for 3 busbars per phase 10mm thick	BP3200			1/2
No.2 busbar holders for 3 busbars per phase 16mm	BP1621			1/2
No.2 busbar holders for 3 busbars per phase 20mm	BP1622			1/2

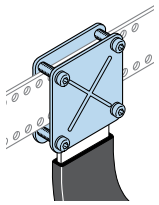

Busbar clamps

Kit for tightening the flexible busbars onto the rigid busbars, without the need to drill the flexible busbars.

Description	Code			Package/ No. of pieces
2 pairs of busbar tightening plates for busbars H=40mm	BS3250			1/4
2 pairs of busbar tightening plates for busbars H=50mm	BS5050			1/4
2 pairs of busbar tightening plates for busbars H=63mm	BS6350			1/4

> Rapid selection table page 5/6 > In-depth technical information page 6/1 > Overall dimensions page 7/1

STRUCTURES WITHOUT SEGREGATION/SEGREGATED

Distribution system

Fixing crosspieces for flat busbars

Pic. 1

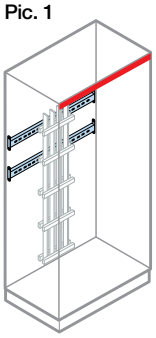

Pic. 1 - Busbars vertically on back of structure

Description	Code			Package/ No. of pieces
24 DIN mod. - W=600mm				
No.2 crosspieces for BP1250/BP1600/BP2500/ BP3200	TR7005			1/2
36 DIN mod. - W=800mm				
No.2 crosspieces for BP1250/BP1600/BP2500/ BP3200	TR8000			1/2

Pic. 2

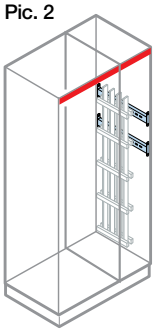

Pic. 2 - Busbars vertically on side of internal/additional cable container

Description	Dimensions (mm) D	Code			Package/ No. of pieces
No.2 crosspieces on side of cable container	500	TR6101			1/2
No.2 crosspieces on side of cable container	700	TR8101			1/2
No.2 crosspieces on side of cable container	900	TV1101			1/2

Pic. 3

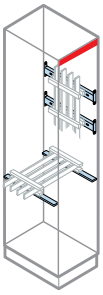

Pic. 3 - Busbar in horizontally on external cable container

Description	Dimensions (mm) D	Code			Package/ No. of pieces
No.2 Crosspieces for horizontal busbars in the cable container	500	TR6301			1/2
No.2 Crosspieces for horizontal busbars in the cable container	700	TR8301			1/2

Pic. 4

Structure without segregation

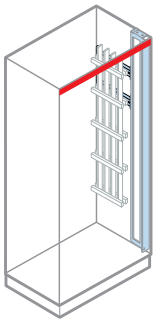

TV6001-TV8001
TV1001

Segregation structure

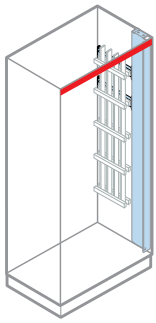

TV6005-TV8005
TV1005

Pic. 4 - Busbars vertically on side of structure

Description	Dimensions (mm) D	Code			Package/ No. of pieces
No.2 crosspieces on side of structure-open frame	500	TR6001			1/2
No.2 crosspieces on side of structure-closed frame	500	TR6005			1/2
No.2 crosspieces on side of structure-open frame	700	TR8001			1/2
No.2 crosspieces on side of structure-closed frame	700	TR8005			1/2
No.2 crosspieces on side of structure-open frame	900	TV1001			1/2
No.2 crosspieces on side of structure-closed frame	900	TV1005			1/2

> Rapid selection table page 5/6 > In-depth technical information page 6/1 > Overall dimensions page 7/1

Fig. 4

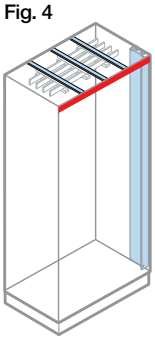

STRUCTURES WITHOUT SEGREGATION/SEGREGATED

Distribution system

Fixing crosspieces for flat busbars

Pic. 5 - Busbars horizontally at top of structure

Description	Dimensions (mm) D	Code			Package/ No. of pieces
No.2 horizontal crosspieces	500	TV1261			1/2
	700	TV8211			1/2
	900	TV1311			1/2

Fig. 6

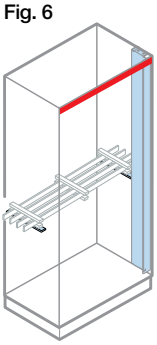

Pic. 6 - Busbars horizontally at any height in the structure

Description	Dimensions (mm) D	Code			Package/ No. of pieces
No.2 crosspieces for BP1250/ BP1600 - open frame	500	TR6201			1/2
No.2 crosspieces for BP1250/ BP1600 - closed frame	500	TR6205			1/2
No.2 crosspieces for BP1250/ BP1600/BP2500/BP3200 - open frame	700	TR8201			1/2
No.2 crosspieces for BP1250/ BP1600/BP2500/BP3200 - closed frame	700	TR8205			1/2
No.2 crosspieces for BP1250/ BP1600/BP2500/BP3200 - open frame	900	TR1201			1/2
No.2 crosspieces for BP1250/ BP1600/BP2500/BP3200 - closed frame	900	TR1205			1/2

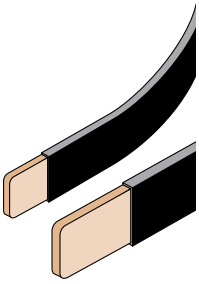

Flexible busbars

Flexible busbars insulated in self-extinguishing material.

Description	Dimensions (mm) W	In (A)	Code			Package/ No. of pieces
No.2 busbar section 20x3mm	2000	250	BF1602			1/2
No.2 busbar section 20x5mm	2000	400	BF2502			1/2
No.2 busbar section 24x6mm	2000	500	BF4002			1/2
No.2 busbar section 32x5mm	2000	630	BF4012[1]			1/2
No.2 busbar section 40x8mm	2000	1000	BF6302			1/2
No.2 busbar section 50x10mm	2000	1250	BF8002			1/2

[1] Only for circuit-breakers with front extended terminals or rear terminals.

> Rapid selection table page 5/6 > In-depth technical information page 6/1 > Overall dimensions page 7/1

STRUCTURES WITHOUT SEGREGATION/SEGREGATED

Distribution system

Unifix H

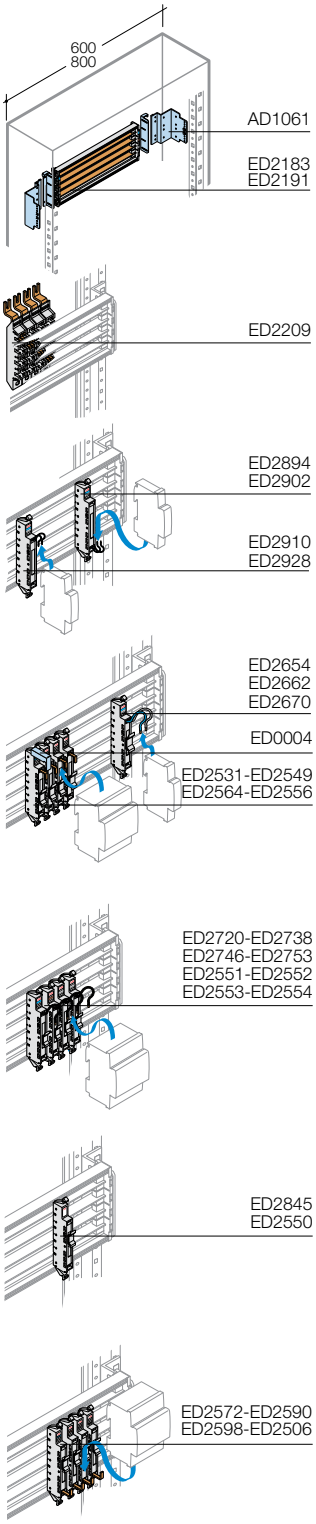

Description	Dimensions (mm) W	Code			Package/ No. of pieces
Frames for Tmax					
Frame with 24 DIN module busbar	600	ED2183			1/1
Frame with 36 DIN module busbar	800	ED2191			1/1
No.2 fixing brackets onto structure for ED2183 o ED2091		AD1061			1/2
Feeder modules					
4P 400A feeder module (for ED2183-ED2191)		ED2209			1/1
Basic modules I_n 16A					
Basic module for DIN L1-N top 16A		ED2894			1/1
Basic module for DIN L1-L2 top 16A		ED2902			1/1
Basic module for DIN L1-N bottom 16A		ED2910			1/1
Basic module for DIN L1-L2 bottom 16A		ED2928			1/1
Basic modules I_n 40A					
Basic module L1/Neutral top 40A		ED2654			1/1
Basic module L2/Neutral top 40A		ED2662			1/1
Basic module L3/Neutral top 40A		ED2670			1/1
Basic modules I_n 63A					
Basic module L1 top 63A		ED2531			1/1
Basic module L2 top 63A		ED2549			1/1
Basic module L3 top 63A		ED2556			1/1
Basic module Neutral top 63A		ED2564			1/1
Basic module L1 bottom 63A		ED2572			1/1
Basic module L2 bottom 63A		ED2590			1/1
Basic module L3 bottom 63A		ED2598			1/1
Basic module Neutral bottom 63A		ED2606			1/1
Basic modules I_n 100A					
Basic module with cable L1 top 100A		ED2720			1/1
Basic module with cable L2 top 100A		ED2738			1/1
Basic module with cable L3 top 100A		ED2746			1/1
Basic module with cable Neutral top 100A		ED2753			1/1
Basic modules ≤ I_n 40A S800					
Basic module L1 top ≤40A		ED2557			1/1
Basic module L2 top ≤40A		ED2558			1/1
Basic module L3 top ≤40A		ED2559			1/1
Basic module Neutral top ≤40A		ED2560			1/1
Basic modules ≤ I_n 125A S800					
Basic module L1 top 125A		ED2551			1/1
Basic module L2 top 125A		ED2552			1/1
Basic module L3 top 125A		ED2553			1/1
Basic module Neutral bottom 125A		ED2554			1/1
Basic module false pole W=27mm		ED2550			1/1

> Rapid selection table page 5/6 > In-depth technical information page 6/1 > Overall dimensions page 7/1

ArTu K Modular Structures
Ordering codes

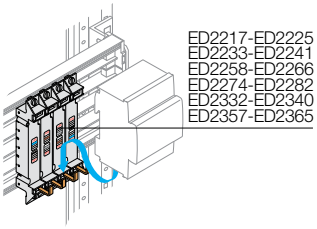

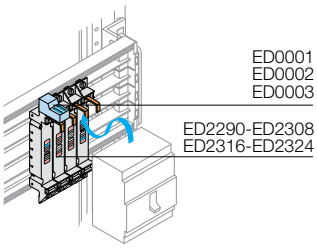

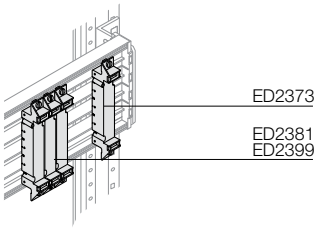

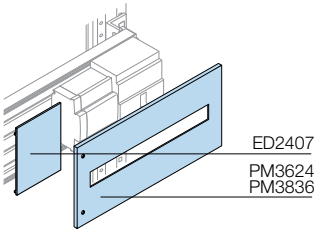

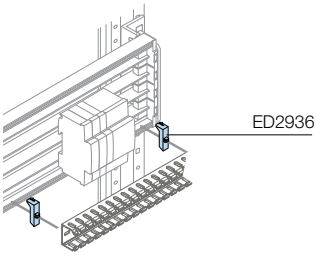

STRUCTURES WITHOUT SEGREGATION/SEGREGATED
Distribution system
Unifix H

Description	Code			Package/ No. of pieces
Basic modules ≤ I_n 160A Tmax T1, Tmax XT1				
Basic module L1 top L2 bottom	ED2217			1/1
Basic module L2 top L1 bottom	ED2225			1/1
Basic module L3 top N bottom	ED2233			1/1
Basic module N top L3 bottom	ED2241			1/1
Basic module false pole for residual current release RC221	ED2373			1/1
Basic module false pole for solenoid operator	ED2381			1/1
Basic modules ≤ I_n 160A Tmax T2				
Basic module L1 top L2 bottom	ED2258			1/1
Basic module L2 top L1 bottom	ED2266			1/1
Basic module L3 top N bottom	ED2274			1/1
Basic module N top L3 bottom	ED2282			1/1
Basic module false pole for residual current release RC221	ED2373			1/1
Basic module false pole for solenoid operator	ED2399			1/1
Basic modules ≤ I_n 250A Tmax T3, Tmax XT3				
Basic module L1 top	ED2290			1/1
Basic module L2 top	ED2308			1/1
Basic module L3 top	ED2316			1/1
Basic module N top	ED2324			1/1
Basic module L1 bottom	ED2332			1/1
Basic module L2 bottom	ED2340			1/1
Basic module L3 bottom	ED2357			1/1
Basic module N bottom	ED2365			1/1
Basic module false pole for residual current release RC221	ED2373			1/1
Accessories				
Basic module false pole for DDA	ED2845			1/1
Basic module false pole for modular MDRC	ED2852			1/1
No.2 IP20 covers (for ED2183-ED2191) W=173mm (10 DIN modules)	ED2407			1/2
No.6 duct supports 40x60mm (only for modular apparatus)	ED2936			1/6
ArTu M Kit for ED2183 and ED2191	PM3624			1/1
Modular front panel 300x600mm (HxW)	PM3836			1/1
Modular front panel 300x800mm (HxW)				
No.10 terminal covers T1	ED0001			1/10
No.10 terminal covers T2	ED0002			1/10
No.10 terminal covers T3	ED0003			1/10
No.10 terminal covers S200/F200	ED0004			1/10

> Rapid selection table page 5/6 > In-depth technical information page 6/1 > Overall dimensions page 7/1

STRUCTURES WITHOUT SEGREGATION/SEGREGATED

Distribution system

Unifix L

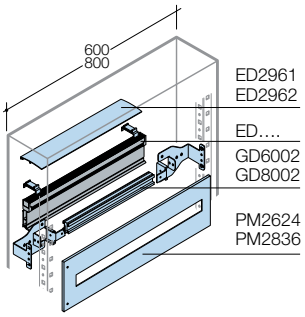

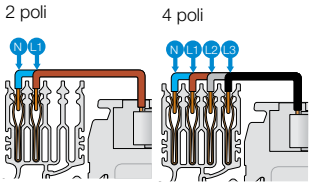

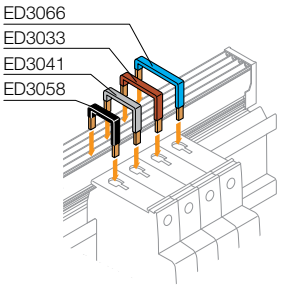

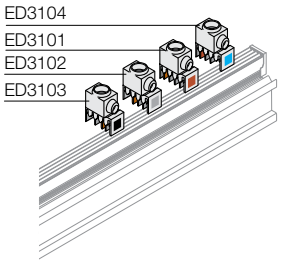

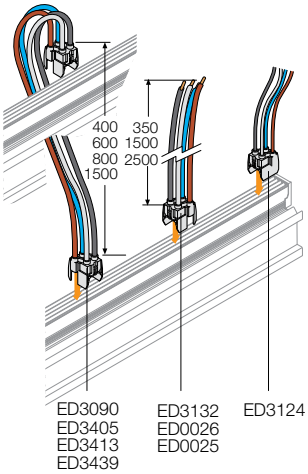

Description	Dimensions W (mm)	Code			Package/ No. of pieces
2-poles busbars					
100A 2P 8 module busbar	200	ED2985			1/6
100A 2P 12 module busbar	400	ED2993			1/6
100A 2P 18 module busbar	450	ED3009			1/6
100A 2P 24 module busbar	600	ED3017			1/6
100A 2P 36 module busbar	800	ED3025			1/6
4-poles busbars					
100A 4P 12 module busbar	400	ED2944			1/6
100A 4P 18 module busbar	450	ED2951			1/6
100A 4P 24 module busbar	600	ED2969			1/6
100A 4P 36 module busbar	800	ED2977			1/6
Connections for various apparatus					
Connection with 2 conductors L/N 16A		ED3108			1/6
Connection with 3 conductors L1/L2/L3 16A		ED3116			1/6
Connection with 4 conductors L1/L2/L3/N 16A single phase		ED3124			1/6
Connection with 2 conductors L1/N 40A		ED3355			1/6
Connection with 3 conductors L1/L2/L3 40A		ED3363			1/6
Connection with 4 conductors L1/L2/L3/N 40A		ED3371			1/6
Connections for apparatus					
No.10 connections L1-N 40 A		ED3272			1/10
No.10 connections L2-N 40 A		ED3280			1/10
No.10 connections L3-N 40 A		ED3298			1/10
No.10 connections L 1 100A		ED3033			1/10
No.10 connections L 2 100A		ED3041			1/10
No.10 connections L 3 100A		ED3058			1/10
No.10 connections N 100A		ED3066			1/10
Feeder with 4P 100A cable (W=350mm)		ED3132			1/10
Feeder with 4P 100A cable (W=1500mm)		ED0026			1/10
Feeder with 4P 100A cable (W=2500mm)		ED0025			1/10
Power supply modules with cable					
Parallel module 2P 100A with cable (W=600mm)		ED3082			1/6
Parallel module 4P 100A with cable (W=400mm)		ED3405			1/6
Parallel module 4P 100A with cable (W=600mm)		ED3090			1/6
Parallel module 4P 100A with cable (W=800mm)		ED3413			1/6
Parallel module 4P 100A with cable (W=1500mm)		ED3439			1/6
Power supply modules without cable In 100A					
No.10 single-pole power supply terminals L1		ED3101			1/10
No.10 single-pole power supply terminals L2		ED3102			1/10
No.10 single-pole power supply terminals L3		ED3103			1/10
No.10 single-pole power supply terminals N		ED3104			1/10
Accessories					
No.10 busbar covers (W=600mm)		ED2961			1/10
No.2 busbar covers (W=800mm)		ED2962			1/2
DIN rail Kit and supports (W=600mm)		GD1520			1/1
DIN rail Kit and supports (W=800mm)		GD1530			1/1
Modular front panel 200x600mm (HxW)		PM2624			1/1
Modular front panel 200x800mm (HxW)		PM2836			1/1

> Rapid selection table page 5/6 > In-depth technical information page 6/1 > Overall dimensions page 7/1

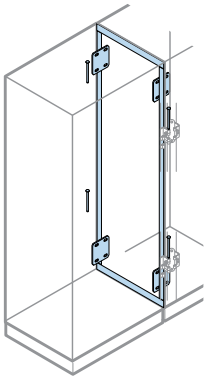

STRUCTURES WITHOUT SEGREGATION/SEGREGATED

Accessories

Structure side-by-side kit

The ArTu K switchgear can be placed side by side both laterally and at the rear. The IP65 side-by-side kit consists of a set of supports and a gasket for keeping the degree of protection. In the IP31 version, in addition to the AD1014 kit, order the double finishing section (see page 5/59).

Description	Code			Package/ No. of pieces
Kit for placing structures H=1600-1800-2000mm side by side laterally	AD1014			1/1

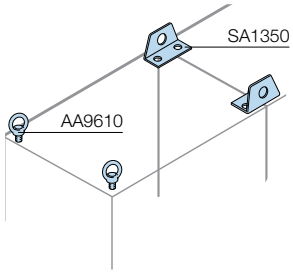

Lifting eyebolts

These allow cabled switchgear to be lifted. They are made of steel treated with white passivated galvanisation.

Description	Code			Package/ No. of pieces
No.4 steel M12 lifting eyebolts	AA9600			1/4

Lifting reinforcements

These allow handling of several ArTu K switchgear placed side by side.

Description	Code			Package/ No. of pieces
lifting reinforcements for side-by-side structures	SA1350			1/2

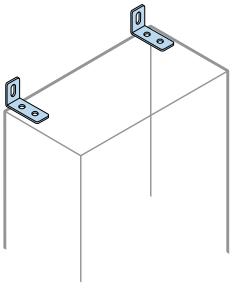

Brackets for fixing to the wall

Allow fixing of ArTu K switchgears to the wall.

Description	Code			Package/ No. of pieces
No.2 brackets for fixing to the wall	AD1808			1/2

> Rapid selection table page 5/6 > In-depth technical information page 6/1 > Overall dimensions page 7/1

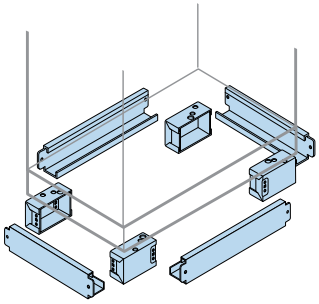

STRUCTURES WITHOUT SEGREGATION/SEGREGATED

Accessories

Additional base strip H=100mm

Base strip for structure

Description	Dimensions (mm) D	Code			Package/ No. of pieces
12 DIN mod. - W=390mm					
No.4 base strip + No.4 flanges	225	ZD2440			1/8
No.4 base strip + No.4 flanges	300	ZD2450			1/8
No.4 base strip + No.4 flanges	500	ZD2460			1/8
No.4 base strip + No.4 flanges	700	ZD2480			1/8
No.4 base strip + No.4 flanges	900	ZD4010			1/8
24 DIN mod. - W=600mm					
No.4 base strip + No.4 flanges	150	ZD2624			1/8
No.4 base strip + No.4 flanges	225	ZD2640			1/8
No.4 base strip + No.4 flanges	300	ZD2650			1/8
No.4 base strip + No.4 flanges	500	ZD2660			1/8
No.4 base strip + No.4 flanges	700	ZD2680			1/8
No.4 base strip + No.4 flanges	900	ZD6010			1/8
36 DIN mod. - W=800mm					
No.4 base strip + No.4 flanges	150	ZD2824			1/8
No.4 base strip + No.4 flanges	225	ZD2840			1/8
No.4 base strip + No.4 flanges	300	ZD2850			1/8
No.4 base strip + No.4 flanges	500	ZD2860			1/8
No.4 base strip + No.4 flanges	700	ZD2880			1/8
No.4 base strip + No.4 flanges	900	ZD8010			1/8

Base strip for cable container external

Description	Dimensions (mm) D	Code			Package/ No. of pieces
Vano cavi esterno W=300mm					
No.4 base strip + No.4 flanges	150	ZD2324			1/8
No.4 base strip + No.4 flanges	225	ZD2340			1/8
No.4 base strip + No.4 flanges	300	ZD2350			1/8
No.4 base strip + No.4 flanges	500	ZD2361			1/8
No.4 base strip + No.4 flanges	700	ZD2381			1/8

Base strip angle

To make a 200mm high base strip, order a H=100mm kit, which includes four additional angle pieces and four additional flanges.

Description	Dimensions (mm) H	Code			Package/ No. of pieces
W=300mm					
No.4 base strip angle pieces	100	AZ4000			1/4

> Rapid selection table page 5/6 > In-depth technical information page 6/1 > Overall dimensions page 7/1

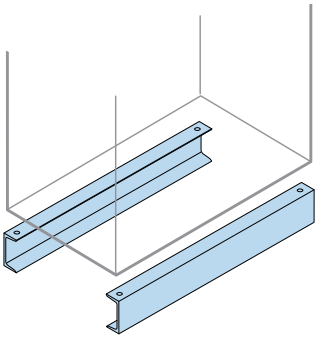

STRUCTURES WITHOUT SEGREGATION/SEGREGATED

Accessories

Reinforced base strip H=100mm

Description	Code			Package/ No. of pieces
12 DIN mod. - W=390mm				
Front and rear profile	ZR4000			1/2
24 DIN mod. - W=600mm				
Front and rear profile	ZR6000			1/2
36 DIN mod. - W=800mm				
Front and rear profile	ZR8000			1/2
Additional cable container - W=300mm				
Front and rear profile	ZR3000			1/2

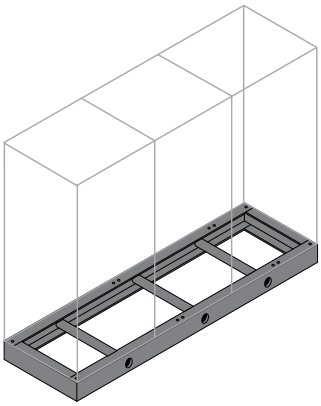

One-piece quake-proof base compartment

Base compartment in a single piece with reinforcing tubes installed at depth. Allows adjacent switchgear accessorized with particularly heavy components to be lifted. Height 100 mm, length up to 6 meters. RAL7012 grey colour with orange-peel finish. The number of reinforcing tubes depends on the length of the bank.

Description	Code			Package/ No. of pieces
One-piece base compartment H=100 mm for adjacent switchgear	ZK1100			1/1

- Must be designed in a special dedicated way for each configuration. Always attach the drawing of the front view of the switchgear bank and specify the width, depth and switchgear sequence of each column.
- Unit of measurement for ordering: METER.
- Available in lengths of up to 6 m.

> Rapid selection table page 5/6 > In-depth technical information page 6/1 > Overall dimensions page 7/1

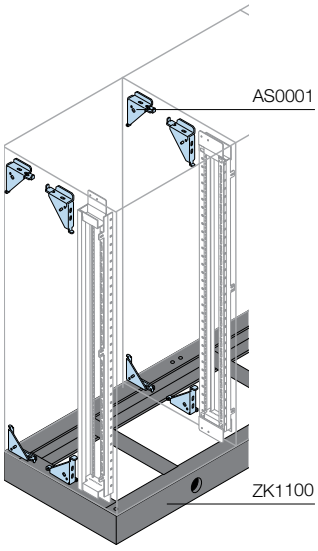

STRUCTURES WITHOUT SEGREGATION/SEGREGATED

Accessories

Kits for seismic hazard zones

Anti-quake tests performed

The tests provide a reference for comparison with dimensionally similar configurations and with regard to the load distributed within them. They concern 3 columns measuring 2 x 2231x910x636 mm (including base compartment) + 1 x2231x720x636 mm (including base compartment). Total length=2540 mm with busbar system and internal electrical components weighing about 1,500 kg (fig.1), and points for fixing to the floor with M12 bolts.

The switchgear was tested in accordance with standard IEC 60068-2-57 “Environmental testing Part. 2: Test method. Vibration - Time history method” and standard IEE Std 693 “Recommended Practice for Seismic Design of Substation”.

Similar fields of use*

Cabinet without specific accessories			
According to standards IEC 60068-2-57 - IEEE Std 693	According to Seismic Zone IEC 68-3-3	Magnitude according to Richter scale	Intensity according to Mercalli scale
Resistance capacity up to 0.5 g	Zone 4	7	9

Cabinet with specific accessories AS0001 + reinforced base compartment			
According to standards IEC 60068-2-57 - IEEE Std 693	According to Seismic Zone IEC 68-3-3	Magnitude according to Richter scale	Intensity according to Mercalli scale
Resistance capacity up to 0.75 g	Zone 4	7,5	10

* The references to the intensity scales are indicative.

Product codes for creating structures for seismic hazard zones

The product reaches 0.75 g resistance capacity with special base compartment ZK1100 and kit AS0001 comprising 12 reinforcing plates. Reinforced base compartment ZR… can be used as an alternative to the one-piece base compartment.

Description	Code			Package/ No. of pieces
No.12 (twelve) anti-quake reinforcing plates	AS0001			1/12
Reinforced base compartment H=100 mm (see above)	ZR....			1/1

The segregation partitions replace the reinforcing kit.

> Rapid selection table page 5/6 > In-depth technical information page 6/1 > Overall dimensions page 7/1

Pic. 1

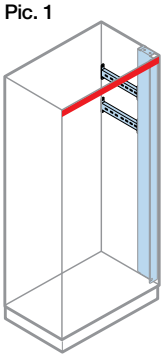

Pic. 2

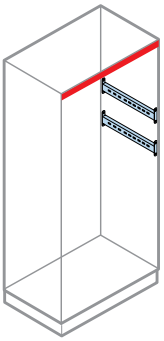

Pic. 3

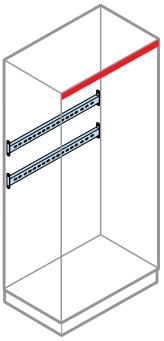

Pic. 4

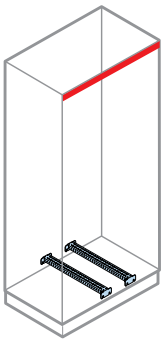

STRUCTURES WITHOUT SEGREGATION/SEGREGATED

Accessories

Crosspieces for accessories

Can be mounted on the structure to anchor cables or to mount accessories. The crosspieces for accessories can be mounted on the side, on the rear or in the cable container of the structure.

STRUCTURES WITHOUT SEGREGATION
Side crosspieces

Description	Dimensions (mm) D	Mounting position Pic.	Code			Package/ No. of pieces
No.2 side crosspieces	500	1	TR6001			1/2
No.2 side crosspieces	700	1	TR8001			1/2

SEGREGATED STRUCTURES
Side crosspieces

Description	Dimensions (mm) D	Mounting position Pic.	Code			Package/ No. of pieces
No.2 side crosspieces	500	1	TR6005			1/2
No.2 side crosspieces	700	1	TR8005			1/2

STRUCTURES WITHOUT SEGREGATION/SEGREGATED
Side crosspieces

Description	Dimensions (mm) D	Mounting position Pic.	Code			Package/ No. of pieces
No.2 side crosspieces	225	2	TR4101			1/2
No.2 side crosspieces	300	2	TV5101			1/2
No.2 side crosspieces	500	2	TR6101			1/2
No.2 side crosspieces	700	2	TR8101			1/2

STRUCTURES WITHOUT SEGREGATION/SEGREGATED
Rear crosspieces

Description	Dimensions (mm) W	Mounting position Pic.	Code			Package/ No. of pieces
No.2 rear crosspieces	600	3	TR7005			1/2
No.2 rear crosspieces	800	3	TR8000			1/2

STRUCTURES WITHOUT SEGREGATION/SEGREGATED
Reinforcement crosspieces
Recommended for installation of fuse bases or transformers.

Description	Dimensions (mm) D	Mounting position Pic.	Code			Package/ No. of pieces
No.2 reinforcement crosspieces	225	4	TR8400			1/2
No.2 reinforcement crosspieces	300	4	TR8500			1/2
No.2 reinforcement crosspieces	500	4	TR8600			1/2
No.2 reinforcement crosspieces	700	4	TR8800			1/2
No.2 reinforcement crosspieces	900	4	TR8900			1/2

> Rapid selection table page 5/6 > In-depth technical information page 6/1 > Overall dimensions page 7/1

STRUCTURES WITHOUT SEGREGATION/SEGREGATED

Accessories

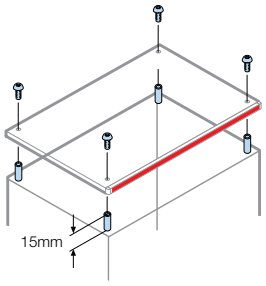

Roof ventilation

Allows the roof of the cabinet to be raised thereby increasing ventilation and therefore the power which can be dissipated. The degree of protection is IP20. The ventilation kit must not be mounted if the cabinet has to be lifted using the eyebolts. In this case, the kit must be mounted when installation has been completed.

Description	Code			Package/ No. of pieces
No.4 Roof ventilation kit	AD1015			1/4

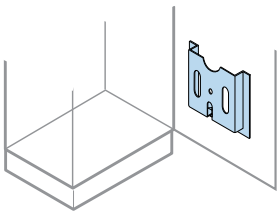

Diagram pocket holder

The diagram pocket holder (made of RAL 2004 colour plastic, dim. HxL 237x265mm type A4) is applied to the inside of doors/blind panels of suitable size using the adhesive provided.

Description	Code			Package/ No. of pieces
Plastic diagram pocket holder	AA5600			1/1

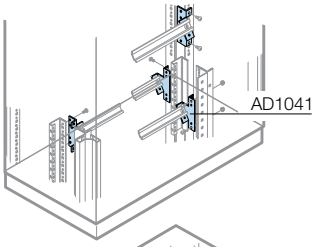

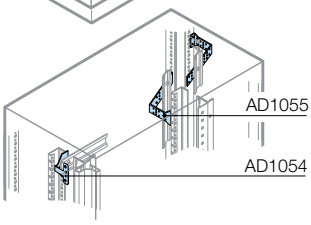

Supports for terminal boxes

Description	Code			Package/ No. of pieces
Structure				
No. 2 supports for horizontal 45° angled terminal box for ArTu K	AD1041			1/2
No. 2 supports for horizontal terminal box for ArTu K	AD1054			1/2
Additional cable container				
No. 4 supports for vertical terminal box in internal/ additional ArTu K cable container	AD1055			1/4

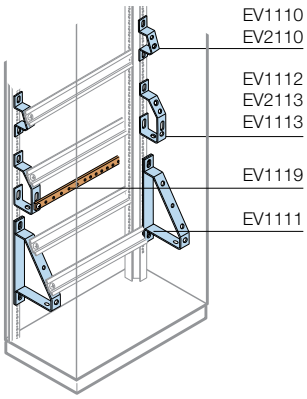

Angled supports for terminal boxes and earthing busbars

Description	Code			Package/ No. of pieces
No.50 angled supports 1 row of terminals	EV1110			1/50
No.10 angled supports 1 row of terminals	EV2110			1/10
No.10 angled supports double row of terminals	EV1111			1/10
No.50 angled supports 1 row of terminals + earth	EV1112			1/50
No.10 angled supports 1 row of terminals + earth	EV2112			1/10
No.2 angled supports 1 row of terminals + earth	EV1113			1/2

Insulators and copper busbars for neutral/earthing

Description	Code			Package/ No. of pieces
No.2 busbars 20x5 mm drilled and threaded M6*	EV1122			1/50
No.2 busbars 25x5 mm drilled and threaded M6*	EV1123			1/50
No.2 busbars 50x5 mm drilled and threaded M6*	EV1124			1/25
No.50 hexagonal insulators 30x30mm M6	EV1125			1/25
No.50 hexagonal insulators 30x30mm M8	EV1122			1/50
No.50 hexagonal insulators 36x50mm M6	EV1123			1/50
No.50 hexagonal insulators 36x50mm M8	EV1124			1/25
No.25 isolatori esagonali 36x50mm M8	EV1125			1/25

* Length 2000mm

> Rapid selection table page 5/6 > In-depth technical information page 6/1 > Overall dimensions page 7/1

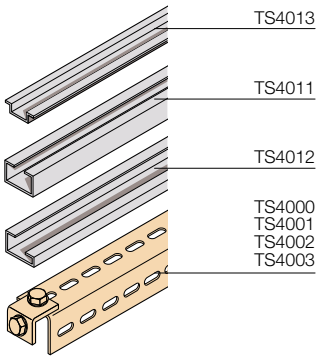

STRUCTURES WITHOUT SEGREGATION/SEGREGATED

Accessories

Sections for accessories

Description	Dimensions (mm) W	Code			Package/ No. of pieces
No.2 sections EN50024 C30	2000	TS4011			1/2
No.2 sections EN50035 G32	2000	TS4012			1/2
No.2 DIN sections EN50022	2000	TS4013			1/2
No.2 cable rails	600	TS4000			1/2
No.2 cable rails	800	TS4001			1/2
No.2 cable rails	1000	TS4002			1/2
No.2 cable rails	1200	TS4003			1/2

5

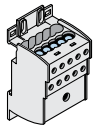
AD1080

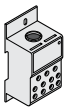
AD1081

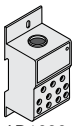
AD1030
AD1031

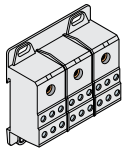
AD1075
AD1006

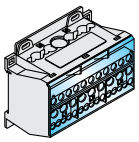
AD1004

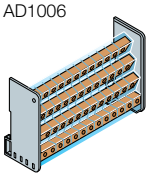
AD1028
AD1029

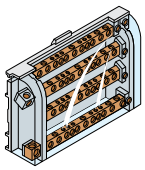
AD1027

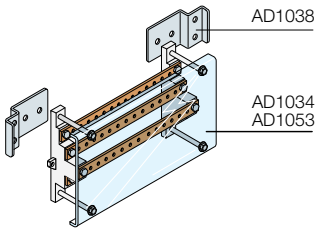

Dividers

Description		Code			Package/ No. of pieces
Single-pole					
Modular 125A	UL	AD1076 (1)			1/1
Modular 125A	UL	AD1080 (2)			1/1
Modular 175A	UL	AD1007 (1)			1/1
Modular 175A	UL	AD1081 (2)			1/1
Modular 250A	UL	AD1030			1/1
Modular 125A	UL	AD1031			1/1
Modular 160A	UL	AD1027			1/1
Three-pole					
Modular 125A	UL	AD1075			1/1
Modular 175A	UL	AD1006			1/1
Four-pole					
Modular 125A		AD1004			1/1
Modular 125A-medium-93x89x48 (HxLxP)		AD1028			1/1
Modular 125A-large-96x126x48 (HxLxP)		AD1029			1/1
Modular 160A		AD1027			1/1
Horizontal 250A for structures W=600mm		AD1034			1/1
Horizontal 250A for structures W=800mm		AD1053			1/1

(1) 10 outputs - (2) 6 outputs

Mounting accessories

Description	Code			Package/ No. of pieces
Supports for fixing to the structure for AD1034 and AD1053	AD1035			1/1
Connection accessory between two AD1080	AD1083			1/1

> Rapid selection table page 5/6 > In-depth technical information page 6/1 > Overall dimensions page 7/1

STRUCTURES WITHOUT SEGREGATION/SEGREGATED

Accessories

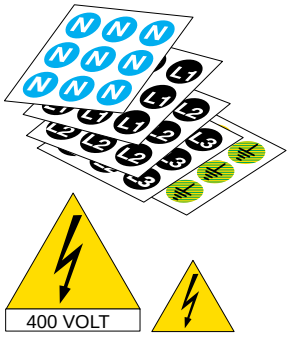

Marking

Description	Code			Package/ No. of pieces
No.490 adhesive labels ø12mm symbol N	EV1150			1/490
No.490 adhesive labels ø12mm symbol L1	EV1151			1/490
No.490 adhesive labels ø12mm symbol L2	EV1152			1/490
No.490 adhesive labels ø12mm symbol L3	EV1153			1/490
No.490 adhesive labels ø12mm symbol T	EV1154			1/490
No.10 triangular adhesive labels 125mm with 400V lightning arrow symbol	EV1155			1/10
No.300 triangular adhesive labels 50mm with lightning arrow symbol	EV1156			1/300

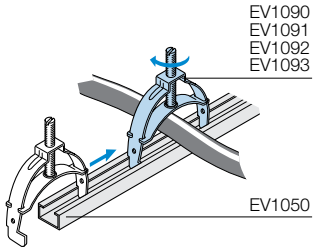

Brackets for anchoring cables

Adjustable cable blocking bracket can be mounted on sections with 10mm slot EV1050.

Description	Code			Package/ No. of pieces
No.10 cable blocking brackets min÷max ø 9÷16mm	EV1090			1/10
No.10 cable blocking brackets min÷max ø 16÷30mm	EV1091			1/10
No.5 cable blocking brackets min÷max ø 30÷48mm	EV1092			1/5
No.5 cable blocking brackets min÷max ø 48÷72mm	EV1093			1/5

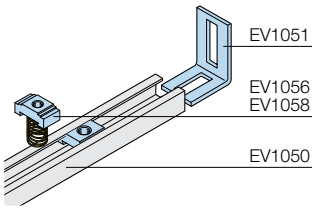

Aluminium sliding guides for universal uses

Description	Code			Package/ No. of pieces
No.10 aluminium supporting sections 30x15 – W=2000mm	EV1050			1/10
No.25 fixing brackets for EV1050	EV1051			1/25
No.100 aluminium M6 nuts for EV1050	EV1056			1/100
No.100 aluminium M8 nuts for EV1050	EV1058			1/100

> Rapid selection table page 5/6 > In-depth technical information page 6/1 > Overall dimensions page 7/1

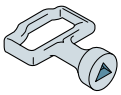
AA1560

AA6120

AA6200

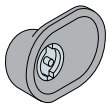
EV1008

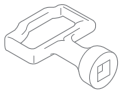

AA6140

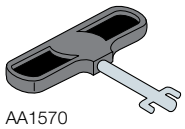
AA1570

AA6160

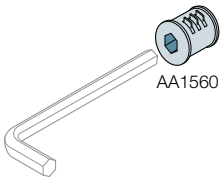
AA1560

STRUCTURES WITHOUT SEGREGATION/SEGREGATED

Accessories

Inserts and keys

Description	Code			Package/ No. of pieces
Cable container				
Box+ Yale insert (without tab)	EV1008			1/1
Insert + Yale key for EV1008	EV1036			1/1
Ronis 455 insert + key for EV1008	EV1037			1/1
3mm double-tab insert + key for EV1008	EV1039			1/1
Structures				
Double-tab insert	AA6100			1/1
Double-tab Zn+Al+Mg alloy key	AD1058			1/1
Yale insert + key	AA6200			1/1
Male 6.4 triangular insert on ø 7.6	AA6120			1/1
Triangular key	AA1560			1/1
Male 7square type insert; key not available	AA6140			1/1
Hexagonal 8 type insert embedded; key not available	AA6180			1/1
FIST type insert (FIAT)	AA6160			1/1
Fiat key	AA1570			1/1
Ronis E739 insert + key	AA8004			1/1

> Rapid selection table page 5/6 > In-depth technical information page 6/1 > Overall dimensions page 7/1

STRUCTURES WITHOUT SEGREGATION/SEGREGATED
Accessories
Spare parts

Description	Code			Package/ No. of pieces
No.10 hinges + screws for panels (spare part ACP468)	AD1090			1/10
No.10 plug + door key kits (spare part APT002)	AD1091			1/10
No.5 FP fixing accessories H=1800/2000mm (spare part A210)	AD1092			1/5
Chimes for door H=1600mm (spare part)	CA1600			1/1
Chimes for door H=1800mm (spare part)	CA1800			1/1
Chimes for door H=2000mm (spare part)	CA2000			1/1
No.2 DIN rail fixing brackets for open frame (switchgear without segregation)	AD1047			1/2
No.2 DIN rail fixing brackets for closed frame (segregated switchgear)	AD1048			1/2
ArTu Survival Kit" - Accessories and small items for spare parts	AD1057			1/1
No.10 ArTu handle covers	AD1070			1/10
ArTu handle complete with lock and cover	AD1022			1/1
No.4 base strip angle pieces H=100mm	AZ4000			1/4
Internal finishing tape for IP31 Ral 7035 colour	AD1001			1/1
No.20 cage nuts	AD1036			1/20
No.50 three-lobed M6 spare screws	AD1033			1/50
RAL 7035 colour spray paint for touching up (400 ml spray can)	VB7035			1/1
Polished flange for XT1 3P mounted on DIN rail	AD3301			1/1
Polished flange for XT1 4P mounted on DIN rail	AD3302			1/1
Polished flange for XT3 3P mounted on DIN rail	AD3303			1/1
Polished flange for XT3 4P mounted on DIN rail	AD3304			1/1

> Rapid selection table page 5/6 > In-depth technical information page 6/1 > Overall dimensions page 7/1

ArTu K Modular Structures
Examples of configurations

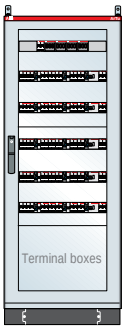

ArTu K Series dim. 1600x500x150 (1831x748x287) mm (external hxwxd) IP65 with modular panels

5

Code	Description	Q.ty
AD1808	No.2 wall fixing brackets, K	1
GD6002	DIN rail Kit without segreg.24 mod. w=600mm, K	6
LF1626	No.2 side panels 1600x250mm (hxd) K	1
PC4600	Blind panel 400x600mm (hxw) M, K	1
PM6672	Panel 72 mod. 600x600mm (hxw) M, K	2
PV1661	Glass door 1600x600mm (hxw) K	1
RF1660	Rear panel 1600x600mm (hxw) K	1
SK1600	No.4 ArTu K uprights h=1600mm	1
SK1604	No.2 reduced funct. frames h=1600mm K d=250mm	1
SK6025	ArTu K Base/Top/Base strip 600x250mm (wxd)	1

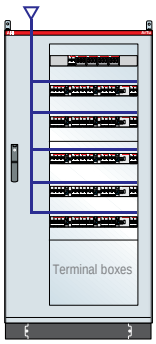

ArTu K Series dim. 1600x800x150 (1831x948x287) mm (external hxwxd) IP65 with modular panels

Code	Description	Q.ty
AD1808	No.2 wall fixing brackets, K	1
GD6002	DIN rail Kit without segreg.24 mod. w=600mm, K	6
LF1626	No.2 side panels 1600x250mm (hxd) K	1
PC4600	Blind panel 400x600mm (hxw) M, K	1
PM6672	Panel 72 mod. 600x600mm (hxw) M, K	2
PV1681	Glass door 1600x600mm (hxw) K	1
RF1680	Rear panel 1600x600mm (hxw) K	1
SK1600	No.4 ArTu K uprights h=1600mm	1
SK8025	ArTu K Base/Top/Base strip 800x250mm (wxd)	1
VC1624	Int. reduced cable cont.1600x250mm (hxd) K	1

> Rapid selection table page 5/6 > In-depth technical information page 6/1 > Overall dimensions page 7/1

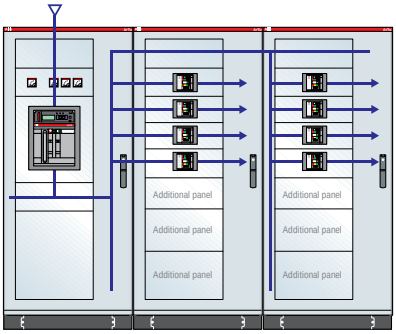

ArTu K Series dim. 1600x800x150 (1831x948x287) mm (external hxwxd) IP65 with plate for Tmax T5 and modular panels

Code	Description	Q.ty
AD1808	No.2 wall fixing brackets, K	1
GD8002	DIN rail Kit without segreg.24 mod. w=600mm, K	4
KL5114	Hor. fixed T5 Kit 300x800mm(hxw) M,K	1
LF1626	No.2 side panels 1600x250mm (hxd) K	1
PC2800	Blind panel 200x800mm (hxw) M, K	1
PC3800	Blind panel 300x800mm (hxw) M, K	1
PM2836	Panel 36 mod. 200x800mm (hxw) M, K	4
PV1682	Glass door 36 mod. 1600x800mm (hxw) K	1
RF1680	Rear panel 1600x800mm (hxw) K	1
SK1600	No.4 ArTu K uprights h=1600mm	1
SK1604	No.2 reduced funct. frames h=1600mm K d=250mm	1
SK8025	ArTu K Base/Top/Base strip 800x250mm (wxd)	1

> Rapid selection table page 5/6 > In-depth technical information page 6/1 > Overall dimensions page 7/1

ArTu K Modular Structures
Examples of configurations

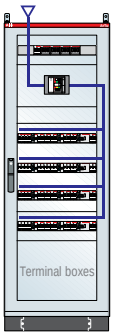

5

ArTu K Series dim. 1800x600x150 (2031x748x287) mm (external hxwxd) IP65 with plate for Tmax T5 and modular panels, complete with 400A busbars vertically on back of structure - Icw max 35kA

Code	Description	Q.ty
AD1808	No.2 wall fixing brackets, K	1
BA0400	Busbar In=400A	4
GD6002	DIN rail Kit without segreg. 24 mod. w=600mm, K	5
KT5112	Hor. fixed T5 Kit 300x600mm(hxw) M,K	1
LF1826	No.2 side panels 1800x250mm (hxd) K	1
PB0803	Linear busbar holder In=800A (35kA)	5
PC1600	Blind panel 100x600mm (hxw) M, K	1
PC4600	Blind panel 400x600mm (hxw) M, K	1
PM2624	Panel 24 mod. 200x600mm (hxw) M, K	2
PM6672	Panel 72 mod. 600x600mm (hxw) M, K	1
PV1861	Glass door 1800x600mm (hxw) K	1
RF1860	Rear panel 1800x600mm (hxw) K	1
SK1800	No.4 ArTu K uprights h=1800mm	1
SK1804	No.2 reduced funct. frames h=1800mm K d=250mm	1
SK6025	ArTu K Base/Top/Base strip 600x250mm (wxd)	1
TV6202	No.2 rear of struct. crosspieces w=600xPB0803	3

> Rapid selection table page 5/6 > In-depth technical information page 6/1 > Overall dimensions page 7/1

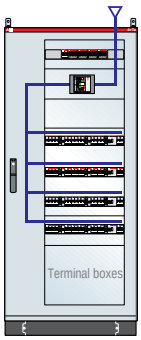

ArTu K Series dim. 1800x800x150 (2031x948x287) mm (external hxwxd) IP65 with plate for Tmax T3-XT3 and modular panels, complete with 800A busbars vertically on back of internal cable cont. - Icw max 35kA

Code	Description	Q.ty	Code	Description	Q.ty
Tmax T kit			**Tmax XT kit**		
AD1808	Rear panel 1800x800mm (hxw) K	1	AD1808	Rear panel 1800x800mm (hxw) K	1
BA0800	Busbar In=800A	4	BA0800	Busbar In=800A	4
GD6002	DIN rail Kit without segreg. 24 mod. w=600mm, K	5	GD6002	DIN rail Kit without segreg. 24 mod. w=600mm, K	5
KT3112	T3 3/4P horiz. fixed without segreg. Kit M, K250	1	KX3612	XT3 3/4P horiz. fixed without segreg. Kit M, K250	1
LF1826	No.2 pann. later. 1800x150mm (hxp) K	1	LF1826	No.2 pann. later. 1800x150mm (hxp) K	1
PB0802	Scaled busbar holder In=800A (35 kA)	5	PB0802	Scaled busbar holder In=800A (35 kA)	5
PC2600	Blind panel 200x600mm (hxw) M, K	1	PC2600	Blind panel 200x600mm (hxw) M, K	1
PC4600	Blind panel 400x600mm (hxw) M, K	1	PC4600	Blind panel 400x600mm (hxw) M, K	1
PM2624	Panel 24 mod. 200x600mm (hxw) M, K	2	PM2624	Panel 24 mod. 200x600mm (hxw) M, K	2
PM6672	Panel 72 mod. 600x600mm (hxw) M, K	1	PM6672	Panel 72 mod. 600x600mm (hxw) M, K	1
PV1881	Glass door 1800x800mm (hxw) K	1	PV1881	Glass door 1800x800mm (hxw) K	1
RF1880	Rear panel 1800x800mm (hxw) K	1	RF1880	Rear panel 1800x800mm (hxw) K	1
SK1800	No.4 ArTu K uprights h=1800mm	1	SK1800	No.4 ArTu K uprights h=1800mm	1
SK8025	ArTu K Base/Top/Base strip 800x250mm (wxd)	1	SK8025	ArTu K Base/Top/Base strip 800x250mm (wxd)	1
TV3000	No.2 int. cable cont. cross. w=200mm x K d=250mm	3	TV3000	No.2 int. cable cont. cross. w=200mm x K d=250mm	3
VC1824	Int. reduced cable cont.1800x250mm (hxd) K	1	VC1824	Int. reduced cable cont.1800x250mm (hxd) K	1

> Rapid selection table page 5/6 > In-depth technical information page 6/1 > Overall dimensions page 7/1

ArTu K Modular Structures
Examples of configurations

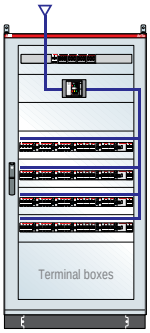

5

ArTu K Series dim. 1800x800x150 (2031x948x287) mm (external hxwxd) IP65 with plate for Tmax T3-XT3 and modular panels, complete with 800A busbars vertically on back of internal cable cont. - Icw max 35kA

Code	Description	Q.ty	Code	Description	Q.ty
Tmax T kit			**Tmax XT kit**		
AD1808	Rear panel 1800x800mm (hxw) K	1	AD1808	Rear panel 1800x800mm (hxw) K	1
BA0800	Busbar In=800A	4	BA0800	Busbar In=800A	4
GD8002	DIN rail Kit without segreg.36 mod. w=800mm, K	5	GD8002	DIN rail Kit without segreg.36 mod. w=800mm, K	5
KL3113	T3 3/4P horiz. fixed without segreg. Kit w=800mm M,	1	KL3613	XT3 3/4P horiz. fixed without segreg. Kit w=800mm M, K250	1
LF1826	No.2 side panels 1800x250mm (hxd) K	1	LF1826	No.2 side panels 1800x250mm (hxd) K	1
PB0803	Linear busbar holder In=800A (35kA	5	PB0803	Linear busbar holder In=800A (35kA	5
PC2800	Blind panel 200x800mm (hxw) M, K	1	PC2800	Blind panel 200x800mm (hxw) M, K	1
PC4800	Blind panel 400x800mm (hxw) M, K	1	PC4800	Blind panel 400x800mm (hxw) M, K	1
PM2836	Panel 36 mod. 200x800mm (hxw) M, K	5	PM2836	Panel 36 mod. 200x800mm (hxw) M, K	5
PV1882	Glass door 36 mod. 1800x800mm (hxw) K	1	PV1882	Glass door 36 mod. 1800x800mm (hxw) K	1
RF1880	Rear panel 1800x800mm (hxw) K	1	RF1880	Rear panel 1800x800mm (hxw) K	1
SK1800	No.4 ArTu K uprights h=1800mm	1	SK1800	No.4 ArTu K uprights h=1800mm	1
SK1804	No.2 reduced funct. frames h=1800mm K d=250mm	1	SK1804	No.2 reduced funct. frames h=1800mm K d=250mm	1
SK8025	ArTu K Base/Top/Base strip 800x250mm (wxd)	1	SK8025	ArTu K Base/Top/Base strip 800x250mm (wxd)	1
TV8202	No.2 rear of struct. crosspieces w=800xPB0803	3	TV8202	No.2 rear of struct. crosspieces w=800xPB0803	3

> Rapid selection table page 5/6 > In-depth technical information page 6/1 > Overall dimensions page 7/1

ArTu K Series dim. 2000x600x150 (2131x748x287) mm (external hxwxd) IP65 with plate for Tmax T5-630A and modular panels, complete with 400A busbars vertically on back of structure - Icw max 35kA

Code	Description	Q.ty
AD1808	No.2 wall fixing brackets, K	1
BA0400	Busbar In=400A	4
GD6008	DIN rail Kit int. 150mm w=600mm M floor-mount. K	4
KT5112	Hor. fixed T5 Kit 300x600mm(hxw) M,K	1
LF2026	No.2 side panels 2000x250mm (hxd) K	1
PB0803	Linear busbar holder In=800A (35kA)	5
PC2600	Blind panel 200x600mm (hxw) M, K	1
PC3600	Blind panel 300x600mm (hxw) M, K	1
PM3648	Panel 48 mod. 300x600mm (hxw) M, K	4
PV2061	Glass door 2000x600mm (hxw) K	1
RF2060	Rear panel 2000x600mm (hxw) K	1
SK2000	No.4 ArTu K uprights h=2000mm	1
SK2004	No.2 reduced funct. frames h=2000mm K d=250mm	1
SK6025	ArTu K Base/Top/Base strip 600x250mm (wxd)	1
TV6202	No.2 rear of struct. crosspieces w=600xPB0803	3

> Rapid selection table page 5/6 > In-depth technical information page 6/1 > Overall dimensions page 7/1

ArTu K Modular Structures
Examples of configurations

5

ArTu K Series dim. 1800x600x350 (2031x748x225) mm (external hxwxd) IP65 with plate for Isomax S5 and modular panels, complete with 800A busbars vertically on back of structure - Icw max 35kA

Code	Description	Q.ty
AD1066	No.4 busbar adapters In=800A with busbar holders up to 1600A	3
BA0800	Busbar In=800A	4
GD6002	DIN rail Kit without segreg.24 mod. w=600mm, K	6
KT5112	Hor. fixed T5 Kit+accessories 300x600mm (hxw) K	1
LF1840	No.2 side panels 1800x350mm (hxd) K	1
PB1601	Linear busbar holder In=1600A (75 kA)	3
PC1600	Blind panel 100x600mm (hxw) M, K	1
PC2600	Blind panel 200x600mm (hxw) M, K	1
PM2624	Panel 24 mod. 200x600mm (hxw) M, K	3
PM6672	Panel 72 mod. 600x600mm (hxw) M, K	1
PV1861	Glass door 1800x600mm (hxw) K	1
RF1860	Rear panel 1800x600mm (hxw) K	1
SK1800	No.4 ArTu K uprights h=1800mm	1
SK1804	No.2 funct. frames h=1800mm open K	1
SK6040	ArTu K Base/Top/Base strip 600x350mm (wxd)	1
TV6201	No.2 structure crosspieces w=600mm	2

> Rapid selection table page 5/6 > In-depth technical information page 6/1 > Overall dimensions page 7/1

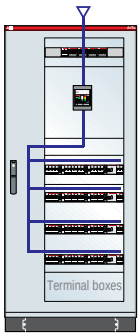

ArTu K Series dim. 1800x800x225 (2031x948x362) mm (external hxwxd) IP65 with plate for Tmax T5 and modular panels, complete with 800A busbars vertically on side of int. cable container - Icw max 35kA

Code	Description	Q.ty
BA0800	Busbar In=800A	4
GD6002	DIN rail Kit without segreg.24 mod. w=600mm, K	5
KT5102	Kit T5 3/4P vertic. fisso+mod diff. non segreg. K 500x600mm (hxl)	1
LF1840	No.2 side panels 1800x350mm (hxd) K	1
PB0802	Scaled busbar holder In=800A (35 kA)	5
PC1600	Blind panel 100x600mm (hxw) M, K	1
PC2600	Blind panel 200x600mm (hxw) M, K	1
PM2624	Panel 24 mod. 200x600mm (hxw) M, K	2
PM6672	Panel 72 mod. 600x600mm (hxw) M, K	1
PV1881	Glass door 1800x800mm (hxw) K	1
RF1880	Rear panel 1800x800mm (hxw) K	1
SK1800	No.4 ArTu K uprights h=1800mm	1
SK8040	ArTu K Base/Top/Base strip 800x350mm (wxd)	1
TV3101	No.2 int./ext. cable cont. crosspieces d=350mm	3
VC1824	Int. reduced cable cont.1800x200mm (hxw) K	1

> Rapid selection table page 5/6 > In-depth technical information page 6/1 > Overall dimensions page 7/1

ArTu K Modular Structures
Examples of configurations

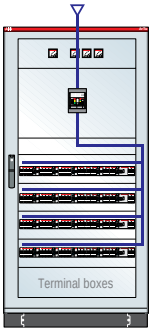

ArTu K Series dim. 1800x800x225 (2031x948x362)mm (external hxwxd) IP65 with plate for Tmax T5 and modular panels

5

Code	Description	Q.ty
GD8002	DIN rail kit not segregated 36 mod. w=800mm, K	4
KL5102	Kit for T5 3/4 poles fixed + RC mod. not segregated K 500x600mm (hxw)	1
LF1840	No.2 side panels 1800x350mm (hxd) K	1
PC1800	Blind panel 100x800mm (hxw) M, K	1
PC2800	Blind Panels 200x800mm (hxw) M, K	1
PM2836	36 mod. panels 200x800mm (hxwl) M, K	4
PS4968	Panels for 4 instruments 96x96 200x800mm (hwl)M, K	1
PV1882	Glass door 36 mod. 1800x800mm (hxw) K	1
RF1880	Rear panel 1800x800mm (hxw) K	1
SK1800	No.4 uprights ArTu K h=1800mm	1
SK1804	No.2 functional frames h=1800mm aperto K	1
SK8040	Base/Top/Base strip ArTu K 800x350mm (wxd)	1

> Rapid selection table page 5/6 > In-depth technical information page 6/1 > Overall dimensions page 7/1

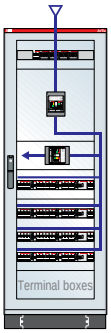

ArTu K Series dim. 2000x600x300 (2231x748x437)mm (external hxwxd) IP65 with plate for Tmax T5, T2-XT2 and modular panels

Code	Description	Q.ty	Code	Description	Q.ty
Tmax T kit			**Tmax XT kit**		
GD6002	DIN rail kit not segregated 24 mod. w=600mm, K	5	GD6002	DIN rail kit not segregated 24 mod. w=600mm, K	5
KT2117	Kit for T5 3/4 poles fixed + RC mod. not segregated K 500x600mm (hxw)	1	KX2613	Kit for T5 3/4 poles fixed + RC mod. not segregated K 500x600mm (hxw)	1
KT5102	Kit for T2 3/4 p. horiz. fixed 200x600mm (hxlw)	1	KT5102	Kit for XT2 3/4 p. horiz. fixed 200x600mm (hxlw)	1
LF2050	No.2 side panels 200x300mm (hxd) K	1	LF2050	No.2 side panels 200x300mm (hxd) K	1
PC3600	Blind panel 200x600mm (hxw) M, K	1	PC3600	Blind panel 200x600mm (hxw) M, K	1
PM2624	24 mod. Panel 200x600mm (hxw) M, K	2	PM2624	24 mod. Panel 200x600mm (hxw) M, K	2
PM6672	72 mod. Panel 600x600mm (hxw) M, K	1	PM6672	72 mod. Panel 600x600mm (hxw) M, K	1
PV2061	Glass door 2000x600mm (hxw) K	1	PV2061	Glass door 2000x600mm (hxw) K	1
RF2060	Rear panel. 2000x600mm (hxw) K	1	RF2060	Rear panel. 2000x600mm (hxw) K	1
SK2000	No.4 uprights ArTu K h=2000mm	1	SK2000	No.4 uprights ArTu K h=2000mm	1
SK2004	No.2 functional frames h=2000mm open K	1	SK2004	No.2 functional frames h=2000mm open K	1
SK6050	Base/Top/Base strip ArTu K 600x300mm (wxd)	1	SK6050	Base/Top/Base strip ArTu K 600x300mm (wxd)	1

> Rapid selection table page 5/6 > In-depth technical information page 6/1 > Overall dimensions page 7/1

ArTu K Modular Structures
Examples of configurations

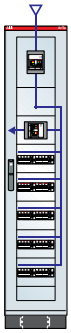

5

ArTu K Series dim. 2000x390x225 (2231x538x362) mm (external hxwxd) IP65 with plate for Tmax T5, T2-XT2 and modular panels, complete with 800A busbars vertically on back of structure - Icw max 35kA

Code	Description	Q.ty	Code	Description	Q.ty
Tmax T kit			**Tmax XT kit**		
AD1066	No.4 busbar adapters In=800A with bus. hold. up to 1600A	4	AD1066	No.4 busbar adapters In=800A with bus. hold. up to 1600A	4
BA0800	Busbar In=800A	4	BA0800	Busbar In=800A	4
GD4002	DIN rail Kit without segreg.12 mod. w=400mm, K	5	GD4002	DIN rail Kit without segreg.12 mod. w=400mm, K	5
KT2411	T2 3/4P horiz. fixed without segreg. Kit, K	1	KX2411	XT2 3/4P horiz. fixed without segreg. Kit, K	1
KT5412	T5 vert. fixed Kit 400x400mm (hxw)	1	KT5412	T5 vert. fixed Kit 400x400mm (hxw)	1
LF2040	No.2 side panels 2000x350mm (hxd) K	1	LF2040	No.2 side panels 2000x350mm (hxd) K	1
PB1601	Linear busbar holder In=1600A (75 kA)	4	PB1601	Linear busbar holder In=1600A (75 kA)	4
PC2400	Blind panel 200x400mm (hxw) K	2	PC2400	Blind panel 200x400mm (hxw) K	2
PM2424	Panel 12 mod. 200x400mm (hxw) K	5	PM2424	Panel 12 mod. 200x400mm (hxw) K	5
PV2041	Glass door 2000x400mm (hxw) K	1	PV2041	Glass door 2000x400mm (hxw) K	1
RF2040	Rear panel 2000x400mm (hxw) K	1	RF2040	Rear panel 2000x400mm (hxw) K	1
SK2000	No.4 ArTu K uprights h=2000mm	1	SK2000	No.4 ArTu K uprights h=2000mm	1
SK2003	No.2 funct. frames h=2000mm open K	1	SK2003	No.2 funct. frames h=2000mm open K	1
SK4040	ArTu K Base/Top/Base strip 400x350mm (wxd)	1	SK4040	ArTu K Base/Top/Base strip 400x350mm (wxd)	1
TV4000	No.2 rear crosspieces w=400mm, K	2	TV4000	No.2 rear crosspieces w=400mm, K	2

> Rapid selection table page 5/6 > In-depth technical information page 6/1 > Overall dimensions page 7/1

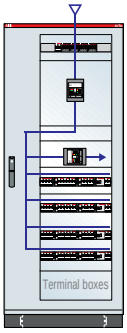

ArTu K Series dim. 2000x800x300 (2231x948x437)mm (external hxwxd) IP65 with plate for Tmax T5, T2-XT2 and modular panels, complete with 400A busbars vertically on back of structure - Icw max 35kA

5

Code	Description	Q.ty	Code	Description	Q.ty
Tmax T kit			**Tmax XT kit**		
AD1066	No.4 busbar adapters 400/800A	5	AD1066	No.4 busbar adapters 400/800A	5
BA0400	Busbar In=400A	4	BA0400	Busbar In=400A	4
GD6002	DIN rail kit not segregated 24 mod. w=600mm, K	5	GD6002	DIN rail kit not segregated 24 mod. w=600mm, K	5
KT2117	Kit for T2 3/4 p. horiz. fixed 200x600mm (hxlw)	1	KX2619	Kit for XT2 3/4 p. horiz. fixed 200x600mm (hxlw)	1
KT5102	Kit for T5 3/4 poles fixed + RC mod. not segregated K 500x600mm (hxw)	1	KT5102	Kit for T5 3/4 poles fixed + RC mod. not segregated K 500x600mm (hxw)	1
LF2050	No.2 side panels 2000x300mm (hxd) K	1	LF2050	No.2 side panels 2000x300mm (hxd) K	1
PB1603	Linear busbar holder In=1600A (65 kA)	5	PB1603	Linear busbar holder In=1600A (65 kA)	5
PC1600	Blind panel 100x600mm (hxw) M, K	1	PC1600	Blind panel 100x600mm (hxw) M, K	1
PC2600	Blind panel 200x600mm (hxw) M, K	1	PC2600	Blind panel 200x600mm (hxw) M, K	1
PM2624	24 mod. Panel 200x600mm (hxw) M, K	2	PM2624	24 mod. Panel 200x600mm (hxw) M, K	2
PM6672	72 mod. Panel 600x600mm (hxw) M, K	1	PM6672	72 mod. Panel 600x600mm (hxw) M, K	1
PV2081	Glass door 2000x800mm (hxw) K	1	PV2081	Glass door 2000x800mm (hxw) K	1
RF2080	Rear panel 2000x800mm (hxw) K	1	RF2080	Rear panel 2000x800mm (hxw) K	1
SK2000	No.4 uprights ArTu K h=2000mm	1	SK2000	No.4 uprights ArTu K h=2000mm	1
SK8050	Base/Top/Base strip ArTu K 800x300mm (wxd)	1	SK8050	Base/Top/Base strip ArTu K 800x300mm (wxd)	1
TV5101	No.2 int./ext. cable container crosspieces d=300mm	3	TV5101	No.2 int./ext. cable container crosspieces d=300mm	3
VC2024	Internal reduced cable container 2000x200mm (hxw) K	1	VC2024	Internal reduced cable container 2000x200mm (hxw) K	1

> Rapid selection table page 5/6 > In-depth technical information page 6/1 > Overall dimensions page 7/1

ArTu K Modular Structures
Examples of configurations

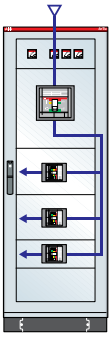

5

ArTu K Series dim. 1800x600x500 (2031x748x637) mm (external hxwxd) IP41 with plate for Isomax S7, Tmax T5, T2-XT2 and modular panels, complete with 1250A busbars vertically on back of structure - Icw max 50kA

Code	Description	Q.ty	Code	Description	Q.ty
Tmax T kit			**Tmax XT kit**		
AD1066	No.4 busbar adapters In=800A with busbar holders up to 1600A	1	AD1066	No.4 busbar adapters In=800A with busbar holders up to 1600A	1
BA0800	Busbar In=800A	1	BA0800	Busbar In=800A	1
BA1250	Busbar In=1250A	3	BA1250	Busbar In=1250A	3
KT2111	S7 vert. fixed without segreg. Kit, K	1	KX2611	Kit XT2 vert. fixed without segreg. Kit, K	1
KT5111	T2 3/4P horiz. fixed without segreg. Kit, K	2	KT5111	T2 3/4P horiz. fixed without segreg. Kit, K	2
KT7231	Hor. fixed T5 Kit+accessories 300x600mm (hxw) K	1	KT7231	Hor. fixed T5 Kit+accessories 300x600mm (hxw) K	1
LA1860	No.2 ventilated side panels 1800x600mm (hxw) K	1	LA1860	No.2 ventilated side panels 1800x600mm (hxw) K	1
PB1603	Linear busbar holder In=1600A (65kA)	4	PB1603	Linear busbar holder In=1600A (65kA)	4
PC3600	Blind panel 100x600mm (hxw) M, K	1	PC3600	Blind panel 100x600mm (hxw) M, K	1
PS4960	4-instrument panel 96x96 200x600mm (hxw) M, K	1	PS4960	4-instrument panel 96x96 200x600mm (hxw) M, K	1
PV1861	Glass door 1800x600mm (hxw) K	1	PV1861	Glass door 1800x600mm (hxw) K	1
RF1860	Rear panel 1800x600mm (hxw) K	1	RF1860	Rear panel 1800x600mm (hxw) K	1
SK1800	No.4 ArTu K uprights h=1800mm	1	SK1800	No.4 ArTu K uprights h=1800mm	1
SK1803	No.2 funct. frames h=1800mm open K	1	SK1803	No.2 funct. frames h=1800mm open K	1
SK6060	ArTu K Base/Top/Base strip 600x600mm (wxd)	1	SK6060	ArTu K Base/Top/Base strip 600x600mm (wxd)	1
TV6001	No.2 axto frame struct. crosspieces d=600mm	2	TV6001	No.2 axto frame struct. crosspieces d=600mm	2

> Rapid selection table page 5/6 > In-depth technical information page 6/1 > Overall dimensions page 7/1

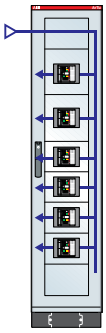

ArTu K Series dim. 1800x390x500 (2031x538x637) mm (external hxwxd) IP41 with plate for Tmax T5, T3, T2, XT3, XT2 and modular panels, complete with 1250A busbars vertically on side of structure - Icw max 50kA

Code	Description	Q.ty	Code	Description	Q.ty
Tmax T kit			**Tmax XT kit**		
AD1066	No.4 busbar adapters In=800A with bus. hold. up to 1600A	1	AD1066	No.4 busbar adapters In=800A with bus. hold. up to 1600A	1
BA0800	Busbar In=800A	1	BA0800	Busbar In=800A	1
BA1250	Busbar In=1250A	3	BA1250	Busbar In=1250A	3
KT2411	T2 3/4P horiz. fixed without segreg. Kit, K	3	KX2411	kit XT2 3/4P horiz. fixed without segreg. Kit, K	3
KT3419	T3 3/4P horiz. fixed without segreg. Kit, K	1	KX3419	Kit XT3 3/4P horiz. fixed without segreg. Kit, K	1
KT5411	T5 horiz. fixed Kit 300x400mm (hxw) K	2	KT5411	T5 horiz. fixed Kit 300x400mm (hxw) K	2
LA1860	No.2 ventilated side panels 1800x600mm (hxw) K	1	LA1860	No.2 ventilated side panels 1800x600mm (hxw) K	1
PB1603	Linear busbar holder In=1600A (65kA)	4	PB1603	Linear busbar holder In=1600A (65kA)	4
PC2400	Blind panel 200x400mm (hxw) K	2	PC2400	Blind panel 200x400mm (hxw) K	2
PV1841	Glass door 1800x400mm (hxw) K	1	PV1841	Glass door 1800x400mm (hxw) K	1
RF1840	Rear panel 1800x400mm (hxw) K	1	RF1840	Rear panel 1800x400mm (hxw) K	1
SK1800	No.4 ArTu K uprights h=1800mm	1	SK1800	No.4 ArTu K uprights h=1800mm	1
SK1803	No.2 funct. frames h=1800mm open K	1	SK1803	No.2 funct. frames h=1800mm open K	1
SK4060	ArTu K Base/Top/Base strip 400x600mm (wxd)	1	SK4060	ArTu K Base/Top/Base strip 400x600mm (wxd)	1
TV6001	No.2 axto frame struct. crosspieces d=600mm	2	TV6001	No.2 axto frame struct. crosspieces d=600mm	2

> Rapid selection table page 5/6 > In-depth technical information page 6/1 > Overall dimensions page 7/1

ArTu K Modular Structures
Examples of configurations

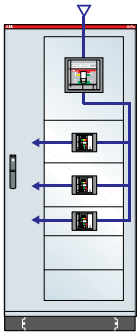

ArTu K Series dim. 1800x800x500 (2031x948x637) mm (external hxwxd) IP41 with plate Tmax T7, T5, T2, XT2 and modular panels, complete with 1250A busbars vertically on side of internal cable riser - Icw max 35kA

5

Code	Description	Q.ty	Code	Description	Q.ty
Tmax T kit			**Tmax XT kit**		
AD1066	No.4 busbar adapters In=800A with bus. hold. up to 1600A	1	AD1066	No.4 busbar adapters In=800A with bus. hold. up to 1600A	1
BA0800	Busbar In=800A	1	BA0800	Busbar In=800A	1
BA1250	Busbar In=1250A	3	BA1250	Busbar In=1250A	3
KT2111	T2 3/4P horiz. fixed without segreg. Kit, K	1	KT2611	XT2 3/4P horiz. fixed without segreg. Kit, K	1
KT5111	Hor. fixed T5 Kit+accessories 300x600mm (hxw) K	2	KT5111	Hor. fixed T5 Kit+accessories 300x600mm (hxw) K	2
KT7231	S7 vert. fixed without segreg. Kit, K	1	KT7231	S7 vert. fixed without segreg. Kit, K	1
LA1860	No.2 ventilated side panels 1800x600mm (hxw) K	1	LA1860	No.2 ventilated side panels 1800x600mm (hxw) K	1
PB1603	Linear busbar holder In=1600A (65kA)	3	PB1603	Linear busbar holder In=1600A (65kA)	3
PC2600	Blind panel 100x600mm (hxw) M, K	2	PC2600	Blind panel 100x600mm (hxw) M, K	2
PV1881	Blind panel 200x600mm (hxw) M, K	1	PV1881	Blind panel 200x600mm (hxw) M, K	1
RF1880	Glass door 1800x800mm (hxw) K	1	RF1880	Glass door 1800x800mm (hxw) K	1
SK1800	No.4 ArTu K uprights h=1800mm	1	SK1800	No.4 ArTu K uprights h=1800mm	1
SK8060	ArTu K Base/Top/Base strip 800x600mm (wxd)	1	SK8060	ArTu K Base/Top/Base strip 800x600mm (wxd)	1
TV6101	No.2 int./ext. cable cont. crosspieces d=600mm	2	TV6101	No.2 int./ext. cable cont. crosspieces d=600mm	2
VC1823	Internal cable cont.1800x200mm (hxw) K	1	VC1823	Internal cable cont.1800x200mm (hxw) K	1

> Rapid selection table page 5/6 > In-depth technical information page 6/1 > Overall dimensions page 7/1

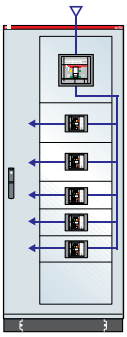

ArTu K Series dim. 2000x800x500 (2231x948x637)mm (external hxwxd) P41 with kit for Tmax T6, T5, T3, XT3 complete with 1600A busbars vertically on side on side of internal cable riser - Icw max 65kA

5

Code	Description	Q.ty	Code	Description	Q.ty
Tmax T kit			**Tmax XT kit**		
BA1250	Busbar In=1250A	1	BA1250	Busbar In=1250A	1
BA1600	Busbar In=1600A	3	BA1600	Busbar In=1600A	3
KT3119	Kit for T3 3/4P horizontal fixed not segregated K	3	KT3611	Kit for XT3 3/4P horizontal fixed not segregated K	3
KT5111	Kit for T5 horizontal fixed +accessories 300x600mm (hxw) K	2	KT5111	Kit for T5 horizontal fixed +accessories 300x600mm (hxw) K	2
KT6211	Kit for T6 vertical fixed without segregation K	1	KT6211	Kit for T6 vertical fixed without segregation K	1
LA2060	No.2 ventilated side panels 2000x600mm (hxw) K	1	LA2060	No.2 ventilated side panels 2000x600mm (hxw) K	1
PB1601	Linear busbar holder In=1600A (75 kA)	7	PB1601	Linear busbar holder In=1600A (75 kA)	7
PC3600	Blind panel 300x600mm (hxw) M, K	1	PC3600	Blind panel 300x600mm (hxw) M, K	1
PV2081	Glass door 2000x800mm (hxw) K	1	PV2081	Glass door 2000x800mm (hxw) K	1
RF2080	Rear panel 2000x800mm (hxw) K	1	RF2080	Rear panel 2000x800mm (hxw) K	1
SK2000	No.4 uprights ArTu K h=2000mm	1	SK2000	No.4 uprights ArTu K h=2000mm	1
SK8060	Base/Top/Base strip ArTu K 800x600mm (wxd)	1	SK8060	Base/Top/Base strip ArTu K 800x600mm (wxd)	1
TV6101	No.2 int./ext. cable container crosspieces d=600mm	4	TV6101	No.2 int./ext. cable container crosspieces d=600mm	4
VC2023	Internal cable container. 2000x200mm (hxw) K	1	VC2023	Internal cable container. 2000x200mm (hxw) K	1

> Rapid selection table page 5/6 > In-depth technical information page 6/1 > Overall dimensions page 7/1

ArTu K Modular Structures
Examples of configurations

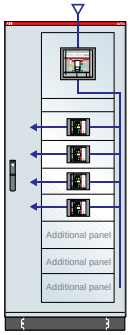

5

ArTu K Series dim. 2000x800x500 (2231x948x637)mm (external hxwxd) IP65 with kit for Tmax T6, T3, T2, XT3, XT2 complete with 1600A busbars vertically on side on side of internal cable riser - Icw max 65kA

Code	Description	Q.ty	Code	Description	Q.ty
Tmax T kit			**Tmax XT kit**		
BA1250	Busbar In=1250A	1	BA1250	Busbar In=1250A	1
BA1600	Busbar In=1600A	3	BA1600	Busbar In=1600A	3
KT2111	Kit forT2 3/4P horiz. fixed not segregated K	2	KX2611	Kit for XT2 3/4P horiz. fixed not segregated K	2
KT3119	Kit for T3 3/4P horiz. fixed not segregated K	2	KX3611	Kit for XT3 3/4P horiz. fixed not segregated K	2
KT6211	Kit for T6 vert. fixed not segregated K	1	KT6211	Kit for T6 vert. fixed not segregated K	1
LA2060	No.2 ventilated side panels 2000x600mm (hxw) K	1	LA2060	No.2 ventilated side panels 2000x600mm (hxw) K	1
PB1601	Linear busbar holder In=1600A (75 kA)	7	PB1601	Linear busbar holder In=1600A (75 kA)	7
PC1600	Blind panel 100x600mm (hxw) M, K	1	PC1600	Blind panel 100x600mm (hxw) M, K	1
PC2600	Blind panel 200x600mm (hxw) M, K	3	PC2600	Blind panel 200x600mm (hxw) M, K	3
PV2081	Glass door 2000x800mm (hxw) K	1	PV2081	Glass door 2000x800mm (hxw) K	1
RF2080	Rear panel 2000x800mm (hxw) K	1	RF2080	Rear panel 2000x800mm (hxw) K	1
SK2000	No.4 uprights ArTu K h=2000mm	1	SK2000	No.4 uprights ArTu K h=2000mm	1
SK8060	Base/Top/Base strip ArTu K 800x600mm (wxd)	1	SK8060	Base/Top/Base strip ArTu K 800x600mm (wxd)	1
TV6101	No.2 int./ext. cable container crosspieces d=600mm	4	TV6101	No.2 int./ext. cable container crosspieces d=600mm	4
VC2023	Internal cable container 2000x200mm (hxw) K	1	VC2023	Internal cable container 2000x200mm (hxw) K	1

> Rapid selection table page 5/6 > In-depth technical information page 6/1 > Overall dimensions page 7/1

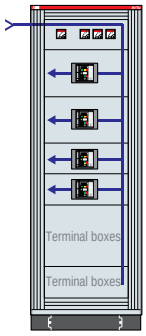

ArTu K Series Form 3/4 segregation dim.1800x600x700 (2031x748x837) mm (external hxwxd) IP31 with plate for Tmax T5, T3, T2, XT3, XT2 complete with 1600A busbars vertically on side of structure - Icw max 50kA

Code	Description	Q.ty	Code	Description	Q.ty
Tmax T kit			**Tmax XT kit**		
BA1250	Busbar In=1250A	1	BA1250	Busbar In=1250A	1
BA1600	Busbar In=1600A	3	BA1600	Busbar In=1600A	3
IP3060	No.2 hor. finishing sections w=600mm K	1	IP3060	No.2 hor. finishing sections w=600mm K	1
IP3180	No.2 vert. finishing sections IP31 h=1800mm K	1	IP3180	No.2 vert. finishing sections IP31 h=1800mm K	1
KT2110	T2 3/4P hor. fixed segreg. Kit, K	2	KY2611	XT2 3/4P hor. fixed segreg. Kit, K	2
KT3110	T3 3/4P hor. fixed segreg. Kit, K	1	KY3611	XT3 3/4P hor. fixed segreg. Kit, K	1
KT5136	T5 segr. hor. fixed Kit 300x600mm(hxw)K	1	KT5136	T5 segr. hor. fixed Kit 300x600mm(hxw)K	1
LA1880	No.2 ventilated side panels 1800x800mm (hxw) K	1	LA1880	No.2 ventilated side panels 1800x800mm (hxw) K	1
PB1601	Linear busbar holder In=1600A (75 kA)	5	PB1601	Linear busbar holder In=1600A (75 kA)	5
PC2600	Blind panel 200x600mm (hxw) M, K	1	PC2600	Blind panel 200x600mm (hxw) M, K	1
PC4600	Blind panel 400x600mm (hxw) M, K	1	PC4600	Blind panel 400x600mm (hxw) M, K	1
PF2005	Plain plate 200x600mm (hxw) segreg. K	2	PF2005	Plain plate 200x600mm (hxw) segreg. K	2
PF4005	Plain plate 400x600mm (hxw) segreg. K	1	PF4005	Plain plate 400x600mm (hxw) segreg. K	1
PS4960	4-instrument panel 96x96 200x600mm (hxw)M, K	1	PS4960	4-instrument panel 96x96 200x600mm (hxw)M, K	1
RF1860	Rear panel 1800x600mm (hxw) K	1	RF1860	Rear panel 1800x600mm (hxw) K	1
SH2030	Busbar hor. segregation w=600mm, K, PC	1	SH2030	Busbar hor. segregation w=600mm, K, PC	1
SH6000	Busbar hor. shelf w=600mm, K	2	SH6000	Busbar hor. shelf w=600mm, K	2
SK1800	No.4 ArTu K uprights h=1800mm	1	SK1800	No.4 ArTu K uprights h=1800mm	1
SK1802	No.2 funct. frames h=1800mm closed K	1	SK1802	No.2 funct. frames h=1800mm closed K	1
SK6080	ArTu K Base/Top/Base strip 600x700mm (wxd)	1	SK6080	ArTu K Base/Top/Base strip 600x700mm (wxd)	1
SV2061	Busbar vert. segregation 200x600mm (hxw) K	1	SV2061	Busbar vert. segregation 200x600mm (hxw) K	1
TV8005	No.2 funct. frame struct. crosspieces d=800mm	3	TV8005	No.2 funct. frame struct. crosspieces d=800mm	3
Segregation Form 3			**Segregation Form 3**		
FH3540	F3 horiz. segreg. Kit 400x600mm (hxw) K	1	FH3540	F3 horiz. segreg. Kit 400x600mm (hxw) K	1
FH3430	F3 horiz. segreg. Kit 200x600mm (hxw) K	2	FH3430	F3 horiz. segreg. Kit 200x600mm (hxw) K	2
FH3220	F3 horiz. segreg. Kit 300x600mm (hxw) K	4	FH3220	F3 horiz. segreg. Kit 300x600mm (hxw) K	4
Segregation Form 4			**Segregation Form 4**		
FH4220	Fairlead plate F4 h=200mm	2	FH4220	Fairlead plate F4 h=200mm	2
FH4430	Fairlead plate F4 h=300mm	1	FH4430	Fairlead plate F4 h=300mm	1
FH4540	Fairlead plate F4 h=400mm	1	FH4540	Fairlead plate F4 h=400mm	1

> Rapid selection table page 5/6 > In-depth technical information page 6/1 > Overall dimensions page 7/1

ArTu K Modular Structures
Examples of configurations

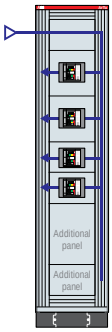

5

ArTu K Series Form 3/4 segregation dim.1800x390x700 (2031x538x837) mm (external hxwxd) IP31 with plate for Tmax T5, T3, T2 and modular panels, complete with 1600A busbars vertically on side of structure - Icw max 50kA

Code	Description	Q.ty
BA1250	Busbar In=1250A	1
BA1600	Busbar In=1600A	3
IP3040	No.2 hor. finishing sections IP31 w=400mm K	1
IP3180	No.2 vert. finishing sections IP31 h=1800mm K	1
KT2410	T2 3/4P hor. fixed segreg. Kit, K	2
KT3410	T3 3/4P hor. fixed segreg. Kit, K	1
KT5122	T5 segr. hor. fixed Kit 300x400mm(hxw)K	1
LA1880	No.2 ventilated side panels 1800x800mm (hxw) K	1
PB1601	Linear busbar holder In=1600A (75 kA)	5
PC2400	Blind panel 200x400mm (hxw) K	2
PC4400	Blind panel 400x400mm (hxw) K	1
PF2405	Plain plate 200x400mm (hxw) segreg. K	2
PF4405	Plain plate 400x400mm (hxw) segreg. K	1
RF1840	Rear panel 1800x400mm (hxw) K	1
SH4000	Busbar hor. shelf w=400mm, K	2
SH4030	Busbar hor. segregation w=400mm, K	1
SK1800	No.4 ArTu K uprigh ts h=1800mm	1
SK1802	No.2 funct. frames h=1800mm closed K	1
SK4080	ArTu K Base/Top/Base strip 400x800mm (wxd)	1
SV4061	Busbar vert. segregation 200x400mm (hxw) K	1
TV8005	No.2 funct. frame struct. crosspieces d=800mm	3
Segregation Form 3		
FH3220	F3 horiz. segreg. Kit 200x600mm (hxw) K	4
FH3430	F3 horiz. segreg. Kit 300x600mm (hxw) K	2
FH3540	F3 horiz. segreg. Kit 400x600mm (hxw) K	1
Segregation Form 4		
FH4220	Fairlead plate F4 h=200mm	2
FH4430	Fairlead plate F4 h=300mm	1
FH4540	Fairlead plate F4 h=400mm	1

> Rapid selection table page 5/6 > In-depth technical information page 6/1 > Overall dimensions page 7/1

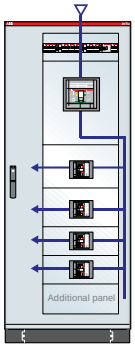

ArTu K Series Form 3/4 segregation dim.2000x800x700 (2231x948x837) mm (external hxwxd) IP65 with plate for Tmax T6, T3, T2, XT3, XT4 and modular panels, complete with 1600A busbars vertically on side of structure - Icw max 50kA

Code	Description	Q.ty	Code	Description	Q.ty
Tmax T kit			**Tmax XT kit**		
BA1250	Busbar In=1250A	1	BA1250	Busbar In=1250A	1
BA1600	Busbar In=1600A	3	BA1600	Busbar In=1600A	3
GD7005	DIN rail Kit w=700mm segreg. K, PC	1	GD7005	DIN rail Kit w=700mm segreg. K, PC	1
KT2110	T2 3/4P hor. fixed segreg. Kit, K	2	KY2411	XT2 3/4P hor. fixed segreg. Kit, K	2
KT3110	T3 3/4P hor. fixed segreg. Kit, K	2	KY3411	XT3 3/4P hor. fixed segreg. Kit, K	2
KT6210	T6 vert. fixed segreg. Kit, K	1	KT6210	T6 vert. fixed segreg. Kit, K	1
LA2080	No.2 ventilated side panels 2000x800mm (hxw) K	1	LA2080	No.2 ventilated side panels 2000x800mm (hxw) K	1
PB1601	Linear busbar holder In=1600A (75 kA)	5	PB1601	Linear busbar holder In=1600A (75 kA)	5
PC2600	Blind panel 200x600mm (hxw) M, K	1	PC2600	Blind panel 200x600mm (hxw) M, K	1
PF2005	Plain plate 200x600mm (hxw) segreg. K	2	PF2005	Plain plate 200x600mm (hxw) segreg. K	2
PM2624	Panel 24 mod. 200x600mm (hxw) M, K	1	PM2624	Panel 24 mod. 200x600mm (hxw) M, K	1
PV2081	Glass door 2000x800mm (hxw) K	1	PV2081	Glass door 2000x800mm (hxw) K	1
RF2080	Rear panel 2000x800mm (hxw) K	1	RF2080	Rear panel 2000x800mm (hxw) K	1
SH2030	Busbar hor. segregation w=600mm, K, PC	1	SH2030	Busbar hor. segregation w=600mm, K, PC	1
SH6000	Busbar hor. shelf w=600mm, K	2	SH6000	Busbar hor. shelf w=600mm, K	2
SK2000	No.4 ArTu K uprights h=2000mm	1	SK2000	No.4 ArTu K uprights h=2000mm	1
SK8080	ArTu K Base/Top/Base strip 800x800mm (wxd)	1	SK8080	ArTu K Base/Top/Base strip 800x800mm (wxd)	1
SV2061	Busbar vert. segregation 200x600mm (hxw) K	1	SV2061	Busbar vert. segregation 200x600mm (hxw) K	1
TV8101	No.2 int./ext. cable cont. crosspieces d=800mm	3	TV8101	No.2 int./ext. cable cont. crosspieces d=800mm	3
VC2020	Cable container int. segreg. 2000x200mm (hxw) K	1	VC2020	Cable container int. segreg. 2000x200mm (hxw) K	1
Segregation Form 3			**Segregation Form 3**		
FH3220	F3 hor iz. segreg. Kit 200x600mm (hxw) K	4	FH3220	F3 hor iz. segreg. Kit 200x600mm (hxw) K	4
FH3430	F3 horiz. segreg. Kit 300x600mm (hxw) K	2	FH3430	F3 horiz. segreg. Kit 300x600mm (hxw) K	2
FV3668	S6 vert. F3 segreg. Kit600x800mm (hxd)	1	FV3668	S6 vert. F3 segreg. Kit600x800mm (hxd)	1
Segregation Form 4			**Segregation Form 4**		
FH4220	Fairlead plate F4 h=200mm	3	FH4220	Fairlead plate F4 h=200mm	3
FH4430	Fairlead plate F4 h=300mm	2	FH4430	Fairlead plate F4 h=300mm	2
FV4668	Fairlead plate F4 vert. d=800mm	1	FV4668	Fairlead plate F4 vert. d=800mm	1

> Rapid selection table page 5/6 > In-depth technical information page 6/1 > Overall dimensions page 7/1

ArTu K Modular Structures
Examples of configurations

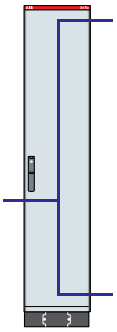

5

ArTu K Series dim. 1800x300x700 (2031x420x837) mm (external hxwxd) IP65 complete with 1250A busbars vertically on side of cable riser - Icw max 50kA

Code	Description	Q.ty
AD1014	Lateral side-by-side Kit, K	1
AD1066	No.4 busbar adapters In=800A with busbar holder up to 1600A	2
BA0800	Busbar In=800A	1
BA1250	Busbar In=1250A	3
PB1600	Scaled busbar holder In=1600A (75 kA)	5
PO1831	Blind door 1800x300mm (hxw) L, M int.	1
PO1833	Blind door 1800x300mm (hxw) K ext.	1
RF1830	Cable container rear panel 1800x300mm (hxw) K	1
SK1800	No.4 ArTu K uprights h=1800mm	1
TV8101	No.2 int./ext. cable cont. crosspieces d=800mm	3
VC3080	Cable container 300x800mm (wxd) K	1

> Rapid selection table page 5/6 > In-depth technical information page 6/1 > Overall dimensions page 7/1

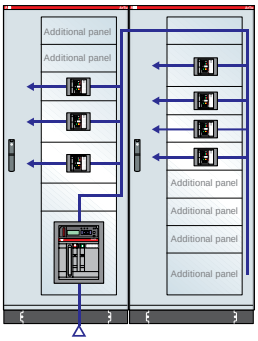

ArTu K Series 2 x dim.2000x1600x700 (2231x1924x837) mm (external hxwxd) IP65 complete with 1600A horizontal and 1250A vertical busbars - Icw max 75kA

Code	Description	Q.ty	Code	Description	Q.ty
Tmax T kit			**Tmax XT kit**		
AD1014	Lateral side-by-side Kit, K	1	AD1014	Lateral side-by-side Kit, K	1
AD1064	No.12 coupling screws w=27 x flat up to 10mm	4	AD1064	No.12 coupling screws w=27 x flat up to 10mm	4
AD1066	No.4 busbar adapters In=800A with busbar holders up to 1600A	2	AD1066	No.4 busbar adapters In=800A with busbar holders up to 1600A	2
AD1069	No.4 connect. coupling busbars from 1250/1600A to 800A	1	AD1069	No.4 connect. coupling busbars from 1250/1600A to 800A	1
BA0800	Busbar In=800A	1	BA0800	Busbar In=800A	1
BA1250	Busbar In=1250A	4	BA1250	Busbar In=1250A	4
BA1600	Busbar In=1600A	3	BA1600	Busbar In=1600A	3
KE3215	Kit per Emax E1, E2, E3 vert. fixed	1	KE3215	Kit per Emax E1, E2, E3 vert. fixed	1
KT2111	T2 Kit 3/4P horiz. fixed without segreg. K	2	KX2611	XT2 Kit 3/4P horiz. fixed without segreg. K	2
KT4111	T4 Kit hor. fixed+access. 200x600mm (hxw) K	2	KX4611	XT4 Kit hor. fixed+access. 200x600mm (hxw) K	2
KT5111	Hor. fixed T5 Kit+accessories 300x600mm (hxw) K	3	KT5111	Hor. fixed T5 Kit+accessories 300x600mm (hxw) K	3
LF2080	No.2 side panels 2000x800mm (hxd) K	1	LF2080	No.2 side panels 2000x800mm (hxd) K	1
PB1601	Linear busbar holder In=1600A (75 kA)	10	PB1601	Linear busbar holder In=1600A (75 kA)	10
PC2600	Blind panel 200x600mm (hxw) M, K	7	PC2600	Blind panel 200x600mm (hxw) M, K	7
PC3600	Blind panel 300x600mm (hxw) M, K	1	PC3600	Blind panel 300x600mm (hxw) M, K	1
PV2081	Glass door 2000x800mm (hxw) K	2	PV2081	Glass door 2000x800mm (hxw) K	2
RF2080	Rear panel 2000x800mm (hxw) K	2	RF2080	Rear panel 2000x800mm (hxw) K	2
SK2000	No.4 ArTu K uprights h=2000mm	2	SK2000	No.4 ArTu K uprights h=2000mm	2
SK8080	ArTu K Base/Top/Base strip 800x800mm (wxd)	2	SK8080	ArTu K Base/Top/Base strip 800x800mm (wxd)	2
TV8001	No.2 open frame structure crosspieces d=800mm	3	TV8001	No.2 open frame structure crosspieces d=800mm	3
TV8211	No.2 structure crosspieces w=800mm	2	TV8211	No.2 structure crosspieces w=800mm	2
VC2023	Internal cable cont.2000x200mm (hxw) K	2	VC2023	Internal cable cont.2000x200mm (hxw) K	2

> Rapid selection table page 5/6 > In-depth technical information page 6/1 > Overall dimensions page 7/1

ArTu K Modular Structures
Examples of configurations

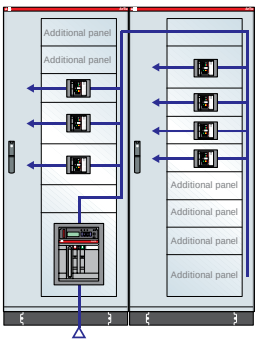

ArTu K Series 2 x dim.2000x1600x700 (2231x1924x837) mm (external hxwxd) IP65 complete with 3200A horizontal and 1250A vertical busbars - Icw max 75kA

5

Code	Description	Q.ty	Code	Description	Q.ty
Tmax T kit			**Tmax XT kit**		
AD1014	Lateral side-by-side Kit, K	1	AD1014	Lateral side-by-side Kit, K	1
AD1064	No.12 coupling screws w=27 x flat up to 10mm	4	AD1064	No.12 coupling screws w=27 x flat up to 10mm	4
AD1066	No.4 busbar adapters In=800A with busbar holders up to 1600A	2	AD1066	No.4 busbar adapters In=800A with busbar holders up to 1600A	2
AD1078	No.4 connect. coupling busbars from 3200A to 1600/1250A	2	AD1078	No.4 connect. coupling busbars from 3200A to 1600/1250A	2
BA0800	Busbar In=800A	2	BA0800	Busbar In=800A	2
BA1250	Busbar In=1250A	6	BA1250	Busbar In=1250A	6
BA2000	Busbar In=2000A	7	BA2000	Busbar In=2000A	7
KE3215	Kit per Emax E1, E2, E3 vert. fixed	1	KE3215	Kit per Emax E1, E2, E3 vert. fixed	1
KT2111	T2 Kit 3/4P horiz. fixed without segreg. K	2	KX2611	XT2 Kit 3/4P horiz. fixed without segreg. K	2
KT4111	T4 Kit hor. fixed+access. 200x600mm (hxw) K	2	KX4611	XT4 Kit hor. fixed+access. 200x600mm (hxw) K	2
KT5111	Hor. fixed T5 Kit+accessories 300x600mm (hxw) K	3	KT5111	Hor. fixed T5 Kit+accessories 300x600mm (hxw) K	3
LF2080	No.2 side panels 2000x800mm (hxd) K	1	LF2080	No.2 side panels 2000x800mm (hxd) K	1
PB1601	Linear busbar holder In=1600A (75 kA)	14	PB1601	Linear busbar holder In=1600A (75 kA)	14
PB3201	Linear busbar holder In=3200A (75 kA)	6	PB3201	Linear busbar holder In=3200A (75 kA)	6
PC2600	Blind panel 200x600mm (hxw) M, K	7	PC2600	Blind panel 200x600mm (hxw) M, K	7
PC3600	Blind panel 300x600mm (hxw) M, K	1	PC3600	Blind panel 300x600mm (hxw) M, K	1
PV2081	Glass door 2000x800mm (hxw) K	2	PV2081	Glass door 2000x800mm (hxw) K	2
RF2080	Rear panel 2000x800mm (hxw) K	2	RF2080	Rear panel 2000x800mm (hxw) K	2
SK2000	No.4 ArTu K uprights h=2000mm	2	SK2000	No.4 ArTu K uprights h=2000mm	2
SK8080	ArTu K Base/Top/Base strip 800x800mm (wxd)	2	SK8080	ArTu K Base/Top/Base strip 800x800mm (wxd)	2
TV8001	No.2 Open frame struct. crosspieces d=800mm	3	TV8001	No.2 Open frame struct. crosspieces d=800mm	3
TV8211	No.2 structure crosspieces w=800mm	3	TV8211	No.2 structure crosspieces w=800mm	3
VC2023	Int. reduced cable cont.2000x200mm (hxw) K	2	VC2023	Int. reduced cable cont.2000x200mm (hxw) K	2

> Rapid selection table page 5/6 > In-depth technical information page 6/1 > Overall dimensions page 7/1

ArTu K Series dim. 2000x600x500 (2231x748x637) mm (external hxwxd) IP65 with back plate h=2000

5

Code	Description	Q.ty
AD1050	No.2 pair of tracks x back plate w=600mm	1
LF2060	No.2 side panels 2000x600mm (hxd) K	1
PF2006	Plain plate 2000x600mm (hxw) K	1
PO2061	Blind door 2000x600mm (hxw) K	1
RF2060	Rear panel 2000x600mm (hxw) K	1
SK2000	No.4 ArTu K uprights h=2000mm	1
SK6060	ArTu K Base/Top/Base strip 600x600mm (wxd)	1

> Rapid selection table page 5/6 > In-depth technical information page 6/1 > Overall dimensions page 7/1

ArTu K Modular Structures
Examples of configurations

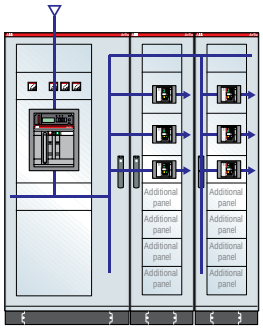

ArTu K Series dim. 1800x1580x700 (2031x1984x837) mm (external hxwxd) IP65 with Emax E1, T5, T3, XT3, 1600A omnibus busbars and vertical 800A branches - Icw 50kA

5

Code	Description	Q.ty	Code	Description	Q.ty
Tmax T kit			**Tmax XT kit**		
AD1014	Lateral side-by-side Kit, K	2	AD1014	Lateral side-by-side Kit, K	2
AD1066	No.4 busbar adapters In=800A with busbar holders up to 1600A	4	AD1066	No.4 busbar adapters In=800A with busbar holders up to 1600A	4
AD1069	No.4 connect. coupling busbars from 1250/1600A to 800A	2	AD1069	No.4 connect. coupling busbars from 1250/1600A to 800A	2
BA0800	Busbar In=800A	4	BA0800	Busbar In=800A	4
BA1600	Busbar In=1600A	10	BA1600	Busbar In=1600A	10
KE3215	Kit E1, E2, E3 vert. fixed without segreg. K	1	KE3215	Kit E1, E2, E3 vert. fixed without segreg. K	1
KT3419	XT3 Kit 3/4P horiz. fixed without segreg. K	2	KX3411	T3 Kit 3/4P horiz. fixed without segreg. K	2
KT5411	T5 Kit horiz. fixed 300x400mm (hxw) K	4	KT5411	T5 Kit horiz. fixed 300x400mm (hxw) K	4
LF1880	No.2 side panels 1800x800mm (hxd) K	1	LF1880	No.2 side panels 1800x800mm (hxd) K	1
PB1601	Linear busbar holder In=1600A (75 kA)	8	PB1601	Linear busbar holder In=1600A (75 kA)	8
PC2400	Blind panel 200x400mm (hxw) K	10	PC2400	Blind panel 200x400mm (hxw) K	10
PC2600	Blind panel 200x600mm (hxw) M, K	2	PC2600	Blind panel 200x600mm (hxw) M, K	2
PC6600	Blind panel 600x600mm (hxw) M, K	1	PC6600	Blind panel 600x600mm (hxw) M, K	1
PS4720	4-instrument panel 72x72 200x600mm (hxw) M, K	1	PS4720	4-instrument panel 72x72 200x600mm (hxw) M, K	1
PV1841	Glass door 1800x400mm (hxw) K	2	PV1841	Glass door 1800x400mm (hxw) K	2
PV1881	Glass door 1800x800mm (hxw) K	1	PV1881	Glass door 1800x800mm (hxw) K	1
RF1840	Rear panel 1800x400mm (hxw) K	2	RF1840	Rear panel 1800x400mm (hxw) K	2
RF1880	Rear panel 1800x800mm (hxw) K	1	RF1880	Rear panel 1800x800mm (hxw) K	1
SK1800	No.4 ArTu K uprights h=1800mm	3	SK1800	No.4 ArTu K uprights h=1800mm	3
SK1803	No.2 funct. frames h=1800mm open K	2	SK1803	No.2 funct. frames h=1800mm open K	2
SK1880	Open frame int. cable cont. rear assembly h=1800mm	1	SK1880	Open frame int. cable cont. rear assembly h=1800mm	1
SK4080	ArTu K Base/Top/Base strip 400x800mm (wxd)	2	SK4080	ArTu K Base/Top/Base strip 400x800mm (wxd)	2
SK8080	ArTu K Base/Top/Base strip 800x800mm (wxd)	1	SK8080	ArTu K Base/Top/Base strip 800x800mm (wxd)	1
TV6221	No.2 funct. frame struct. crosspieces w=600mm	1	TV6221	No.2 funct. frame struct. crosspieces w=600mm	1
TV8001	No.2 Open frame struct. crosspieces d=800mm	2	TV8001	No.2 Open frame struct. crosspieces d=800mm	2
TV8011	No.2 structure crosspieces d=800mm	1	TV8011	No.2 structure crosspieces d=800mm	1
TV8211	No.2 structure crosspieces w=800mm	2	TV8211	No.2 structure crosspieces w=800mm	2
VC1823	Int. reduced cable cont.1800x200mm (hxw) K	1	VC1823	Int. reduced cable cont.1800x200mm (hxw) K	1

> Rapid selection table page 5/6 > In-depth technical information page 6/1 > Overall dimensions page 7/1

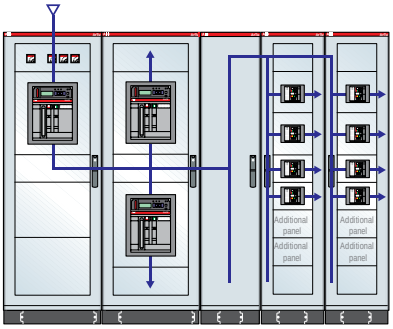

ArTu K Series dim. 1800x2280x700 (2031x2904x837) mm (external hxwxd) IP65 with Emax E1, T5, T3, XT3 1600A omnibus busbars and vertical 1250A branches - Icw 50kA

Code	Description	Q.ty	Code	Description	Q.ty
Tmax T kit			**Tmax XT kit**		
AD1014	Lateral side-by-side Kit, K	4	AD1014	Lateral side-by-side Kit, K	4
AD1069	No.4 connect. coupling busbars from 1250/1600A to 800A	3	AD1069	No.4 connect. coupling busbars from 1250/1600A to 800A	3
BA1250	Busbar In=1250A	4	BA1250	Busbar In=1250A	4
BA1600	Busbar In=1600A	12	BA1600	Busbar In=1600A	12
KE3215	Kit E1, E2, E3 vert. fixed without segreg. K	3	KE3215	Kit E1, E2, E3 vert. fixed without segreg. K	3
KT3419	T3 Kit 3/4P horiz. fixed without segreg. K	4	KX3411	XT3 Kit 3/4P horiz. fixed without segreg. K	4
KT5411	T5 Kit horiz. fixed 300x400mm (hxw) K	4	KT5411	T5 Kit horiz. fixed 300x400mm (hxw) K	4
LF1880	No.2 side panels 1800x800mm (hxd) K	1	LF1880	No.2 side panels 1800x800mm (hxd) K	1
PB1601	Linear busbar holder In=1600A (75 kA)	10	PB1601	Linear busbar holder In=1600A (75 kA)	10
PC2400	Blind panel 200x400mm (hxw) K	8	PC2400	Blind panel 200x400mm (hxw) K	8
PC2600	Blind panel 200x600mm (hxw) M, K	5	PC2600	Blind panel 200x600mm (hxw) M, K	5
PC6600	Blind panel 600x600mm (hxw) M, K	1	PC6600	Blind panel 600x600mm (hxw) M, K	1
PO1831	Blind door 1800x300mm (hxw) L, M int.	1	PO1831	Blind door 1800x300mm (hxw) L, M int.	1
PO1833	Blind door 1800x300mm (hxw) K ext.	1	PO1833	Blind door 1800x300mm (hxw) K ext.	1
PS4720	4-instrument panel 72x72 200x600mm (hxw)M, K	1	PS4720	4-instrument panel 72x72 200x600mm (hxw)M, K	1
PV1841	Glass door 1800x400mm (hxw) K	2	PV1841	Glass door 1800x400mm (hxw) K	2
PV1861	Glass door 1800x600mm (hxw) K	2	PV1861	Glass door 1800x600mm (hxw) K	2
RF1830	Cable container rear panel 1800x300mm (hxw) K	1	RF1830	Cable container rear panel 1800x300mm (hxw) K	1
RF1840	Rear panel 1800x400mm (hxw) K	2	RF1840	Rear panel 1800x400mm (hxw) K	2
RF1860	Rear panel 1800x600mm (hxw) K	2	RF1860	Rear panel 1800x600mm (hxw) K	2
SK1800	No.4 ArTu K uprights h=1800mm	5	SK1800	No.4 ArTu K uprights h=1800mm	5
SK1803	No.2 funct. frames h=1800mm open K	4	SK1803	No.2 funct. frames h=1800mm open K	4
SK4080	ArTu K Base/Top/Base strip 400x800mm (wxd)	2	SK4080	ArTu K Base/Top/Base strip 400x800mm (wxd)	2
SK6080	ArTu K Base/Top/Base strip 600x800mm (wxd)	2	SK6080	ArTu K Base/Top/Base strip 600x800mm (wxd)	2
TV6221	No.2 funct. frame struct. crosspieces w=600mm	2	TV6221	No.2 funct. frame struct. crosspieces w=600mm	2
TV8001	No.2 Open frame struct. crosspieces d=800mm	2	TV8001	No.2 Open frame struct. crosspieces d=800mm	2
TV8011	No.2 structure crosspieces d=800mm	2	TV8011	No.2 structure crosspieces d=800mm	2
TV8211	No.2 structure crosspieces w=800mm	2	TV8211	No.2 structure crosspieces w=800mm	2
VC3080	Cable container 300x800mm (wxd) K	1	VC3080	Cable container 300x800mm (wxd) K	1

> Rapid selection table page 5/6 > In-depth technical information page 6/1 > Overall dimensions page 7/1

ArTu K Modular Structures
Examples of configurations

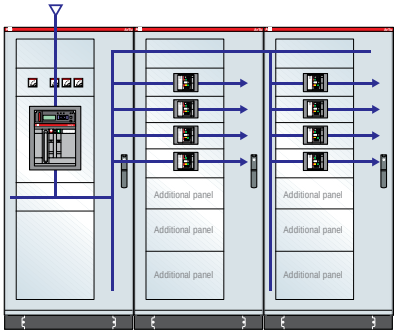

5

ArTu K Series dim. 1800x2400x700 (2031x2784x837) mm (external hxwxd) IP65 with Emax E1, T4 , T1, XT4, XT1, 1600A omnibus busbars and vertical 1250A branches - Icw 50kA

Code	Description	Q.ty	Code	Description	Q.ty
Tmax T kit			**Tmax XT kit**		
AD1014	Lateral side-by-side kit, K	2	AD1014	Lateral side-by-side kit, K	2
AD1069	No.4 connect. coupling busbars from 1250/1600A to 800A	3	AD1069	No.4 connect. coupling busbars from 1250/1600A to 800A	3
BA1250	Busbar In=1250A	5	BA1250	Busbar In=1250A	5
BA1600	Busbar In=1600A	11	BA1600	Busbar In=1600A	11
KE3215	Kit E1, E2, E3 vert. fixed without segreg. K	1	KE3215	Kit E1, E2, E3 vert. fixed without segreg. K	1
KT1111	Kit T1 3/4P horiz. fixed without segreg. K	2	KX1611	Kit XT1 3/4P horiz. fixed without segreg. K	2
KT4111	T4 Kit hor. fixed+access.200x600mm (hxw) K	6	KX4611	XT4 Kit hor. fixed+access.200x600mm (hxw) K	6
LF1880	No.2 side panels 1800x800mm (hxd) K	1	LF1880	No.2 side panels 1800x800mm (hxd) K	1
PB1601	Linear busbar holder In=1600A (75 kA)	12	PB1601	Linear busbar holder In=1600A (75 kA)	12
PC2600	Blind panel 200x600mm (hxw) M, K	6	PC2600	Blind panel 200x600mm (hxw) M, K	6
PC3600	Blind panel 300x600mm (hxw) M, K	4	PC3600	Blind panel 300x600mm (hxw) M, K	4
PC6600	Blind panel 600x600mm (hxw) M, K	1	PC6600	Blind panel 600x600mm (hxw) M, K	1
PS4720	4-instrument panel 72x72 200x600mm (hxw)M, K	1	PS4720	4-instrument panel 72x72 200x600mm (hxw)M, K	1
PV1881	Glass door 1800x800mm (hxw) K	3	PV1881	Glass door 1800x800mm (hxw) K	3
RF1880	Rear panel 1800x800mm (hxw) K	3	RF1880	Rear panel 1800x800mm (hxw) K	3
SK1800	No.4 ArTu K uprights h=1800mm	3	SK1800	No.4 ArTu K uprights h=1800mm	3
SK1880	Open frame int. cable cont. rear assembly h=1800mm	1	SK1880	Open frame int. cable cont. rear assembly h=1800mm	1
SK8080	ArTu K Base/Top/Base strip 800x800mm (wxd)	3	SK8080	ArTu K Base/Top/Base strip 800x800mm (wxd)	3
TV6221	No.2 funct. frame struct. crosspieces w=600mm	1	TV6221	No.2 funct. frame struct. crosspieces w=600mm	1
TV8001	No.2 open frame struct. crosspieces d=800mm	2	TV8001	No.2 open frame struct. crosspieces d=800mm	2
TV8011	No.2 structure crosspieces d=800mm	1	TV8011	No.2 structure crosspieces d=800mm	1
TV8211	No.2 structure crosspieces w=800mm	1	TV8211	No.2 structure crosspieces w=800mm	1
VC1823	Int. reduced cable cont.1800x200mm (hxw) K	3	VC1823	Int. reduced cable cont.1800x200mm (hxw) K	3

> Rapid selection table page 5/6 > In-depth technical information page 6/1 > Overall dimensions page 7/1

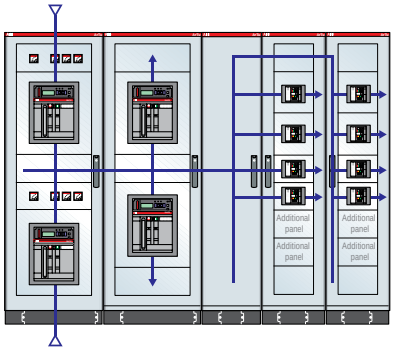

ArTu K Series dim. 1800x2280x700 (2031x2900x837) mm (external hxwxd) IP65 with Emax E2, T5, T3, XT3 3200A omnibus busbars and vertical 1600A branches - Icw 65kA

Code	Description	Q.ty	Code	Description	Q.ty
Tmax T kit			**Tmax XT kit**		
AD1014	Lateral side-by-side Kit, K	4	AD1014	Lateral side-by-side Kit, K	4
AD1073	No.4 busbar section T-couplings 3200A	1	AD1073	No.4 busbar section T-couplings 3200A	1
AD1078	No.4 connect. coupling busbars from 3200A to 1600/1250A	1	AD1078	No.4 connect. coupling busbars from 3200A to 1600/1250A	1
BA1600	Busbar In=1600A	4	BA1600	Busbar In=1600A	4
BA2000	Busbar In=2000A	20	BA2000	Busbar In=2000A	20
KE3215	Kit E1, E2, E3 vert. fixed without segreg. K	4	KE3215	Kit E1, E2, E3 vert. fixed without segreg. K	4
KT3419	T3 Kit 3/4P horiz. fixed without segreg. K	3	KX3411	XT3 Kit 3/4P horiz. fixed without segreg. K	3
KT5411	T5 Kit horiz. fixed 300x400mm (hxw) K	4	KT5411	T5 Kit horiz. fixed 300x400mm (hxw) K	4
LF1880	No.2 side panels 1800x800mm (hxd) K	1	LF1880	No.2 side panels 1800x800mm (hxd) K	1
PB1601	Linear busbar holder In=1600A (75 kA)	6	PB1601	Linear busbar holder In=1600A (75 kA)	6
PB3201	Linear busbar holder In=3200A (75 kA)	12	PB3201	Linear busbar holder In=3200A (75 kA)	12
PC2400	Blind panel 200x400mm (hxw) K	8	PC2400	Blind panel 200x400mm (hxw) K	8
PC2600	Blind panel 200x600mm (hxw) M, K	5	PC2600	Blind panel 200x600mm (hxw) M, K	5
PO1831	Blind door 1800x300mm (hxw) L, M int.	1	PO1831	Blind door 1800x300mm (hxw) L, M int.	1
PO1833	Blind door 1800x300mm (hxw) K ext.	1	PO1833	Blind door 1800x300mm (hxw) K ext.	1
PS4720	4-instrument panel 72x72 200x600mm (hxw) M, K	1	PS4720	4-instrument panel 72x72 200x600mm (hxw) M, K	1
PV1841	Glass door 1800x400mm (hxw) K	2	PV1841	Glass door 1800x400mm (hxw) K	2
PV1861	Glass door 1800x600mm (hxw) K	2	PV1861	Glass door 1800x600mm (hxw) K	2
RF1830	Cable container rear panel 1800x300mm (hxw) K	1	RF1830	Cable container rear panel 1800x300mm (hxw) K	1
RF1840	Rear panel 1800x400mm (hxw) K	2	RF1840	Rear panel 1800x400mm (hxw) K	2
RF1860	Rear panel 1800x600mm (hxw) K	2	RF1860	Rear panel 1800x600mm (hxw) K	2
SK1800	No.4 ArTu K uprights h=1800mm	5	SK1800	No.4 ArTu K uprights h=1800mm	5
SK1803	No.2 funct. frames h=1800mm open K	4	SK1803	No.2 funct. frames h=1800mm open K	4
SK1880	Open frame int. cable cont. rear assembly h=1800mm	1	SK1880	Open frame int. cable cont. rear assembly h=1800mm	1
SK4080	ArTu K Base/Top/Base strip 400x800mm (wxd)	2	SK4080	ArTu K Base/Top/Base strip 400x800mm (wxd)	2
SK6080	ArTu K Base/Top/Base strip 600x800mm (wxd)	2	SK6080	ArTu K Base/Top/Base strip 600x800mm (wxd)	2
TV6221	No.2 funct. frame struct. crosspieces w=600mm	2	TV6221	No.2 funct. frame struct. crosspieces w=600mm	2
TV8001	No.2 open frame struct. crosspieces d=800mm	3	TV8001	No.2 open frame struct. crosspieces d=800mm	3
TV8011	No.2 structure crosspieces d=800mm	2	TV8011	No.2 structure crosspieces d=800mm	2
TV8101	No.2 int./ext. cable cont. crosspieces d=800mm	3	TV8101	No.2 int./ext. cable cont. crosspieces d=800mm	3
TV8211	No.2 structure crosspieces w=800mm	2	TV8211	No.2 structure crosspieces w=800mm	2
VC3080	Cable container 300x800mm (wxd) K	2	VC3080	Cable container 300x800mm (wxd) K	2

> Rapid selection table page 5/6 > In-depth technical information page 6/1 > Overall dimensions page 7/1

ArTu K Modular Structures
Examples of configurations

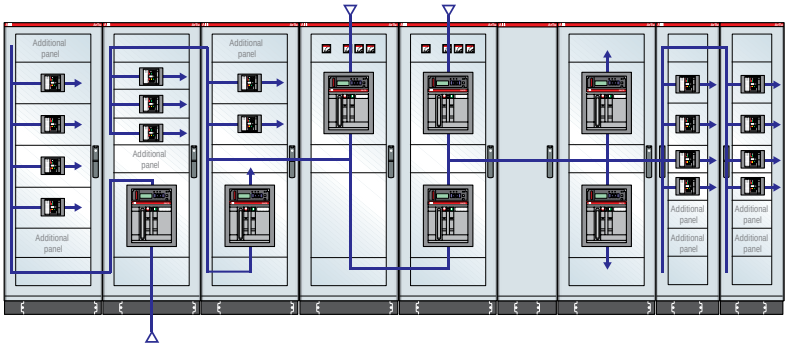

ArTu K Series dim. 1800x4680x900 (2031x5804x1037) mm. (external hxwxd) IP65 with Emax E3, T5, T3, XT3, 3200A omnibus busbars and vertical 1600A branches - Icw 50kA

5

Code	Description	Q.ty	Code	Description	Q.ty
Tmax T kit			**Tmax XT kit**		
AD1014	Lateral side-by-side Kit, K	8	AD1014	Lateral side-by-side Kit, K	8
BP1600	No.2 busbar holders x cross-section 10mm	9	BP1600	No.2 busbar holders x cross-section 10mm	9
BP3200	No.2 busbar holders 3 phase busbars cross-sect. 10mm	6	BP3200	No.2 busbar holders 3 phase busbars cross-sect. 10mm	6
BR1600	No.2 busbars cross-section100x10mm w=1750mm	29	BR1600	No.2 busbars cross-section100x10mm w=1750mm	29
KE3215	Kit E1, E2, E3 vert. fixed without segreg. K	7	KE3215	Kit E1, E2, E3 vert. fixed without segreg. K	7
KT3119	T3 Kit 3/4P horiz. fixed without segreg. K	3	KX3611	XT3 Kit 3/4P horiz. fixed without segreg. K	3
KT3419	T3 Kit 3/4P horiz. fixed without segreg. K	4	KX3611	XT3 Kit 3/4P horiz. fixed without segreg. K	4
KT5111	Hor. fixed T5 Kit+accessories 300x600mm (hxw) K	6	KT5111	Hor. fixed T5 Kit+accessories 300x600mm (hxw) K	6
KT5411	T5 Kit horiz. fixed 300x400mm (hxw) K	4	KT5411	T5 Kit horiz. fixed 300x400mm (hxw) K	4
LF1810	No.2 side panels 1800x1000mm (hxd) K	1	LF1810	No.2 side panels 1800x1000mm (hxd) K	1
PC2400	Blind panel 200x400mm (hxw) K	8	PC2400	Blind panel 200x400mm (hxw) K	8
PC2600	Blind panel 200x600mm (hxw) M, K	16	PC2600	Blind panel 200x600mm (hxw) M, K	16
PC6600	Blind panel 600x600mm (hxw) M, K	1	PC6600	Blind panel 600x600mm (hxw) M, K	1
PO1831	Blind door 1800x300mm (hxw) L, M int.	1	PO1831	Blind door 1800x300mm (hxw) L, M int.	1
PO1833	Blind door 1800x300mm (hxw) K ext.	1	PO1833	Blind door 1800x300mm (hxw) K ext.	1
PS4720	4-instrument panel 72x72 200x600mm (hxw) M, K	2	PS4720	4-instrument panel 72x72 200x600mm (hxw) M, K	2
PV1841	Glass door 1800x400mm (hxw) K	2	PV1841	Glass door 1800x400mm (hxw) K	2
PV1861	Glass door 1800x600mm (hxw) K	6	PV1861	Glass door 1800x600mm (hxw) K	6
RF1830	Cable container rear panel 1800x300mm (hxw) K	1	RF1830	Cable container rear panel 1800x300mm (hxw) K	1
RF1840	Rear panel 1800x400mm (hxw) K	2	RF1840	Rear panel 1800x400mm (hxw) K	2
RF1860	Rear panel 1800x600mm (hxw) K	6	RF1860	Rear panel 1800x600mm (hxw) K	6
SK1800	No.4 ArTu K uprights h=1800mm	9	SK1800	No.4 ArTu K uprights h=1800mm	9
SK1803	No.2 funct. frames h=1800mm open K	8	SK1803	No.2 funct. frames h=1800mm open K	8
SK4010	ArTu K Base/Top/Base strip 390x1000mm (wxd)	2	SK4010	ArTu K Base/Top/Base strip 390x1000mm (wxd)	2
SK6010	ArTu K Base/Top/Base strip 600x1000mm (wxd)	6	SK6010	ArTu K Base/Top/Base strip 600x1000mm (wxd)	6
TR1201	No.2 hor. struct. busbar crosspieces d=1000mm	6	TR1201	No.2 hor. struct. busbar crosspieces d=1000mm	6
TV1001	No.2 open frame struct. crosspieces d=1000mm	15	TV1001	No.2 open frame struct. crosspieces d=1000mm	15
TV1211	No.2 structure crosspieces d=1000mm	6	TV1211	No.2 structure crosspieces d=1000mm	6
VC3010	ArTu K Base/Top/Base strip 300x1000mm (wxd)	1	VC3010	ArTu K Base/Top/Base strip 300x1000mm (wxd)	1

> Rapid selection table page 5/6 > In-depth technical information page 6/1 > Overall dimensions page 7/1

In-depth technical information

Gemini

Compliance with Standards and technical characteristics 6/2
IP degree of protection 6/4
IK degree of resistance to impacts 6/5
Double insulation 6/6
Self-extinguishing tests 6/6
Resistance to chemical agents 6/7
Disposal instructions 6/8

ArTu distribution switchgear

Mechanical and electrical characteristics 6/10
Declaration of conformity 6/12
Dissipated power 6/13
Handling 6/21
Electrical continuity 6/23
Equipotential conductors 6/24
Degrees of protection 6/26
IK mechanical resistance to impact 6/28

Busbars with shaped section and flat busbars

Mechanical and electrical characteristics 6/29
Busbar with shaped section
Busbar holders 6/30
Components 6/32
Flat busbar 6/34
Components 6/35

Unifix cabling system

Examples of connections - Unifix H 6/36
Examples of connections - Unifix L 6/37

Segregations

Examples of ArTu segregation 6/38

Special painting

RAL colour 6/39

In-depth technical information
Gemini switchboards

Compliance with Standards and technical characteristics

References Standard

The IEC 62208 Standard ("Empty enclosures for assembled protection and operating apparatus for low voltage. General Prescriptions") has implemented the EN 50298 Standard reissued in EN 62208 internationally, and is the reference for the Gemini switchboards: as its subject, it has formulation of the definitions, classifications, characteristics and testing prescriptions for enclosures destined for uses in accordance with the EN 60439 Standards and the new IEC 61439-1-2 Standard as part of protection and operating apparatus (switchboards), whose rated voltage does not exceed 1000 V in alternating current for frequencies up to 1000 Hz or 1500 V in direct current and suitable for general use in both indoor and outdoor applications.

The Standard refers to empty enclosures, before the user installs protection and operating apparatus.

The Standard does not apply to enclosures which, due to their construction and functional characteristics, are subject to other prescriptions (e.g. enclosures for domestic and similar installations). In this case, the IEC 60670 – CEI 23-48 Standards are the reference ("Enclosures for apparatus for fixed electrical installations for domestic and similar uses.

Part 1: general prescriptions") and CEI 23-49 ("Enclosures for apparatus for fixed electrical installations for domestic and similar uses.

Part 2: special prescriptions for enclosures destined to contain protection devices and apparatus which dissipate a power that is not negligible").

On the basis of what is indicated by ABB SACE in the table of technical characteristics, if, necessary, the installer must certify conformity with the CEI 23-51 ("Prescriptions for constructing, checking and testing distribution switchboards for fixed installations for domestic and similar use") or EN 60439-1/IEC 61439-1-2 Standards.

Compliance with Standards and technical characteristics

Table of Gemini switchboards' technical characteristics

Size	1	2	3	4	5	6
Gemini with transparent door	**1SL0211A00**	**1SL0212A00**	**1SL0213A00**	**1SL0214A00**	**1SL0215A00**	**1SL0216A00**
Gemini with opaque door	**1SL0201A00**	**1SL0202A00**	**1SL0203A00**	**1SL0204A00**	**1SL0205A00**	**1SL0206A00**
External dimensions WxHxD (mm)	335x400x210	460x550x260	460x700x260	590x700x260	590x855x360	840x1005x360
Internal dimensions WxHxD (mm)	250x300x180	375x450x230	375x600x230	500x600x230	500x750x330	750x900x330
IP degree	IP66	IP66	IP66	IP66	IP66	IP66
Double isolation	yes	yes	yes	yes	yes	yes
IK degree	10	10	10	10	10	10
GWT (°C)	750	750	750	750	750	750
Operating temperature	-25 °C … +100 °C	-25 °C … +100 °C	-25 °C … +100 °C	-25 °C … +100 °C	-25 °C … +100 °C	-25 °C … +100 °C
No. of DIN modules	24 (12x2)	54 (18x3)	72 (18x4)	96 (24x4)	120 (24x5)	216 (36x6)
No. of vertical modules (H=150 mm)	2	3	4	4	5	6
Material	Thermoplastic	Thermoplastic	Thermoplastic	Thermoplastic	Thermoplastic	Thermoplastic
Color	Grey RAL7035	Grey RAL7035	Grey RAL7035	Grey RAL7035	Grey RAL7035	Grey RAL7035
Fast wiring system	Unifix L	Unifix L	Unifix L	Unifix L	Unifix L	Unifix L
No. of locks	2	2	2	2	3	3
Rated frequency	50-60 Hz	50-60 Hz	50-60 Hz	50-60 Hz	50-60 Hz	50-60 Hz
NORMA CEI 23-51[1] - IEC 61439-1-2						
Max. potenza dissipabile [2]	45 W	72 W	85 W	102 W	156 W	248 W
STANDARD CEI EN 60439-1 Over-temperature (par. 8.2.1) [3]						
Max. dispersible power with over-temperature of 25 °C	40 W	65 W	77 W	91 W	133 W	205 W
Max. dispersible power with over-temperature of 30 °C	45 W	72 W	85 W	102 W	156 W	248 W
Max. dispersible power with over-temperature of 35 °C	52 W	85 W	100 W	121 W	187 W	299 W
Max. dispersible power with over-temperature of 40 °C	62 W	100 W	118 W	143 W	221 W	355 W
Impulse withstand (par. 8.2.2)						
- Rated service voltage	≤ 690 V	≤ 690 V	≤ 690 V	≤ 690 V	≤ 690 V	≤ 690 V
- Rated insulation voltage AC	≤ 1000 V	≤ 1000 V	≤ 1000 V	≤ 1000 V	≤ 1000 V	≤ 1000 V
- Rated insulation voltage DC	≤ 1500 V	≤ 1500 V	≤ 1500 V	≤ 1500 V	≤ 1500 V	≤ 1500 V
- Rated impulse withstand voltage	8 kV	8 kV	8 kV	8 kV	8 kV	8 kV

[1] **Limits of Applicability of the CEI 23-51 Standard**
The Standard is only applicable if the cabled switchboard fulfils all the following conditions:
fixed installation with average ambient temperature up to 25 °C, occasionally up to 35 °C;
alternating current with rated voltage up to 440 V;
rated incoming current up to 125 A;
rated prospective short-circuit current up to 10 kA or protection using current-limiting devices with limited current up to 15 kA in correspondence with their rated breaking capacity.
[2] The data on the maximum dissipated power were taken following the indications in the CEI 23-49 Standard, with a temperature difference of Dt=30 °C.

[3] **Note to paragraph 8.2.1 of Standard CEI EN 60439-1**

The table gives the thermal dissipation values of Gemini switchboards when they are wall-mounted. The dispersible power figures (in Watts) vary according to the overtemperature allowed in the accessible parts of the switchboard and must be compared with the total amount of power dissipated by all the components installed inside the switchboard taking into due account the factor of contemporaneity.

In-depth technical information
Gemini switchboards

IP degree of protection

1st number according to EN 60529 Standard
As indicated in the following table, the IP degree of protection is expressed by two characteristic numbers depending on the behaviorof the product to which it refers according to the prescriptions of CEI 70-1 and IEC 529 Standards.

2nd number according to CEI 70-1 IEC 60529 Standard
With IP66 degree of protection, Gemini switchboards are totally protected against the penetration of dusts and sprays of seawater.

1st Number: protection against the penetration of solid bodies	2nd Number: protection against the penetration of water
1 No protection	1 No protection
2 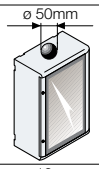 Protection against the penetration of solid bodies with a diameter of over 50 mm	2 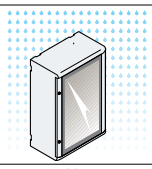 Protection against the penetration of drops of water falling vertically
3 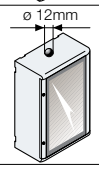 Protection against the penetration of solid bodies with a diameter of over 12 mm or a length of over 80 mm	3 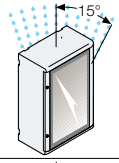 Protection against the penetration of drops of water falling at an angle of up to 15° from vertical
4 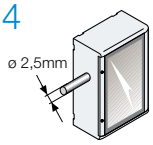 Protection against the penetration of solid bodies with a diameter or thickness of over 2.5 mm	4 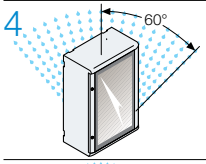 Protection against the penetration of drops of water falling at an angle of up to 60° from vertical
5 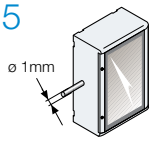 Protection against the penetration of solid bodies with a diameter or thickness of over 1.0 mm	5 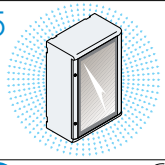 Protection against the penetration of splashes of water from all directions
6 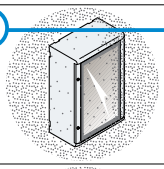 **Gemini** Protection against the penetration of dusts	6 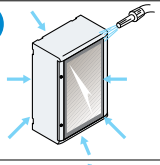 Protection against the penetration of water sprayed by a hose from all directions
7 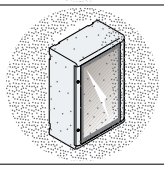 Total protection against the penetration of dusts	7 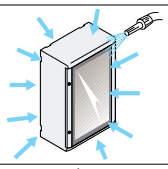 Protection against the penetration of sea water
	8 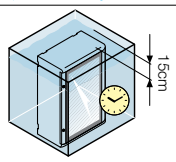 Protection against the penetration of water during temporary immersion
	9 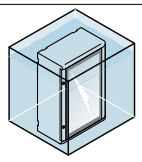 Protection against the penetration of water during continual immersion

IK degree of resistance to impacts

IK degree according to EN 62262 reference Standard.
The method specified in the EN 62262 Standard to determine the IK degree of resistance to impact is indicated in the table below. It specifies the resistance of equipment to impact. The proof consists in let a weight falling down from a pre-established height. The degree of resistance to impacts is therefore obtained and it is expressed in Joules

IK 0

No protection against impacts

IK 01

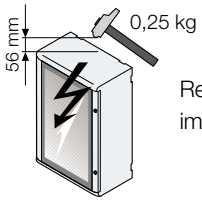

Resistance to impacts with impact energy up to **0,150** J

IK 02

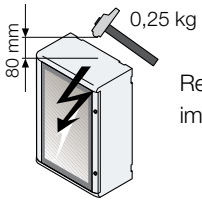

Resistance to impacts with impact energy up to **0,200** J

IK 03

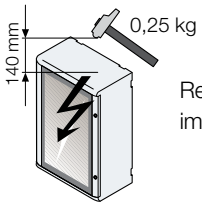

Resistance to impacts with impact energy up to **0,350** J

IK 04

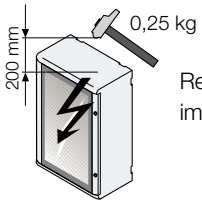

Resistance to impacts with impact energy up to **0,500** J

IK 05

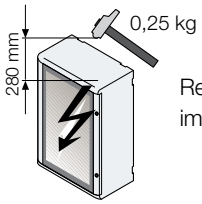

Resistance to impacts with impact energy up to **0,700** J

IK 06

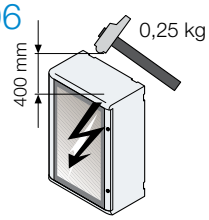

Resistance to impacts with impact energy up to **1,00** J

IK 07

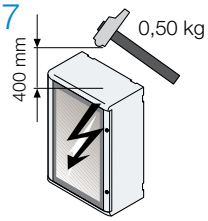

Resistance to impacts with impact energy up to **2,00** J

IK 08

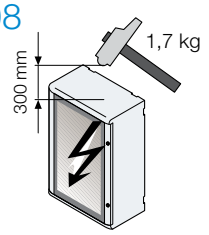

Resistance to impacts with impact energy up to **5,00** J

IK 09

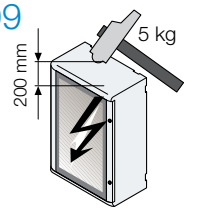

Resistance to impacts with impact energy up to **10,00** J

IK 10 Gemini

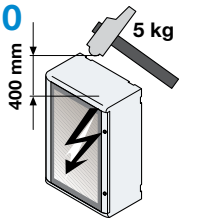

Resistance to impacts with impact energy up to **20,00** J

In-depth technical information
Gemini switchboards

Double insulation

Double insulation guarantees that Gemini is protected against indirect contacts on condition that the manufacturer's instructions are observed when carrying out mounting and wiring operations on the switchboard and that the appropriate accessories are used (e.g. screw-cover caps).

Self-extinguishing tests

Test text	Equipment required	Compliance with Standards	Purpose of the test	Test results	Test conditions		
					Heat source	Length of test	Character. elements
Glow wire (GLOW WIRE TEST)	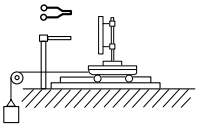	IEC 695-2-1 CEI 50-11	To assess the danger of fire by simulating thermal stresses produced by heat sources or by ignition (e.g. glowing elements, resistances overloaded for short intervals)	If a flame is generated, it must go out within 30 seconds of removing the glow wire. The test is conducted at temperatures of: - 650°C - 750°C - 850°C - 960°C	Glow wire ø 4 mm	30 sec.	Assessment of the time it takes for the flame to go out

6

Resistance to chemical agents

The behavior of Gemini switchboards in the presence of chemical agents is indicated in the table with the symbols:

	High resistance	Limited resistance
Cold water	•	
Hot water	•	
Sulfuric acid 50%	•	
Hydrochloric acid 36%	•	
Acetic acid 60%	•	
Benzol		•
Gasoline		•
Acetone	•	
Ethyl alcohol	•	
Ammonia	•	
Dichlromethane		•
Diesel oil - naphtha		•
Mineral oils and greases	•	
Food oils and greases	•	
Perchloroethylene		•
Trichlorethene		•
Ethylether	•	
Toluene		•
Methanol	•	
Wine	•	
Fruit juices	•	
Laundry lye	•	
Detergents	•	

In-depth technical information
Gemini switchboards

Disposal instructiones

Information about how to dispose of Gemini switchboards when they reach the end of their life

Instructions are given below about the procedures to adopt when disposing of Gemini switchboards at the end of their life cycle. The text is drafted in the form of a table referring to Standard CEI 308-1 “Information table concerning the end of life of electric and electronic products and a compilation guide”, 2002-04, ed. 1, pamphlet number 308-1 6454.

Section I – Global product specification

Name	Type of product			
Size	With transparent door	With opaque door	Rated weight [kg]	External dimensions WxHxD (mm)
1	1SL0211A00	1SL0201A00	4,3	335x400x210
2	1SL0212A00	1SL0202A00	7,9	460x550x260
3	1SL0213A00	1SL0203A00	9,5	460x700x260
4	1SL0214A00	1SL0204A00	12,0	590x700x260
5	1SL0215A00	1SL0205A00	17,8	590x855x360
6	1SL0216A00	1SL0206A00	21,1	840x1005x360

Section II – Global product table

General code: CER 17 02 03 plastic (more than 95% of the product’s weight)

No. of the component part P1, P2, etc.)	Diagram	Quantity % over total weight	Material description	Symbol	Dangerousness (Yes/No)	CER Code
P1/BOX	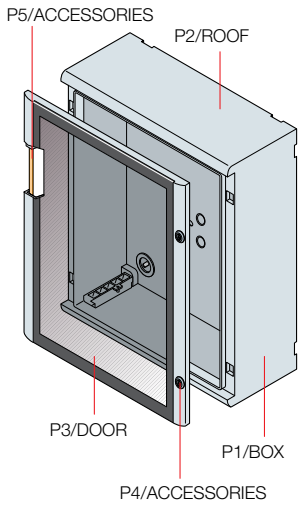	~ 80%	Polypropylene	>PP<	No	17 02 03
P2/ROOF			Polypropylene	>PP<	No	17 02 03
P3/DOOR		~ 20%	Polycarbonate	>PC<	No	17 02 03
P4/ACCESSORIES		< 5%	Steel	-	No	17 04 05
P5/ACCESSORIES		< 5%	Brass	-	No	17 04 01

Disposal instructiones

Section III – Components to be removed from the product and sent for separate treatment

Refer to section II of the table for a description of the materials.

Notes for recovery and disposal

At the end of its life, after separating it from components, the product can be sent to be recovered.
The product is not biodegradable: do not dispose of it in the environment.
The product/waste product is assimilable as solid urban waste. It must be incinerated or disposed of in compliance with current EEC, national and local regulations. You are recommended to check all reutilization possibilities.

Other recommendations

The information in this table relates to the product in the condition it was supplied. Assembled parts coming from different supplies must be treated separately according to the reference specifications of the respective manufacturers.

Section IV – Safety instructions

Handling

No special instructions. Refer to the general regulations concerning hygiene on the workplace when using.
The product's main components contain mineral additives and coloring agents in concentrations that comply with current European Directives at the time this catalogue went to press: they do not contain substances classified as dangerous.

Transport

No special instructions.

Storage

No gas or harmful vapors are released during storage. Thermal decomposition in the event of fire or combustion may release dangerous products: if this should occur, specific means of protection must be used. In the event of fire, conventional fire extinguishing instruments are recommended (atomized water, foam, carbon dioxide, powder).
Empty packages are not contaminated by the product and can therefore be recycled or reused.

Utilization

No special instructions.

Other instructions

The information given in this section is based on current ABB SACE know-how and is aimed at describing the product only for environmental, health and safety purposes. It must not, therefore, be considered as a guarantee of specific properties. ABB SACE assumes no responsibility for the behavior of buyers that do not comply with the information given in this table and for incorrect or improper usages of the product or usages that cannot reasonably be envisaged.

In-depth technical information
ArTu distribution switchgear

Mechanical and electrical characteristics

Conformity with the CEI EN 60439-1/IEC 61439-1-2 Standard

The ArTu switchboards have undergone the type tests foreseen by the CEI EN 60439-1 Standard and the new IEC 61439-1-2 Standard at the ABB type test laboratories. The results of these tests guarantee the performances of the ArTu switchboards and allow the end constructor of the switchboard using ABB SACE metal structures, air, moulded-case and modular circuit-breakers, not to carry out further type tests, respecting the selection criteria and the assembly instructions of the various components. These results, given below, can be referred to for drawing up the declaration of conformity of the electric switchboard.

Overtemperature (Ref. par. 8.2.1. of the Standard)

In the tables on page 5/5 and following, the thermal dissipation values are indicated, referring to all the dimensions of the ArTu switchboards and to the type of installation, deriving from the type tests carried out. The dissipated power data (in Watts) are according to the admissible overtemperature inside the switchboard in the upper part, and must be compared with the sum of the powers dissipated by all the components installed inside the switchboard (taking appropriately into account the factor of contemporaneity).

Dielectric properties (Ref. par. 8.2.2 of the Standard)

	Wall-mounted ArTu L D=200mm	Floor-standing ArTu L D=250mm	Wall-mounted ArTu M D=150/200mm	ArTu M floor ArTu K D=250mm	ArTu K
Rated service voltage:	up to 690V AC	up to 690V AC	up to 690V AC	up to 690V AC	up to 1000V AC
Rated insulation voltage:	up to 1000V AC	up to 1000V AC	up to 1000V AC	up to 1000V AC	up to 1000V AC
Rated impulse withstand voltage:	6 kV	8 kV	6 kV	8 kV	8 kV

Short-circuit withstand current (Ref. par. 8.2.3 of the Standard)

		Wall-mounted ArTu L D=200mm	Floor-standing ArTu L D=250mm	Wall-mounted ArTu M D=150/200mm	ArTu M floor ArTu K D=250mm	ArTu K
Rated short-time short-circuit current:	phase-phase	25 kA (1s)	35 kA (1s)	25 kA (1s)	35 kA (1s)	105kA (1s) 50kA (3s)
	phase-neutral	9 kA (1s)	21 kA (1s)	9kA (1s)	21 kA (1s)	60 kA (1s)
Rated max. peak short-circuit current		52,5kA	73kA	52,5kA	73kA	254kA

Efficiency of the protection circuit (Ref. par. 8.2.4 of the Standard)

		Wall-mounted ArTu L D=200mm	Floor-standing ArTu L D=250mm	Wall-mounted ArTu M D=150/200mm	ArTu M floor ArTu K D=250mm	ArTu K
	(Ref. par. 8.2.4.1):	Following the assembly indications of the metal components, the effective electrical continuity between the exposed conductive parts is verified, with negligible resistance values.				
	(Ref par. 8.2.4.2):	Protection circuit short-circuit withstand current: phase-earthing busbar				
		9 kA (1s)	21 kA (1s)	9 kA (1s)	21 kA (1s)	60 kA (1s)

Insulation distances (Ref. par. 8.2.5 of the Standard)

The insulation distances are guaranteed by following the ABB SACE metalwork structure and circuit-breaker assembly and mounting instructions.

Mechanical operation (Ref. par. 8.2.6 of the Standard)

Mechanical operation is verified by following the assembly and mounting instructions for the ABB SACE metalwork structures and circuit-breakers.

Degree of protection (Ref. par. 8.2.7 of the Standard) According to CEI EN 60529 (CEI 70-1 publication IEC 529)

	Wall-mounted ArTu L D=200mm	Floor-standing ArTu L D=250mm	Wall-mounted ArTu M D=150/200mm	ArTu M floor ArTu K D=250mm	ArTu K
Without door	IP31	IP31	-	IP 31	IP31
With door/without door and ventilated side panels	-	-	-	-	IP41
With door	IP43	IP43	IP 65	IP 65	IP 65

Mechanical characteristics

Material		
ArTu L structure	12/10mm thick pickled steel sheet	
ArTu M structure	15/10mm thick pickled steel sheet (floor-mounted) / 15/10mm hot galvanised sheet (wall-mounted)	
ArTu K structure	15/10mm thick steel sheet	
Panels	12/15/10mm thick steel sheet	
Doors	15/10mm hot galvanised steel sheet. 4mm thick glass tempered from inside	
Plates	hot galvanised steel sheet, thickness: Plates 20/25/10mm	

Painting		
Structure colour	Grey orange-peel RAL 7035	
Base strip colour	Grey orange-peel RAL 7012	
Standard cycle	Sheet washing	
	Phosphating with iron salt base	
	Drying in tunnel at 100°C	
	External and internal painting with electrostatic application of thermosetting powder enamel with epoxy polyester	
	binders. Grey orange-peel RAL 7035 colour, total thickness: 60/70 micron.	
	Polymerisation in oven at 180°C.	
Paint characteristics	Binder:	epossipoliestere
	Specific gravity:	1,61g/cm3
	Theoretical coverage:	10,4 m2/Kg. con film di spessore medio 60 micron
	Melting point:	85-95 °C (Metodo banco Kofler)
	Granulometry:	standard distribution between 5 and 100 micron with average size particles between 30 and 40 micron. Hardening: 12 min. at 190 °C (temperature of object)
	Hardness:	1H - 2H
	DIN 53152 bending elasticity:	unaltered on 1/4" spindle
	DIN 53151 reticular adherence:	GT 0 (100%)
	Erichem elasticity:	SEN DIN 53156: > 6mm
	Gardner resistance to impact:	25 Kg. x cm.

Tests carried out on degreased and phosphated sheets with film thickness of 60/70 micron.
The painting has passed the resistance tests to saline fog (193 hours).

Ambient characteristics		
Type of installation	indoors	
Installation conditions	Wall / Floor-mounted	
Service climate (t° / r.h. %)	constant	23°C/83% - 40°C/93%
	variable	23°C/98% - 40°C/98%
Ambient temperature limits	operating	-5°C +40°C
	storage	-25°C +55°C

In-depth technical information
ArTu distribution switchgear

ABB SACE declaration of conformity

ArTu switchgear with the following rated characteristics:		
Rated service voltage	up to 690V / up to 1000V for ArTu K	
Rated insulation voltage	up to 1000V	
Rated current / ICW	ArTu L wall-mounted	up to 250 A / 25 kA
	ArTu L floor-mounted	up to 800 A / 35 kA
	ArTu K	up to 4000 A / up to 105 kA
	ArTu M floor-mounted and K D=250mm	up to 630 A / 35 kA
	ArTu M D=150/200mm	up to 250 A / 25 kA
Grado di protezione	ArTu L	IP31 (without door), IP 43 (with door)
	ArTu K	IP31 (without door), IP41 (with door and side ventilation), IP65 (with door)
	ArTu M D=250mm	IP31 (without door), IP65 (with door)
	ArTu M D=150/200mm	IP 65 (with door)

When correctly selected and assembled, as per the indications given in this catalogue and in the instruction manual, allow construction of switchgear complying with the IEC 60439-1/IEC 61439-1-2Standard, on the basis of what is foreseen by the Low Voltage Directive of the European Community (Directive 73/23/EEC, Law 791/1977).

The above is valid if the switchgear is designed and constructed:
- selecting the materials according to the performances indicated in the ABB catalogues;
- sizing the conductors according to the prescriptions of the IEC 60439-1 and CEI 64-8 Standards;
- carrying out the individual tests foreseen under the IEC 60439-1 Standard successfully.

Technical information

Information regarding the methods for disposal and end of product life

ABB SACE has carried out a study on the end of product life. Evaluation is made by means of applying the LCA (Life Cycle Assessment) method according to ISO 14040 - 1997 and in conformity with the requirements established by the SEMC in the document ISO TR 14025 TYPE III Environmental Declarations (MSR 1999:2 – “Guidelines for the Environmental Product Declaration”).
The study was carried out taking into consideration the disposal and recycling processes of the main materials making up a typical switchboard.
Starting from the basic list, the facility of dismantling and separating each piece, as well as recyclability of the materials was considered, and the product results as being almost completely recyclable.
Again starting from the basic list reduced to the significant components, the end of life of each of these was evaluated.
The flows of recyclable materials, materials to be recovered (or for incineration), given in the Table resulted. According to the hypotheses made, no material should end up directly in the dump.

Substance	Destination	
Aluminium waste	Recycling	
Copper waste	Recycling	
Polyurethane gaskets	Incineration	
Glass fibres	Recycling	
Glass waste	Recycling	
Paper/cardboard	Recycling	
Plastic Insulators	Recycling	
Sheet metal waste	Recycling	

Dissipated power

ArTu IP 31 switchgear

	Separate housing exposed on all sides				Separate housing wall-mounted				First or last housing exposed				First or last housing wall-mounted				Central housing exposed				Central housing wall-mounted			
	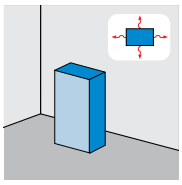				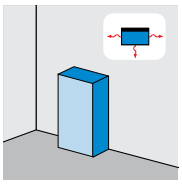				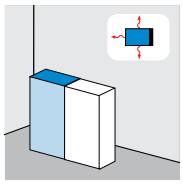				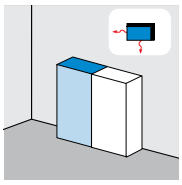				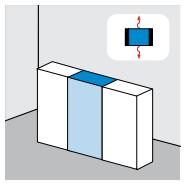				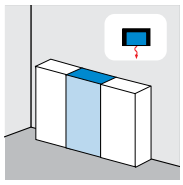			
	Max. dissipated power (W)				Max. dissipated power (W)				Max. dissipated power (W)				Max. dissipated power (W)				Max. dissipated power (W)				Max. dissipated power (W)			
Code	25 °C	30 °C	35 °C	40 °C	25 °C	30 °C	35 °C	40 °C	25 °C	30 °C	35 °C	40 °C	25 °C	30 °C	35 °C	40 °C	25 °C	30 °C	35 °C	40 °C	25 °C	30 °C	35 °C	40 °C
ArTu L																								
SL0600					99	125	150	176					95	118	143	168					91	113	137	160
SL0800					106	134	160	188					100	125	152	178					107	132	160	189
SL1000					122	152	184	216					116	143	174	204					113	141	170	201
SL1200					135	170	205	241					128	161	193	228					126	156	189	223
SL1400	174	217	265	312	155	195	237	278	168	211	255	301	145	183	221	261	164	206	250	295	140	176	213	252
SL1600	194	242	294	347	171	213	259	306	185	232	281	332	160	200	242	286	180	226	274	323	154	193	233	276
SL1800	211	264	320	378	184	231	281	331	200	251	305	360	173	217	262	309	195	244	296	350	166	208	252	298
SL2000	227	285	345	408	197	248	300	354	215	270	327	386	185	231	281	331	206	262	318	375	178	223	271	319
SL1408	246	309	374	442	206	257	311	369	237	297	360	425	197	246	299	352	229	287	348	410	190	239	288	341
SL1608	273	342	415	490	231	289	351	415	264	331	402	474	220	276	331	395	253	318	385	454	211	265	321	380
SL1808	286	359	435	513	245	308	373	441	278	349	422	498	235	295	358	422	268	337	408	482	229	287	348	411
SL2008	303	380	461	543	271	340	411	485	298	374	453	535	263	329	399	471	294	367	446	526	254	318	385	455
ArTu M																								
SM 1462	179	225	272	313	159	199	241	285	172	216	261	309	149	186	226	267	168	210	255	301	143	180	218	257
SM 1662	196	246	298	352	173	217	263	310	187	235	285	336	161	203	245	290	182	229	277	327	156	195	236	279
SM 1682	248	311	377	445	218	274	331	391	241	303	367	433	206	259	313	370	238	298	361	427	201	252	306	361
SM 1862	212	266	323	381	186	233	282	333	202	253	307	362	174	218	264	311	196	246	298	352	167	210	254	300
SM 1882	270	339	410	484	236	296	358	423	261	328	397	469	223	279	338	399	257	322	391	461	217	272	330	389
SM 2062	228	286	346	409	198	248	301	355	215	270	327	386	185	232	281	331	209	262	317	375	178	223	270	319
SM 2082	291	365	442	521	252	316	383	453	280	351	425	502	238	299	362	427	275	345	418	494	232	291	353	417
ArTu K - H=1600mm																								
SK 6025	206	257	310	367	185	229	275	325	198	247	298	351	172	215	257	305	192	242	290	342	167	207	248	283
SK 8025	260	322	391	460	230	286	345	406	252	315	380	448	216	273	325	385	250	310	373	442	212	265	320	376
ArTu K - H=1800mm																								
SK 6025	222	278	338	396	196	245	295	348	212	255	320	377	184	230	276	325	206	258	310	368	178	222	267	315
SK 8025	280	350	423	500	247	310	370	438	271	340	410	485	233	290	350	415	270	335	405	476	228	285	342	404
SK 4040	223	280	338	400	208	258	314	371	208	262	315	374	187	234	281	332	193	246	296	350	170	215	260	310
SK 6040	285	357	433	511	259	324	393	464	268	336	407	481	237	297	359	424	255	320	387	457	223	279	338	400
SK 8040	356	446	540	638	319	400	484	572	339	425	515	608	296	371	449	530	327	410	496	586	283	355	430	508
SK 4050	257	322	389	460	242	301	366	433	237	298	359	425	216	270	324	383	217	276	332	393	194	245	297	353
SK 6050	328	412	499	589	302	378	458	541	306	383	464	549	273	342	414	489	286	359	434	513	254	319	386	456
SK 8050	390	489	592	699	367	461	558	659	374	469	568	671	339	425	514	607	365	458	554	654	321	403	488	577
SK 4060	290	364	440	520	276	344	418	494	265	333	402	476	244	305	367	434	240	305	367	435	218	274	333	395
SK 6060	371	466	564	666	344	432	523	617	343	430	521	616	309	387	469	553	316	397	481	568	285	358	434	512
SK 8060	423	531	643	759	415	521	631	745	408	512	621	733	381	478	579	684	402	505	611	722	359	451	546	645

Dissipated power inside the ArTu switchgear according to the admissible overtemperature.

CONTINUED

In-depth technical information
ArTu distribution switchgear

Dissipated power

ArTu IP 31 switchgear

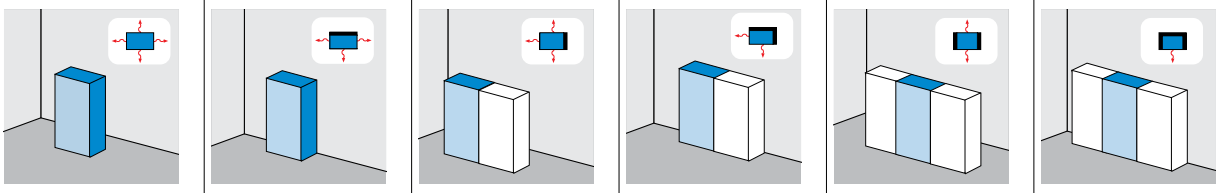

	Separate housing exposed on all sides				Separate housing wall-mounted				First or last housing exposed				First or last housing wall-mounted				Central housing exposed				Central housing wall-mounted			
	Max. dissipated power (W)				Max. dissipated power (W)				Max. dissipated power (W)				Max. dissipated power (W)				Max. dissipated power (W)				Max. dissipated power (W)			
Code	25 °C	30 °C	35 °C	40 °C	25 °C	30 °C	35 °C	40 °C	25 °C	30 °C	35 °C	40 °C	25 °C	30 °C	35 °C	40 °C	25 °C	30 °C	35 °C	40 °C	25 °C	30 °C	35 °C	40 °C
ArTu K - H=1800mm																								
SK 4080	371	461	560	668	349	440	535	622	329	410	495	588	300	377	457	539	297	370	455	536	273	343	415	491
SK 6080	428	537	651	769	426	535	648	765	407	511	619	731	388	486	589	695	384	481	583	688	352	442	535	632
SK 8080	489	614	743	877	478	599	726	857	463	581	703	830	450	564	683	807	454	570	690	815	434	544	659	778
SK 4010	445	553	672	802	419	528	642	746	395	492	594	706	360	452	548	647	356	444	546	643	328	412	498	589
SK 6010	514	644	781	923	511	642	778	918	488	613	743	877	466	583	707	834	461	577	700	826	422	530	642	758
SK 8010	587	737	892	1052	574	719	871	1028	556	697	844	996	540	677	820	968	545	684	828	978	521	653	791	934
SK1010	683	824	961	1098	670	812	968	1123	651	793	945	1102	632	776	927	1086	638	780	930	1089	612	757	913	1070
ArTu K - H=2000mm																								
SK 6025	240	298	358	424	208	260	313	370	225	282	340	402	195	245	295	346	219	275	329	388	188	234	282	334
SK 8025	306	377	457	536	262	328	395	468	290	363	440	520	248	312	377	442	285	358	429	509	242	304	365	432
SK 4040	242	304	368	435	224	268	337	399	223	280	339	399	200	251	304	359	209	260	316	377	183	230	278	329
SK 6040	304	382	463	546	277	347	420	496	287	360	436	514	253	317	384	454	273	342	415	489	237	298	360	426
SK 8040	368	462	559	660	340	427	517	610	362	454	550	650	315	395	479	565	349	437	530	625	301	378	458	541
SK 4050	277	349	422	498	261	314	393	465	254	318	385	454	203	289	350	413	234	291	354	422	208	262	316	374
SK 6050	343	431	522	616	324	406	491	580	327	410	497	586	292	384	444	524	307	384	466	549	271	340	411	486
SK 8050	402	504	611	721	381	479	580	684	390	489	592	700	359	450	546	644	381	433	579	684	341	428	518	612
SK 4060	312	393	476	561	297	360	448	530	284	356	431	508	260	327	395	467	258	322	392	466	233	293	354	419
SK 6060	382	479	581	685	370	464	562	663	367	460	557	658	331	451	503	594	340	426	516	609	304	381	462	545
SK 8060	436	546	662	781	422	530	642	758	417	524	634	749	402	505	612	722	413	519	628	742	380	477	578	682
SK 4080	393	495	598	705	378	475	577	680	356	444	538	636	306	386	469	550	319	397	480	565	291	365	442	525
SK 6080	441	554	671	792	435	546	662	781	416	522	632	746	408	512	620	732	406	509	617	728	373	468	566	669
SK 4010	472	594	718	846	454	570	692	816	427	533	646	763	367	463	563	660	383	476	576	678	349	438	530	630
SK 6010	529	665	805	950	522	655	794	937	499	626	758	895	490	614	744	878	487	611	740	874	448	562	679	803
SK 8080	512	643	778	919	494	620	751	887	480	602	729	861	461	578	701	827	466	585	709	837	451	566	685	809
SK 8010	614	772	934	1103	593	744	901	1064	576	722	875	1033	553	694	841	992	559	702	851	1004	541	679	822	971
SK1010	721	864	1022	1198	700	858	1023	1184	681	833	987	1145	659	799	947	1100	670	814	967	1123	653	792	938	1092

Dissipated power inside the ArTu switchgear according to the admissible overtemperature.

Dissipated power

ArTu IP 31 switchgear with ventilated side panels

	Separate housing exposed on all sides				Separate housing wall-mounted				First or last housing exposed				First or last housing wall-mounted			
	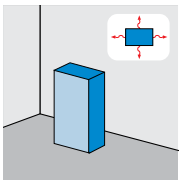				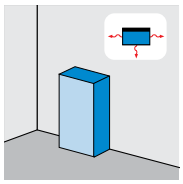				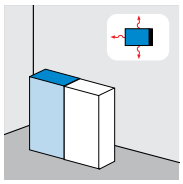				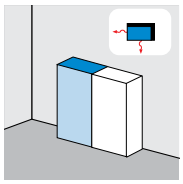			
	Max. dissipated power (W)				Max. dissipated power (W)				Max. dissipated power (W)				Max. dissipated power (W)			
Code	25 °C	30 °C	35 °C	40 °C	25 °C	30 °C	35 °C	40 °C	25 °C	30 °C	35 °C	40 °C	25 °C	30 °C	35 °C	40 °C
ArTu K - H=1800mm																
K 4060	442	570	707	852	421	544	675	813	325	420	521	628	312	402	499	601
SK 6060	515	664	824	993	486	627	778	938	396	511	634	764	368	475	589	710
SK 8060	590	761	944	1138	553	713	885	1067	461	594	737	889	426	550	682	823
SK 4080	599	773	959	1155	581	749	930	1120	409	528	654	789	393	508	630	759
SK 6080	685	885	1097	1323	660	852	1057	1274	496	640	793	956	461	595	738	889
SK 8080	772	996	1236	1489	725	936	1161	1399	551	711	882	1064	498	695	863	1040
SK 4010	799	1031	1279	1540	726	936	1163	1400	511	660	818	986	462	598	741	893
SK 6010	913	1180	1463	1764	825	1065	1321	1593	620	800	991	1195	542	700	868	1046
SK 8010	1029	1328	1648	1985	906	1170	1451	1749	689	889	1103	1330	586	818	1015	1224
SK1010	1196	1487	1778	2064	1057	1321	1612	1910	806	1011	1235	1471	685	937	1147	1373
ArTu K - H=2000mm																
SK 4060	446	574	710	855	426	550	682	822	328	425	525	632	314	406	504	605
SK 6060	529	683	847	1021	491	634	786	948	399	515	639	770	372	480	595	717
SK 8060	596	769	955	1151	565	728	904	1089	464	598	742	894	431	556	690	831
SK 4080	605	780	968	1167	584	754	935	1128	413	532	658	794	397	512	636	766
SK 6080	691	892	1107	1334	665	858	1065	1283	503	648	804	970	472	608	755	910
SK 8080	804	1037	1287	1551	738	953	1182	1425	575	742	920	1109	536	692	859	1035
SK 4010	807	1040	1291	1556	730	943	1169	1410	516	665	823	993	467	602	748	901
SK 6010	921	1189	1476	1779	831	1073	1331	1604	629	810	1005	1213	555	715	888	1071
SK 8010	1072	1383	1716	2068	923	1191	1478	1781	719	928	1150	1386	631	814	1011	1218
SK1010	1258	1548	1877	2246	1089	1373	1678	1982	850	1070	1297	1536	751	937	1138	1350

Dissipated power inside the ArTu switchgear according to the admissible overtemperature.

In-depth technical information
ArTu distribution switchgear

Dissipated power

ArTu IP 31 switchgear with 2 ventilated side panels and 2 ventilated front panels H=200mm

	Separate housing exposed on all sides				Separate housing wall-mounted				First or last housing exposed				First or last housing wall-mounted			
	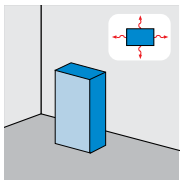				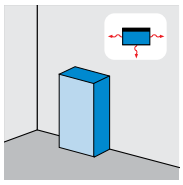				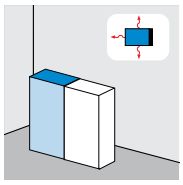				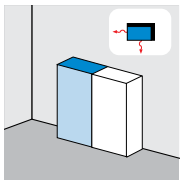			
	Max. dissipated power (W)				Max. dissipated power (W)				Max. dissipated power (W)				Max. dissipated power (W)			
Code	25 °C	30 °C	35 °C	40 °C	25 °C	30 °C	35 °C	40 °C	25 °C	30 °C	35 °C	40 °C	25 °C	30 °C	35 °C	40 °C
ArTu K - H=1800mm																
SK 6060	571	737	914	1102	541	698	866	1044	428	552	685	826	406	524	650	784
SK 8060	649	837	1038	1252	611	788	978	1179	502	648	804	969	460	593	736	887
SK 6080	737	951	1180	1422	712	919	1140	1374	552	713	884	1066	518	668	829	999
SK 8080	836	1079	1339	1613	787	1016	1261	1519	625	806	1000	1205	595	768	953	1149
SK1010	1295	1606	1926	2235	1147	1444	1750	2074	914	1146	1401	1666	818	1035	1266	1516
ArTu K - H=2000mm																
SK 6060	586	756	938	1131	546	705	874	1131	434	560	695	838	407	525	651	785
SK 8060	654	844	1047	1261	623	804	997	1202	507	654	811	978	468	604	749	903
SK 6080	741	956	1186	1429	715	923	1145	1380	560	723	897	1081	527	680	843	1016
SK 8080	861	1112	1379	1662	792	1022	1268	1528	640	826	1024	1234	596	769	955	1151
SK1010	1333	1655	1983	2301	1154	1452	1759	2086	935	1176	1434	1706	820	1036	1263	1520

Dissipated power inside the ArTu switchgear according to the admissible overtemperature.

Dissipated power

ArTu IP 41 switchgear with ventilated side panels

	Separate housing exposed on all sides				Separate housing wall-mounted				First or last housing exposed				First or last housing wall-mounted			
	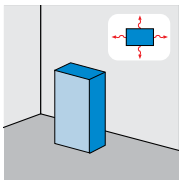				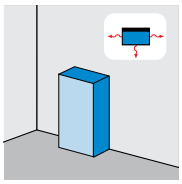				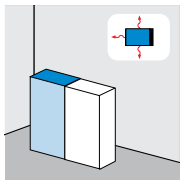				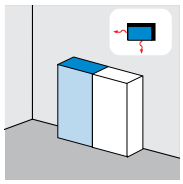			
	Max. dissipated power (W)				Max. dissipated power (W)				Max. dissipated power (W)				Max. dissipated power (W)			
Code	25 °C	30 °C	35 °C	40 °C	25 °C	30 °C	35 °C	40 °C	25 °C	30 °C	35 °C	40 °C	25 °C	30 °C	35 °C	40 °C
ArTu K - H=1800mm																
SK 4060	418	539	669	806	398	514	637	768	317	409	507	611	304	392	486	586
SK 6060	489	631	783	944	462	596	739	891	376	485	602	725	350	451	560	674
SK 8060	560	723	897	1081	525	678	841	1013	438	565	700	844	405	523	648	781
SK 6080	651	840	1042	1256	627	809	1004	1210	471	608	754	909	438	565	701	845
SK 4080	562	725	899	1084	544	703	872	1051	395	509	632	761	382	493	612	738
SK 8080	733	946	1174	1415	689	889	1103	1329	524	676	838	1010	473	661	819	988
SK 4010	749	967	1199	1445	725	937	1163	1401	494	636	790	951	449	580	720	868
SK 6010	868	1120	1389	1675	836	1079	1339	1613	589	760	943	1136	515	665	825	994
SK 8010	977	1261	1565	1887	919	1185	1471	1772	655	845	1048	1263	556	778	964	1162
SK1010	1135	1408	1688	1962	1072	1338	1634	1935	766	960	1173	1397	650	891	1089	1303
ArTu K - H=2000mm																
SK 4060	422	543	671	809	403	519	644	777	320	413	511	615	309	398	492	591
SK 6060	503	649	805	970	466	602	747	900	379	489	607	732	353	456	565	681
SK 8060	566	731	907	1093	536	692	859	1035	440	568	705	850	410	528	656	790
SK 4080	567	732	908	1094	547	706	876	1056	398	514	635	765	389	498	617	743
SK 6080	657	847	1051	1267	632	815	1011	1219	477	616	764	921	448	578	717	864
SK 8080	764	985	1222	1474	701	905	1123	1353	546	705	874	1054	510	658	816	983
SK 4010	756	976	1211	1459	729	941	1168	1408	498	643	794	956	458	586	726	874
SK 6010	876	1129	1401	1689	843	1087	1348	1625	596	770	955	1151	527	680	844	1016
SK 8010	1019	1313	1629	1965	935	1207	1497	1804	683	881	1093	1318	600	774	960	1156
SK1010	1196	1497	1782	2134	1103	1391	1699	1998	807	1016	1232	1460	714	891	1080	1281

Dissipated power inside the ArTu switchgear according to the admissible overtemperature.

In-depth technical information
ArTu distribution switchgear

Dissipated power

ArTu IP 43 switchgear

	Separate housing exposed on all sides				Separate housing wall-mounted				First or last housing exposed				First or last housing wall-mounted				Central housing exposed				Central housing wall-mounted			
	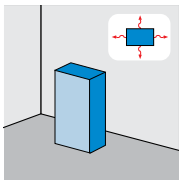				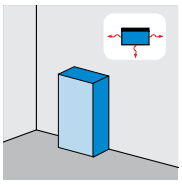				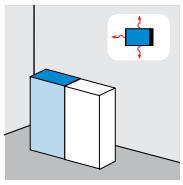				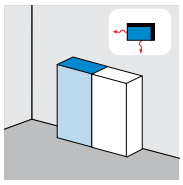				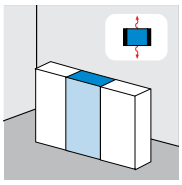				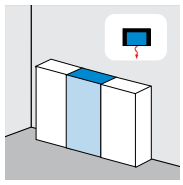			
	Max. dissipated power (W)				Max. dissipated power (W)				Max. dissipated power (W)				Max. dissipated power (W)				Max. dissipated power (W)				Max. dissipated power (W)			
Code	25 °C	30 °C	35 °C	40 °C	25 °C	30 °C	35 °C	40 °C	25 °C	30 °C	35 °C	40 °C	25 °C	30 °C	35 °C	40 °C	25 °C	30 °C	35 °C	40 °C	25 °C	30 °C	35 °C	40 °C
ArTu L																								
SL0600					90	113	137	162					86	108	131	155					82	103	125	147
SL0800					97	122	147	174					92	115	140	165					98	122	148	175
SL1000					113	141	171	202					107	134	162	191					104	131	158	187
SL1200					126	159	192	227					120	151	181	214					117	146	177	209
SL1400	158	197	241	284	141	177	215	253	153	192	232	274	132	166	201	237	149	187	227	268	127	160	194	229
SL1600	176	220	267	315	155	194	235	278	168	211	255	302	145	182	220	260	164	205	249	294	140	175	212	251
SL1800	192	240	291	344	167	210	255	301	182	228	277	327	157	197	238	281	177	222	269	318	151	189	229	271
SL2000	206	259	314	371	179	225	273	322	195	245	297	351	168	210	253	301	190	238	289	341	162	203	246	290
SL1408	224	281	340	402	187	234	283	335	215	270	327	386	179	224	272	320	208	261	316	373	173	217	262	310
SL1608	248	311	377	445	210	263	319	377	240	301	365	431	200	251	301	359	230	289	350	413	192	241	292	345
SL1808	260	326	395	466	223	280	339	401	253	317	384	453	214	268	325	384	244	306	371	438	208	261	316	374
SL2008	275	345	419	494	246	309	374	441	271	340	412	486	239	299	363	428	267	334	405	478	231	289	350	414

Dissipated power inside the ArTu switchgear according to the admissible overtemperature.

Dissipated power

ArTu IP 65 switchgear

	Separate housing exposed on all sides				Separate housing wall-mounted				First or last housing exposed				First or last housing wall-mounted				Central housing exposed				Central housing wall-mounted			
	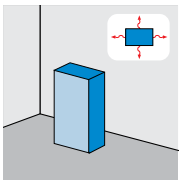				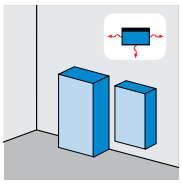				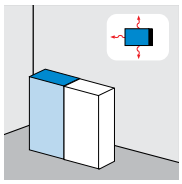				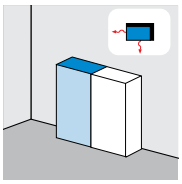				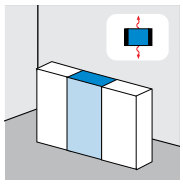				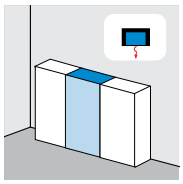			
	Max. dissipated power (W)				Max. dissipated power (W)				Max. dissipated power (W)				Max. dissipated power (W)				Max. dissipated power (W)				Max. dissipated power (W)			
Code	25 °C	30 °C	35 °C	40 °C	25 °C	30 °C	35 °C	40 °C	25 °C	30 °C	35 °C	40 °C	25 °C	30 °C	35 °C	40 °C	25 °C	30 °C	35 °C	40 °C	25 °C	30 °C	35 °C	40 °C
ArTu M																								
SM 6061					70	88	107	126																
SM 8061					71	90	108	128																
SM 8062					83	104	126	149																
SM 1062					95	119	145	171																
SM 1262					107	134	162	192																
SM 1462	159	200	242	278	141	177	215	254	153	192	233	275	132	166	201	237	149	187	227	268	127	160	194	229
SM 1662	175	219	265	313	154	193	234	276	167	209	253	299	144	180	218	258	162	204	247	291	138	174	210	248
SM 1682	221	277	336	396	194	244	295	348	215	269	326	385	184	230	279	329	212	265	321	380	179	224	272	321
SM 1862	189	237	287	339	165	207	251	297	180	225	273	322	154	194	235	277	175	219	265	313	149	186	226	267
SM 1882	240	301	365	431	210	263	319	376	232	291	353	417	198	249	301	355	229	287	348	410	193	242	294	347
SM 2062	203	254	308	364	176	221	268	316	192	240	291	344	164	206	250	295	186	233	282	334	158	199	241	284
SM 2082	259	324	393	464	224	282	341	403	249	312	379	447	212	266	322	380	245	307	372	440	207	259	314	371
ArTu K - H=1600mm																								
SK 6025	182	228	276	326	161	202	245	289	175	219	266	314	151	189	229	271	170	214	259	306	145	182	221	261
SK 8025	232	291	353	416	203	255	309	365	225	282	342	404	192	241	292	345	222	278	337	398	189	237	287	338
ArTu K - H=1800mm																								
SK 6025	199	250	303	357	175	220	266	315	190	239	289	342	164	206	249	294	185	233	282	333	158	198	240	283
SK 8025	251	315	382	451	221	277	335	396	244	307	371	439	209	262	317	375	241	302	366	432	204	256	310	365
SK 4040	193	242	293	346	179	224	271	320	178	223	270	319	160	201	243	287	165	207	251	296	146	184	222	263
SK 6040	254	318	385	455	230	289	350	413	238	299	362	428	210	264	320	378	227	285	345	407	198	249	301	356
SK 8040	316	397	481	568	284	356	431	509	302	378	458	541	263	330	400	472	291	365	442	521	252	316	383	452
SK 4050	223	284	344	406	213	267	323	381	206	258	313	370	188	236	286	338	188	236	286	338	170	213	258	305
SK 6050	292	366	443	524	268	336	407	481	271	341	413	488	242	304	368	435	279	319	386	456	226	284	343	406
SK 8050	346	435	526	622	326	409	496	586	332	417	505	596	301	378	458	540	324	407	493	581	286	358	434	413
SK 4060	260	326	395	466	247	310	375	443	235	294	357	421	217	272	329	389	212	266	322	381	194	243	295	348
SK 6060	331	415	502	593	306	384	465	549	305	383	464	548	275	344	417	493	282	353	428	505	254	319	386	456
SK 8060	377	473	572	676	369	463	561	663	363	456	552	652	339	426	516	609	358	449	544	642	320	401	486	574
SK 4080	328	411	498	588	317	398	482	569	290	364	440	520	274	344	417	492	259	325	394	465	243	304	369	435
SK 6080	381	478	579	684	379	476	577	681	362	455	551	650	345	433	524	619	341	428	519	612	314	393	477	563
SK 8080	435	546	661	781	425	533	646	763	412	517	626	739	400	502	608	718	404	507	614	725	386	484	586	692
SK 4010	386	484	586	692	373	468	567	669	341	428	518	612	322	405	491	579	305	382	464	547	286	358	434	512
SK 6010	448	562	681	805	446	560	679	801	426	535	648	765	406	509	616	728	401	504	611	720	369	462	561	662
SK 8010	512	642	778	919	500	627	760	898	485	608	736	869	471	591	715	845	475	596	722	853	454	569	689	814
SK1010	596	718	838	959	583	708	844	981	568	692	832	975	551	677	808	948	556	679	811	950	533	659	795	932

Dissipated power inside the ArTu switchgear according to the admissible overtemperature.

CONTINUED

In-depth technical information
ArTu distribution switchgear

Dissipated power

ArTu IP 43 switchgear

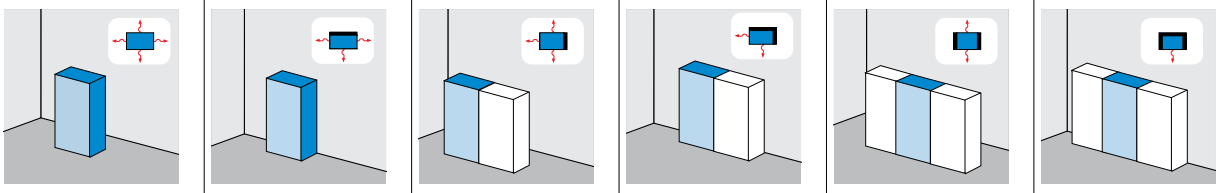

	Separate housing exposed on all sides				Separate housing wall-mounted				First or last housing exposed				First or last housing wall-mounted				Central housing exposed				Central housing wall-mounted			
	Max. dissipated power (W)				Max. dissipated power (W)				Max. dissipated power (W)				Max. dissipated power (W)				Max. dissipated power (W)				Max. dissipated power (W)			
Code	25 °C	30 °C	35 °C	40 °C	25 °C	30 °C	35 °C	40 °C	25 °C	30 °C	35 °C	40 °C	25 °C	30 °C	35 °C	40 °C	25 °C	30 °C	35 °C	40 °C	25 °C	30 °C	35 °C	40 °C
ArTu K - H=2000mm																								
SK 6025	216	270	328	387	189	237	287	338	205	257	312	368	176	221	268	316	199	250	303	358	170	213	258	305
SK 8025	273	343	415	490	239	299	362	428	265	332	402	475	225	283	343	404	261	327	396	467	220	276	334	395
SK 4040	209	262	317	375	192	241	292	345	191	240	291	343	172	216	262	309	178	223	270	319	157	197	239	282
SK 6040	271	340	412	486	246	309	374	442	255	320	388	458	225	282	342	404	243	305	369	436	211	265	321	379
SK 8040	328	411	498	588	303	380	460	543	322	404	490	578	280	352	426	503	310	389	471	557	268	337	408	481
SK 4050	244	306	371	438	228	287	347	410	221	278	337	397	202	254	307	363	202	254	308	363	182	228	277	327
SK 6050	305	383	464	548	287	361	437	516	290	364	442	521	260	342	395	466	272	342	414	459	241	302	366	432
SK 8050	358	448	543	641	339	404	515	609	346	406	527	622	319	400	485	573	339	425	515	608	303	380	461	544
SK 4060	279	351	425	501	265	333	403	476	252	316	383	452	232	292	353	417	227	285	346	408	207	260	315	372
SK 6060	340	426	517	610	329	413	500	590	326	409	496	585	295	402	448	528	302	379	459	542	271	339	411	485
SK 8060	388	486	589	695	376	472	571	675	371	466	565	667	358	449	544	643	368	462	559	660	338	424	514	607
SK 4080	354	444	537	634	341	428	519	612	314	394	478	564	295	370	448	529	278	349	423	499	258	324	393	464
SK 6080	393	493	597	705	387	486	589	695	370	464	562	664	363	455	552	651	361	453	549	648	332	416	504	595
SK 8080	456	572	693	818	440	552	668	789	427	536	649	766	410	515	624	736	415	521	631	745	401	503	610	720
SK 4010	416	522	632	746	401	504	611	720	369	464	562	664	347	435	527	622	327	411	498	587	304	381	462	546
SK 6010	462	580	702	829	455	572	693	818	435	546	661	781	427	535	649	766	425	533	646	762	391	489	593	700
SK 8010	536	673	815	962	518	649	786	928	502	631	764	901	482	606	734	866	488	613	742	876	472	592	718	847
SK1010	629	753	892	1045	611	748	892	1092	593	728	862	998	574	697	826	960	585	710	843	980	569	690	819	952

Dissipated power inside the ArTu switchgear according to the admissible overtemperature.

Handling

Handling with transpallet

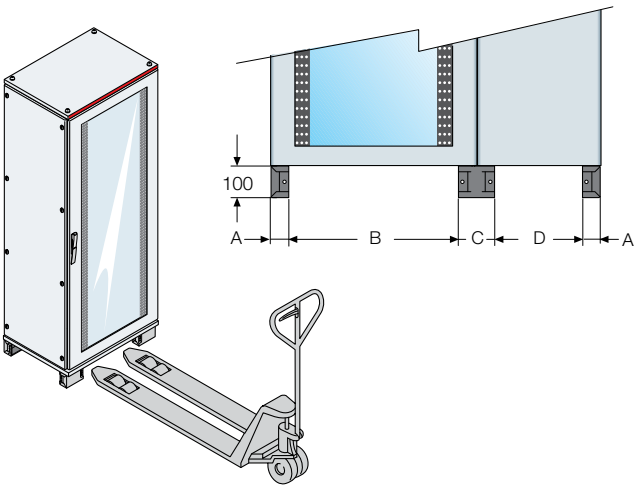

Dimensions	A (mm)	B (mm)	C (mm)	D (mm)
ArTu L				
Width 600mm	47	596	97	296
ArTu M				
Width 600mm	125,5	469	251	
Width 800mm	125,5	669	251	
ArTu K				
Width 400mm	125,5	259	251	
Width 600mm	125,5	469	251	
Width 800mm	125,5	669	251	
Width 1000mm	125.5	869	251	
Width 200mm (cable container)	125,5		251	69
Width 300mm (cable container)	125,5		251	169

For greater safety during transport using a fork-lift truck, it is advisable to anchor the switchgear to the truck:

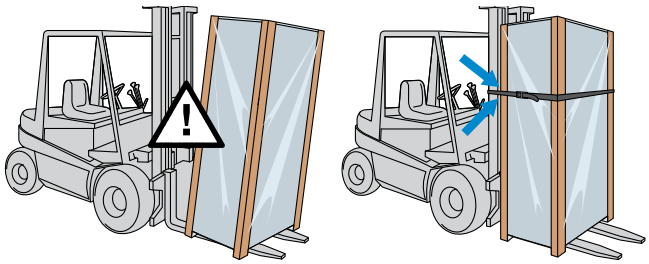

Handling ArTu K structures by means of rollers: only with ZR… reinforced plinth

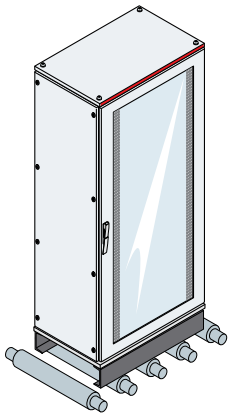

For switchgear with reduced depth, the following type of handling is recommended:

Fianco

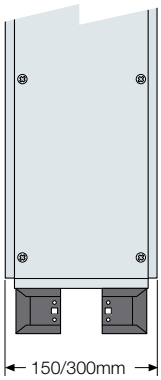

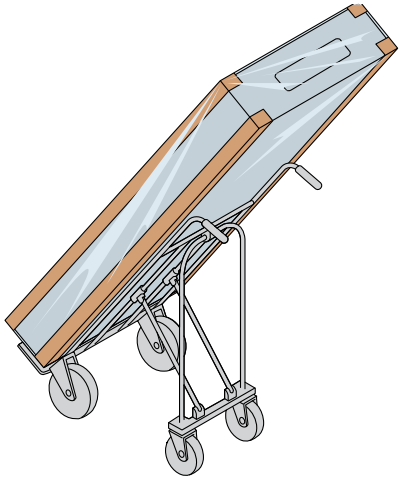

In the case of structures W=1000mm (with internal or external cable container) containing busbar systems, check the centre of gravity before handling.

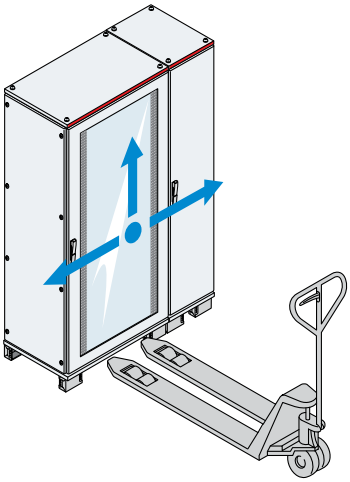

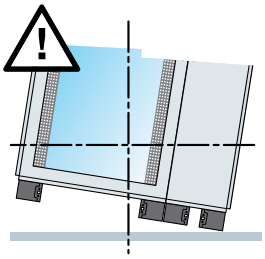

In-depth technical information
ArTu distribution switchgear

Handling

Handling with overhead travelling crane

To handle using a crane or overhead travelling crane, check the following conditions before lifting the switchgear:
- excellent state of the ropes or chains;
- the angle between the lifting ropes and the switchgear roof must be ≥ 45°;
- the maximum number of columns transported is 3;
- ArTu L maximum weight lifted as per DIN 580 (M8);
- ArTu M - K maximum weight lifted as per DIN 580 (M12) Standard.

To respect the conditions described above, a lifting beam with appropriate characteristics can be used when there are several columns side by side.

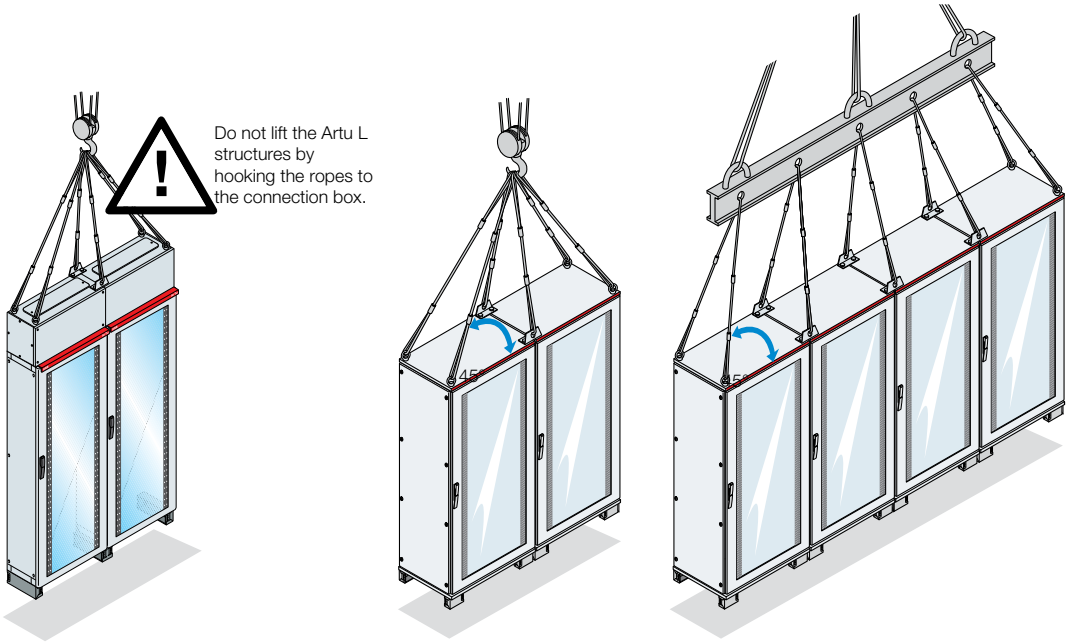

DIN 580 Standard regarding mechanical connection elements (only for lifting eyebolts)

Lifting eyebolts

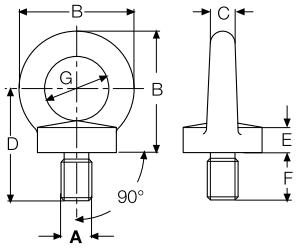

Lifting reinforcements

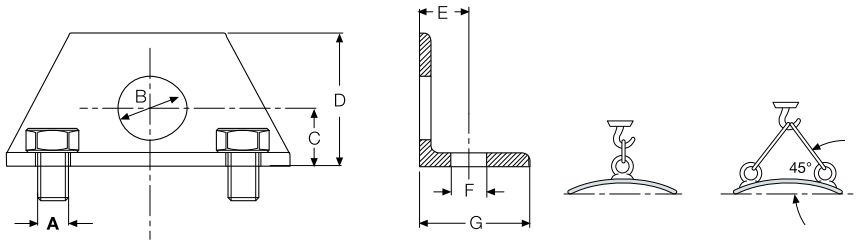

	A	B (mm)	C (mm)	D (mm)	E (mm)	F (mm)	G (mm)	Load 1 (kg)	Load 2 (kg)	Tightening (Nm)
Lifting eyebolts										
ArTu L	M8	30	8	18	6	15	20	140	95	8*
ArTu M-K	M12	54	12	28	10	22	30	340	240	8*
Lifting reinforcements										
ArTu L	M8	Ø20	30	60	28	Ø10	40	210	140	22
ArTu M-K	M12	Ø40	37	80	25	Ø14	60	510	350	40

* Close by hand without mechanical elements in order to avoid overvoltage in the stem that will reduce the capacity of the lifting eyebolts

Electrical continuity of the structure and of the fixed and mobile parts

Electrical continuity in ArTu switchgear is guaranteed automatically just with assembly of the structure without the use of dedicated accessories.

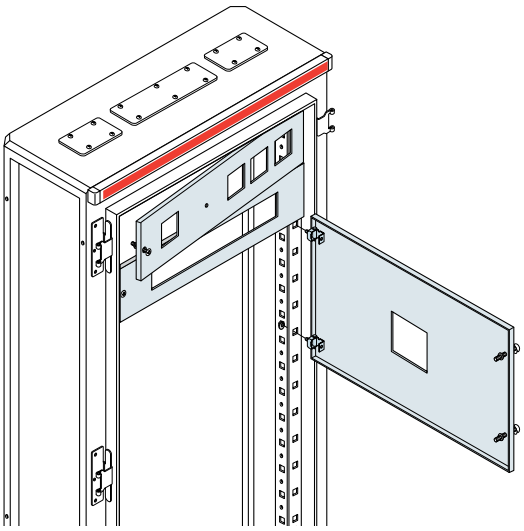

In the case of mobile parts (e.g. front panels), electrical continuity is guaranteed in the closed position by the special shape of the hinge (ABB patent) which is always supplied with the panels.

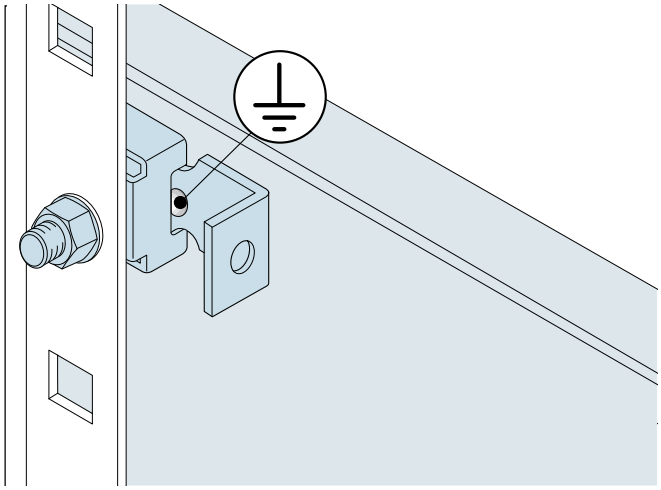

The blind door, side panels and rear panels are fitted with copper M6captive screws. Panel earthing is obtained thanks to the fixing screws.
Standard 61439-1
Part 8.4.2.2.2
Prescriptions for earth continuity for protection against the consequences of a fault within the switchgear
b) For covers, doors, closing plates and similar, the ordinary connections with metal screws and metal hinges are considered sufficient for electrical continuity so long as electrical devices that exceed the low voltage limits (ELV) are not installed on them.

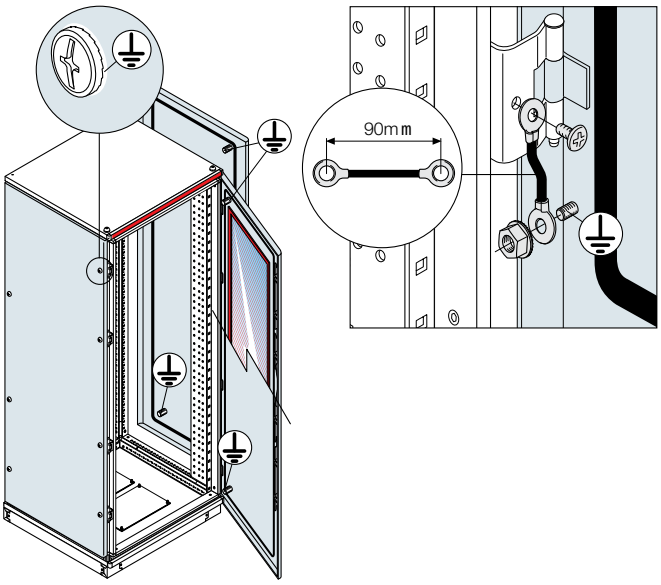

The special shape of the hinge allows connection even using a traditional copper braid.

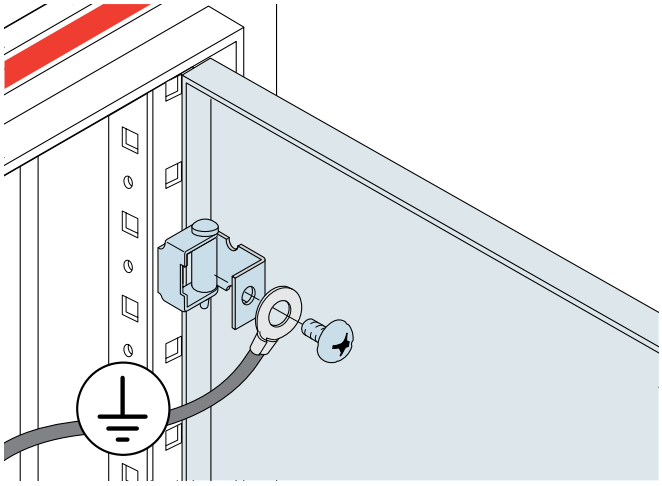

In-depth technical information
ArTu distribution switchgear

Calculation of the PE protection conductor

The IEC 60439-1 Standard indicates the methods of calculation for the cross-section of the PE protection conductor which must be suitably sized to withstand the thermal and dynamic components of the fault currents. In identifying the fixing position of the busbar, check the following conditions:
- the busbar must be connected directly to the switchgear exposed conductive parts (structure);
- the busbar must be connected in an easily accessible position.

For sizing, use the values in the table, taken from the IEC 60439-1 Standard CEI EN60439-1, IEC 61439-1-2.

S (mm²)					Sp (mm²)
		S	≤	16	S
16	<	S	≤	35	16
35	<	S	≤	400	S/2
400	<	S	≤	800	200
		S	≤	800	S/4

Wall-mounted ArTu L
Protection conductor section (25x4) 100mm²
(art. BR0400)

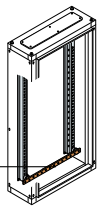

Floor-mounted ArTu L
Protection conductor section (25x4) 100mm²
(art. BR0400)

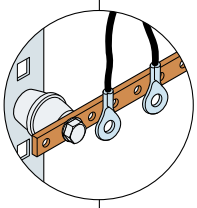

The conductors must be connected singly.

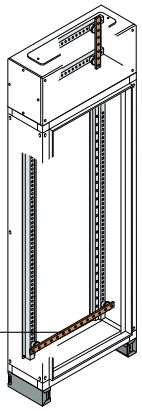

Wall-mounted ArTu M
Certified ACAE/LOVAG No. IT 11.078
with protection conductor section
(25x4)100 mm² (art. BR0400)

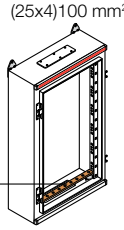

Floor-mounted ArTu M
Certified ACAE-LOVAG IT 11.076 with protection conductor section (25x4) 100mm²

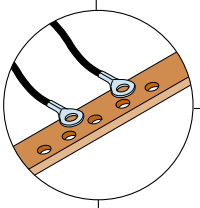

The conductors must be connected singly.

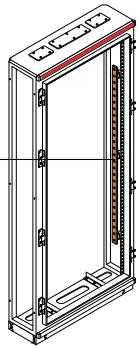

ArTu K
Certified ACAE/LOVAG No. IT 11.079 with protection conductor section (50x5) 250mm² (art. BR6305)

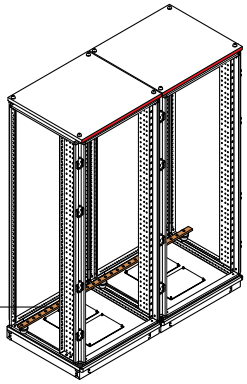

Equipotentiality

The accessible conductive parts of a device, which cannot be connected to the protection circuit by their own means of connection, must be connected to the protection circuit of the apparatus for equipotentiality of the protection by means of an equipotential conductor, whose section must be selected according to the table given below.

Rated service current I_e (A)					Minimum section of the equipotential protective conductor (mm^2)
		I_e	≤	20	S
20	<	I_e	≤	25	2,5
25	<	I_e	≤	32	4
32	<	I_e	≤	63	6
63	<	I_e			10

S = section of the phase conductor (mm^2)

PEN conductor

The section of the PEN conductors of the apparatus must be determined using the same procedure followed for the neutral conductor (N). The minimum section of a copper conductor must be 10mm^2.
The PEN conductor does not need to be insulated.
The parts of the structure must not be used as a PEN conductor.
However, the assembly tracks, made of copper or aluminium, can be used as PEN conductors.
For conductors not made of copper, the sections above are replaced with equivalent conductivity sections, which may require larger sized terminals.

In-depth technical information
ArTu distribution switchgear

IP degrees of protection

1st NUMBER: protection against solid bodies		
0		No protection
1	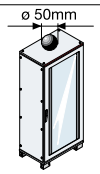	Protected against solid bodies larger than 50mm (accidental contact with hands)
2	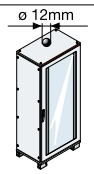	Protected against solid bodies larger than 12 mm (fingers)
3		Protected against solid bodies larger than 2.5mm (tools, wires)
4	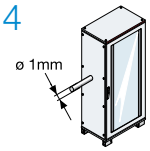	Protected against solid bodies larger than 1 mm
5		Protected against dust (no harmful deposit)
6	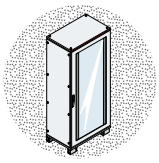	Totally protected against dust

1st number defined by the CEI EN 60529 – IEC 529 Standards

2nd NUMBER: protection against liquids		
0		No protection
1	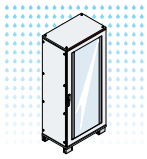	Protected against vertical fall of drops of water (condensation)
2	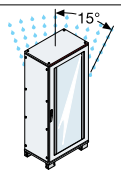	Protected against drops of water up to 15° from vertical
3	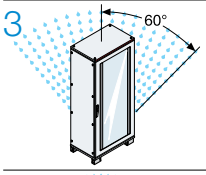	Protected against drops of water up to 60° from vertical
4	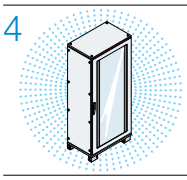	Protected against splashes of water from all directions
5	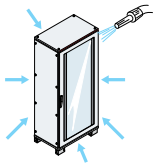	Protected against jets of water from all directions by means of a hose
6	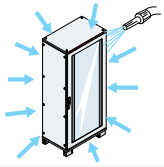	Protection against jets of water similar to sea waves
7	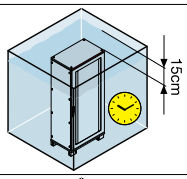	Protected against the effects of temporary immersion
8	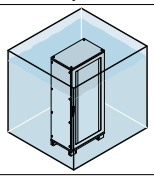	Protected against the effects of continual immersion

2nd number defined by the CEI EN 60529 – IEC 529 Standards

IP degree of protection

Protection against penetration of solid bodies

1st characteristic number	Brief description	Complete description
0	Unprotected	No particular protection
1	Protected against solid bodies larger than 50mm	No large surface of the human must be able to penetrate, for example a hand (voluntary protection is not provided) or solid bodies larger than 50mm in diameter.
2	Protected against solid bodies larger than 12mm	Fingers or similar objects of length not exceeding 80mm or solid bodies of diameter higher than 12 mm must not penetrate
3	Protected against solid bodies larger than 2.5mm	Tools, wires, etc. with diameter or thickness greater than 2.5mm or solid bodies with diameter greater than 2.5mm must not be not be able to penetrate
4	Protected against solid bodies larger than 1.0mm	Wires or plates thicker than 1.0mm or solid bodies with diameter greater than 1.0mm must not be able to penetrate
5	Protected against dust	Penetration of dust is not totally excluded, but the amount penetrating is not enough to harm correct operation of the material
6	Totally protected against dust	No penetration of dust is allowed

Protection against penetration of water

2nd characteristic number	Brief description	Complete description
0	Unprotected	No particular protection
1	Protected against vertical fall of drops of water	The drops of water which fall vertically must not cause harmful effects
2	Protected against drops of water up to 15° from vertical	The drops of water which fall vertically must not cause harmful effects when the housing is leant at any angle up to 15° in relation to its normal position
3	Protected against rain	The water which falls like rain from a direction with an angle of up to 60° to vertical must not cause harmful effects
4	Protected against the splashes of water	Water splashed over the housing from all directions must not cause harmful effects
5	Protected against jets	Water sprayed with a nozzle onto the housing from all direction must not cause harmful effects
6	Protected against waves	In the case of waves or strong jets of water, the water must not enter the housing in a harmful amount
7	Protected against the effects of temporary immersion	Water in a harmful amount must not be able to penetrate inside the housing immersed in certain pressure and duration conditions
8	Protected against the effects of continual immersion	The material is suited to remaining immersed in water in

Degrees of protection which can be obtained with ArTu switchgear

ArTu L - IP31
Without door

ArTu L - IP41
With door

ArTu M/K - IP31
Without door

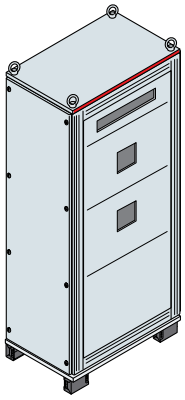

ArTu K - IP41
Without door with IP41 kit and side ventilated panels

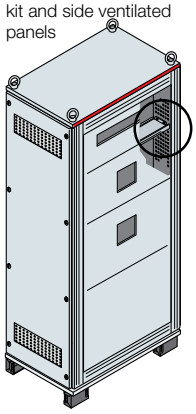

ArTu K - IP41
With door and side ventilated panels

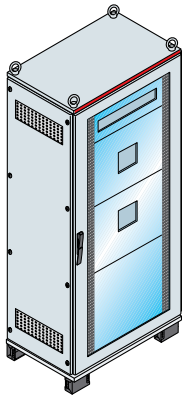

ArTu K - IP41
With door and blind panels

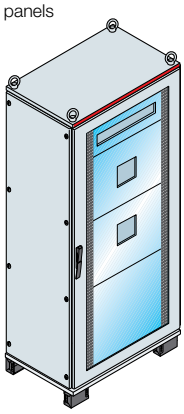

In-depth technical information
ArTu distribution switchgear

IK mechanical resistance

The IK degree is expressed in Joules in compliance with Standard IEC 62262.

IK 0

Unprotected

IK 01

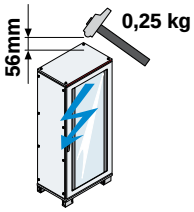

Impact energy in Joule **0,140**

IK 02

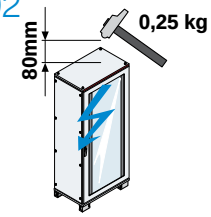

Impact energy in Joule **0,200**

IK 03

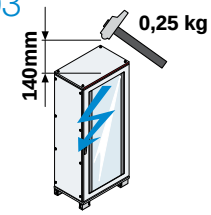

Impact energy in Joule **0,350**

IK 04

Impact energy in Joule **0,500**

IK 05

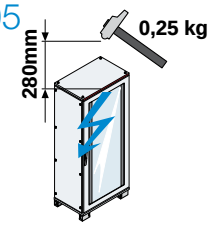

Impact energy in Joule **0,700**

IK 06

Impact energy in Joule **1,00**

IK 07

Impact energy in Joule **2,00**

IK 08

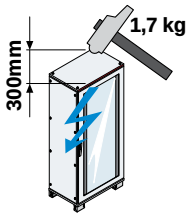

ArTu L

Impact energy in Joule **5,00**

IK 09

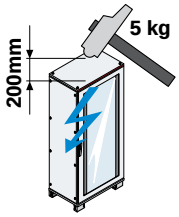

ArTu M - K

Impact energy in Joule **10,00**

IK 10

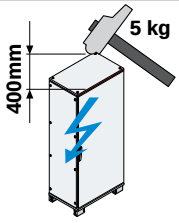

ArTu M - K

Impact energy in Joule **20,00**

Busbars with shaped section and flat bars

Mechanical and electrical characteristics

Compliance with CEI EN 60439-2/IEC 61439-1-2 Standard

The ArTu switchgear has undergone the type tests foreseen by the CEI EN 60439-2/IEC 61439-1-2 Standards in the ABB laboratories. The results of these tests guarantee the performances of the ArTu switchgear and, by using the ABB SACE metalwork structures and accessories, such as the modular and moulded-case circuit-breakers, allow the end switchgear constructor not to carry out any further type tests by following the selection criteria and the assembly instructions for the various components, and only carrying out the individual tests foreseen under the CEI EN 60439/IEC 61439-1-2 Standard. These results, which are indicated below, can be referred to for making out the declaration of conformity of the switchgear.

Technical characteristics

Components	Material
Busbars	electrolytic copper 99.9% CU-ETP
Busbar holders	self-extinguishing thermoplastic VO
Tightening screws	Mad. class 8.8

6

Busbar with shaped section

Busbar	Code	Length (mm)	IP 31	IP 41/43	IP 65	Icw (kA)	IpK (kA)	Dimensions (mm)	Section (mm^2)	Weight (Kg)
In 400	BA400	1730	630	520	400	35	74	20x20	200	4
In 800	BA800	1730	970	830	800	35	74	20x20	283	4.4
In 1250	BA1250	1730	1400	1330	1250	75	165	20x60	603	9.3
In 1600	BA1600	1730	1820	1710	1600	75	165	20x60	703	10
In 2000	BA2000	1730	2350	2200	2000	100	220	25x60	1000	14,8
Tightening torque			Screws M6 - 10N.m							
			Screws M8 - 20N.m							
			Screws M10 - 30N.m							

Flat busbar

Busbar	Code	Length (mm)	IP 31	IP 41	IP 65	Icw (kA)	IpK (kA)	Dimensions (mm)	Section (mm^2)	Weight (Kg)
In 400	BR4005	1750	530	490	400	35		32x5		2,1
In 630	BR6305	1750	772	695	630	50		50x5		3,4
In 800	BR8005	1750	951	863	800	50		63x5		4,4
In 1250	BR1250	1750	1431	1347	1250	50		100x5		2,25
In 1600	BR1600	1750	1836	1710	1600	105		100x10		14,5
In 2000	BR2000	1750	2250	2110	2000	105		120x10		18,7
In 2500	BR1600	1750	3056	2700	2500	105		100x10		29
In 3000	BR2000	1750	3500	3200	3000	105		120x10		37,4
In 3200	BR1600	1750	4018	3600	3200	105		100x10		43,5
In 4000	BR2000	1750	4460	4250	4080	105		120x10		56,1
In 5000	BR2500	1750	?	?	NO	105		160x10		?
In 6300	BR2010	1750	?	?	NO	105		200x10		?
Tightening torque			Screws M6 - 10N.m							
			Screws M8 - 20N.m							
			Screws M10 - 30N.m							

In-depth technical information
ArTu distribution switchgear

Busbars with shaped section
Busbar holders for busbars with shaped section up to 100 kA

Type		Icc (kA)	Code		Busbar 400A BA0400	800A BA0800	1250A BA1250
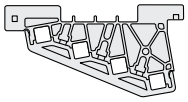	Scaled	35	PB0802	L1-L2-L3	3x BA0400	3x BA0800	
				Neutral 100%	1x BA0400	1x BA0800	
				Neutral reduced		1x BA0400	
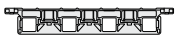	Linear	35	PB0803	L1-L2-L3	3x BA0400	3x BA0800	
				Neutral 100%	1x BA0400	1x BA0800	
				Neutral reduced		1x BA0400	
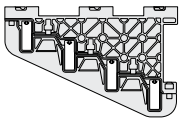	Linear	75	PB1600[1]	L1-L2-L3			3x BA1250
				Neutral 100%			1x BA1250
				Neutral reduced			
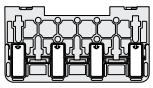	Linear	65	PB1603[1]	L1-L2-L3			3x BA1250
				Neutral 100%			1x BA1250
				Neutral reduced			
	Linear	75	PB1601[1]	L1-L2-L3			3x BA1250
				Neutral 100%			1x BA1250
				Neutral reduced			
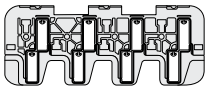	Linear	100	PB3201[1]	L1-L2-L3			
				Neutral 100%			
				Neutral reduced			

[1] It is possible to mount the 400/800A busbars with the special adapter AD1066 see example on page 5/88.

Example of use of adapter for busbars

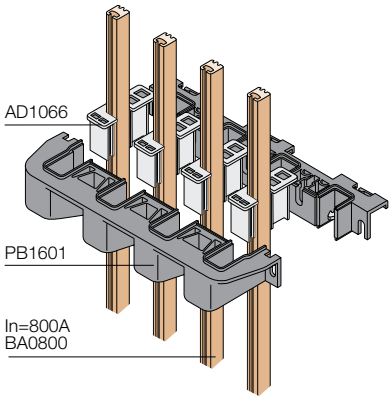

Example of use of 2 busbars per phase (3200A)

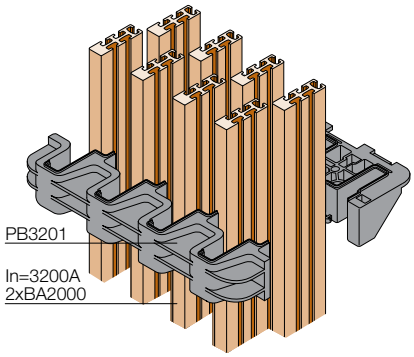

Example of use of the busbar with reduced neutral

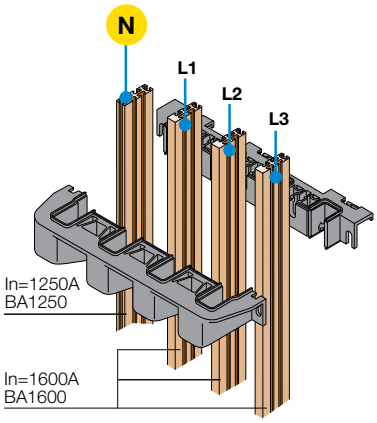

			Application					
			ArTu L		ArTu M		ArTu K	
	1600A BA1600	3200A BA2000	Structure	Cable cont. Drawer	Structure	Cable container	Structure	Cable container
				■		■		■
			■	■	■		■	
	3x BA1600							
	1x BA1600						D≥700mm	D≥700mm
	1x BA1250							
	3x BA1600							
	1x BA1600						D≥500mm	D≥500mm
	1x BA1250[							
	3x BA1600							
	1x BA1600						D≥500mm	D≥500mm
	1x BA1250							
		6x BA2000						
		2x BA2000					D≥700mm	D≥700mm
		1x BA2000						

Busbars with shaped section
Components

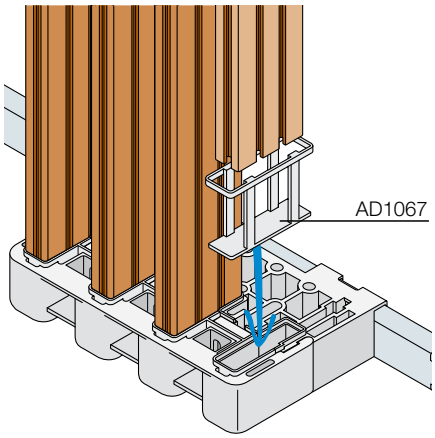

The busbar holders can be used both in intermediate and end positions, thanks to the special support.

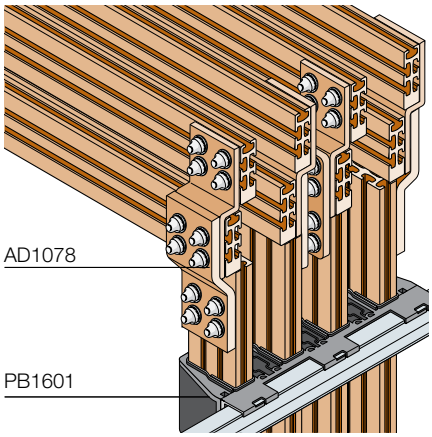

Branch between 3200A busbars with shaped section and 1250/1600A busbars with shaped section.

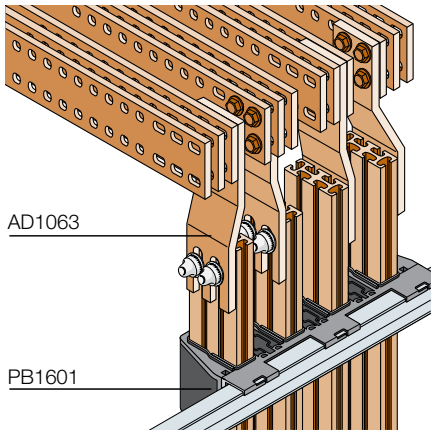

Branch between 3200A flat busbars and 1250/1600A busbars with shaped section.

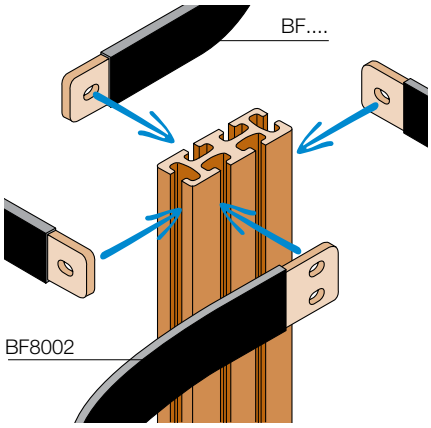

The connections can be made on each side of the busbar.

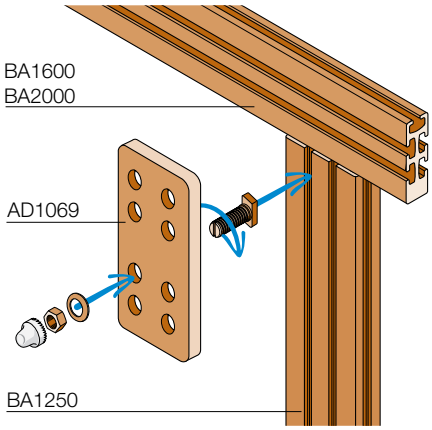

Joint for 1250-1600-2000A busbars. Example of “T” or “L” coupling.

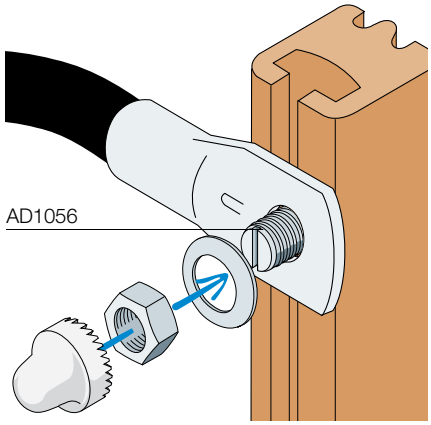

Direct branch by means of cable terminal for cable section up to 50mm^2.

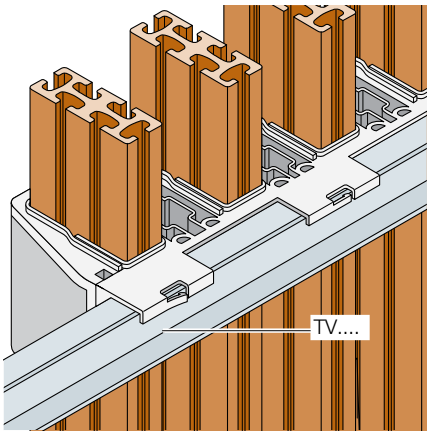

Snap-on assembly between busbar holders and assembly crosspieces.

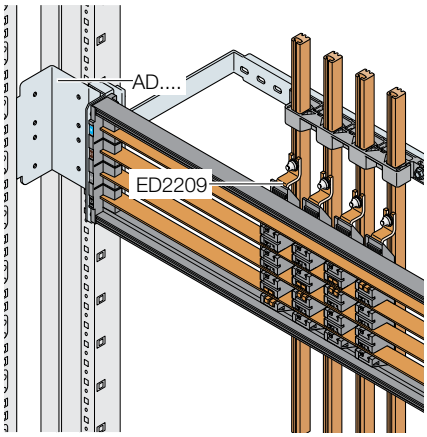

Direct connection with Unifix H system.

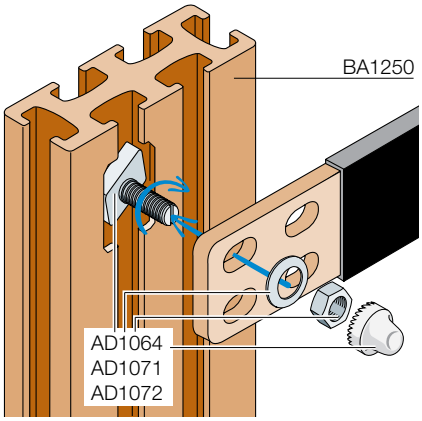

A self-locking hammer screw allows fixing between conductors in any position along the busbar, ensuring a large contact surface.

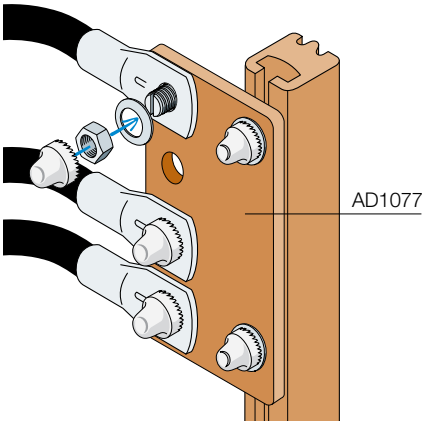

Branch by means of accessory.

Note
branches headed with cable terminal with the following dimensions:

Cable section mm²	A	B	C	D
16	9	13	6	32
25	10,5	13	7	35
35	14	17	9	41
70	15	20	10	42

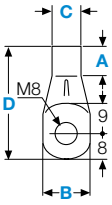

Flat busbars

Busbar holders for flat busbars up to 32 kA

					Busbars			Application	
Type		Icc (kA)	Code		250A BR0250	400A BR0400	630A BR0630	Structure	Cable cont. Box
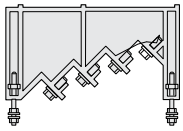	Scaled	23	BP0634	L1-L2-L3	3xBR0250	3xBR0400	3xBR0630		■
				Neutral 100%	1xBR0250	1xBR0400	1xBR0630		
	Linear	32	BP0630	L1-L2-L3	3xBR0250	3xBR0400	3xBR0630	■	■
				Neutral 100%	1xBR0250	1xBR0400	1xBR0630		

6

Busbar holders for flat busbars up to 105 kA

					Busbars					Application
Type		Icc (kA)	Code		400A BR4005	630A BR6305	800A BR8005	1250A BR1250	1600A BR1600	ArTu K structure/cable cont.
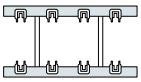	Linear	50	BP1250	L1-L2-L3	3xBR4005	3xBR6305	3xBR8005	3xBR1250		D≥500
				Neutral 100%	1xBR4005	1xBR6305	1xBR8005	1xBR1250		
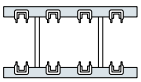	Linear	75	BP1600	L1-L2-L3					3xBR1600	D≥500
				Neutral 100%					1xBR1600	
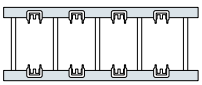	Linear	105	BP2500	L1-L2-L3					6xBR1600	D≥700
				Neutral 100%					2xBR1600	
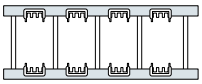	Linear	105	BP3200	L1-L2-L3					9xBR1600	D≥700
				Neutral 100%					3xBR1600	
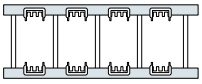	Linear	105	BP3200	L1-L2-L3					9xBR2000	D≥900
				Neutral 100%					3xBR2000	
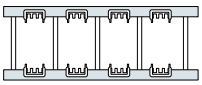	Linear	105	BP1621	L1-L2-L3					9xBR2500	D≥900
				Neutral 100%					3xBR2500	
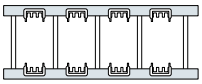	Linear	105	BP1622	L1-L2-L3					9xBR2010	D≥900
				Neutral 100%					3xBR2010	

Flat busbars
Components

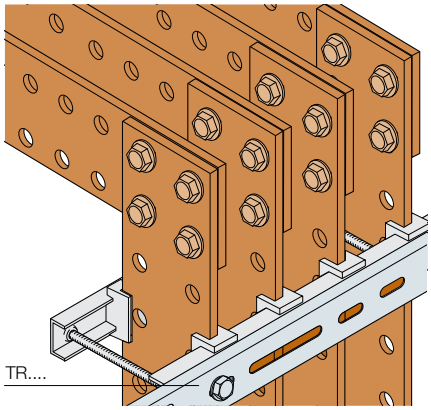

The 25mm pitch drilling allows branching between flat busbars at any point..

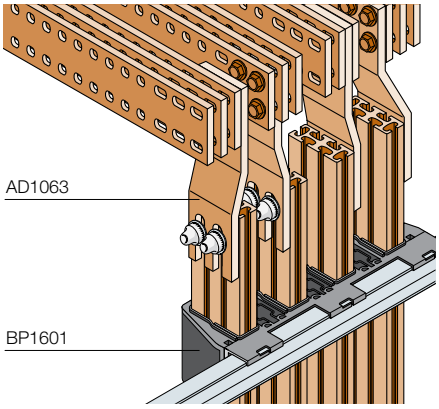

Branch between pre-drilled 3200A flat busbars and 1250/1600A busbars with shaped section (only with PB1601).

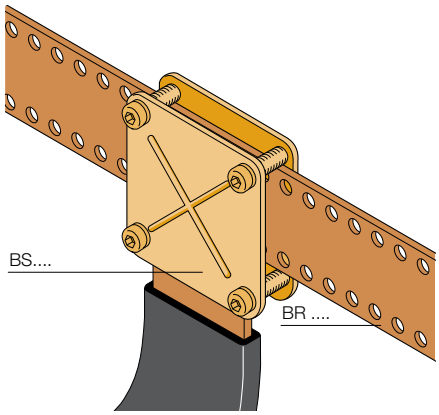

Branch between flat busbar and flexible busbar by means of tightening plate.

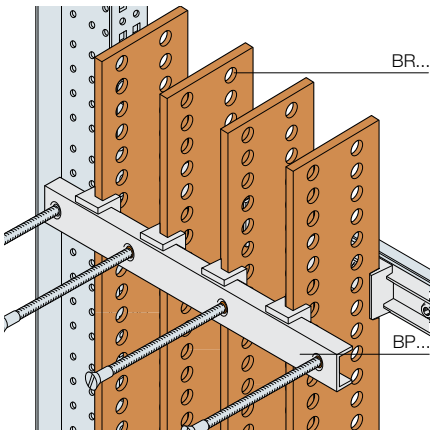

Busbar holder for flat busbars (one busbar per phase).

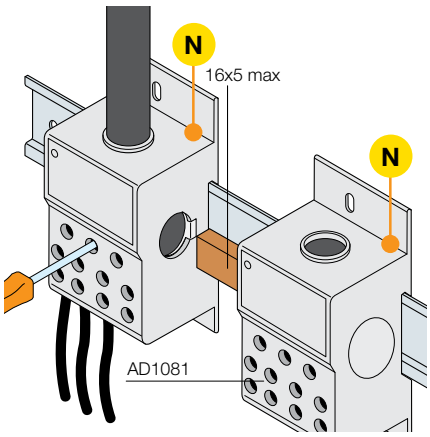

Single-phase divider with possibility of connection, which can be mounted on DIN rail.

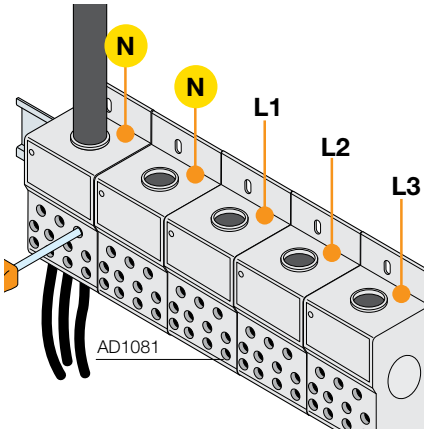

Single-phase dividers up to 400A, which can be mounted on DIN rail.

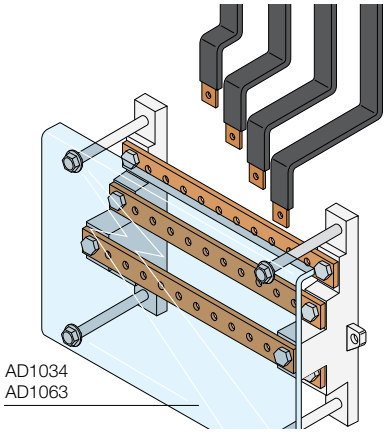

Four-pole 250A divider.

Examples of connections - Unifix H

Unifix H frame with 400A 24 and 36 module busbars

Busbar power supply from the top by means of 4P feeder module placed laterally

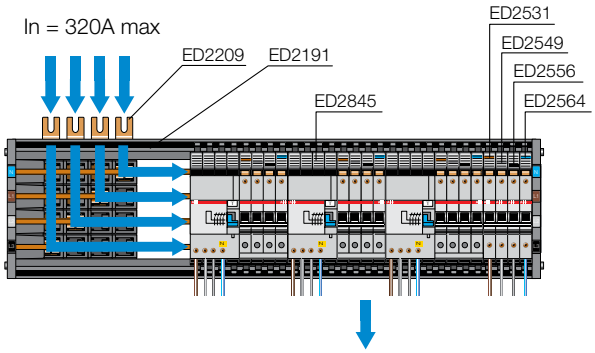

Busbar power supply from the top by means of main row circuitbreaker

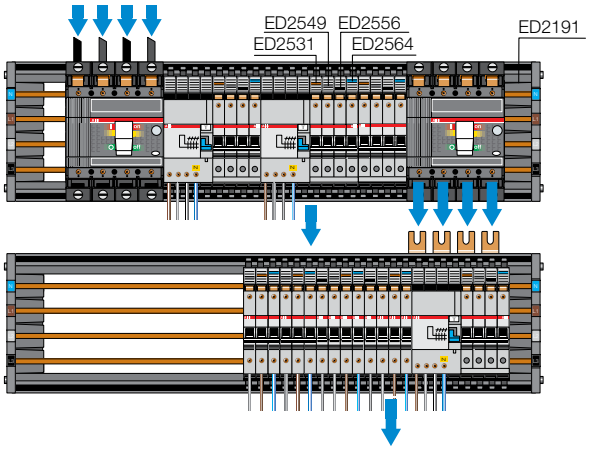

Busbar power supply from the bottom by means of 4P feeder module placed laterally

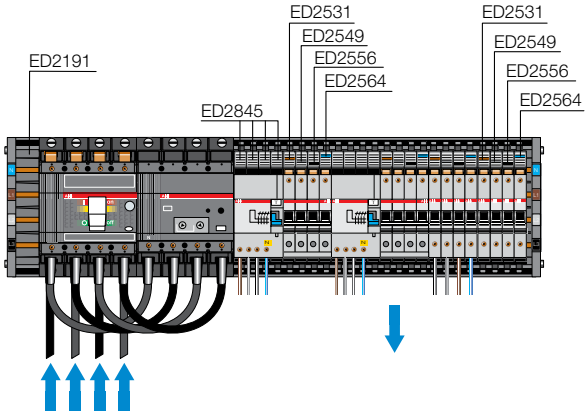

Busbar power supply from the bottom by means of main row circuit-breaker

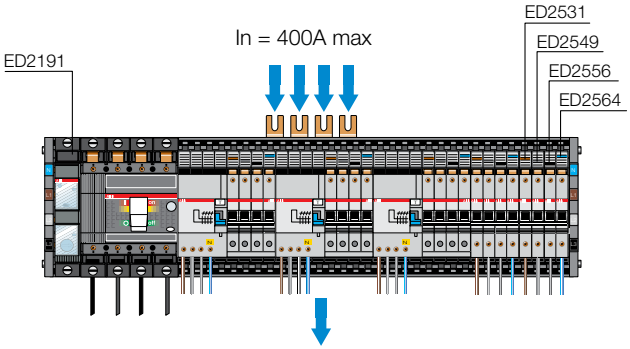

Busbar power supply from the top by means of 4P feeder module placed centrally

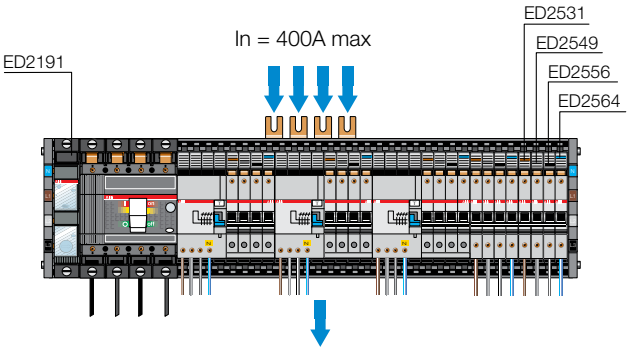

Covers for IP 20 degree of protection

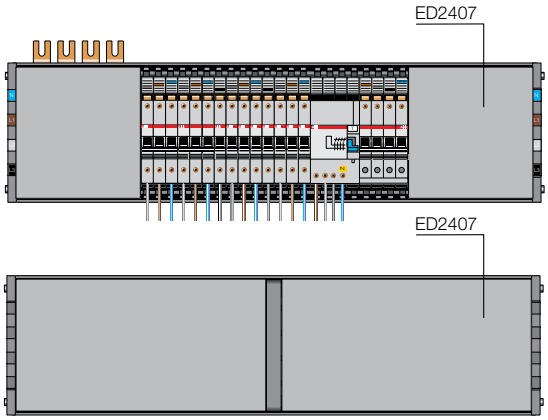

Examples of connections - Unifix L

Unifix L frame with 100A 12/18/24 module busbars

Two different single-phase circuits on a single 24 module DIN rail

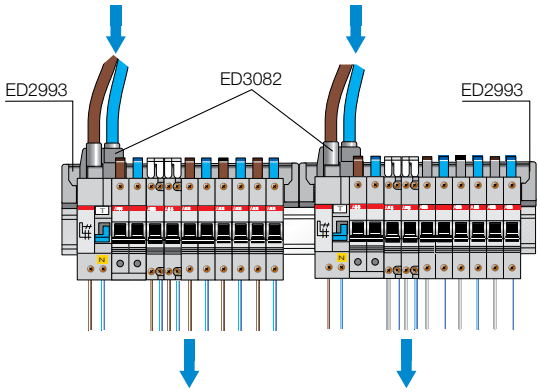

Busbar power supply by means of power supply terminals placed centrally

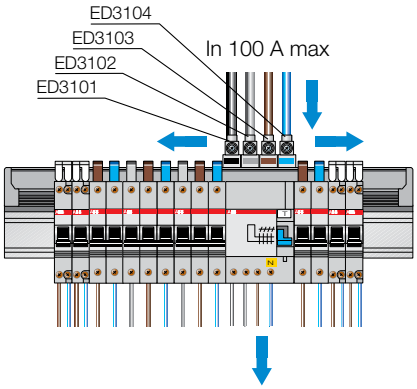

Example of main and shunted power supply

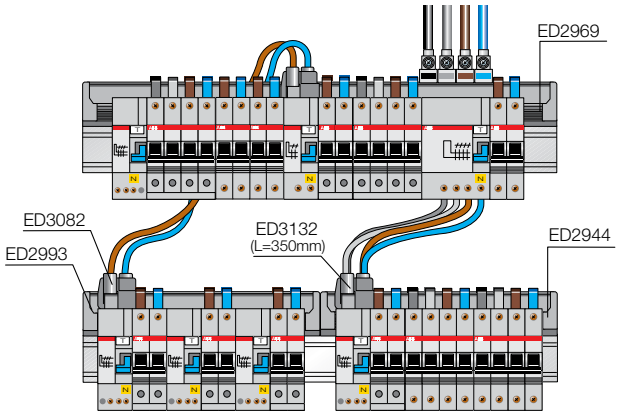

Busbar power supply by means of power supply terminals placed laterally

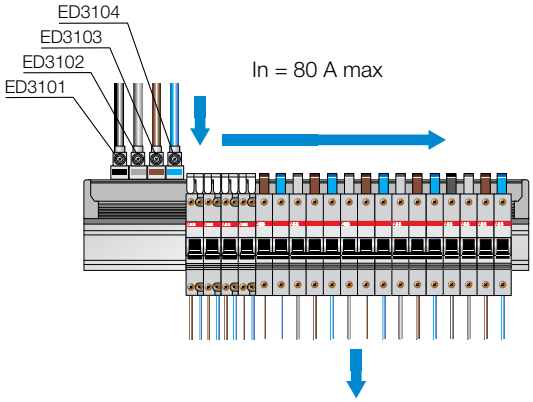

Busbar power supply by means of cable terminal placed under the head of the circuit-breaker terminal and branch with parallel module

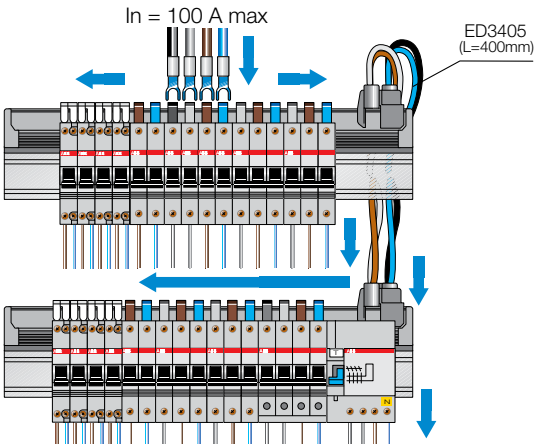

Direct busbar power supply by means of feeder module (supplied without cables) and branch by means of feeder module

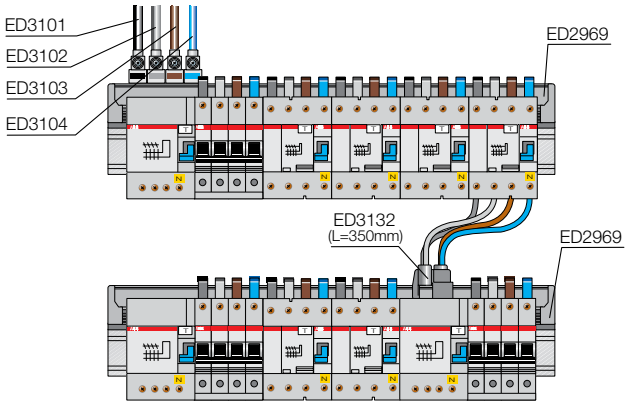

Examples of ArTu segregation

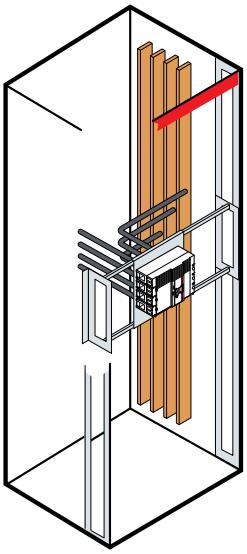

Form 1
(no internal segregation)

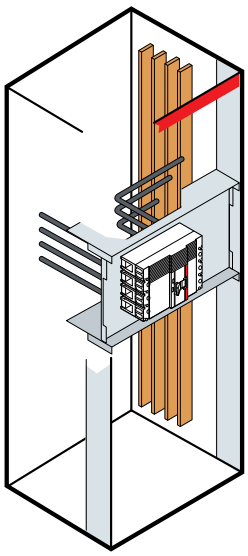

Form 2
(segregation of the busbars from the functional units)

Form 2a

Terminals not separated from the busbar

Form 2b

Terminals separated from the busbar

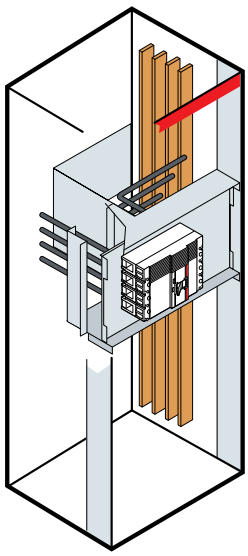

Form 3
(separation of the busbars from the functional units + separation of the functional units from each other)

Form 3a

Terminals not separated from the busbar

Form 3b

Terminals separated from the busbar

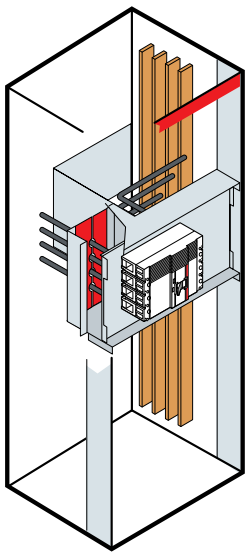

Form 4
(separation of the busbars from the functional units + separation of the functional units from each other + separation of the terminals from each other)

Form 4a

Terminals in the same the associated functional unit

Form 4b

Terminas not in the same the associated functional unit

Standardised RAL colours (on request)

On request, colours other than the standard RAL 7035 orange peel one are available, using the same painting cycle (for other types of colours or paints, please contact ABB).

Beige

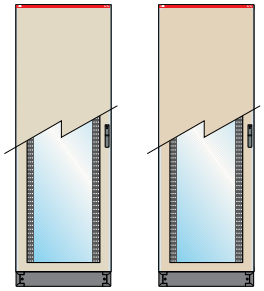

RAL 1013		RAL 1015	
Smooth	Orange p.	Smooth	Orange p.
	●		●

Ivory

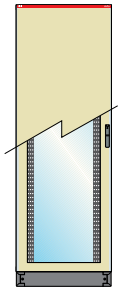

RAL 1014	
Smooth	Orange p.
●	

Green

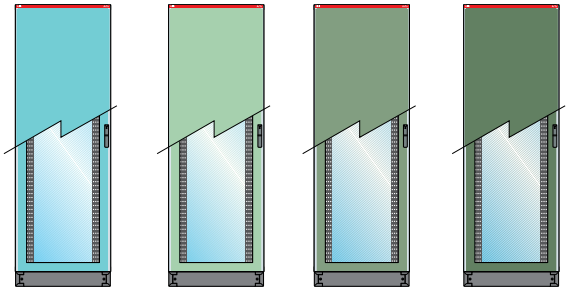

RAL 6027		RAL 6019		RAL 6021		RAL 6011	
Smooth	Orange p.	Smooth	Orange p.	Smooth	Orange p.	Smooth	Orange p.
●		●	●		●	●	●

Orange

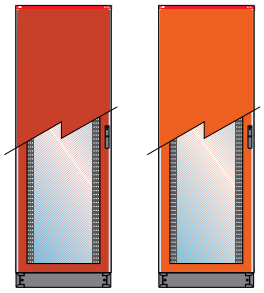

RAL 2002		RAL 2004	
Smooth	Orange p.	Smooth	Orange p.
	●	●	

Red

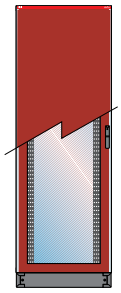

RAL 3000	
Smooth	Orange p.
●	

Blue

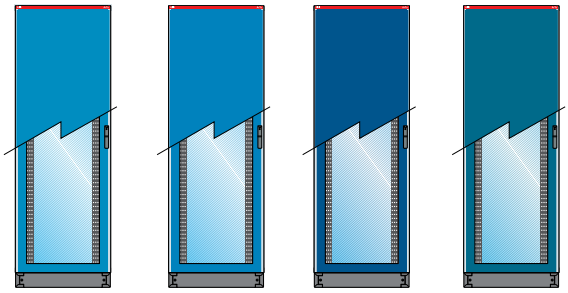

RAL 5012		RAL 5015		RAL 5010		RAL 5009	
Smooth	Orange p.	Smooth	Orange p.	Smooth	Orange p.	Smooth	Orange p.
●	●	●	●	●	●		●

White

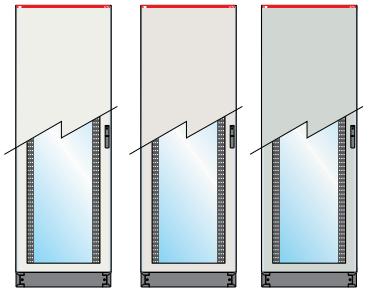

RAL 9010		RAL 9001		RAL 9002	
Smooth	Orange p.	Smooth	Orange p.	Smooth	Orange p.
●	●	●		●	●

Black

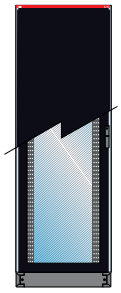

RAL 9005	
Smooth	Orange p.
	●

Grey

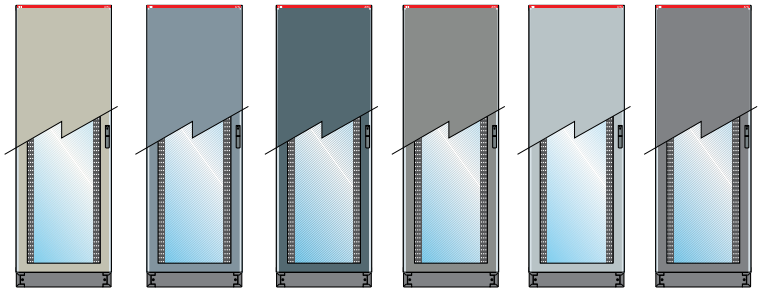

RAL 7032		RAL 7001		RAL 7031		RAL 7030		RAL 7035		RAL 7012	
Smooth	Orange p.	Smooth	Orange p.	Smooth	Orange p.	Smooth	Orange p.	Smooth	Orange p.	Smooth	Orange p.
	●		●	●		●	●	●			●

Overall dimensions

Gemini	7/2
ArTu L Structures	7/6
ArTu M	7/10
ArTu K	7/14
ArTu L - M - K - Kit for apparatus	7/20
ArTu L - M - K - Distribution systems	7/23
ArTu L - M - K - Accessories	8/26

Overall dimensions
Gemini

Structures

Front view

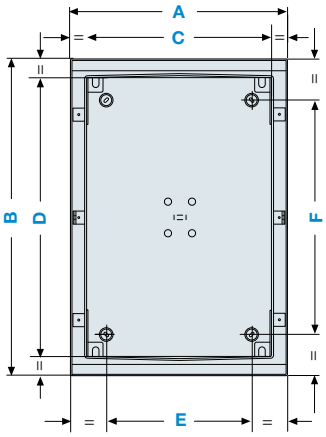

Side view

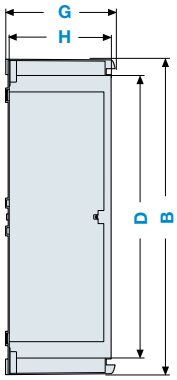

Top view

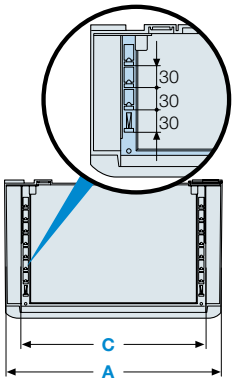

Installation with brackets

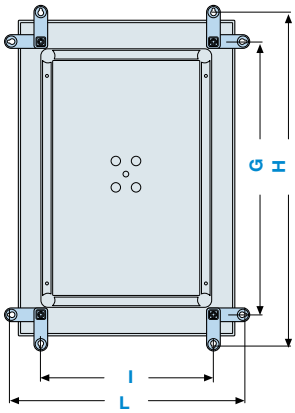

Size	Code	A	B	C	D	E	F	G	H	I	L
1	1SL0201A00-1SL0211A00-1SL0221A00	335	400	250	300	150	180	263	463	195	395
2	1SL0202A00-1SL0212A00-1SL0222A00	460	550	375	450	250	270	412	612	320	520
3	1SL0203A00-1SL0213A00-1SL0223A00	460	700	375	600	270	475	560	760	320	520
4	1SL0204A00-1SL0214A00-1SL0224A00	590	700	500	600	286	385	562	762	445	645
5	1SL0205A00-1SL0215A00-1SL0225A00	590	855	500	750	390	558	713	913	445	645
6	1SL0206A00-1SL0216A00-1SL0226A00	840	1005	750	900	640	706	863	1063	695	895

7

Uprights

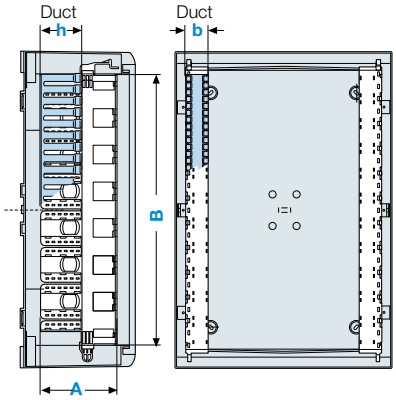

Size	Code	A	B	Duct b	Duct h
1	1SL0283A00	132	300	18	46
2	1SL0284A00	152	450	27	46
3	1SL0285A00	152	600	27	46
4	1SL0285A00	152	600	27	46
5	1SL0286A00	152	750	36	46
6	1SL0287A00	152	900	55	46

Front opaque and transparent doors

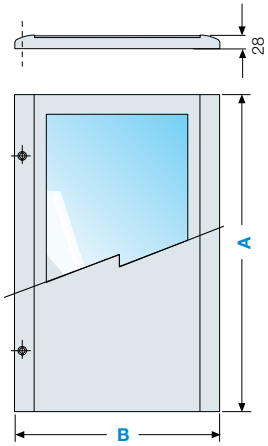

Size	Code	A	B
1	1SL0241A00-1SL0231A00	349	325
2	1SL0242A00-1SL0232A00	499	450
3	1SL0243A00-1SL0233A00	649	450
4	1SL0244A00-1SL0234A00	649	575
5	1SL0245A00-1SL0235A00	799	575
6	1SL0246A00-1SL0236A00	949	825

> The measurements are in millimetres

Base plates

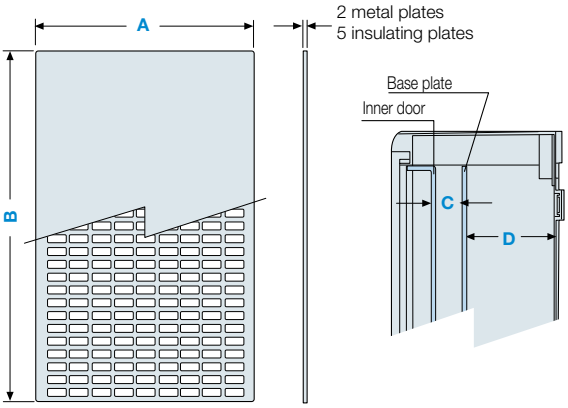

Size	Code	A	B	C	D
1	1SL0259A00-1SL0275A00-1SL0267A00	235	285	33.5÷110	16.3÷91
2	1SL0260A00-1SL0276A00-1SL0268A00	360	435	33.5÷139	36.4÷140
3	1SL0261A00-1SL0277A00-1SL0269A00	360	585	33.5÷139	36.4÷140
4	1SL0262A00-1SL0278A00-1SL0270A00	485	585	33.5÷139	36.4÷140
5	1SL0263A00-1SL0279A00-1SL0271A00	485	735	33.5÷228	47÷244
6	1SL0264A00-1SL0280A00-1SL0272A00	735	885	33.5÷228	47÷244

Inner doors

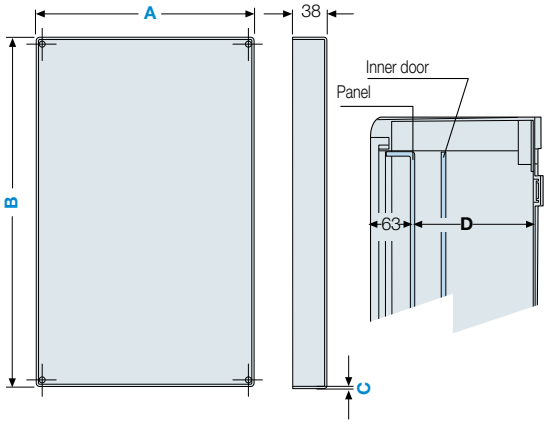

Size	Code	A	B	C	D
1	1SL0251A00	250	300	3	128
2	1SL0252A00	375	450	4	177
3	1SL0253A00	375	600	4	177
4	1SL0254A00	500	600	4	177
5	1SL0255A00	500	750	5	277
6	1SL0256A00	750	900	5	277

7

DIN rail

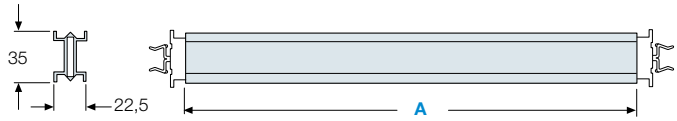

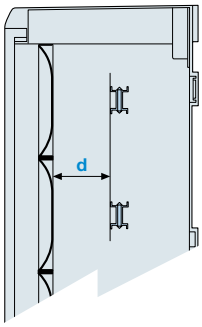

Size	Code	A	d = pos. 1	d = pos. 2	d = pos. 3	d = pos. 4	d = pos. 5	d = pos. 6
1	1SL0290A00	210	51	63,5	76	88,5	-	-
2	1SL0291A00	318	51	63,5	76	88,5	101	113,5
3	1SL0291A00	318	51	63,5	76	88,5	101	113,5
4	1SL0292A00	443	51	63,5	76	88,5	101	113,5
5	1SL0292A00	443	51	63,5	76	88,5	101	113,5
6	1SL0293A00	663	51	63,5	76	88,5	101	113,5

The distances of the DIN rail from the panel depend on the depth at which the DIN rail is regulated by using fixing devices.

Panels for modular apparatus mounted on DIN rail

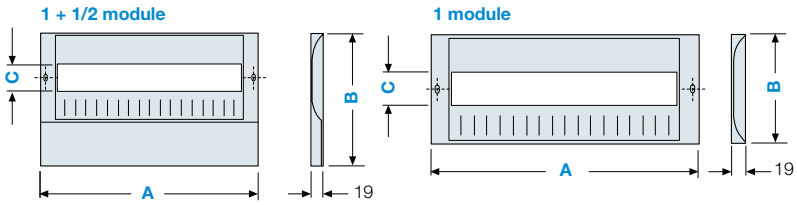

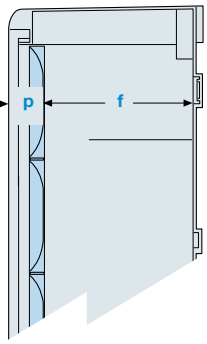

Size	Code	1 mod. A	1 mod. B	1+1/2 mod. A	1+1/2 mod. B	C	DIN modules	p	f
1	1SL0307A00	250	150	-	-	46	12	44	145
2	1SL0308A00-1SL0313A00	375	150	375	225	46	18	44	197
3	1SL0308A00-1SL0313A00	375	150	375	225	46	18	44	197
4	1SL0309A00-1SL0314A00	500	150	500	225	46	24	44	197
5	1SL0309A00-1SL0314A00	500	150	500	225	46	24	44	297
6	1SL0310A00-1SL0315A00	750	150	750	225	46	36	44	297

> The measurements are in millimetres

Overall dimensions
Gemini

Blank panels

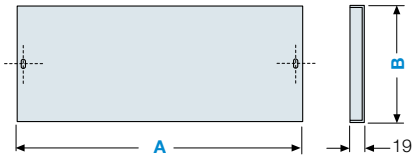

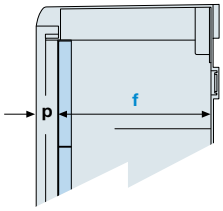

Size	Code	1/2 mod. A	1/2 mod. B	1 mod. A	1 mod. B	2 mod. A	2 mod. B	p	f
1	1SL0318A00-1SL0324A00-1SL0330A00	250	75	250	150	250	300	26,5	162
2	1SL0319A00-1SL0325A00-1SL0331A00	375	75	375	150	375	300	26,5	214
3	1SL0319A00-1SL0325A00-1SL0331A00	375	75	375	150	375	300	26,5	214
4	1SL0320A00-1SL0326A00-1SL0332A00	500	75	500	150	500	300	26,5	214
5	1SL0320A00-1SL0326A00-1SL0232A00	500	75	500	150	500	300	26,5	314
6	1SL0321A00-1SL0327A00-1SL0233A00	750	75	750	150	750	300	26,5	314

Modular plates

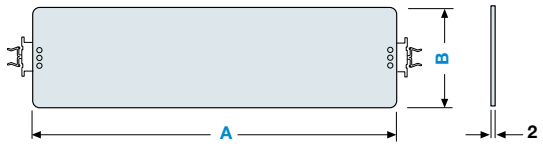

Size	Code	1 mod. A	1 mod. B	2 mod. A	2 mod. B
1	1SL0296A00	210	130		
2	1SL0297A00-1SL0302A00	318	130	318	280
3	1SL0297A00-1SL0302A00	318	130	318	280
4	1SL0298A00-1SL0303A00	443	130	443	280
5	1SL0298A00-1SL0303A00	443	130	443	280
6	1SL0299A00-1SL0304A00	663	130	663	280

Mounting distances between front panel and plate

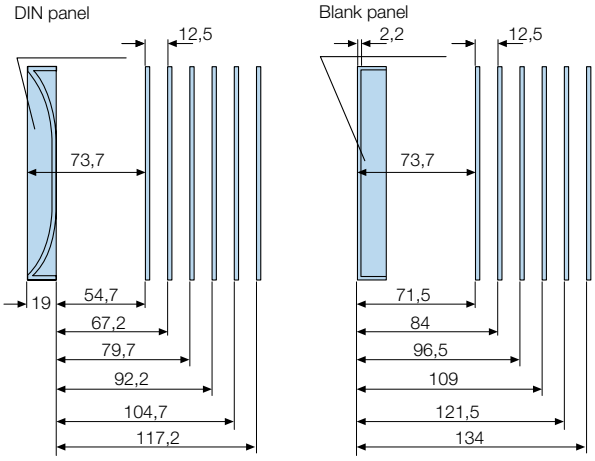

Kit for Tmax

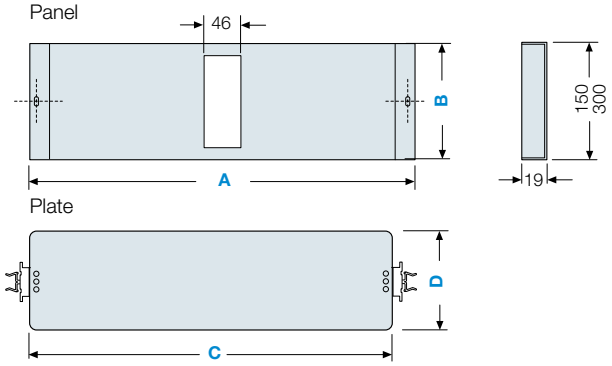

Size	Code	Panel 1 mod. A	Panel 1 mod. B	Panel 2 mod. A	Panel 2 mod. B
2	1SL0336A00-1SL0370A00	375	150	375	300
3	1SL0336A00-1SL0370A00	375	150	375	300
4	1SL0337A00-1SL0371A00	500	150	500	300
5	1SL0337A00-1SL0371A00	500	150	500	300
6	1SL0338A00-1SL0372A00	750	150	750	300

Size	Code	Plate 1 mod. C	Plate 1 mod. D	Plate 2 mod. C	Plate 2 mod. D
1	1SL0296A00	210	130		
2	1SL0297A00-1SL0302A00	318	130	318	280
3	1SL0297A00-1SL0302A00	318	130	318	280
4	1SL0298A00-1SL0303A00	443	130	443	280
5	1SL0298A00-1SL0303A00	443	130	443	280
6	1SL0299A00-1SL0304A00	663	130	663	280

> The measurements are in millimetres

Wiring kit

Duct 25x60 mm

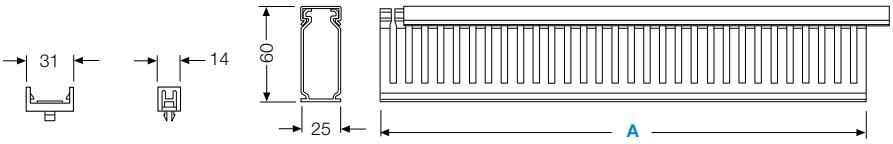

Duct 40x60 mm

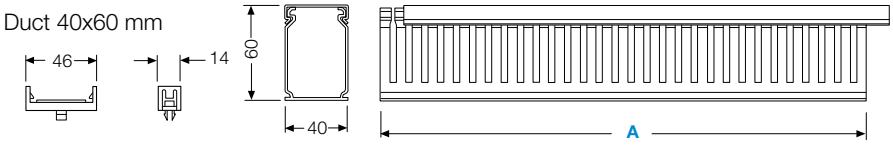

Size	A
1	210
2	318
3	318
4	443
5	443
6	663

Ventilation kit

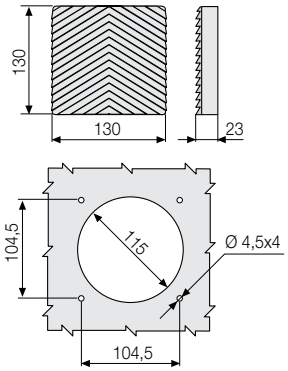

Anti-condensation kit

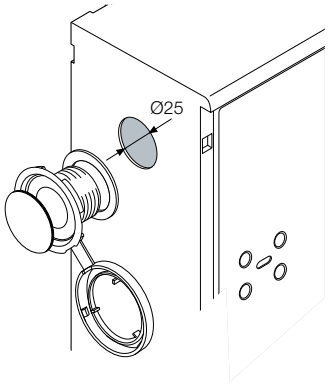

Pedestal

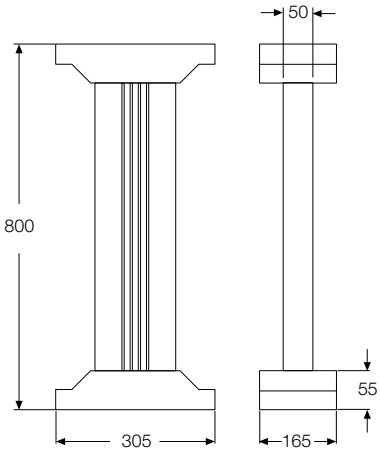

Pole installation kit

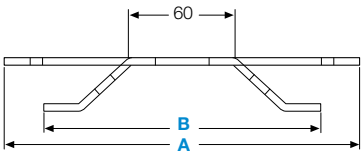

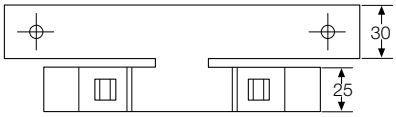

Size	A	B
1	232	206
2-3	358	332
4-5	483	457
6	733	707

> The measurements are in millimetres

Overall dimensions
ArTu L structures

Wall-mounted ArTu L

Front structure

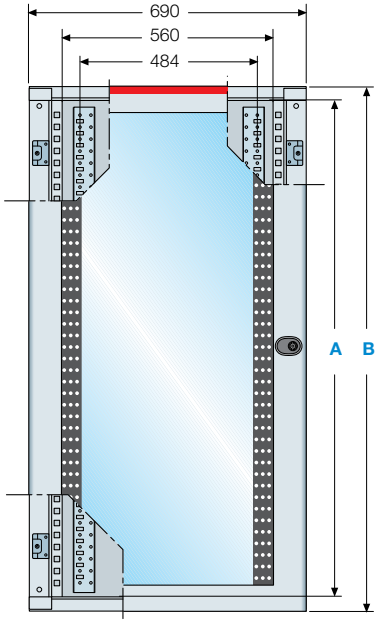

Front of cable container

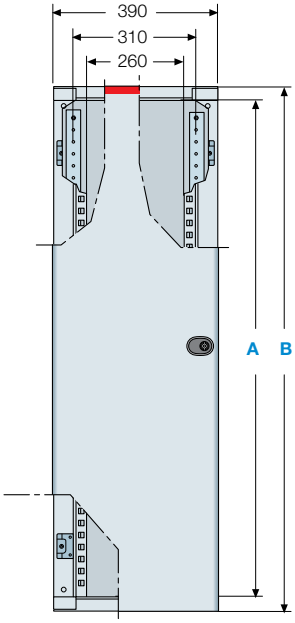

Side

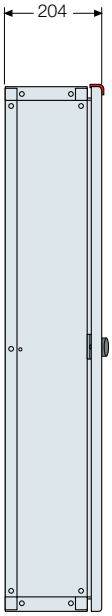

Code	A	B
Structure		
SL0600	600	650
SL0800	800	850
SL1000	1000	1050
SL1200	1200	1250
Cable container		
VC0600	600	650
VC0800	800	850
VC1000	1000	1050
VC1200	1200	1250

Base of structure

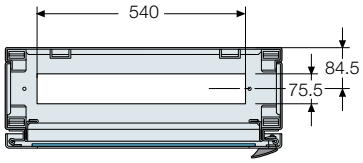

Base of cable container

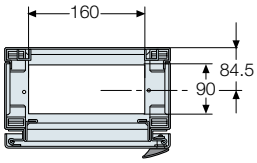

> The measurements are in millimetres

Wall-mounted ArTu L
Fixing to wall

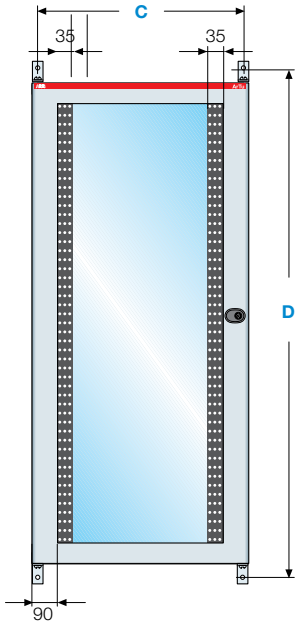

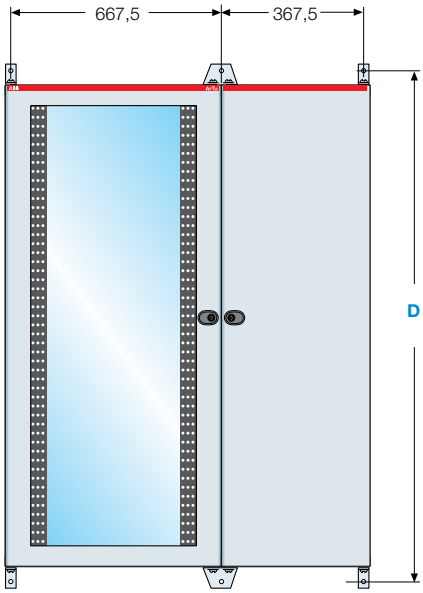

Code	C	D
Structure		
SL0600	645	700
SL0800	645	900
SL1000	645	1100
SL1200	645	1300
Cable container		
VC0600	345	700
VC0800	345	900
VC1000	345	1100
VC1400	345	1300

7

Useful space inside wall-mounted switchgear

Structure

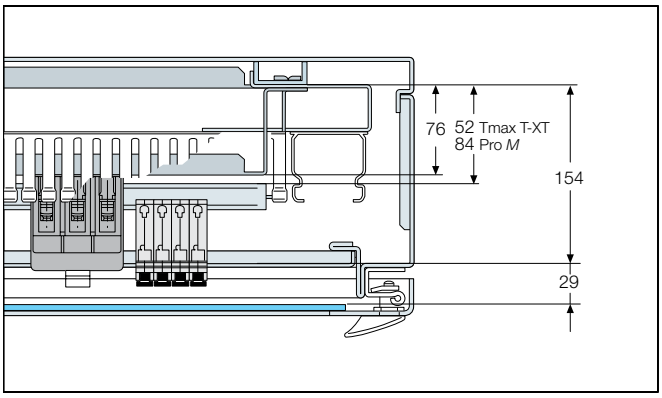

Cable container

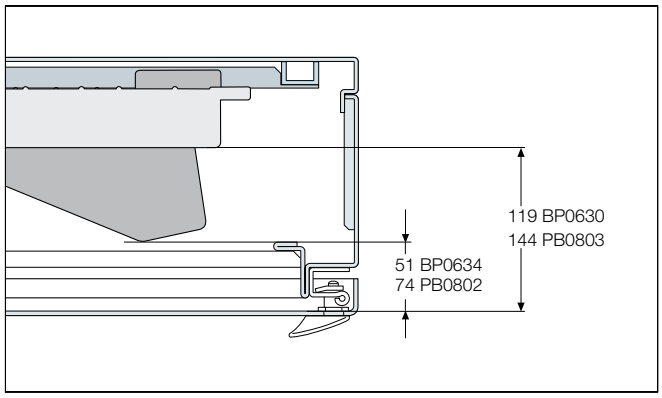

> The measurements are in millimetres

Overall dimensions
ArTu L structures

Floor mounted ArTu L

Front of structure

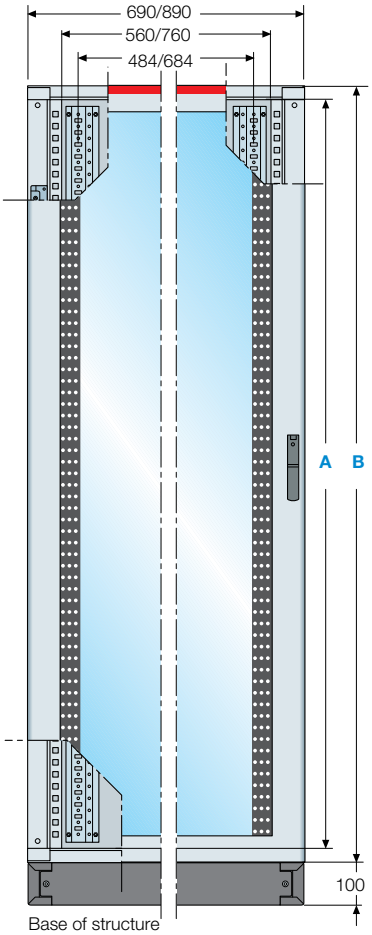

Front of structure with internal cable container

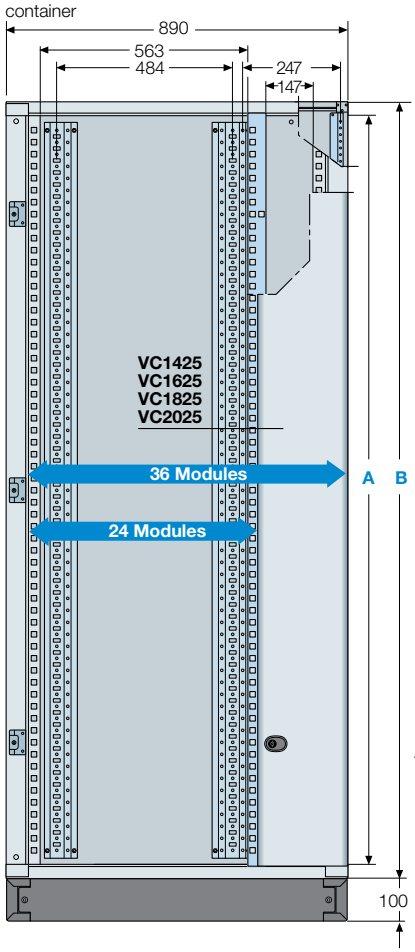

Front of external cable container

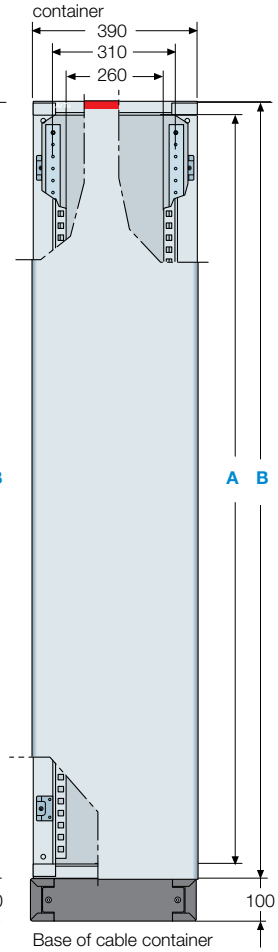

Side

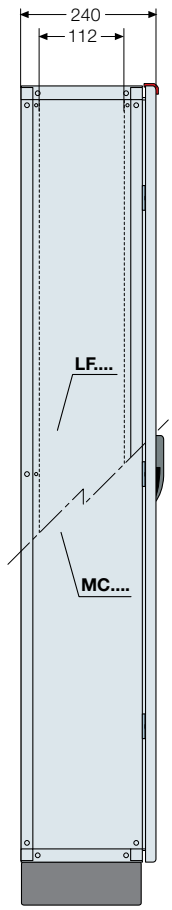

Base of structure

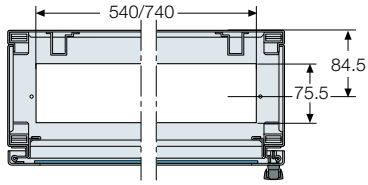

Structure

Code	A	B
SL1400 - SL1408	1400	1450
SL1600 - SL1608	1600	1650
SL1800 - SL1808	1800	1850
SL2000 - SL2008	2000	2050

Base of cable container

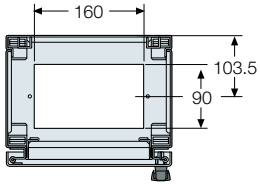

External cable container

Code	A	B
VC1400	1400	1450
VC1600	1600	1650
VC1800	1800	1850
VC2000	2000	2050

Cable connection box

Front view

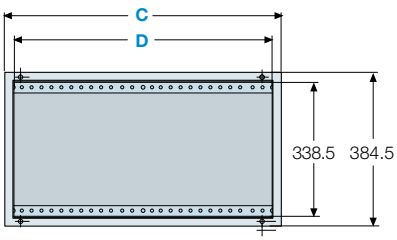

Top view

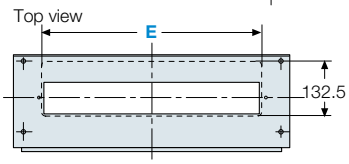

Side view

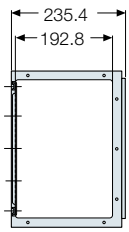

Code	C	D	E
Connection box for structure			
RC1000	690	644	550
Connection box for cable container			
RC2000	390	344	250

Blind base plates

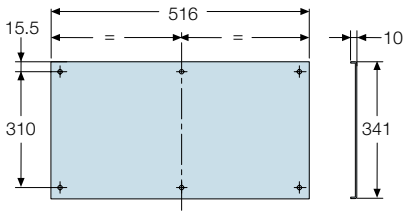

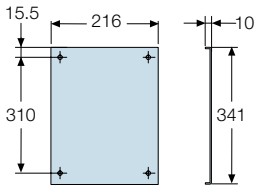

> The measurements are in millimetres

Floor-mounted ArTu L

Fixing to wall/floor

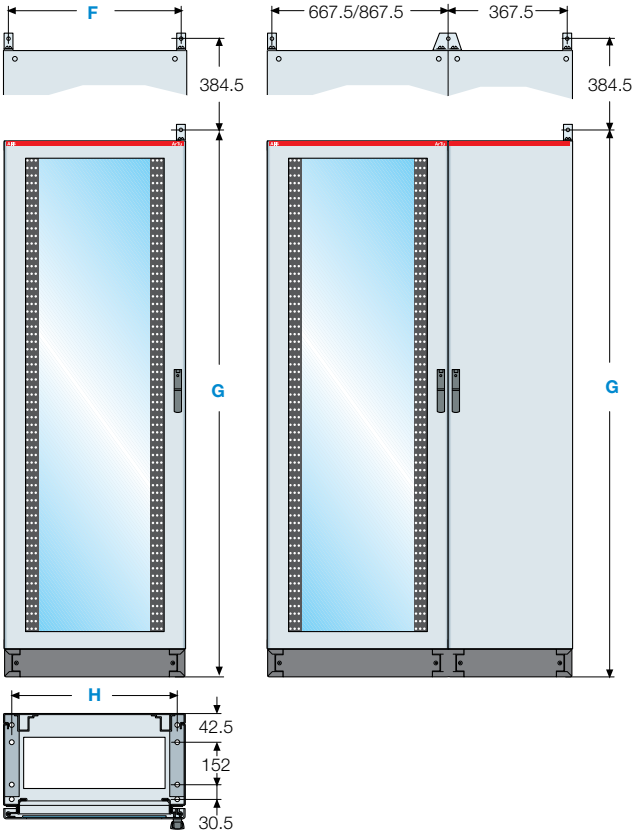

Glazed door 24 mod. DIN + int.cable container

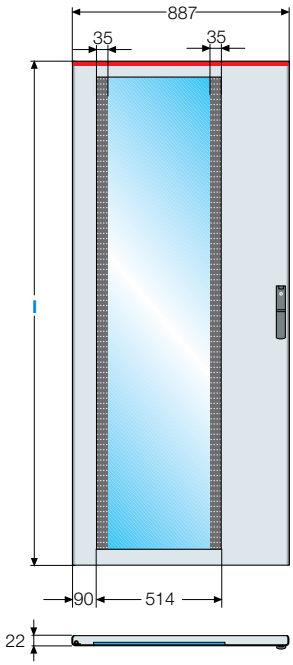

Blind door 24 mod.DIN

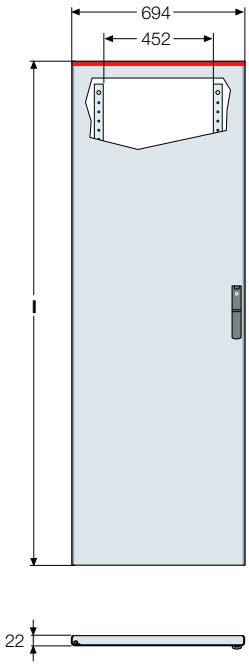

Structures

Code	F	G	H	I
SL1400	645	1575	645	
SL1600	645	1775	645	
SL1800	645	1975	645	
SL2000	645	2175	645	
SL1408	845	1575	845	1444
SL1608	845	1775	845	1644
SL1808	845	1975	845	1844
SL2008	845	2175	845	2044

External cable container

Code	F	G	H
VC1400	345	1575	345
VC1600	345	1775	345
VC1800	345	1975	345
VC2000	345	2175	345

Useful space inside floor-mounted switchgear

Structure

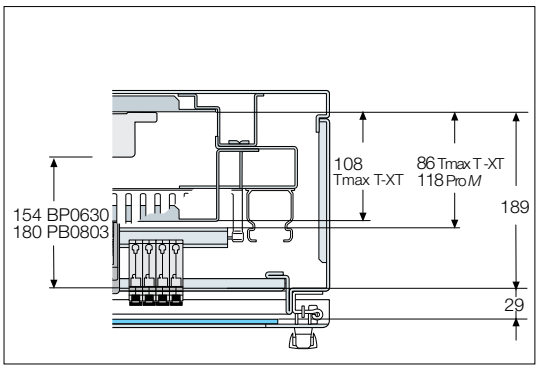

Cable container

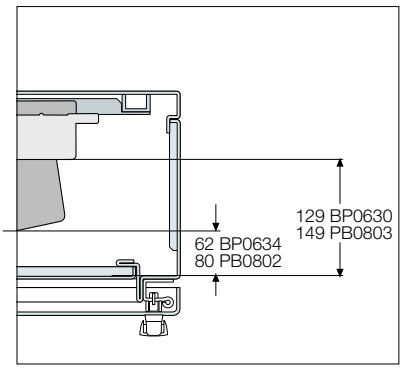

Connection box

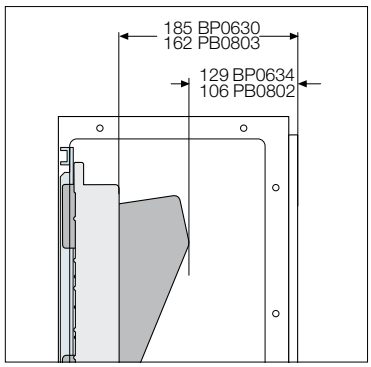

> The measurements are in millimetres

Overall dimensions
ArTu M structures

Wall-mounted ArTu M

Structure

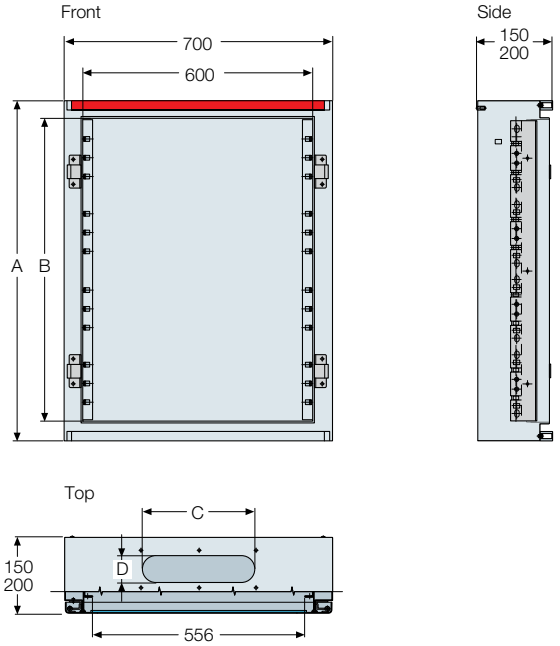

Blind or transparent front door

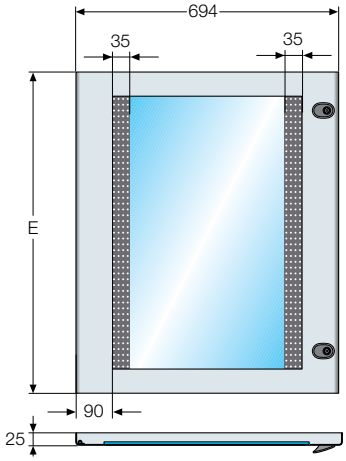

	A	B	C	D	E
Depth 150mm					
SM6061	700	600	183	60	640
SM8061	900	800	183	60	840
Depth 200mm					
SM8062	900	800	320	70	840
SM1062	1100	1000	320	70	1040
SM1262	1300	1200	320	70	1240

Switchgear for operating theatre SM 1069

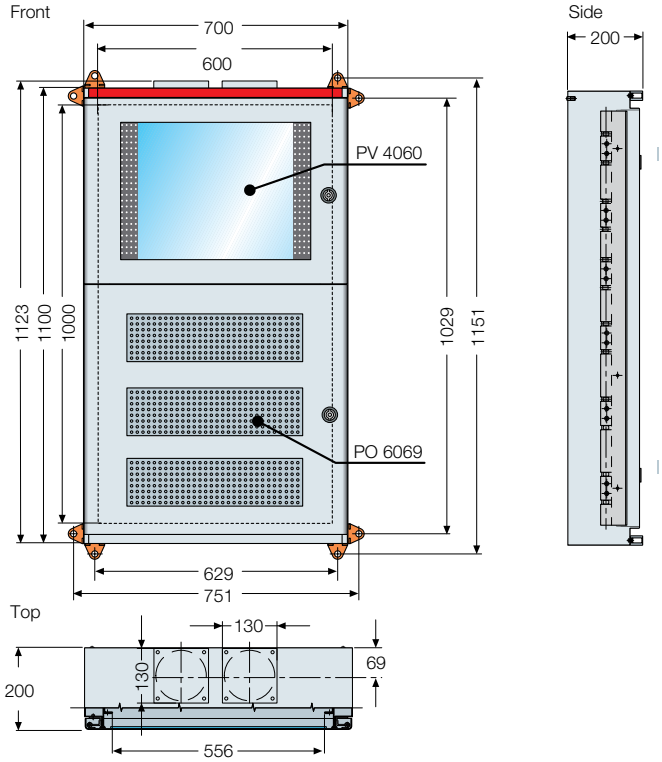

> The measurements are in millimetres

Wall-mounted ArTu M

Fixing to wall

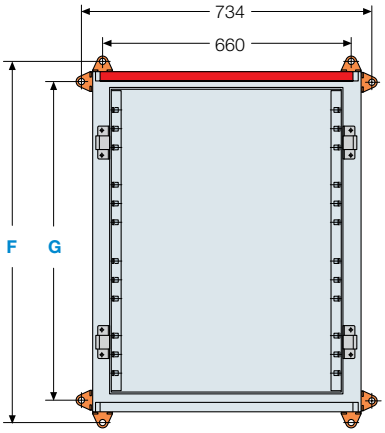

	F	G
Depth 150mm		
SM6061	734	661
SM8061	934	861
Depth 200mm		
SM8062	934	861
SM1062	1134	1061
SM1262	1334	1261

Embedded installation

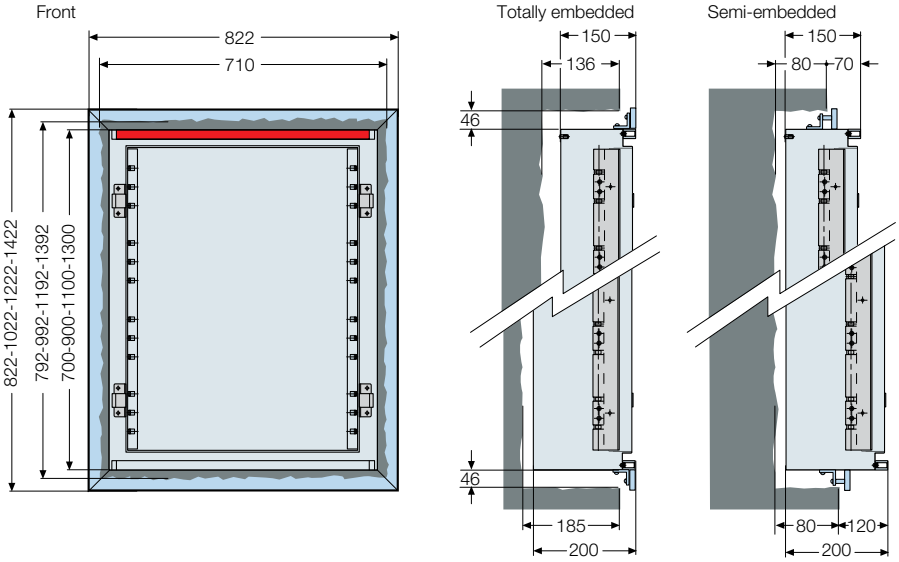

Useful space inside wall-mounted switchgear

Depth 150m

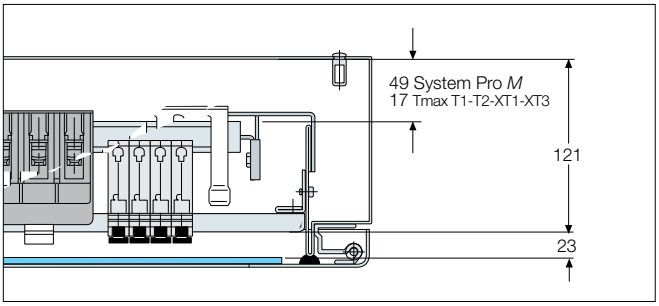

Depth 200mm

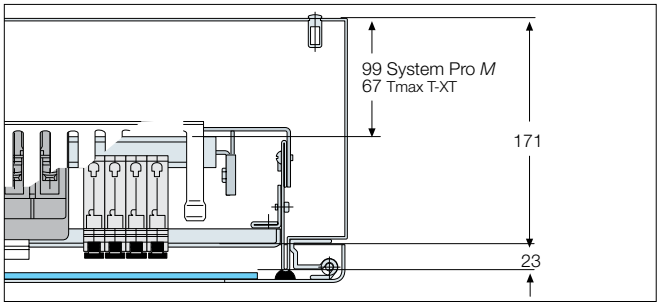

> The measurements are in millimetres

Overall dimensions
ArTu M structures

Floor-mounted ArTu M

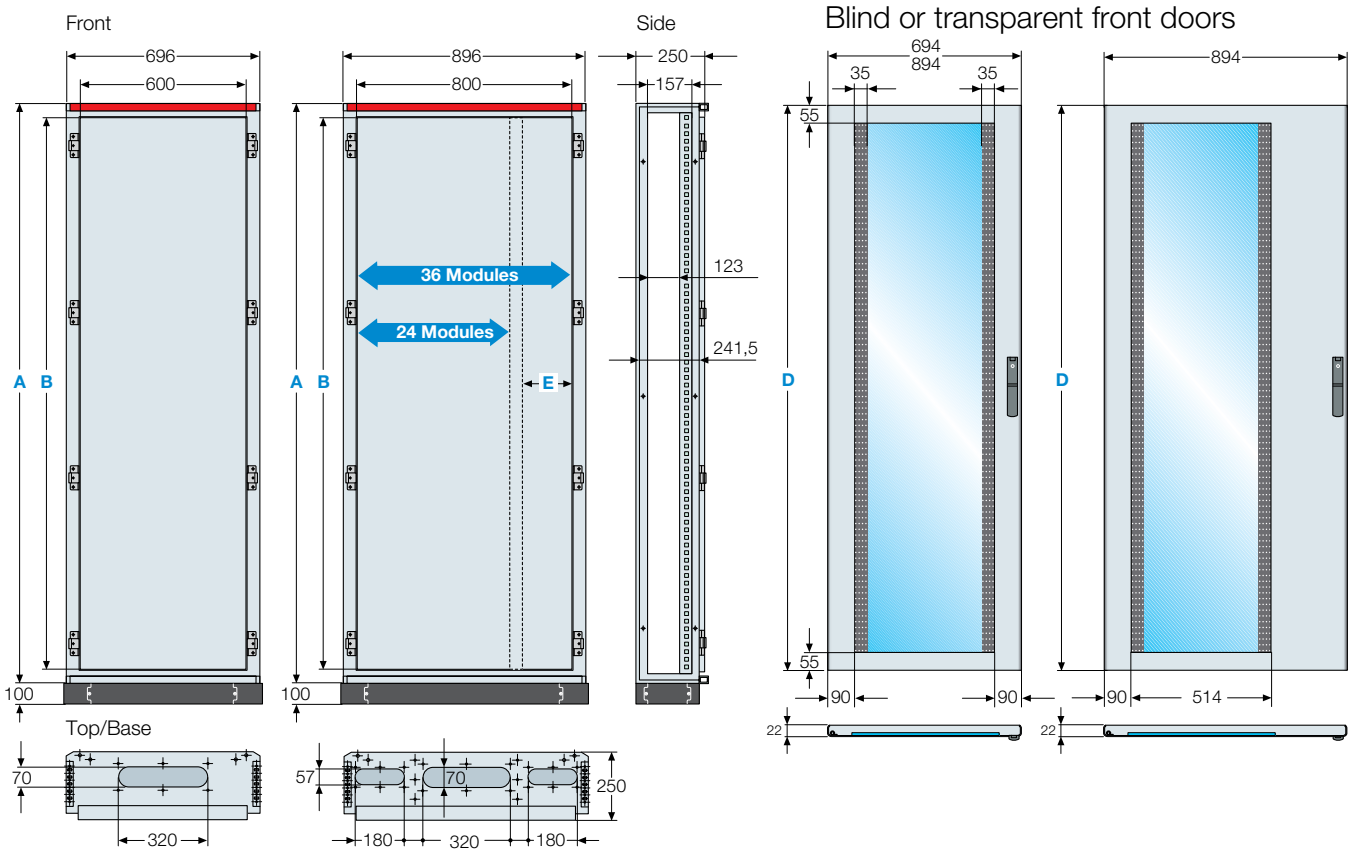

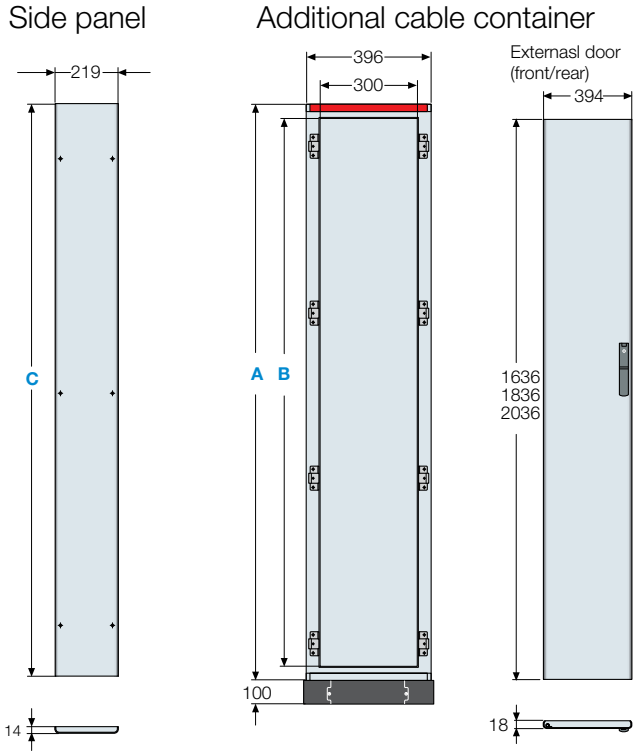

	A	B	C	D	E
Structures without cable container					
SM1462	1496	1400	1490	1436	
SM1662	1696	1600	1690	1636	
SM1862	1896	1800	1890	1836	
SM2062	2096	2000	2090	2036	
Structures with cable container					
SM1682	1696	1600	1690	1636	157
SM1882	1896	1800	1890	1836	157
SM2082	2096	2000	2090	2036	157
Additional cable container					
VC1632	1696	1600			
VC1832	1896	1800			
VC2032	2096	2000			

Overall dimensions for several structures side by side

W x N + 28 = Xmm

W = Column width
N = Number of columns
28 = Overall dimensions 2 side panel

> The measurements are in millimetres

Floor-mounted ArTu M
Fixing to wall/floor

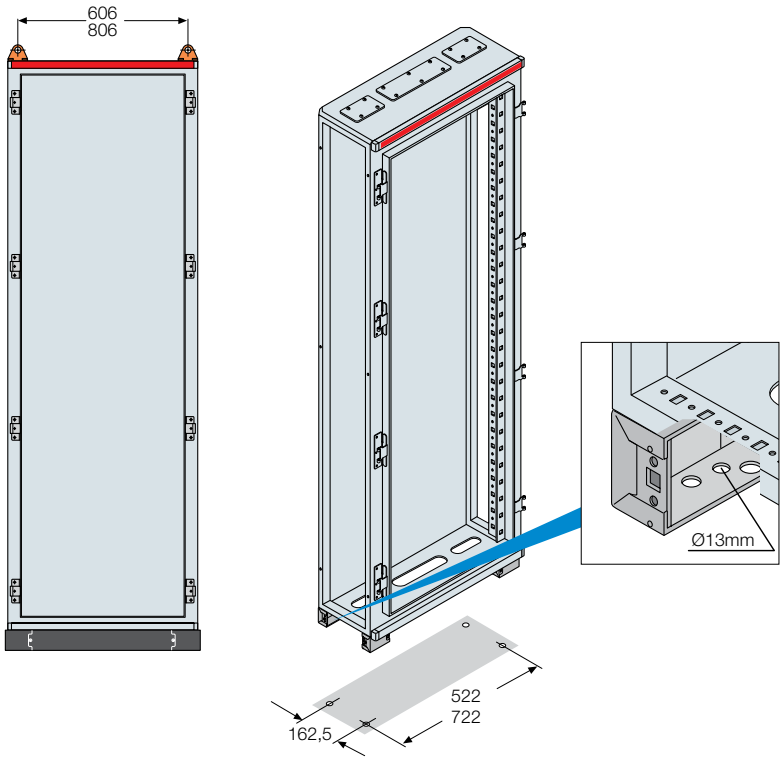

Useful space inside floor-mounted switchgear

	F	G	H	I
System Pro *M*	72	129,5	120 max	81
Tmax T1-T2			78	108
Tmax XT1-XT3			74	112
Tmax XT2-XT4			86	124

Structure

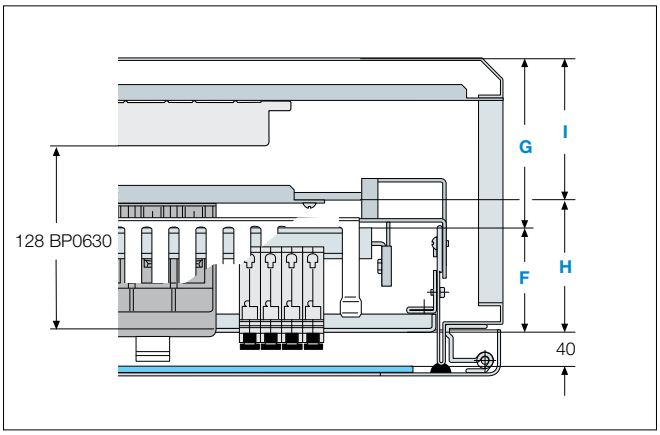

Cable container

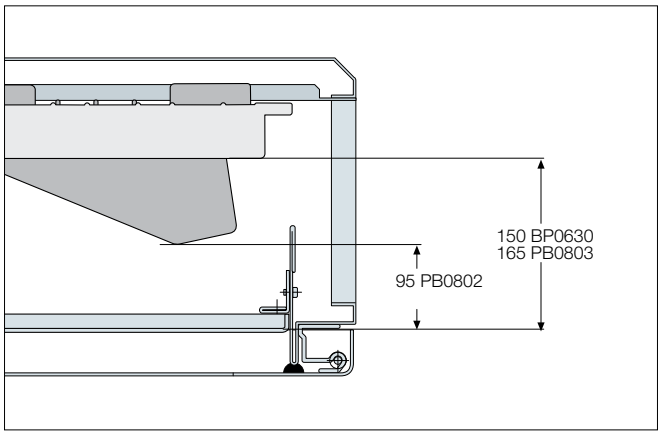

> The measurements are in millimetres

Overall dimensions
ArTu K structures

ArTu K

Structure without cable container

Structure with cable container

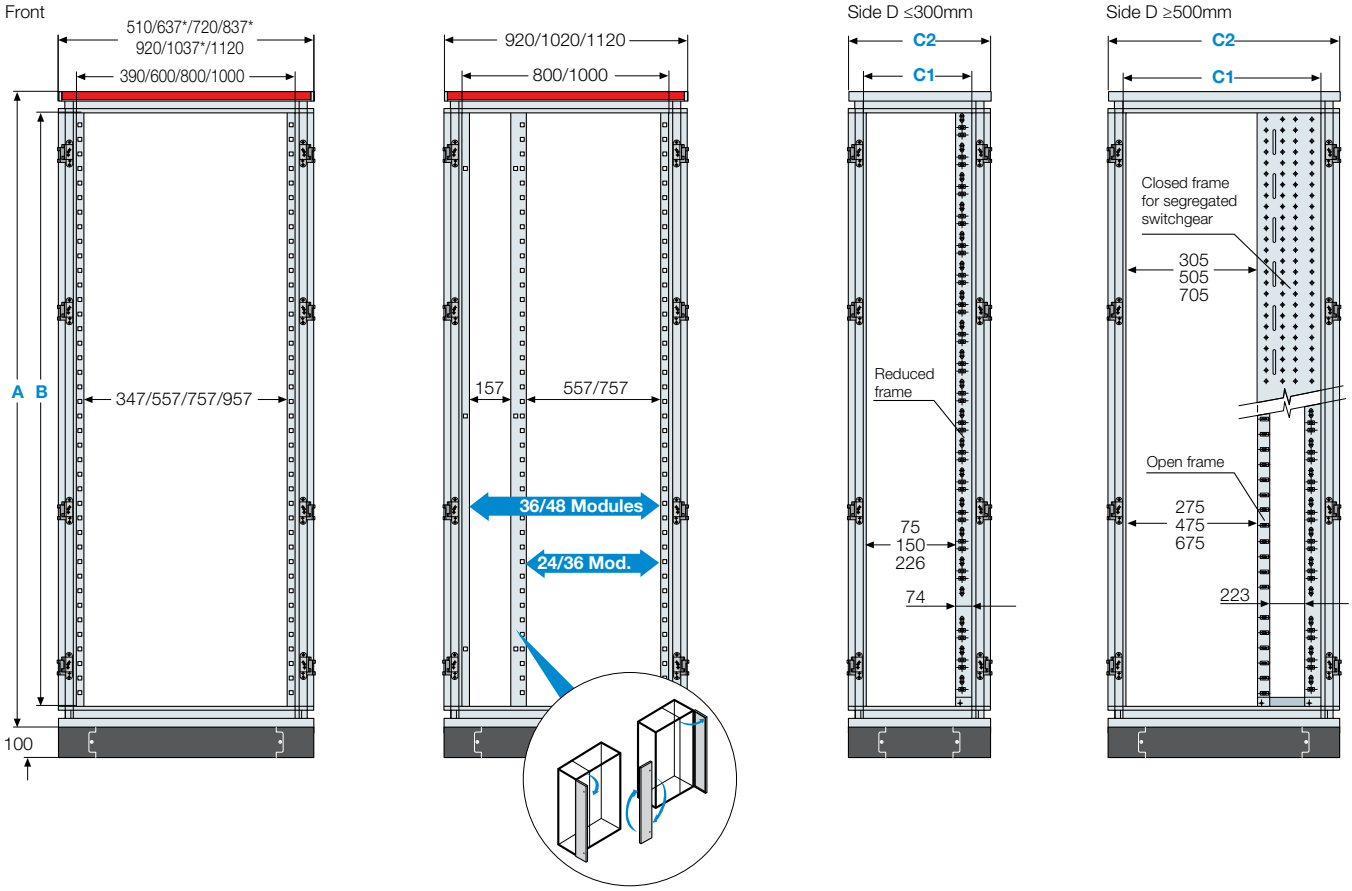

	A	B	C1	C2
Structure height 1600mm				
SK6025/SK8025	1731	1600	150	270
Structure height 1800mm				
SK6025/SK8025	1931	1800	150	270
SK4040/SK6040/SK8040	1931	1800	225	345
SK4050/SK6050/SK8050	1931	1800	300	420
SK4060/SK6060/SK8060/SK6600*	1931	1800	500	620
SK4080/SK6080/SK8080/SK8800*	1931	1800	700	820
SK4010/SK6010/SK8010	1931	1800	900	1020
SK1010	1931	1800		1020
Structure height 2000mm				
SK6025/SK8025	2131	2000	150	270
SK4040/SK6040/SK8040	2131	2000	225	345
SK4050/SK6050/SK8050	2131	2000	300	420
SK4060/SK6060/SK8060/SK6600*	2131	2000	500	620
SK4080/SK6080/SK8080/SK8800*	2131	2000	700	820
SK4010/SK6010/SK8010	2131	2000	900	1020
SK1010	2131	2000		1020

* Angled structures

Overall dimensions for several structures side by side

W x N + 28 = Xmm

W = Column width
N = Number of columns
28 = Overall dimensions 2 side panels

> The measurements are in millimetres

ArTu K

Bases

SK6025 (W600xD150)
SK8025 (W800xD150)
VC3025 (W300xD150)

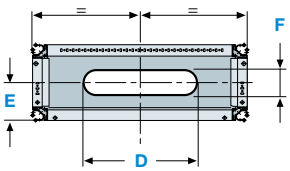

SK4040 (W390xD225)
SK6040 (W600xD225)
VC3040 (W300xD225)

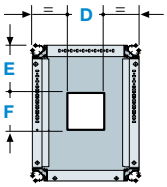

SK8040 (W800xD225)

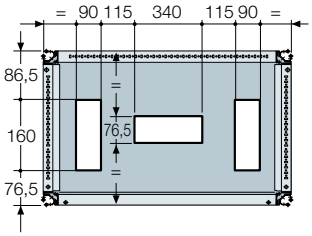

SK8060 (W800xD500)

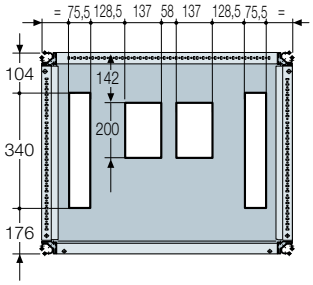

VC3060 (W300xD500)
VC3080 (W300xD700)

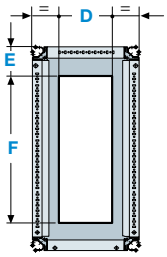

SK4060 (W390xD500)
SK4080 (W390xD700)

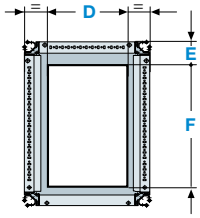

SK6060 (W600xD500)
SK6080 (W600xD700)

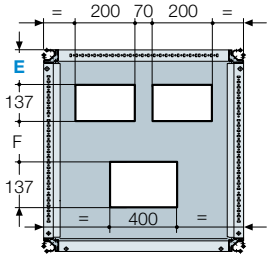

SK8080 (W800xD700)

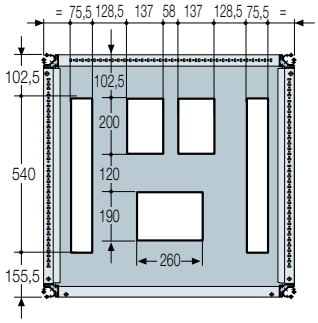

SK4010 (W390xD900)
SK6010 (W600xD900)
SK8010 (W800xD900)
VC3010 (w300xD900)

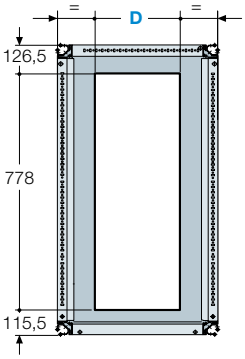

SK1010 (W1000xD900)

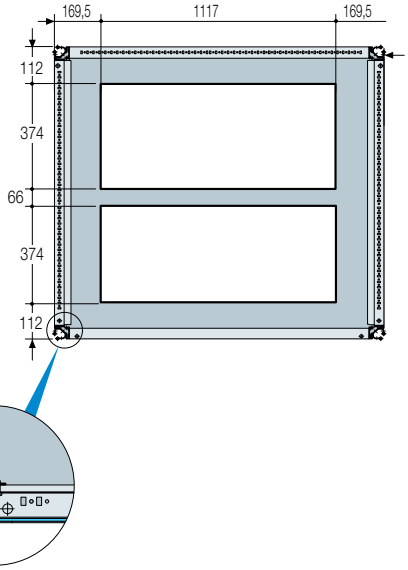

	D	E	F
SK6025 (W600xD150)	320	140	70
SK8025 (W800xD150)	320	140	70
SK4040 (W390xD255)	200	108	137
SK4050 (W390xD300)	320	94,5	235
SK4060 (W390xD500)	320	99	420
SK4080 (W390xD700)	320	99	620
SK4010 (W390xD900)	270	125	780
SK6040 (W600xD225)	540	123,5	70
SK6050 (W600xD300)	530	94,5	235
SK6060 (W600xD500)		93	163
SK6080 (W600xD700)		123	333
SK6010 (W600xD900)	467	125	780
SK8050 (W800xD900)	730	94,5	235
SK8010 (W800xD300)	467	125	780
VC3025 (W300xD150)	180	140	57
VC3040 (W300xD225)	200	103	137
VC3050 (W300xD300)	230	99	235
VC3060 (W300xD500)	230	99	420
VC3080 (W300xD700)	230	99	620
VC3010 (W390xD900)	200		

> The measurements are in millimetres

Overall dimensions
ArTu K structures

ArTu K

Transparent front doors

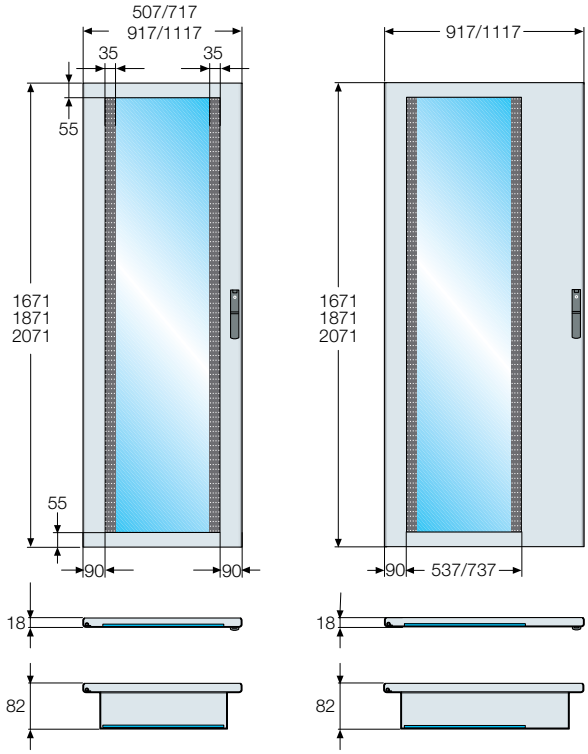

Side door

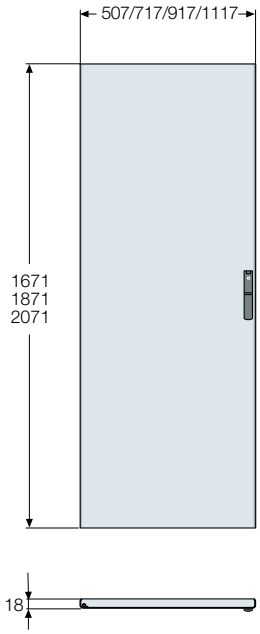

Side door

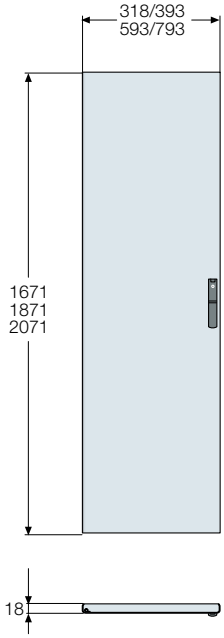

Blind side or ventilated panels

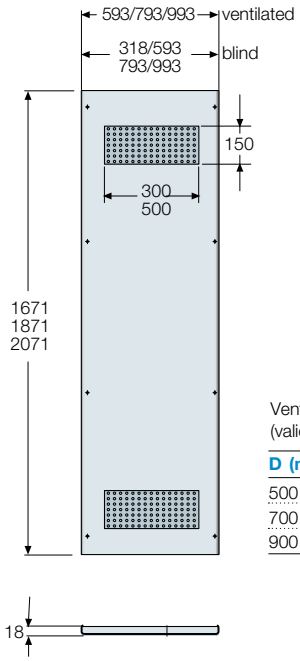

Ventilation area air inlet side
(valid for a single panel)

D (mm)	cm²
500	75
700	113
900	170

Rear panels

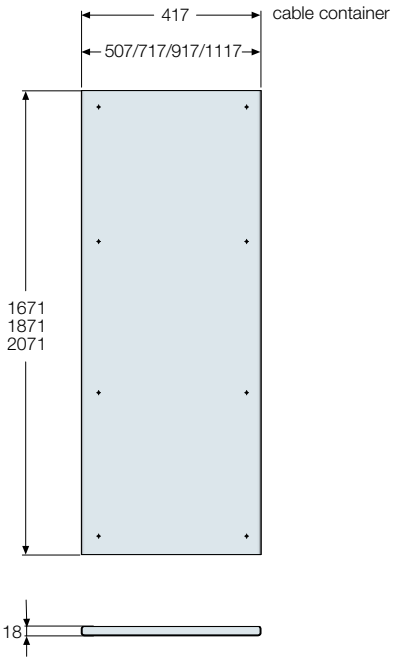

> The measurements are in millimetres

ArTu K
Fixing to wall/floor

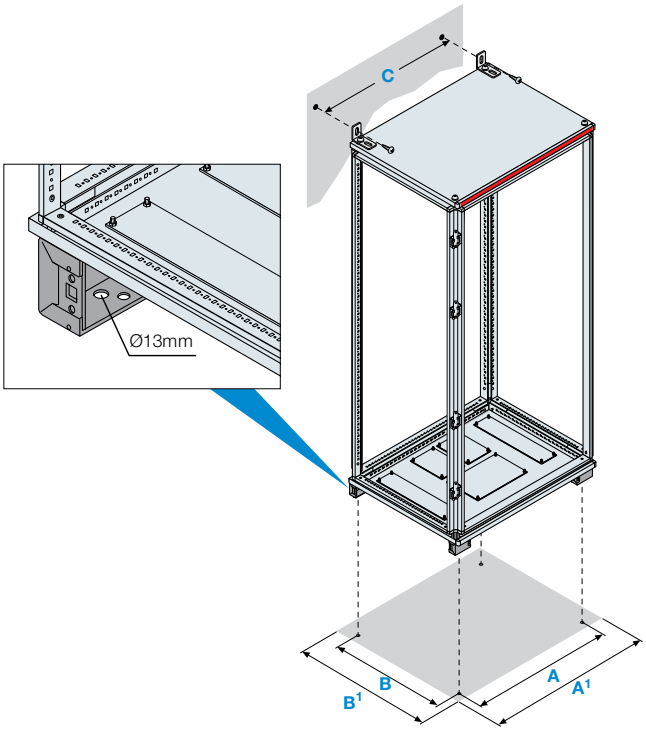

Structure

Dimensions	Code	A	A¹	B	B¹	C
L600xP150	SK6025	546	720	189	287	620
L800xP150	SK8025	746	920	189	287	820
L390xP225	SK4040	336	510	264	362	410
L390xP300	SK4050	336	510	339	437	410
L390xP500	SK4060	336	510	539	637	410
L390xP700	SK4080	336	510	739	837	410
L390xP900	SK4010	336	510	939	1037	410
L600xP225	SK6040	546	720	264	362	620
L600xP300	SK6050	546	720	339	437	620
L600xP500	SK6060	546	720	539	637	620
L600xP700	SK6080	546	720	739	837	620
L600xP900	SK6010	546	720	939	1037	620
L800xP225	SK8040	746	920	264	362	820
L800xP300	SK8050	746	920	339	437	820
L800xP500	SK8060	746	920	539	637	820
L800xP700	SK8080	746	920	739	837	820
L800xP900	SK8010	746	920	939	1037	820
L1000xP900	SK1010	946	1120	939	1037	1020

Additional cable container

Code	W (mm)	A
ZR3000	420	320
ZR4000	510	410
ZR6000	720	620
ZR8000	920	820

D (mm)	B
287	170
362	245
437	320
637	520
837	720
1037	920

7

Additional cable container

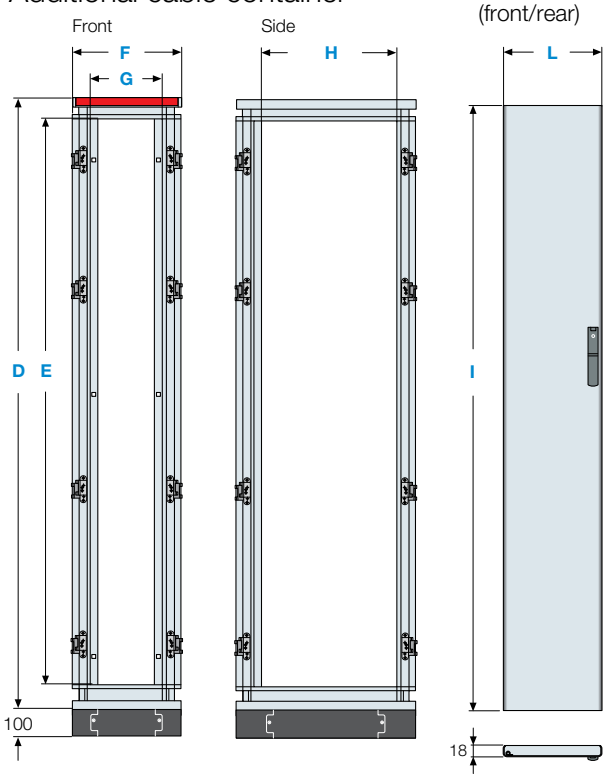

Additional cable container

Dimensions	Code	D	E	F	G	H	I	L
H=1600mm								
L300xP150	VC3025	1731	1600	420	300	150	1671	417
H=1800mm								
L300xP150	VC3025	1931	1800	420	300	150	1871	417
L300xP225	VC3040	1931	1800	420	300	225	1871	417
L300xP300	VC3050	1931	1800	420	300	300	1871	417
L300xP500	VC3060	1931	1800	420	300	500	1871	417
L300xP700	VC3080	1931	1800	420	300	700	1871	417
L300xP900	VC3010	1931	1800	420	300	900	1871	417
H=2000mm								
L300xP150	VC3025	2131	2000	420	300	150	1871	417
L300xP225	VC3040	2131	2000	420	300	225	1871	417
L300xP300	VC3050	2131	2000	420	300	300	1871	417
L300xP500	VC3060	2131	2000	420	300	500	1871	417
L300xP700	VC3080	2131	2000	420	300	700	1871	417
L300xP900	VC3010	2131	2000	420	300	900	1871	417

> The measurements are in millimetres

Overall dimensions
ArTu K structures

ArTu K
Useful space inside the switchgear

Depth 150mm

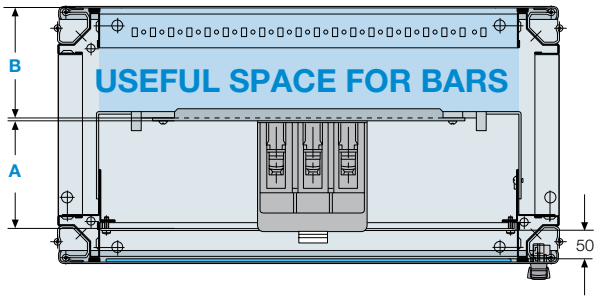

Depth 225/300mm

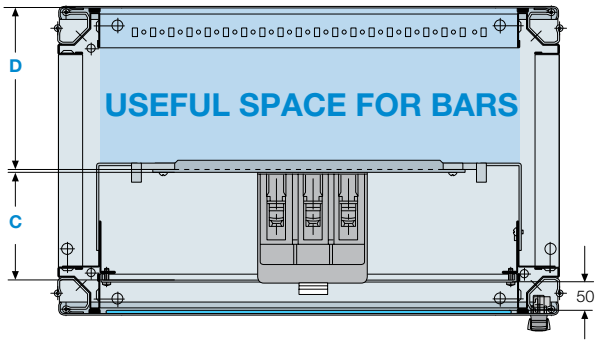

7

	FIXED		PLUG-IN		WITHDR.	
	A	B	A	B	A	B
T1-T2-T3	78	146	-	-	-	-
T4-T5-T6	107	117	-	-	-	-
XT1-XT3	74	150	-	-	-	-
XT2-XT4	86	138	-	-	-	-

	FIXED		PLUG-IN		WITHDR.	
	C	D	C	D	C	D
Depth 225mm						
T1-T2-T3	78	221	149	150	-	-
T4-T5-T6	107	192	157	142	190	109
XT1-XT3	74	225	124	175	-	-
XT2-XT4	86	213	136	163	170	129
Depth 300mm						
T1-T2	78	296	149	225	-	-
T4-T5-T6	107	267	157	217	190	184
XT1-XT3	74	300	124	250	-	-
XT2-XT4	86	288	136	238	170	204

> The measurements are in millimetres

ArTu K

Useful space inside the switchgear

Depth 500mm

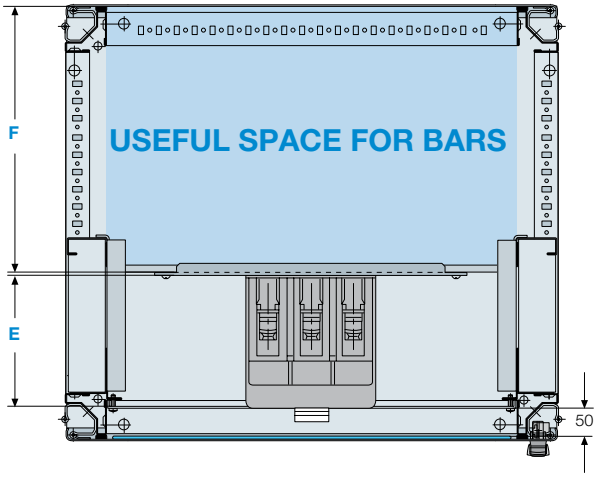

Depth 700/900mm

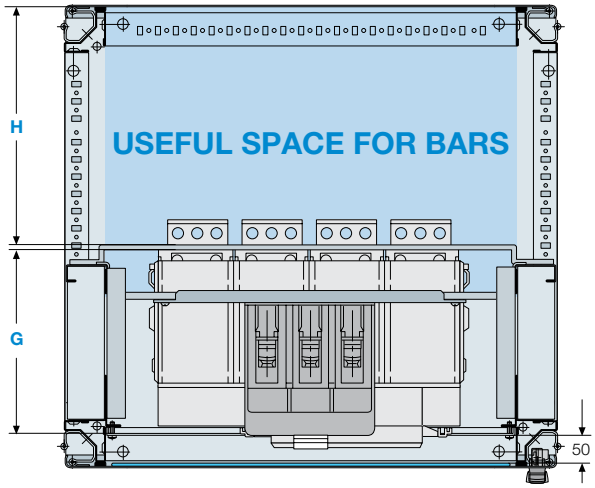

	FIXED		PLUG-IN		WITHDR.	
	E	F	E	F	E	F
T1-T2-T3	78	493	149	425	-	-
T4-T5-T6	107	467	157	417	190	384
T7-X 1	146	428	-	-	251	323
XT1-XT3	74	500	124	450	-	-
XT2-XT4	86	488	136	438	170	404

	FIXED		PLUG-IN		WITHDR.	
	G	H	G	H	G	H
Depth 700mm						
T1-T2-T3	78	696	149	625	-	-
T4-T5-T6	107	667	157	617	190	584
T7-X 1	146	628	-	-	251	523
E1-E2-E3-E4	266	508	-	-	378	396
XT1-XT3	74	700	124	650	-	-
XT2-XT4	86	688	136	638	170	604
Depth 900mm						
T1-T2	78	896	149	825	-	-
T4-T5-S6	107	867	157	817	190	784
T7-X 1	146	828	-	-	251	723
E1-E2-E3-E4-E6	266	708	-	-	378	596
XT1-XT3	74	900	124	850	-	-
XT2-XT4	86	888	136	838	170	804

> The measurements are in millimetres

Overall dimensions
ArTu L-M-K structures

Kit for apparatus

Panels for apparatus mounted on DIN rail

1 DIN row

W=390mm (12 DIN mod.)
W=600mm (24 DIN mod.)
W=800mm (36 DIN mod.)
W=1000mm (48 DIN mod.)

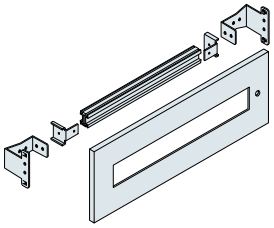

Width 390mm

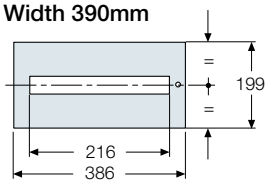

Width 600/800mm

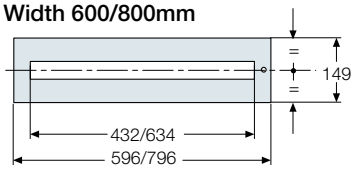

Width 600/800/1000mm

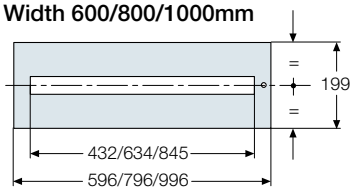

Version for Tmax with diff. mod.

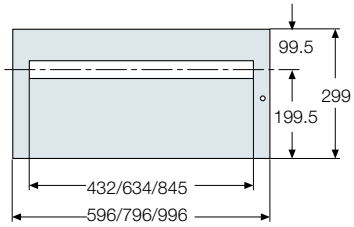

Version for Unifix H

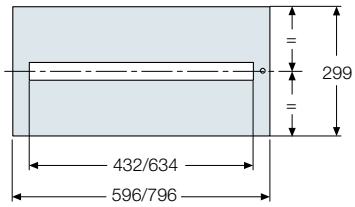

2 DIN rows

W=600mm (48 DIN mod.)
W=800mm (72 DIN mod.)

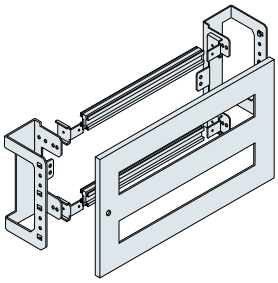

Width 600/800mm

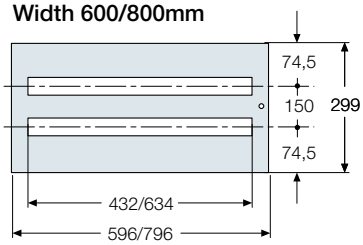

3 DIN rows

W=600mm (72 mod.DIN)

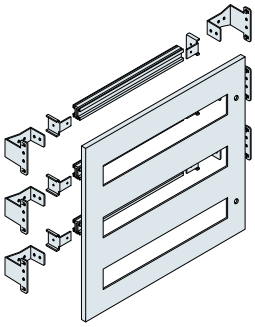

Width 600mm

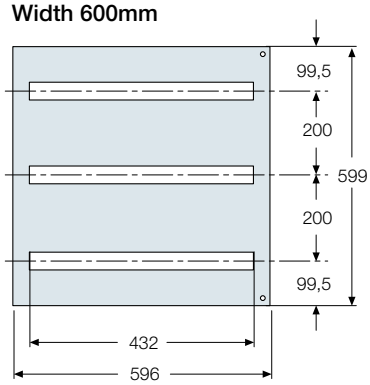

> The measurements are in millimetres

Kit for apparatus

Blind flat plates - PF

Useful dimensions

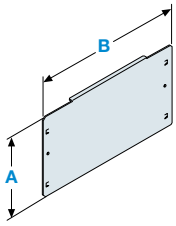

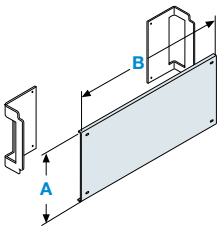

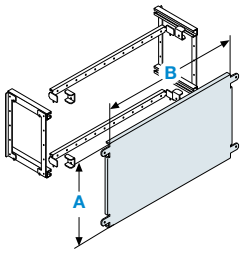

	ArTu L				ArTu M-K d=150m				ArTu K without segregation							
H functional	W=600mm		W=800mm		W=600mm		W=800mm		W=390mm		W=600mm		W=800mm		W=1000mm	
(mm)	A	B	A	B	A	B	A	B	A	B	A	B	A	B	A	B
200	175	440	175	592	184	449	184	649	184	284	184	440	184	650	184	850
300	275	440	275	592	-	-	-	-	284	284	284	440	284	650	284	850
400	375	440	375	592	384	449	384	649	384	284	384	440	384	650	384	850
600	575	440	575	592	-	-	-	-	584	284	584	440	584	650	584	850
800	775	440	775	592	-	-	-	-	-	-	-	-	-	-	775	850

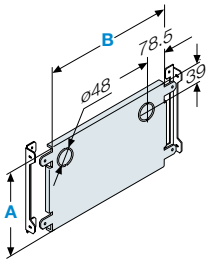

	ArTu K segregated							
H functional	W=390mm		W=600mm		W=800mm		W=1000mm	
(mm)	A	B	A	B	A	B	A	B
200	190	374	190	584	190	784	190	984
300	290	374	290	584	290	784	290	984
400	390	374	390	584	390	784	390	984
600	590	374	590	584	590	784	590	984
800	-	-	790	584	790	784	-	-

Blind recessed plates - FR

Useful dimensions

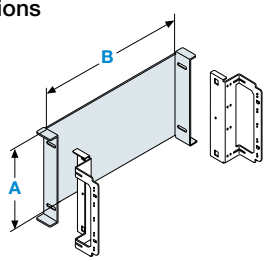

	ArTu M-K d=150m				ArTu K without segregation			
H functional	W=600mm		W=800mm		W=600mm		W=800mm	
(mm)	A	B	A	B	A	B	A	B
200	191	426	191	626	180	526	180	726
400	391	426	391	626	257	526	257	726
600	-	-	-	-	400	526	400	726

> The measurements are in millimetres

Overall dimensions
ArTu L-M-K structures

Kit for apparatus

ArTu L-M-K
Blind and ventilated panels

Blind H (mm)	Ventilated H (mm)
99	99
199	199
299	
399	
499	
599	
799	

ArTu L-M-K
Panels for instruments

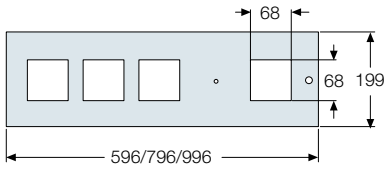

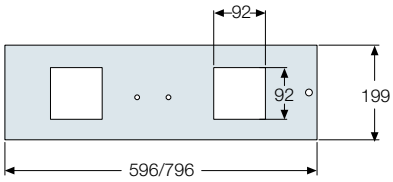

ArTu L-M-K
Blind and recessed panels

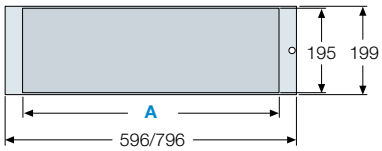

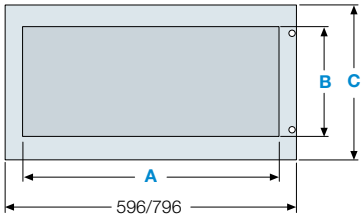

Code	A	B	C
PR2600	506		
PR2800	706		
PR4600	506	308	399
PR4800	706	308	399
PR6600	506	508	599
PR6800	706	508	599

ArTu K
Adjustable back plate

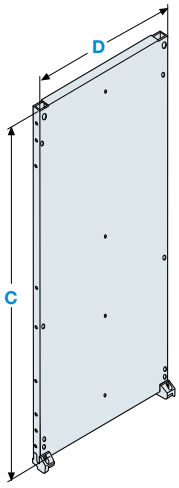

Code	C	D
PF1806	1776	580
PF1808	1776	780
PF2006	1966	580
PF2008	1966	780

> The measurements are in millimetres

Busbars

BA0400

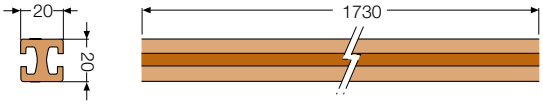

BA0800

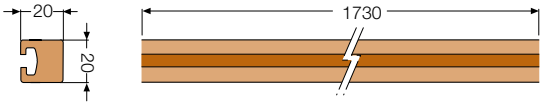

BA1250

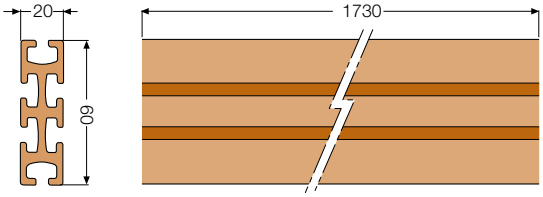

BA1600

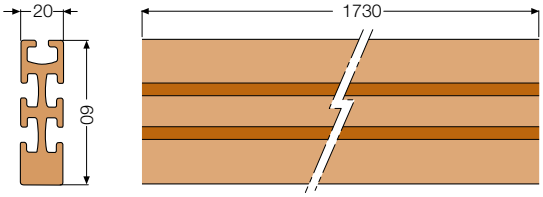

BA2000

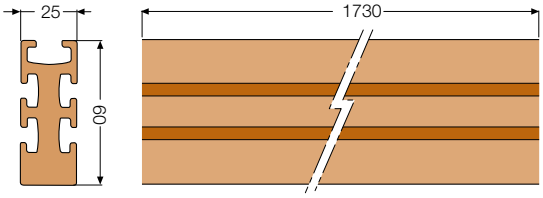

Insulators

PB 0803

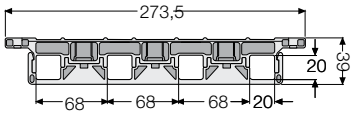

PB 0802

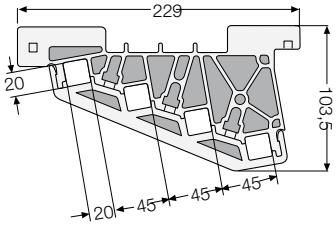

PB 1601

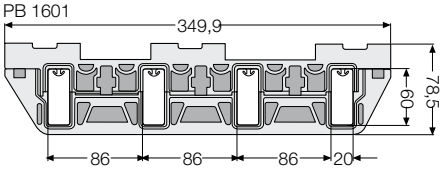

PB 1600

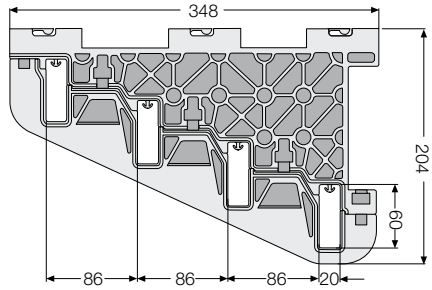

PB 1603

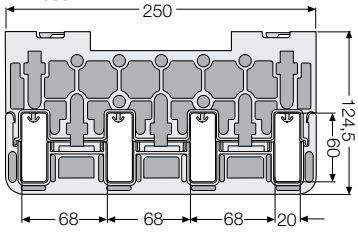

PB 3201

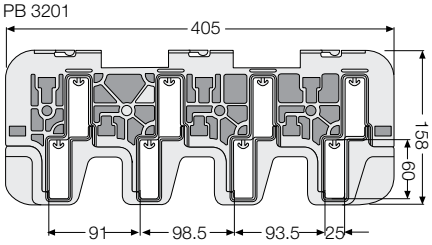

Accessories

AD1077

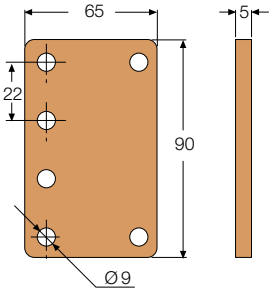

> The measurements are in millimetres

Overall dimensions
ArTu L-M-K structures

Distribution systems
Flat busbars

Busbars

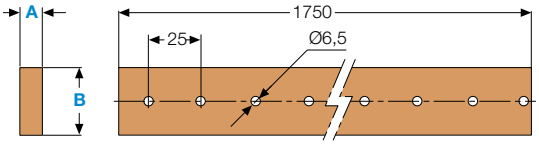

Code	In (A)	A	B
BR0250	250	5	15
BR0400	400	5	25
BR0630	630	10	30
BR4005	400	5	32

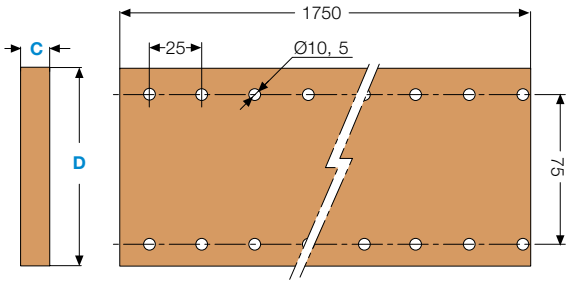

Code	In (A)	C	D
BR6305	630	5	50
BR8005	800	5	63
BR1250	1250	5	100
BR1600	1600	10	100

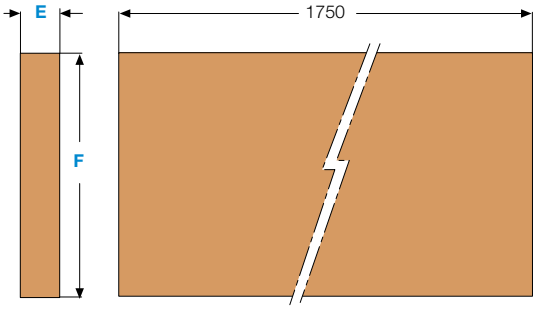

Code	In (A)	C	D
BR2000	4000	10	120
BR2500	5000	10	160
BR2010	6300	10	200

Insulators

Insulators for busbars up to 630A

BP0634

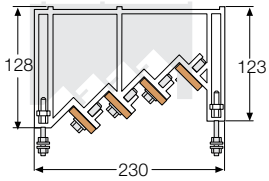

BP0630

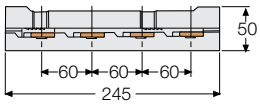

Insulators for busbars up to 6300A

BP1250

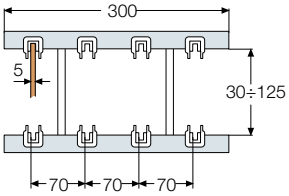

BP1600

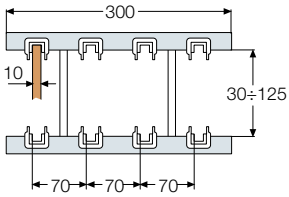

BP2500

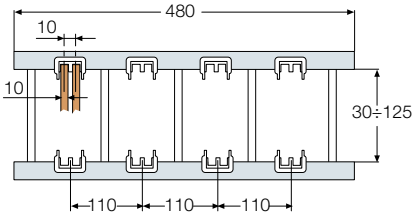

BP3200

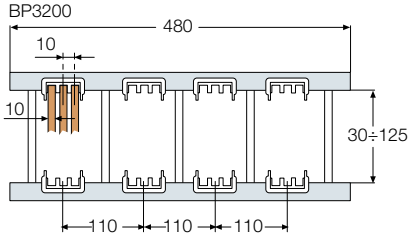

BP1621/BP1622

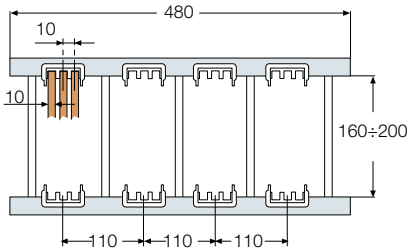

> The measurements are in millimetres

Unifix H

24 - 36 modules

Front view

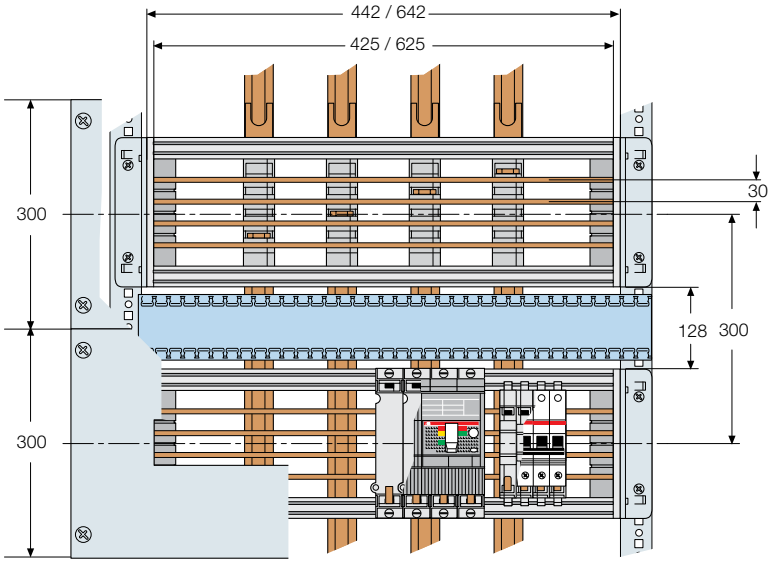

Side view

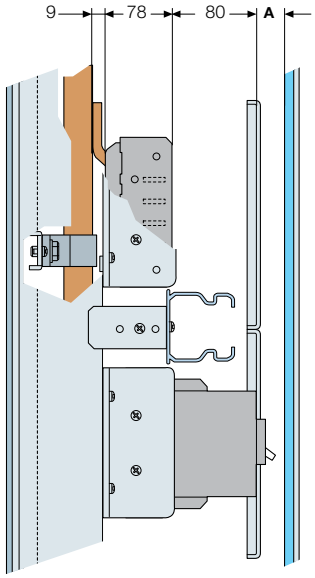

Unifix L

Front view

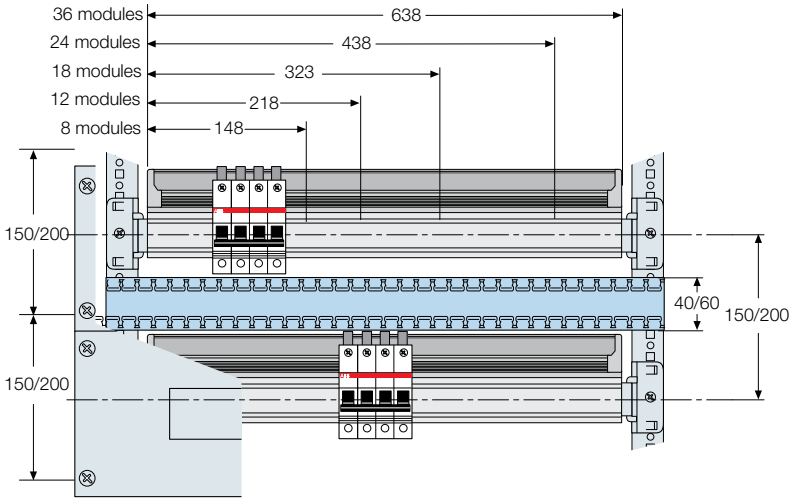

Side view

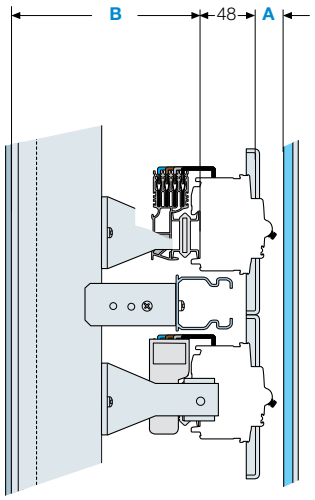

	A	B
ArTu L Wall-mounted	29	104
ArTu L Floor mounted	29	140
ArTu M Wall-mounted (D=150mm)	21	73
ArTu M Wall-mounted (D=200mm)	21	123
ArTu M Floor mounted	40	152
ArTu K (D=150mm)	50	173
ArTu K (D=225mm)	50	248
ArTu K (D=300mm)	50	323
ArTu K (D=500mm)	50	523
ArTu K (D=700mm)	50	723
ArTu K (D=900mm)	50	923

> The measurements are in millimetres

Overall dimensions
ArTu L-M-K structures

Accessories

Aluminium section EV1050

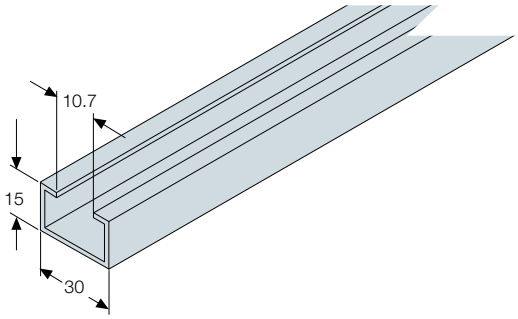

Aluminium nuts for EV1050

EV1056

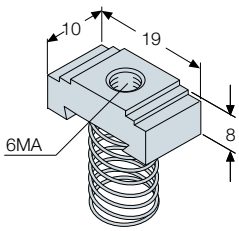

EV1058

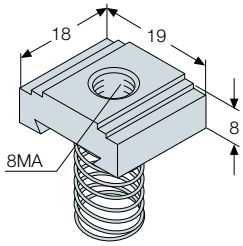

Brackets for cables EV1090 / EV1091

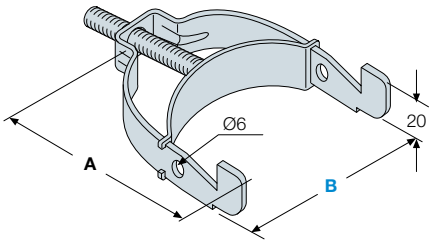

	A	B
EV1090	49	20
EV1091	65	36
EV1092	85	51
EV1093	106	80

Angles for busbars EV105

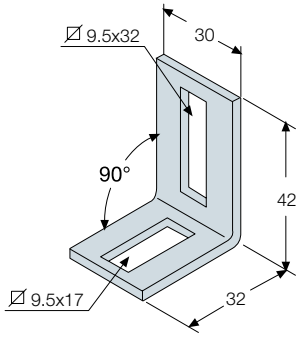

> The measurements are in millimetres

Accessories

Terminal box supports

EV1110

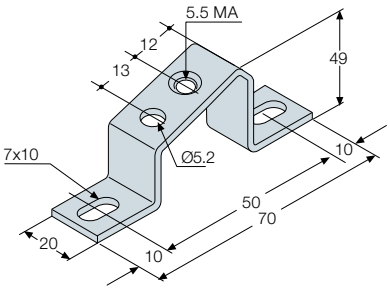

EV1112

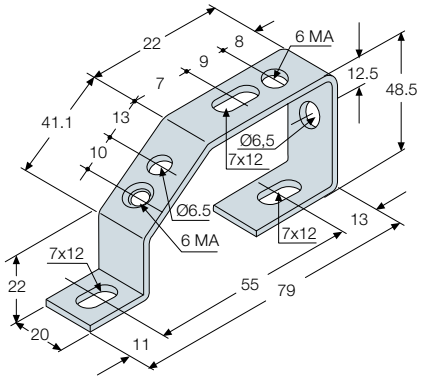

Depth adapter

AP6000

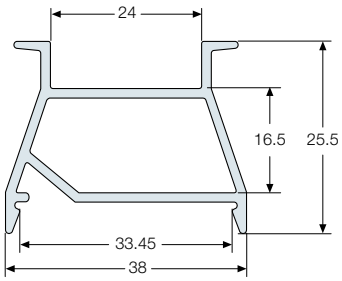

AP6001

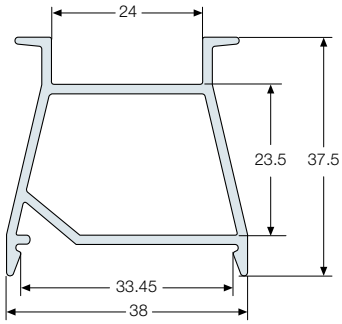

> The measurements are in millimetres

Order codes

Gemini switchboards 8/2
ArTu L structures 8/4
ArTu M structures 8/8
ArTu K structures 8/12

8

Gemini switchboards
Order codes

Code	Structure	Weight Kg.	Page
05 270	Gemini	0	2/16
05 272	Gemini	0	2/16
05 274	Gemini	0	2/16
05 276	Gemini	0	2/16
05 278	Gemini	0	2/16
05 280	Gemini	0	2/16
05 282	Gemini	0	2/16
12 849	Gemini	0	2/22
12 851	Gemini	0	2/22
12 863	Gemini	0	2/22
1SL0201A00	Gemini	4,76	2/11
1SL0202A00	Gemini	7,94	2/11
1SL0203A00	Gemini	10,65	2/11
1SL0204A00	Gemini	12,78	2/11
1SL0205A00	Gemini	17,97	2/11
1SL0206A00	Gemini	25,55	2/11
1SL0211A00	Gemini	4,76	2/11
1SL0212A00	Gemini	7,94	2/11
1SL0213A00	Gemini	10,65	2/11
1SL0214A00	Gemini	12,78	2/11
1SL0215A00	Gemini	17,97	2/11
1SL0216A00	Gemini	25,55	2/11
1SL0221A00	Gemini	3,64	2/11
1SL0222A00	Gemini	6,08	2/11
1SL0223A00	Gemini	8,2	2/11
1SL0224A00	Gemini	9,48	2/11
1SL0225A00	Gemini	14	2/11
1SL0226A00	Gemini	19,56	2/11
1SL0231A00	Gemini	1,12	2/12
1SL0232A00	Gemini	1,86	2/12
1SL0233A00	Gemini	2,45	2/12
1SL0234A00	Gemini	3,3	2/12
1SL0235A00	Gemini	3,97	2/12
1SL0236A00	Gemini	5,99	2/12
1SL0241A00	Gemini	1,12	2/12
1SL0242A00	Gemini	1,86	2/12
1SL0243A00	Gemini	2,45	2/12
1SL0244A00	Gemini	3,3	2/12
1SL0245A00	Gemini	3,97	2/12
1SL0246A00	Gemini	5,99	2/12
1SL0251A00	Gemini	0,455	2/12
1SL0252A00	Gemini	0,725	2/12
1SL0253A00	Gemini	1,106	2/12
1SL0254A00	Gemini	1,35	2/12

Code	Structure	Weight Kg.	Page
1SL0255A00	Gemini	1,8	2/12
1SL0256A00	Gemini	4,1	2/12
1SL0259A00	Gemini	1,13	2/17
1SL0260A00	Gemini	2,75	2/17
1SL0261A00	Gemini	3,65	2/17
1SL0262A00	Gemini	4,875	2/17
1SL0263A00	Gemini	5,975	2/17
1SL0264A00	Gemini	10,75	2/17
1SL0267A00	Gemini	0,575	2/17
1SL0268A00	Gemini	1,35	2/17
1SL0269A00	Gemini	1,7	2/17
1SL0270A00	Gemini	2,362	2/17
1SL0271A00	Gemini	2,9	2/17
1SL0272A00	Gemini	5,35	2/17
1SL0275A00	Gemini	0,608	2/17
1SL0276A00	Gemini	1,458	2/17
1SL0277A00	Gemini	0,62	2/17
1SL0278A00	Gemini	2,55	2/17
1SL0279A00	Gemini	3,1	2/17
1SL0280A00	Gemini	5	2/17
1SL0283A00	Gemini	0,34	2/13
1SL0284A00	Gemini	0,745	2/13
1SL0285A00	Gemini	1,092	2/13
1SL0286A00	Gemini	1,43	2/13
1SL0287A00	Gemini	2,66	2/13
1SL0290A00	Gemini	0,18	2/13
1SL0291A00	Gemini	0,23	2/13
1SL0292A00	Gemini	0,3	2/13
1SL0293A00	Gemini	0,45	2/13
1SL0296A00	Gemini	0,483	2/15
1SL0297A00	Gemini	0,7	2/15
1SL0298A00	Gemini	0,975	2/15
1SL0299A00	Gemini	1,5	2/15
1SL0302A00	Gemini	1,5	2/15
1SL0302A00	Gemini	1,5	2/15
1SL0303A00	Gemini	2,05	2/15
1SL0303A00	Gemini	2,05	2/15
1SL0304A00	Gemini	3,1	2/15
1SL0304A00	Gemini	3,1	2/15
1SL0307A00	Gemini	0,345	2/13
1SL0308A00	Gemini	0,482	2/13
1SL0309A00	Gemini	0,56	2/13
1SL0310A00	Gemini	0,95	2/13
1SL0313A00	Gemini	0,6	2/13

Code	Structure	Weight Kg.	Page
1SL0314A00	Gemini	0,812	2/13
1SL0315A00	Gemini	1,15	2/13
1SL0324A00	Gemini	0,175	2/15
1SL0325A00	Gemini	0,256	2/15
1SL0326A00	Gemini	0,14	2/15
1SL0327A00	Gemini	0,45	2/15
1SL0330A00	Gemini	0,316	2/15
1SL0331A00	Gemini	0,408	2/15
1SL0332A00	Gemini	0,612	2/15
1SL0333A00	Gemini	0,837	2/15
1SL0336A00	Gemini	0,965	2/14
1SL0337A00	Gemini	1,25	2/14
1SL0338A00	Gemini	1,9	2/14
1SL0339A00	Gemini	0,01	2/19
1SL0340A00	Gemini	0,044	2/19
1SL0341A00	Gemini	0,012	2/19
1SL0342A00	Gemini	0,0685	2/19
1SL0343A00	Gemini	0,625	2/19
1SL0344A00	Gemini	0,8325	2/19
1SL0345A00	Gemini	1,75	2/19
1SL0346A00	Gemini	2,275	2/19
1SL0351A00	Gemini	0,033	2/22
1SL0352A00	Gemini	5,85	2/19
1SL0353A00	Gemini	0,19	2/16
1SL0354A00	Gemini	0,2	2/16
1SL0355A00	Gemini	0,25	2/16
1SL0356A00	Gemini	0,337	2/16
1SL0360A00	Gemini	0,15	2/16
1SL0361A00	Gemini	0,2125	2/16
1SL0362A00	Gemini	0,23	2/16
1SL0363A00	Gemini	0,375	2/16
1SL0370A00	Gemini	1,875	2/14
1SL0371A00	Gemini	2,7	2/14
1SL0372A00	Gemini	3,85	2/14
1SL0373A00	Gemini	0,965	2/14
1SL0374A00	Gemini	1,25	2/14
1SL0375A00	Gemini	1,9	2/14
1SL0376A00	Gemini	1,875	2/14
1SL0377A00	Gemini	2,7	2/14
1SL0378A00	Gemini	3,85	2/14
1SL0380A00	Gemini	0,048	2/22
1SL0381A00	Gemini	0	2/22
1SL0382A00	Gemini	0,026	2/22
1SL0383A00	Gemini	0,108	2/17

Code	Structure	Weight Kg.	Page
1SL0384A00	Gemini	0,006	2/22
1SL0385A00	Gemini	0,316	2/19
1SL0386A00	Gemini	0,601	2/19
1SL0387A00	Gemini	0,764	2/19
1SL0388A00	Gemini	0,959	2/19
1SL0389A00	Gemini	1,91	2/19
1SL0390A00	Gemini	2,495	2/19
1SL0397A00	Gemini	0,038	2/22
1SL0401A00	Gemini	0,625	2/19
1SL0413A00	Gemini	0,825	2/20
1SL0414A00	Gemini	0,875	2/20
1SL0415A00	Gemini	1,24	2/20
1SL0416A00	Gemini	1,85	2/20
1SL0423A00	Gemini	0,8	2/20
1SL0424A00	Gemini	0,825	2/20
1SL0425A00	Gemini	1,15	2/20
1SL0426A00	Gemini	1,83	2/20
1SL0433A00	Gemini	2,265	2/21
1SL0434A00	Gemini	2,775	2/21
1SL0435A00	Gemini	3,29	2/21
1SL0436A00	Gemini	4,58	2/21
1SL0451A00	Gemini	0,482	2/21
1SL0452A00	Gemini	0,765	2/21
1SL0454A00	Gemini	0,985	2/21
1SL0455A00	Gemini	1,825	2/21
1SL0456A00	Gemini	2,13	2/21
1SL0457A00	Gemini	0,0105	2/22
1SL0458A00	Gemini	0,089	2/19
1SL0459A00	Gemini	0,017	2/19
1SL0464A00	Gemini	11,8	2/20
1SL0465A00	Gemini	13,6	2/20
1SL0466A00	Gemini	16,2	2/20
1SL0470A00	Gemini	1,35	2/22
1SL0471A00	Gemini	2	2/22
1SL0472A00	Gemini	3,05	2/22
1SL0473A00	Gemini	3,35	2/22
ED0025	Gemini	11555	2/18
ED0026	Gemini	8000	2/18
ED2944	Gemini	2154	2/18
ED2951	Gemini	3336	2/18
ED2961	Gemini	0,4	2/18
ED2962	Gemini	0,6	2/18
ED2969	Gemini	4,5	2/18
ED2977	Gemini	6700	2/18

Code	Structure	Weight Kg.	Page
ED2993	Gemini	1645	2/18
ED3009	Gemini	2316	2/18
ED3017	Gemini	2850	2/18
ED3025	Gemini	4050	2/18
ED3033	Gemini	510	2/18
ED3041	Gemini	435	2/18
ED3058	Gemini	384	2/18
ED3066	Gemini	509	2/18
ED3082	Gemini	1480	2/18
ED3090	Gemini	3360	2/18
ED3101	Gemini	0,3	2/18
ED3102	Gemini	0,3	2/18
ED3103	Gemini	0,3	2/18
ED3104	Gemini	0,3	2/18
ED3108	Gemini	300	2/18
ED3116	Gemini	350	2/18
ED3124	Gemini	498	2/18
ED3132	Gemini	1977	2/18
ED3272	Gemini	607	2/18
ED3280	Gemini	608	2/18
ED3298	Gemini	574	2/18
ED3355	Gemini	400	2/18
ED3363	Gemini	500	2/18
ED3371	Gemini	600	2/18
ED3405	Gemini	3700	2/18
ED3413	Gemini	4800	2/18
ED3439	Gemini	7800	2/18
EN0105K	Gemini	0,09	2/21
EN0150K	Gemini	0,18	2/21
EN0204K	Gemini	0,3	2/21

Code	Structure	Weight Kg.	Page

ArTu L structures
Order codes

Code	Structure	Weight Kg.	Page
AA1000	ArTu L	0,15	3/46
AA1001	ArTu L	0,15	3/46
AA1560	ArTu L	0,02	3/49
AA1570	ArTu L	0,03	3/49
AA5600	ArTu L	20	3/47
AA6100	ArTu L	0,01	3/49
AA6120	ArTu L	0,01	3/49
AA6140	ArTu L	0,01	3/49
AA6160	ArTu L	0,02	3/49
AA6180	ArTu L	0,02	3/49
AA6200	ArTu L	0,02	3/49
AA8004	ArTu L	0,01	3/49
AD1004	ArTu L	0,55	3/47
AD1005	ArTu L	0,42	3/46
AD1006	ArTu L	0,55	3/47
AD1007	ArTu L	0,25	3/47
AD1009	ArTu L	0,086	3/30
AD1022	ArTu L	0,32	3/49
AD1027	ArTu L	0,69	3/47
AD1027	ArTu L	0,69	3/47
AD1028	ArTu L	0,306	3/47
AD1029	ArTu L	0,41	3/47
AD1030	ArTu L	0,438	3/47
AD1031	ArTu L	0,518	3/47
AD1033	ArTu L	0,22	3/49
AD1034	ArTu L	2	3/47
AD1036	ArTu L	0,07	3/49
AD1038	ArTu L	0,14	3/47
AD1053	ArTu L	2,95	3/47
AD1056	ArTu L	0,3	3/38
AD1058	ArTu L	0,01	3/49
AD1064	ArTu L	0,26	3/38
AD1065	ArTu L	0,2	3/39
AD1068	ArTu L	1,07	3/38
AD1070	ArTu L	0,03	3/49
AD1075	ArTu L	0,55	3/47
AD1076	ArTu L	0,25	3/47
AD1077	ArTu L	1,05	3/38
AD1080	ArTu L	0,25	3/47
AD1081	ArTu L	0,25	3/47
AD1083	ArTu L	0,25	3/47
AD1086	ArTu L	3,51	3/32
AD1088	ArTu L	1,41	3/32
AD1089	ArTu L	2,08	3/32

Code	Structure	Weight Kg.	Page
AD1090	ArTu L	0,51	3/49
AD1091	ArTu L	0,33	3/49
AD1096	ArTu L	0,15	3/30
AD1097	ArTu L	0,56	3/30
AD1097	ArTu L	0,56	3/43
AD1098	ArTu L	0,96	3/30
AD1099	ArTu L	0,61	3/46
AD1101	ArTu L	0,05	3/32
AD1102	ArTu L	0,02	3/32
AD1103	ArTu L	0,02	3/32
AD1104	ArTu L	0,02	3/32
AD1600	ArTu L	0,24	3/32
AD1800	ArTu L	0,36	3/32
AD3301	ArTu L	0,15	3/49
AD3302	ArTu L	0,15	3/49
AD3303	ArTu L	0,15	3/49
AD3304	ArTu L	0,15	3/49
AL1000	ArTu L	0,18	3/46
AL1001	ArTu L	1,35	3/46
AL2000	ArTu L	0,12	3/46
AP6000	ArTu L	0,01	3/30
BA0400	ArTu L	3,3	3/38
BA0800	ArTu L	4,5	3/38
BF1602	ArTu L	2,7	3/41
BF2502	ArTu L	4,2	3/41
BF4002	ArTu L	3	3/41
BF4012	ArTu L	6,5	3/41
BP0630	ArTu L	0,4	3/40
BP0632	ArTu L	0,55	3/40
BP0634	ArTu L	0,45	3/40
BR0250	ArTu L	1,3	3/40
BR0400	ArTu L	2,8	3/40
BR0630	ArTu L	6,2	3/40
ED0001	ArTu L	0,22	3/44
ED0002	ArTu L	0,28	3/44
ED0003	ArTu L	0,29	3/44
ED0004	ArTu L	0,29	3/44
ED0025	ArTu L	11555	3/45
ED0026	ArTu L	8000	3/45
ED2183	ArTu L	3100	3/43
ED2191	ArTu L	4100	3/43
ED2209	ArTu L	1450	3/43
ED2217	ArTu L	2,04	3/44
ED2225	ArTu L	2,1	3/44

Code	Structure	Weight Kg.	Page
ED2233	ArTu L	2,3	3/44
ED2241	ArTu L	1,7	3/44
ED2258	ArTu L	2,4	3/44
ED2266	ArTu L	2,7	3/44
ED2274	ArTu L	2,7	3/44
ED2282	ArTu L	2,196	3/44
ED2290	ArTu L	3	3/44
ED2308	ArTu L	3180	3/44
ED2316	ArTu L	3,48	3/44
ED2324	ArTu L	2,76	3/44
ED2332	ArTu L	3,1	3/44
ED2340	ArTu L	3	3/44
ED2357	ArTu L	2,76	3/44
ED2365	ArTu L	3,48	3/44
ED2373	ArTu L	1,104	3/44
ED2373	ArTu L	1,104	3/44
ED2373	ArTu L	1,104	3/44
ED2381	ArTu L	1,024	3/44
ED2399	ArTu L	0,92	3/44
ED2407	ArTu L	1,56	3/44
ED2531	ArTu L	972	3/43
ED2549	ArTu L	972	3/43
ED2550	ArTu L	880	3/43
ED2551	ArTu L	1600	3/43
ED2552	ArTu L	1540	3/43
ED2553	ArTu L	1540	3/43
ED2554	ArTu L	1540	3/43
ED2556	ArTu L	1037	3/43
ED2557	ArTu L	0	3/43
ED2558	ArTu L	0	3/43
ED2559	ArTu L	0	3/43
ED2560	ArTu L	0	3/43
ED2564	ArTu L	948	3/43
ED2572	ArTu L	1038	3/43
ED2590	ArTu L	972	3/43
ED2598	ArTu L	1068	3/43
ED2606	ArTu L	1156	3/43
ED2654	ArTu L	800	3/43
ED2662	ArTu L	800	3/43
ED2670	ArTu L	972	3/43
ED2720	ArTu L	1198	3/43
ED2738	ArTu L	1203	3/43
ED2746	ArTu L	1287	3/43
ED2753	ArTu L	1166	3/43

Code	Structure	Weight Kg.	Page
ED2845	ArTu L	576	3/44
ED2852	ArTu L	576	3/44
ED2894	ArTu L	900	3/43
ED2902	ArTu L	841	3/43
ED2910	ArTu L	867	3/43
ED2928	ArTu L	915	3/43
ED2936	ArTu L	580	3/44
ED2944	ArTu L	2154	3/45
ED2951	ArTu L	3336	3/45
ED2961	ArTu L	0,4	3/45
ED2962	ArTu L	0,6	3/45
ED2969	ArTu L	4,5	3/45
ED2977	ArTu L	6700	3/45
ED2985	ArTu L	1137	3/45
ED2993	ArTu L	1645	3/45
ED3009	ArTu L	2316	3/45
ED3017	ArTu L	2850	3/45
ED3025	ArTu L	4050	3/45
ED3033	ArTu L	510	3/45
ED3041	ArTu L	435	3/45
ED3058	ArTu L	384	3/45
ED3066	ArTu L	509	3/45
ED3082	ArTu L	1480	3/45
ED3090	ArTu L	3360	3/45
ED3101	ArTu L	0,3	3/45
ED3102	ArTu L	0,3	3/45
ED3103	ArTu L	0,3	3/45
ED3104	ArTu L	0,3	3/45
ED3108	ArTu L	300	3/45
ED3116	ArTu L	350	3/45
ED3124	ArTu L	498	3/45
ED3132	ArTu L	1977	3/45
ED3272	ArTu L	607	3/45
ED3280	ArTu L	608	3/45
ED3298	ArTu L	574	3/45
ED3355	ArTu L	400	3/45
ED3363	ArTu L	500	3/45
ED3371	ArTu L	600	3/45
ED3405	ArTu L	3700	3/45
ED3413	ArTu L	4800	3/45
ED3439	ArTu L	7800	3/45
EV1008	ArTu L	0,04	3/49
EV1036	ArTu L	0,04	3/49
EV1037	ArTu L	0,04	3/49

Code	Structure	Weight Kg.	Page
EV1039	ArTu L	0,04	3/49
EV1050	ArTu L	6,88	3/48
EV1051	ArTu L	1	3/48
EV1056	ArTu L	0,328	3/48
EV1058	ArTu L	0,576	3/48
EV1090	ArTu L	0,456	3/48
EV1091	ArTu L	0,88	3/48
EV1092	ArTu L	0,55	3/48
EV1093	ArTu L	0,55	3/48
EV1110	ArTu L	2,74	3/46
EV1112	ArTu L	2,74	3/46
EV1113	ArTu L	0,125	3/46
EV1119	ArTu L	3,6	3/41
EV1120	ArTu L	4,5	3/41
EV1121	ArTu L	8,85	3/41
EV1122	ArTu L	2,44	3/41
EV1123	ArTu L	2,49	3/41
EV1124	ArTu L	2,77	3/41
EV1125	ArTu L	2,77	3/41
EV1135	ArTu L	0,24	3/32
EV1136	ArTu L	0,16	3/32
EV1150	ArTu L	0,1	3/48
EV1151	ArTu L	0,1	3/48
EV1152	ArTu L	0,1	3/48
EV1153	ArTu L	0,1	3/48
EV1154	ArTu L	0,1	3/48
EV1155	ArTu L	0,01	3/48
EV1156	ArTu L	0,07	3/48
EV2110	ArTu L	0,558	3/46
EV2112	ArTu L	0,558	3/46
GD1512	ArTu L	0,72	3/30
GD1520	ArTu L	0,8	3/30
GD1520	ArTu L	0,8	3/45
GD1530	ArTu L	1,79	3/30
GD1530	ArTu L	1,79	3/45
IP0600	ArTu L	0,43	3/28
IP0601	ArTu L	0,89	3/28
IP0602	ArTu L	0,44	3/28
IP0603	ArTu L	0,29	3/28
IP0604	ArTu L	1,25	3/28
IP0800	ArTu L	0,57	3/28
IP0801	ArTu L	0,39	3/28
IP1000	ArTu L	0,71	3/28
IP1001	ArTu L	0,49	3/28

Code	Structure	Weight Kg.	Page
IP1200	ArTu L	0,85	3/28
IP1201	ArTu L	0,58	3/28
IP1400	ArTu L	0,99	3/28
IP1401	ArTu L	0,68	3/28
IP1600	ArTu L	1,13	3/28
IP1601	ArTu L	0,78	3/28
IP1800	ArTu L	1,28	3/28
IP1801	ArTu L	0,88	3/28
IP2000	ArTu L	1,37	3/28
IP2001	ArTu L	0,96	3/28
KB1001	ArTu L	0,5	3/42
KB1002	ArTu L	0,95	3/42
KB1006	ArTu L	0,75	3/42
KB1010	ArTu L	0,6	3/42
KB1014	ArTu L	0,76	3/42
KB1018	ArTu L	0,64	3/42
KB1019	ArTu L	3,59	3/42
KB1020	ArTu L	4,59	3/42
KB1021	ArTu L	5,25	3/42
KB1022	ArTu L	5,59	3/42
KB1024	ArTu L	6,59	3/42
KO1260	ArTu L	4,78	3/33
KO1261	ArTu L	4,78	3/33
KO1262	ArTu L	3,08	3/33
KO1280	ArTu L	6,59	3/33
KO1281	ArTu L	6,59	3/33
LF1400	ArTu L	10,17	3/24
LF1600	ArTu L	11,61	3/24
LF1800	ArTu L	13,05	3/24
LF2000	ArTu L	14,5	3/24
LK1000	ArTu L	3,39	3/35
LK1001	ArTu L	3,39	3/36
LK1002	ArTu L	2,64	3/37
LK1004	ArTu L	3,39	3/35
LK1008	ArTu L	4,03	3/37
LK1100	ArTu L	4,52	3/35
LK1101	ArTu L	4,52	3/37
LK1104	ArTu L	4,76	3/35
LK2000	ArTu L	3,44	3/35
LK2001	ArTu L	3,39	3/36
LK2002	ArTu L	2,64	3/37
LK2004	ArTu L	3,39	3/35
LK2008	ArTu L	4,11	3/37
LK2100	ArTu L	4,58	3/35

ArTu L structures
Order codes

Code	Structure	Weight Kg.	Page
LK2101	ArTu L	4,62	3/37
LK2104	ArTu L	4,85	3/35
LK3000	ArTu L	3,45	3/35
LK3001	ArTu L	3,39	3/36
LK3002	ArTu L	3,28	3/37
LK3003	ArTu L	3,58	3/37
LK3004	ArTu L	5,09	3/35
LK3005	ArTu L	5,09	3/36
LK3008	ArTu L	1,82	3/37
LK3101	ArTu L	6,79	3/37
LK3102	ArTu L	9,23	3/37
LK3104	ArTu L	6,79	3/35
LK3105	ArTu L	9,23	3/37
LK3110	ArTu L	4,6	3/35
LK3111	ArTu L	4,68	3/37
LK3200	ArTu L	3,51	3/36
LK3300	ArTu L	4,57	3/36
LK3301	ArTu L	3,66	3/35
LK4003	ArTu L	3,28	3/35
LK4004	ArTu L	3,28	3/35
LK4005	ArTu L	6,43	3/36
LK4006	ArTu L	7,26	3/36
LK4007	ArTu L	4,11	3/37
LK4100	ArTu L	3,44	3/36
LK4103	ArTu L	4,37	3/35
LK4104	ArTu L	4,37	3/35
LK4105	ArTu L	8,75	3/37
LK4106	ArTu L	9,69	3/37
LK4108	ArTu L	4,58	3/37
LK5003	ArTu L	4,51	3/35
LK5004	ArTu L	4,51	3/35
LK5005	ArTu L	6,53	3/36
LK5006	ArTu L	7,11	3/36
LK5007	ArTu L	4,11	3/37
LK5008	ArTu L	3,47	3/37
LK5103	ArTu L	6,01	3/35
LK5104	ArTu L	5,76	3/35
LK5105	ArTu L	8,7	3/37
LK5106	ArTu L	9,69	3/37
LK6011	ArTu L	7,09	3/36
LK6012	ArTu L	9,45	3/37
LX1000	ArTu L	2,7	3/35
LX1001	ArTu L	2,672	3/36
LX1002	ArTu L	2,64	3/37
LX1005	ArTu L	2,672	3/35
LX1006	ArTu L	3,561	3/36
LX1008	ArTu L	4,03	3/37

Code	Structure	Weight Kg.	Page
LX1100	ArTu L	3,819	3/35
LX1101	ArTu L	3,963	3/37
LX1104	ArTu L	4,76	3/35
LX1108	ArTu L	5,427	3/37
LX2000	ArTu L	2,672	3/35
LX2001	ArTu L	3,61	3/36
LX2002	ArTu L	3,048	3/37
LX2004	ArTu L	2,518	3/35
LX2008	ArTu L	3,55	3/37
LX2101	ArTu L	5,022	3/37
LX2300	ArTu L	3,048	3/37
LX3000	ArTu L	2,642	3/35
LX3001	ArTu L	3,282	3/36
LX3002	ArTu L	3,28	3/37
LX3003	ArTu L	2,429	3/37
LX3004	ArTu L	3,648	3/35
LX3005	ArTu L	3,603	3/36
LX3008	ArTu L	1,82	3/37
LX3101	ArTu L	4,977	3/37
LX3104	ArTu L	6,79	3/35
LX3105	ArTu L	9,23	3/37
LX3110	ArTu L	3,788	3/35
LX3200	ArTu L	3,65	3/36
LX3300	ArTu L	4,57	3/36
LX4003	ArTu L	2,63	3/35
LX4004	ArTu L	3,28	3/35
LX4005	ArTu L	3,248	3/36
LX4006	ArTu L	7,26	3/36
LX4007	ArTu L	4,11	3/37
LX4008	ArTu L	4,25	3/36
LX4100	ArTu L	3,158	3/36
MC0600	ArTu L	3,69	3/22
MC0800	ArTu L	4,92	3/22
MC1000	ArTu L	6,15	3/22
MC1200	ArTu L	7,38	3/22
MC1400	ArTu L	8,61	3/24
MC1600	ArTu L	9,85	3/24
MC1800	ArTu L	11,09	3/24
MC2000	ArTu L	12,32	3/24
MI0600	ArTu L	1,67	3/22
MI0800	ArTu L	2,23	3/22
MI1000	ArTu L	2,79	3/22
MI1200	ArTu L	3,34	3/22
MI1400	ArTu L	3,9	3/23
MI1600	ArTu L	4,45	3/23
MI1800	ArTu L	5,02	3/23
MI2000	ArTu L	5,57	3/23

Code	Structure	Weight Kg.	Page
PA1600	ArTu L	2,6	3/34
PA2600	ArTu L	2,94	3/34
PB0802	ArTu L	0,66	3/38
PB0803	ArTu L	0,4	3/38
PC0300	ArTu L	1,49	3/33
PC0580	ArTu L	0,74	3/34
PC0600	ArTu L	3,2	3/33
PC0601	ArTu L	6,16	3/26
PC0602	ArTu L	3,44	3/26
PC0801	ArTu L	8,21	3/26
PC0802	ArTu L	4,59	3/26
PC1001	ArTu L	10,27	3/26
PC1002	ArTu L	5,74	3/26
PC1050	ArTu L	0,45	3/34
PC1150	ArTu L	1,13	3/34
PC1201	ArTu L	12,32	3/26
PC1202	ArTu L	7,18	3/26
PC1401	ArTu L	14,38	3/26
PC1402	ArTu L	8,37	3/26
PC1403	ArTu L	0,38	3/34
PC1436	ArTu L	18,48	3/26
PC1580	ArTu L	2,22	3/34
PC1600	ArTu L	0,96	3/34
PC1601	ArTu L	16,32	3/26
PC1602	ArTu L	9,5	3/26
PC1636	ArTu L	20,98	3/26
PC1660	ArTu L	13,5	3/34
PC1680	ArTu L	18,3	3/34
PC1800	ArTu L	1,27	3/34
PC1801	ArTu L	18,26	3/26
PC1802	ArTu L	10,64	3/26
PC1836	ArTu L	23,53	3/26
PC1860	ArTu L	15	3/34
PC1880	ArTu L	20,25	3/34
PC2001	ArTu L	20,28	3/26
PC2002	ArTu L	11,82	3/26
PC2035	ArTu L	26,07	3/26
PC2060	ArTu L	16,875	3/34
PC2080	ArTu L	22,57	3/34
PC2401	ArTu L	0,61	3/34
PC2600	ArTu L	1,4	3/34
PC2800	ArTu L	2,6	3/34
PC3401	ArTu L	1,04	3/34
PC3600	ArTu L	1,96	3/34
PC3800	ArTu L	3,23	3/34
PC4401	ArTu L	1,36	3/34
PC4600	ArTu L	2,45	3/34

Code	Structure	Weight Kg.	Page
PC4800	ArTu L	4,41	3/34
PC6401	ArTu L	2,05	3/34
PC6600	ArTu L	4,41	3/34
PC6800	ArTu L	6,37	3/34
PC8401	ArTu L	2,67	3/34
PC8600	ArTu L	5,39	3/34
PC8800	ArTu L	8,58	3/34
PF1002	ArTu L	1,45	3/33
PF1003	ArTu L	2,23	3/33
PF1004	ArTu L	3,02	3/33
PF1006	ArTu L	4,58	3/33
PF1008	ArTu L	6,33	3/33
PF1102	ArTu L	1,94	3/33
PF1103	ArTu L	2,98	3/33
PF1104	ArTu L	4,03	3/33
PF1106	ArTu L	6,1	3/33
PF1108	ArTu L	8,44	3/33
PM1500	ArTu L	1,13	3/31
PM1536	ArTu L	1,47	3/31
PM2312	ArTu L	2,93	3/31
PM2315	ArTu L	3,9	3/31
PM2612	ArTu L	0,652	3/31
PM2624	ArTu L	1,2	3/31
PM2624	ArTu L	1,2	3/45
PM2836	ArTu L	2	3/31
PM2836	ArTu L	2	3/45
PM3624	ArTu L	2,87	3/31
PM3624	ArTu L	2,87	3/44
PM3648	ArTu L	2,87	3/31
PM3836	ArTu L	3,82	3/31
PM3836	ArTu L	3,82	3/44
PM3872	ArTu L	3,82	3/31
PM6672	ArTu L	4,41	3/31
PO1431	ArTu L	6,02	3/27
PO1631	ArTu L	12	3/27
PO1831	ArTu L	8	3/27
PO2031	ArTu L	9	3/27
PR2600	ArTu L	1,96	3/34
PR2800	ArTu L	2,74	3/34
PR4401	ArTu L	1,614	3/34
PR4600	ArTu L	3,92	3/34
PR4800	ArTu L	4,12	3/34
PR6600	ArTu L	5,39	3/34
PR6800	ArTu L	6,86	3/34
PS2720	ArTu L	1,27	3/32
PS2728	ArTu L	2,45	3/32
PS2960	ArTu L	1,27	3/32

Code	Structure	Weight Kg.	Page
PS2968	ArTu L	2,45	3/32
PS4720	ArTu L	1,27	3/32
PS4728	ArTu L	2,45	3/32
PS4960	ArTu L	1,3	3/32
PS4968	ArTu L	2,5	3/32
PV0600	ArTu L	6,16	3/25
PV0800	ArTu L	8,21	3/25
PV1000	ArTu L	10,27	3/25
PV1200	ArTu L	12,32	3/25
PV1400	ArTu L	14,38	3/25
PV1400	ArTu L	14,38	3/25
PV1424	ArTu L	19,48	3/25
PV1600	ArTu L	16,32	3/25
PV1600	ArTu L	16,32	3/25
PV1624	ArTu L	22,17	3/25
PV1800	ArTu L	18,26	3/25
PV1800	ArTu L	18,26	3/25
PV1824	ArTu L	24,86	3/25
PV2000	ArTu L	20,29	3/25
PV2000	ArTu L	20,29	3/25
PV2024	ArTu L	27,55	3/25
RC1000	ArTu L	14,41	3/29
RC2000	ArTu L	10,19	3/29
SH0100	ArTu L	1,155	3/28
SH0200	ArTu L	1,419	3/28
SH0208	ArTu L	1,82	3/28
SH0600	ArTu L	0,52	3/27
SH0608	ArTu L	1,26	3/27
SH0700	ArTu L	0,46	3/27
SH0708	ArTu L	1,12	3/27
SH0800	ArTu L	0,69	3/27
SH0808	ArTu L	1,67	3/27
SL0600	ArTu L	9,84	3/22
SL0800	ArTu L	13,12	3/22
SL1000	ArTu L	16,4	3/22
SL1200	ArTu L	19,67	3/22
SL1400	ArTu L	22,49	3/23
SL1408	ArTu L	28,92	3/23
SL1600	ArTu L	24,95	3/23
SL1608	ArTu L	33,05	3/23
SL1800	ArTu L	27,9	3/23
SL1808	ArTu L	37,19	3/23
SL2000	ArTu L	31,1	3/23
SL2008	ArTu L	41,32	3/23
SV0600	ArTu L	1,25	3/27
SV0800	ArTu L	1,66	3/27
SV1000	ArTu L	2,08	3/27

Code	Structure	Weight Kg.	Page
SV1200	ArTu L	2,49	3/27
SV1400	ArTu L	2,91	3/27
SV1600	ArTu L	3,33	3/27
SV1800	ArTu L	3,74	3/27
SV2000	ArTu L	4,16	3/27
TL1000	ArTu L	0,7	3/29
TL1000	ArTu L	0,7	3/39
TL1000	ArTu L	0,7	3/40
TL1100	ArTu L	0,85	3/29
TL1100	ArTu L	0,85	3/39
TL1100	ArTu L	0,85	3/40
TL2000	ArTu L	0,68	3/29
TL2000	ArTu L	0,68	3/39
TL2100	ArTu L	0,82	3/29
TL2100	ArTu L	0,82	3/39
TL3000	ArTu L	0,52	3/29
TL3000	ArTu L	0,52	3/39
TL3000	ArTu L	0,52	3/40
TS4000	ArTu L	2	3/47
TS4001	ArTu L	2,5	3/47
TS4002	ArTu L	2	3/47
TS4003	ArTu L	2	3/47
TS4011	ArTu L	2	3/47
TS4012	ArTu L	2	3/47
TS4013	ArTu L	2	3/47
TU8000	ArTu L	1,35	3/46
VB7035	ArTu L	0,6	3/49
VC0600	ArTu L	5,74	3/22
VC0800	ArTu L	7,65	3/22
VC1000	ArTu L	9,56	3/22
VC1200	ArTu L	11,48	3/22
VC1400	ArTu L	13,39	3/23
VC1425	ArTu L	7,67	3/23
VC1600	ArTu L	14,66	3/23
VC1625	ArTu L	8,77	3/23
VC1800	ArTu L	15,9	3/23
VC1825	ArTu L	9,86	3/23
VC2000	ArTu L	17,66	3/23
VC2025	ArTu L	10,96	3/23
ZL1000	ArTu L	2,48	3/24
ZL1001	ArTu L	1,1	3/24
ZL1101	ArTu L	1,44	3/24
ZL2001	ArTu L	0,66	3/24
ZL3000	ArTu L	1,45	3/24

ArTu M structures
Order codes

Code	Structure	Weight Kg.	Page
AA1206	ArTu M	0	4/41
AA1560	ArTu M	0,02	4/46
AA1570	ArTu M	0,03	4/46
AA5600	ArTu M	20	4/42
AA6100	ArTu M	0,01	4/46
AA6120	ArTu M	0,01	4/46
AA6140	ArTu M	0,01	4/46
AA6160	ArTu M	0,02	4/46
AA6180	ArTu M	0,02	4/46
AA6200	ArTu M	0,02	4/46
AA8004	ArTu M	0,01	4/46
AA9600	ArTu M	0,5	4/41
AD1004	ArTu M	0,55	4/44
AD1006	ArTu M	0,55	4/44
AD1007	ArTu M	0,25	4/44
AD1009	ArTu M	0,086	4/30
AD1012	ArTu M	0,2	4/41
AD1022	ArTu M	0,32	4/47
AD1027	ArTu M	0,69	4/44
AD1027	ArTu M	0,69	4/44
AD1028	ArTu M	0,306	4/44
AD1029	ArTu M	0,41	4/44
AD1030	ArTu M	0,438	4/44
AD1031	ArTu M	0,518	4/44
AD1033	ArTu M	0,22	4/47
AD1034	ArTu M	2	4/44
AD1035	ArTu M	0,12	4/44
AD1036	ArTu M	0,07	4/47
AD1037	ArTu M	0,352	4/30
AD1041	ArTu M	0,34	4/43
AD1044	ArTu M	0,99	4/43
AD1053	ArTu M	2,95	4/44
AD1054	ArTu M	0,9	4/43
AD1055	ArTu M	1,67	4/43
AD1056	ArTu M	0,3	4/34
AD1058	ArTu M	0,01	4/46
AD1061	ArTu M	0,88	4/28
AD1061	ArTu M	0,88	4/38
AD1064	ArTu M	0,26	4/34
AD1065	ArTu M	0,2	4/34
AD1068	ArTu M	1,07	4/34
AD1070	ArTu M	0,03	4/47
AD1075	ArTu M	0,55	4/44
AD1076	ArTu M	0,25	4/44

Code	Structure	Weight Kg.	Page
AD1077	ArTu M	1,05	4/34
AD1080	ArTu M	0,25	4/44
AD1081	ArTu M	0,25	4/44
AD1083	ArTu M	0,25	4/44
AD1086	ArTu M	3,51	4/27
AD1088	ArTu M	1,41	4/27
AD1089	ArTu M	2,08	4/27
AD1090	ArTu M	0,51	4/47
AD1091	ArTu M	0,33	4/47
AD1101	ArTu M	0,05	4/27
AD1102	ArTu M	0,02	4/27
AD1103	ArTu M	0,02	4/27
AD1104	ArTu M	0,02	4/27
AD1600	ArTu M	0,24	4/27
AD1800	ArTu M	0,36	4/27
AD3301	ArTu M	0,15	4/47
AD3302	ArTu M	0,15	4/47
AD3303	ArTu M	0,15	4/47
AD3304	ArTu M	0,15	4/47
AP6000	ArTu M	0,01	4/30
AP6001	ArTu M	0,01	4/30
AZ4000	ArTu M	3,5	4/47
BA0400	ArTu M	3,3	4/34
BA0800	ArTu M	4,5	4/34
BF1602	ArTu M	2,7	4/37
BF2502	ArTu M	4,2	4/37
BF4002	ArTu M	3	4/37
BF4012	ArTu M	6,5	4/37
BP0630	ArTu M	0,4	4/36
BP0632	ArTu M	0,55	4/36
BR0250	ArTu M	1,3	4/36
BR0400	ArTu M	2,8	4/36
BR0630	ArTu M	6,2	4/36
CA1401	ArTu M	1,237	4/47
CA1600	ArTu M	1,571	4/47
CA1800	ArTu M	1,77	4/47
CA2000	ArTu M	1,97	4/47
ED0001	ArTu M	0,22	4/39
ED0002	ArTu M	0,28	4/39
ED0003	ArTu M	0,29	4/39
ED0004	ArTu M	0,29	4/39
ED0025	ArTu M	11555	4/40
ED0026	ArTu M	8000	4/40
ED2183	ArTu M	3100	4/38

Code	Structure	Weight Kg.	Page
ED2191	ArTu M	4100	4/38
ED2209	ArTu M	1450	4/38
ED2217	ArTu M	2,04	4/39
ED2225	ArTu M	2,1	4/39
ED2233	ArTu M	2,3	4/39
ED2241	ArTu M	1,7	4/39
ED2258	ArTu M	2,4	4/39
ED2266	ArTu M	2,7	4/39
ED2274	ArTu M	2,7	4/39
ED2282	ArTu M	2,196	4/39
ED2290	ArTu M	3	4/39
ED2308	ArTu M	3180	4/39
ED2316	ArTu M	3,48	4/39
ED2324	ArTu M	2,76	4/39
ED2332	ArTu M	3,1	4/39
ED2340	ArTu M	3	4/39
ED2357	ArTu M	2,76	4/39
ED2365	ArTu M	3,48	4/39
ED2373	ArTu M	1,104	4/39
ED2373	ArTu M	1,104	4/39
ED2373	ArTu M	1,104	4/39
ED2381	ArTu M	1,024	4/39
ED2399	ArTu M	0,92	4/39
ED2407	ArTu M	1,56	4/39
ED2531	ArTu M	972	4/38
ED2549	ArTu M	972	4/38
ED2550	ArTu M	880	4/38
ED2551	ArTu M	1600	4/38
ED2552	ArTu M	1540	4/38
ED2553	ArTu M	1540	4/38
ED2554	ArTu M	1540	4/38
ED2556	ArTu M	1037	4/38
ED2557	ArTu M	0	4/38
ED2558	ArTu M	0	4/38
ED2559	ArTu M	0	4/38
ED2560	ArTu M	0	4/38
ED2564	ArTu M	948	4/38
ED2572	ArTu M	1038	4/38
ED2590	ArTu M	972	4/38
ED2598	ArTu M	1068	4/38
ED2606	ArTu M	1156	4/38
ED2654	ArTu M	800	4/38
ED2662	ArTu M	800	4/38
ED2670	ArTu M	972	4/38

Code	Structure	Weight Kg.	Page
ED2720	ArTu M	1198	4/38
ED2738	ArTu M	1203	4/38
ED2746	ArTu M	1287	4/38
ED2753	ArTu M	1166	4/38
ED2845	ArTu M	576	4/39
ED2852	ArTu M	576	4/39
ED2894	ArTu M	900	4/38
ED2902	ArTu M	841	4/38
ED2910	ArTu M	867	4/38
ED2928	ArTu M	915	4/38
ED2936	ArTu M	580	4/39
ED2944	ArTu M	2154	4/40
ED2951	ArTu M	3336	4/40
ED2961	ArTu M	0,4	4/40
ED2962	ArTu M	0,6	4/40
ED2969	ArTu M	4,5	4/40
ED2977	ArTu M	6700	4/40
ED2985	ArTu M	1137	4/40
ED2993	ArTu M	1645	4/40
ED3009	ArTu M	2316	4/40
ED3017	ArTu M	2850	4/40
ED3025	ArTu M	4050	4/40
ED3033	ArTu M	510	4/40
ED3041	ArTu M	435	4/40
ED3058	ArTu M	384	4/40
ED3066	ArTu M	509	4/40
ED3082	ArTu M	1480	4/40
ED3090	ArTu M	3360	4/40
ED3101	ArTu M	0,3	4/40
ED3102	ArTu M	0,3	4/40
ED3103	ArTu M	0,3	4/40
ED3104	ArTu M	0,3	4/40
ED3108	ArTu M	300	4/40
ED3116	ArTu M	350	4/40
ED3124	ArTu M	498	4/40
ED3132	ArTu M	1977	4/40
ED3272	ArTu M	607	4/40
ED3280	ArTu M	608	4/40
ED3298	ArTu M	574	4/40
ED3355	ArTu M	400	4/40
ED3363	ArTu M	500	4/40
ED3371	ArTu M	600	4/40
ED3405	ArTu M	3700	4/40
ED3413	ArTu M	4800	4/40

Code	Structure	Weight Kg.	Page
ED3439	ArTu M	7800	4/40
EV1008	ArTu M	0,04	4/46
EV1036	ArTu M	0,04	4/46
EV1037	ArTu M	0,04	4/46
EV1039	ArTu M	0,04	4/46
EV1050	ArTu M	6,88	4/45
EV1051	ArTu M	1	4/45
EV1056	ArTu M	0,328	4/45
EV1058	ArTu M	0,576	4/45
EV1090	ArTu M	0,456	4/45
EV1091	ArTu M	0,88	4/45
EV1092	ArTu M	0,55	4/45
EV1093	ArTu M	0,55	4/45
EV1110	ArTu M	2,74	4/43
EV1112	ArTu M	2,74	4/43
EV1113	ArTu M	0,125	4/43
EV1119	ArTu M	3,6	4/37
EV1120	ArTu M	4,5	4/37
EV1121	ArTu M	8,85	4/37
EV1122	ArTu M	2,44	4/37
EV1123	ArTu M	2,49	4/37
EV1124	ArTu M	2,77	4/37
EV1125	ArTu M	2,77	4/37
EV1135	ArTu M	0,24	4/27
EV1136	ArTu M	0,16	4/27
EV1150	ArTu M	0,1	4/45
EV1151	ArTu M	0,1	4/45
EV1152	ArTu M	0,1	4/45
EV1153	ArTu M	0,1	4/45
EV1154	ArTu M	0,1	4/45
EV1155	ArTu M	0,01	4/45
EV1156	ArTu M	0,07	4/45
EV2110	ArTu M	0,558	4/43
EV2112	ArTu M	0,558	4/43
FR2601	ArTu M	5	4/30
FR2801	ArTu M	6	4/30
FR4601	ArTu M	10,5	4/30
FR4801	ArTu M	11,5	4/30
GC6002	ArTu M	1	4/28
GC8002	ArTu M	1	4/28
GD1520	ArTu M	0,8	4/40
GD1530	ArTu M	1,79	4/40
GD6002	ArTu M	1	4/28
GD6008	ArTu M	2,4	4/28

Code	Structure	Weight Kg.	Page
GD6009	ArTu M	2,4	4/28
GD6010	ArTu M	1,6	4/28
GD8002	ArTu M	1	4/28
GD8010	ArTu M	1,9	4/28
IP3031	ArTu M	0,7	4/26
IP3061	ArTu M	0,7	4/26
IP3081	ArTu M	0,7	4/26
IP3140	ArTu M	0,7	4/26
IP3142	ArTu M	0,7	4/26
IP3160	ArTu M	0,7	4/26
IP3162	ArTu M	0,7	4/26
IP3181	ArTu M	0,7	4/26
IP3183	ArTu M	0,7	4/26
IP3201	ArTu M	0,7	4/26
IP3203	ArTu M	0,7	4/26
KL2103	ArTu M	5,1	4/32
KL3103	ArTu M	7,1	4/32
KL3113	ArTu M	4,95	4/32
KL3613	ArTu M	4,594	4/32
KL4115	ArTu M	6,55	4/32
KL4116	ArTu M	3,93	4/32
KL5102	ArTu M	15,42	4/33
KL5114	ArTu M	9,22	4/32
KL5116	ArTu M	5,9	4/32
KL5212	ArTu M	12,25	4/33
KL6113	ArTu M	12,71	4/32
KL6213	ArTu M	12,71	4/33
KO2260	ArTu M	6,31	4/33
KO2261	ArTu M	6,31	4/33
KO2280	ArTu M	8,18	4/33
KO2281	ArTu M	8,18	4/33
KT1102	ArTu M	4	4/32
KT1117	ArTu M	3,89	4/32
KT2102	ArTu M	4	4/32
KT2117	ArTu M	3,89	4/32
KT3102	ArTu M	5,6	4/32
KT3112	ArTu M	3,9	4/32
KT3118	ArTu M	3,13	4/32
KT3212	ArTu M	5,6	4/33
KT4102	ArTu M	11,56	4/33
KT4110	ArTu M	2,95	4/32
KT4112	ArTu M	2,8	4/32
KT4212	ArTu M	9,25	4/33
KT5102	ArTu M	11,42	4/33

ArTu M structures
Order codes

Code	Structure	Weight Kg.	Page
KT5110	ArTu M	4,43	4/32
KT5112	ArTu M	5,8	4/32
KT5212	ArTu M	8,25	4/33
KT6113	ArTu M	9,53	4/32
KT6213	ArTu M	9,53	4/33
KX1602	ArTu M	3,702	4/32
KX1603	ArTu M	5,64	4/33
KX1604	ArTu M	5,64	4/33
KX1617	ArTu M	3,663	4/32
KX1618	ArTu M	5,64	4/33
KX2602	ArTu M	3,539	4/32
KX2604	ArTu M	4,25	4/33
KX2619	ArTu M	3,592	4/32
KX3602	ArTu M	5,6	4/32
KX3603	ArTu M	7,1	4/32
KX3609	ArTu M	5,64	4/33
KX3612	ArTu M	3,596	4/32
KX3614	ArTu M	5,6	4/33
KX3618	ArTu M	3,13	4/32
KX4602	ArTu M	11,56	4/33
KX4604	ArTu M	5,45	4/33
KX4610	ArTu M	2,95	4/32
KX4612	ArTu M	3,539	4/32
KX4614	ArTu M	4,899	4/33
KX4615	ArTu M	6,55	4/32
LF1425	ArTu M	9,5	4/23
LF1625	ArTu M	10,8	4/23
LF1825	ArTu M	12	4/23
LF2025	ArTu M	13,5	4/23
PA1600	ArTu M	2,6	4/31
PA2600	ArTu M	2,94	4/31
PB0802	ArTu M	0,66	4/34
PB0803	ArTu M	0,4	4/34
PC1600	ArTu M	0,96	4/31
PC1660	ArTu M	13,5	4/31
PC1680	ArTu M	18,3	4/31
PC1800	ArTu M	1,27	4/31
PC1860	ArTu M	15	4/31
PC1880	ArTu M	20,25	4/31
PC2060	ArTu M	16,875	4/31
PC2080	ArTu M	22,57	4/31
PC2600	ArTu M	1,4	4/31
PC2800	ArTu M	2,6	4/31
PC3600	ArTu M	1,96	4/31

Code	Structure	Weight Kg.	Page
PC3800	ArTu M	3,23	4/31
PC4600	ArTu M	2,45	4/31
PC4800	ArTu M	4,41	4/31
PC6600	ArTu M	4,41	4/31
PC6800	ArTu M	6,37	4/31
PC8600	ArTu M	5,39	4/31
PC8800	ArTu M	8,58	4/31
PF2610	ArTu M	2,5	4/30
PF2810	ArTu M	3,6	4/30
PF4610	ArTu M	4,5	4/30
PF4810	ArTu M	7,5	4/30
PM2312	ArTu M	2,93	4/29
PM2315	ArTu M	3,9	4/29
PM2624	ArTu M	1,2	4/29
PM2624	ArTu M	1,2	4/40
PM2836	ArTu M	2	4/29
PM2836	ArTu M	2	4/40
PM3624	ArTu M	2,87	4/29
PM3624	ArTu M	2,87	4/39
PM3648	ArTu M	2,87	4/29
PM3836	ArTu M	3,82	4/29
PM3836	ArTu M	3,82	4/39
PM3872	ArTu M	3,82	4/29
PM6672	ArTu M	4,41	4/29
PO1060	ArTu M	12	4/25
PO1260	ArTu M	13	4/25
PO1460	ArTu M	15,5	4/25
PO1630	ArTu M	14	4/25
PO1631	ArTu M	12	4/23
PO1660	ArTu M	17,5	4/25
PO1680	ArTu M	22	4/25
PO1830	ArTu M	13	4/25
PO1831	ArTu M	8	4/23
PO1860	ArTu M	19	4/25
PO1880	ArTu M	23	4/25
PO2030	ArTu M	14	4/25
PO2031	ArTu M	9	4/23
PO2060	ArTu M	22	4/25
PO2080	ArTu M	26	4/25
PO6060	ArTu M	7,5	4/25
PO6069	ArTu M	10	4/47
PO8060	ArTu M	10	4/25
PR2600	ArTu M	1,96	4/31
PR2800	ArTu M	2,74	4/31

Code	Structure	Weight Kg.	Page
PR4600	ArTu M	3,92	4/31
PR4800	ArTu M	4,12	4/31
PR6600	ArTu M	5,39	4/31
PR6800	ArTu M	6,86	4/31
PS2720	ArTu M	1,27	4/27
PS2728	ArTu M	2,45	4/27
PS2960	ArTu M	1,27	4/27
PS2968	ArTu M	2,45	4/27
PS4720	ArTu M	1,27	4/27
PS4728	ArTu M	2,45	4/27
PS4960	ArTu M	1,3	4/27
PS4968	ArTu M	2,5	4/27
PV1060	ArTu M	10,5	4/24
PV1260	ArTu M	12	4/24
PV1460	ArTu M	15	4/24
PV1660	ArTu M	17	4/24
PV1680	ArTu M	21,5	4/24
PV1688	ArTu M	32	4/24
PV1860	ArTu M	19,5	4/24
PV1880	ArTu M	24,2	4/24
PV1888	ArTu M	35	4/24
PV2060	ArTu M	21,5	4/24
PV2080	ArTu M	27	4/24
PV2088	ArTu M	38	4/24
PV4060	ArTu M	7	4/47
PV6060	ArTu M	7	4/24
PV8060	ArTu M	9	4/24
SA1350	ArTu M	2,2	4/41
SH6001	ArTu M	2,7	4/42
SH8001	ArTu M	3,7	4/42
SM1462	ArTu M	40,96	4/22
SM1662	ArTu M	44,69	4/22
SM1682	ArTu M	45,18	4/22
SM1862	ArTu M	48,51	4/22
SM1882	ArTu M	49	4/22
SM2062	ArTu M	52,43	4/22
SM2082	ArTu M	52,82	4/22
TR2001	ArTu M	0,22	4/42
TR3001	ArTu M	0,78	4/35
TR3001	ArTu M	0,78	4/42
TS4000	ArTu M	2	4/43
TS4001	ArTu M	2,5	4/43
TS4002	ArTu M	2	4/43
TS4003	ArTu M	2	4/43

Code	Structure	Weight Kg.	Page
TS4011	ArTu M	2	4/43
TS4012	ArTu M	2	4/43
TS4013	ArTu M	2	4/43
TV2000	ArTu M	0,47	4/35
TV2000	ArTu M	0,47	4/42
TV6200	ArTu M	0,46	4/35
TV6200	ArTu M	0,46	4/35
TV6200	ArTu M	0,46	4/36
TV8200	ArTu M	0,75	4/35
TV8200	ArTu M	0,75	4/35
TV8200	ArTu M	0,75	4/36
TV8200	ArTu M	0,75	4/36
VB7035	ArTu M	0,6	4/47
VB7035	ArTu M	0,6	4/47
VC1622	ArTu M	15	4/22
VC1632	ArTu M	20,58	4/23
VC1822	ArTu M	16	4/22
VC1832	ArTu M	22,54	4/23
VC2022	ArTu M	18	4/22
VC2032	ArTu M	29,4	4/23
ZD2325	ArTu M	3,8	4/47
ZD2625	ArTu M	8,5	4/47
ZD2825	ArTu M	10	4/47

Code	Structure	Weight Kg.	Page

Code	Structure	Weight Kg.	Page

ArTu K structures
Order codes

Code	Structure	Weight Kg.	Page
AA1560	ArTu K	0,02	5/106
AA1570	ArTu K	0,03	5/106
AA5600	ArTu K	20	5/103
AA6100	ArTu K	0,01	5/106
AA6120	ArTu K	0,01	5/106
AA6140	ArTu K	0,01	5/106
AA6160	ArTu K	0,02	5/106
AA6180	ArTu K	0,02	5/106
AA6200	ArTu K	0,02	5/106
AA8004	ArTu K	0,01	5/106
AA9600	ArTu K	0,5	5/98
AD1001	ArTu K	0,2	5/107
AD1004	ArTu K	0,55	5/104
AD1006	ArTu K	0,55	5/104
AD1007	ArTu K	0,25	5/104
AD1009	ArTu K	0,086	5/66
AD1014	ArTu K	0,5	5/98
AD1015	ArTu K	0,2	5/103
AD1022	ArTu K	0,32	5/107
AD1024	ArTu K	5,5	5/87
AD1025	ArTu K	6	5/87
AD1027	ArTu K	0,69	5/104
AD1027	ArTu K	0,69	5/104
AD1028	ArTu K	0,306	5/104
AD1029	ArTu K	0,41	5/104
AD1030	ArTu K	0,438	5/104
AD1031	ArTu K	0,518	5/104
AD1033	ArTu K	0,22	5/107
AD1034	ArTu K	2	5/104
AD1035	ArTu K	0,12	5/104
AD1036	ArTu K	0,07	5/107
AD1037	ArTu K	0,352	5/66
AD1041	ArTu K	0,34	5/103
AD1042	ArTu K	0,2	5/87
AD1047	ArTu K	0,2	5/107
AD1048	ArTu K	0,2	5/107
AD1049	ArTu K	2,45	5/78
AD1050	ArTu K	2,45	5/78
AD1051	ArTu K	2,94	5/78
AD1053	ArTu K	2,95	5/104
AD1054	ArTu K	0,9	5/103
AD1055	ArTu K	1,67	5/103
AD1056	ArTu K	0,3	5/88
AD1057	ArTu K	28	5/107

Code	Structure	Weight Kg.	Page
AD1058	ArTu K	0,01	5/106
AD1061	ArTu K	0,88	5/63
AD1061	ArTu K	0,88	5/95
AD1063	ArTu K	4,16	5/89
AD1064	ArTu K	0,26	5/88
AD1065	ArTu K	0,2	5/89
AD1066	ArTu K	0,096	5/89
AD1067	ArTu K	0,2	5/89
AD1068	ArTu K	1,07	5/89
AD1069	ArTu K	2,4	5/89
AD1070	ArTu K	0,03	5/107
AD1071	ArTu K	0,25	5/88
AD1072	ArTu K	0,32	5/88
AD1073	ArTu K	6,55	5/89
AD1075	ArTu K	0,55	5/104
AD1076	ArTu K	0,25	5/104
AD1077	ArTu K	1,05	5/89
AD1078	ArTu K	6,38	5/89
AD1080	ArTu K	0,25	5/104
AD1081	ArTu K	0,25	5/104
AD1083	ArTu K	0,25	5/104
AD1086	ArTu K	3,51	5/65
AD1088	ArTu K	1,41	5/65
AD1089	ArTu K	2,08	5/65
AD1090	ArTu K	0,51	5/107
AD1091	ArTu K	0,33	5/107
AD1092	ArTu K	1,62	5/107
AD1101	ArTu K	0,05	5/65
AD1102	ArTu K	0,02	5/65
AD1103	ArTu K	0,02	5/65
AD1104	ArTu K	0,02	5/65
AD1600	ArTu K	0,24	5/65
AD1800	ArTu K	0,36	5/65
AD1808	ArTu K	0,18	5/98
AD3301	ArTu K	0,15	5/107
AD3302	ArTu K	0,15	5/107
AD3303	ArTu K	0,15	5/107
AD3304	ArTu K	0,15	5/107
AP6000	ArTu K	0,01	5/66
AP6001	ArTu K	0,01	5/66
AZ4000	ArTu K	3,5	5/99
AZ4000	ArTu K	3,5	5/107
BA0400	ArTu K	3,3	5/88
BA0800	ArTu K	4,5	5/88

Code	Structure	Weight Kg.	Page
BA1250	ArTu K	9,16	5/88
BA1600	ArTu K	10,72	5/88
BA2000	ArTu K	15,7	5/88
BF1602	ArTu K	2,7	5/94
BF2502	ArTu K	4,2	5/94
BF4002	ArTu K	3	5/94
BF4012	ArTu K	6,5	5/94
BF6302	ArTu K	12,5	5/94
BF8002	ArTu K	19,1	5/94
BP0630	ArTu K	0,4	5/92
BP0632	ArTu K	0,55	5/92
BP0634	ArTu K	0,45	5/92
BP1250	ArTu K	2,8	5/92
BP1600	ArTu K	2,6	5/92
BP1621	ArTu K	42,74	5/92
BP1622	ArTu K	51,44	5/92
BP2500	ArTu K	4,3	5/92
BP3200	ArTu K	4,4	5/92
BR0250	ArTu K	1,3	5/92
BR0400	ArTu K	2,8	5/92
BR0630	ArTu K	6,2	5/92
BR1250	ArTu K	14,5	5/92
BR1600	ArTu K	29	5/92
BR2000	ArTu K	34,8	5/92
BR2010	ArTu K	63,36	5/92
BR2500	ArTu K	46,4	5/92
BR4005	ArTu K	4,4	5/92
BR6305	ArTu K	6,5	5/92
BR8005	ArTu K	8,6	5/92
BS3250	ArTu K	1,6	5/92
BS5050	ArTu K	1,8	5/92
BS6350	ArTu K	2,25	5/92
CA1600	ArTu K	1,571	5/107
CA1800	ArTu K	1,77	5/107
CA2000	ArTu K	1,97	5/107
ED0001	ArTu K	0,22	5/96
ED0002	ArTu K	0,28	5/96
ED0003	ArTu K	0,29	5/96
ED0004	ArTu K	0,29	5/96
ED0025	ArTu K	11555	5/97
ED0026	ArTu K	8000	5/97
ED2183	ArTu K	3100	5/95
ED2191	ArTu K	4100	5/95
ED2209	ArTu K	1450	5/95

Code	Structure	Weight Kg.	Page
ED2217	ArTu K	2,04	5/96
ED2225	ArTu K	2,1	5/96
ED2233	ArTu K	2,3	5/96
ED2241	ArTu K	1,7	5/96
ED2258	ArTu K	2,4	5/96
ED2266	ArTu K	2,7	5/96
ED2274	ArTu K	2,7	5/96
ED2282	ArTu K	2,196	5/96
ED2290	ArTu K	3	5/96
ED2308	ArTu K	3180	5/96
ED2316	ArTu K	3,48	5/96
ED2324	ArTu K	2,76	5/96
ED2332	ArTu K	3,1	5/96
ED2340	ArTu K	3	5/96
ED2357	ArTu K	2,76	5/96
ED2365	ArTu K	3,48	5/96
ED2373	ArTu K	1,104	5/96
ED2373	ArTu K	1,104	5/96
ED2373	ArTu K	1,104	5/96
ED2381	ArTu K	1,024	5/96
ED2399	ArTu K	0,92	5/96
ED2407	ArTu K	1,56	5/96
ED2531	ArTu K	972	5/95
ED2549	ArTu K	972	5/95
ED2550	ArTu K	880	5/95
ED2551	ArTu K	1600	5/95
ED2552	ArTu K	1540	5/95
ED2553	ArTu K	1540	5/95
ED2554	ArTu K	1540	5/95
ED2556	ArTu K	1037	5/95
ED2557	ArTu K	0	5/95
ED2558	ArTu K	0	5/95
ED2559	ArTu K	0	5/95
ED2560	ArTu K	0	5/95
ED2564	ArTu K	948	5/95
ED2572	ArTu K	1038	5/95
ED2590	ArTu K	972	5/95
ED2598	ArTu K	1068	5/95
ED2606	ArTu K	1156	5/95
ED2654	ArTu K	800	5/95
ED2662	ArTu K	800	5/95
ED2670	ArTu K	972	5/95
ED2720	ArTu K	1198	5/95
ED2738	ArTu K	1203	5/95

Code	Structure	Weight Kg.	Page
ED2746	ArTu K	1287	5/95
ED2753	ArTu K	1166	5/95
ED2845	ArTu K	576	5/96
ED2852	ArTu K	576	5/96
ED2894	ArTu K	900	5/95
ED2902	ArTu K	841	5/95
ED2910	ArTu K	867	5/95
ED2928	ArTu K	915	5/95
ED2936	ArTu K	580	5/96
ED2944	ArTu K	2154	5/97
ED2951	ArTu K	3336	5/97
ED2961	ArTu K	0,4	5/97
ED2962	ArTu K	0,6	5/97
ED2969	ArTu K	4,5	5/97
ED2977	ArTu K	6700	5/97
ED2985	ArTu K	1137	5/97
ED2993	ArTu K	1645	5/97
ED3009	ArTu K	2316	5/97
ED3017	ArTu K	2850	5/97
ED3025	ArTu K	4050	5/97
ED3033	ArTu K	510	5/97
ED3041	ArTu K	435	5/97
ED3058	ArTu K	384	5/97
ED3066	ArTu K	509	5/97
ED3082	ArTu K	1480	5/97
ED3090	ArTu K	3360	5/97
ED3101	ArTu K	0,3	5/97
ED3102	ArTu K	0,3	5/97
ED3103	ArTu K	0,3	5/97
ED3104	ArTu K	0,3	5/97
ED3108	ArTu K	300	5/97
ED3116	ArTu K	350	5/97
ED3124	ArTu K	498	5/97
ED3132	ArTu K	1977	5/97
ED3272	ArTu K	607	5/97
ED3280	ArTu K	608	5/97
ED3298	ArTu K	574	5/97
ED3355	ArTu K	400	5/97
ED3363	ArTu K	500	5/97
ED3371	ArTu K	600	5/97
ED3405	ArTu K	3700	5/97
ED3413	ArTu K	4800	5/97
ED3439	ArTu K	7800	5/97
EV1008	ArTu K	0,04	5/106

Code	Structure	Weight Kg.	Page
EV1036	ArTu K	0,04	5/106
EV1037	ArTu K	0,04	5/106
EV1039	ArTu K	0,04	5/106
EV1050	ArTu K	6,88	5/105
EV1051	ArTu K	1	5/105
EV1056	ArTu K	0,328	5/105
EV1058	ArTu K	0,576	5/105
EV1090	ArTu K	0,456	5/105
EV1091	ArTu K	0,88	5/105
EV1092	ArTu K	0,55	5/105
EV1093	ArTu K	0,55	5/105
EV1110	ArTu K	2,74	5/103
EV1111	ArTu K	0,68	5/103
EV1112	ArTu K	2,74	5/103
EV1113	ArTu K	0,125	5/103
EV1122	ArTu K	2,44	5/103
EV1123	ArTu K	2,49	5/103
EV1124	ArTu K	2,77	5/103
EV1125	ArTu K	2,77	5/103
EV1135	ArTu K	0,24	5/65
EV1136	ArTu K	0,16	5/65
EV1150	ArTu K	0,1	5/105
EV1151	ArTu K	0,1	5/105
EV1152	ArTu K	0,1	5/105
EV1153	ArTu K	0,1	5/105
EV1154	ArTu K	0,1	5/105
EV1155	ArTu K	0,01	5/105
EV1156	ArTu K	0,07	5/105
EV2110	ArTu K	0,558	5/103
EV2112	ArTu K	0,558	5/103
FH1020	ArTu K	6,42	5/84
FH1030	ArTu K	8,23	5/84
FH1040	ArTu K	10,06	5/84
FH1050	ArTu K	11,97	5/84
FH1060	ArTu K	13,92	5/84
FH3190	ArTu K	8,746	5/85
FH3191	ArTu K	7,854	5/85
FH3220	ArTu K	5	5/84
FH3224	ArTu K	2,33	5/84
FH3430	ArTu K	8,13	5/84
FH3434	ArTu K	3,5	5/84
FH3540	ArTu K	9,31	5/84
FH3544	ArTu K	4,66	5/84
FH3650	ArTu K	10,78	5/84

ArTu K structures
Order codes

Code	Structure	Weight Kg.	Page
FH3680	ArTu K	11	5/84
FH3690	ArTu K	5,248	5/85
FH3691	ArTu K	4,68	5/85
FH3760	ArTu K	12,74	5/84
FH3764	ArTu K	7,1	5/84
FH3780	ArTu K	12	5/84
FH3960	ArTu K	3,5	5/85
FH3960	ArTu K	3,5	5/85
FH3961	ArTu K	3,12	5/85
FH3965	ArTu K	6,5	5/85
FH3966	ArTu K	6,22	5/85
FH4220	ArTu K	0,228	5/84
FH4220	ArTu K	0,228	5/84
FH4220	ArTu K	0,228	5/84
FH4220	ArTu K	0,228	5/84
FH4430	ArTu K	0,9	5/84
FH4430	ArTu K	0,9	5/84
FH4540	ArTu K	1,1	5/84
FH4540	ArTu K	1,1	5/84
FH4650	ArTu K	1,3	5/84
FH4650	ArTu K	1,3	5/84
FH4760	ArTu K	1,5	5/84
FH4760	ArTu K	1,5	5/84
FH7510	ArTu K	13,92	5/84
FH7580	ArTu K	11,135	5/84
FR2600	ArTu K	5	5/77
FR2601	ArTu K	5	5/70
FR2800	ArTu K	6	5/77
FR2801	ArTu K	6	5/70
FR4600	ArTu K	10,5	5/77
FR4601	ArTu K	10,5	5/70
FR4800	ArTu K	11,5	5/77
FR4801	ArTu K	11,5	5/70
FR6600	ArTu K	16	5/77
FR6800	ArTu K	17,5	5/77
FV3456	ArTu K	6,85	5/85
FV3458	ArTu K	7,94	5/85
FV3556	ArTu K	10	5/85
FV3558	ArTu K	12	5/85
FV3668	ArTu K	13	5/85
FV3788	ArTu K	15	5/85
FV4456	ArTu K	2,34	5/85
FV4458	ArTu K	4,4	5/85
FV4556	ArTu K	4	5/85

Code	Structure	Weight Kg.	Page
FV4557	ArTu K	1,85	5/85
FV4558	ArTu K	4,5	5/85
FV4668	ArTu K	5,5	5/85
FV4788	ArTu K	6,5	5/85
GC6002	ArTu K	1	5/63
GC8002	ArTu K	1	5/63
GD1000	ArTu K	1,75	5/63
GD1001	ArTu K	1,437	5/79
GD1520	ArTu K	0,8	5/97
GD1530	ArTu K	1,79	5/97
GD4002	ArTu K	0,8	5/63
GD4005	ArTu K	0,8	5/79
GD6002	ArTu K	1	5/63
GD6008	ArTu K	2,4	5/63
GD6009	ArTu K	2,4	5/63
GD6010	ArTu K	1,6	5/63
GD6011	ArTu K	1,68	5/63
GD7005	ArTu K	0,9	5/79
GD8002	ArTu K	1	5/63
GD8010	ArTu K	1,9	5/63
GD9005	ArTu K	1,15	5/79
IP3010	ArTu K	0,66	5/59
IP3030	ArTu K	0,7	5/59
IP3040	ArTu K	0,5	5/59
IP3060	ArTu K	0,62	5/59
IP3080	ArTu K	0,7	5/59
IP3161	ArTu K	0,6	5/59
IP3163	ArTu K	0,6	5/59
IP3180	ArTu K	0,7	5/59
IP3182	ArTu K	0,7	5/59
IP3200	ArTu K	0,78	5/59
IP3202	ArTu K	0,7	5/59
IP4140	ArTu K	0,9	5/60
IP4141	ArTu K	1,28	5/60
IP4160	ArTu K	1,35	5/60
IP4161	ArTu K	2,44	5/60
IP4180	ArTu K	1,8	5/60
IP4181	ArTu K	3,22	5/60
KE2215	ArTu K	13	5/83
KE2235	ArTu K	18	5/83
KE3205	ArTu K	13	5/83
KE3215	ArTu K	13	5/76
KE3235	ArTu K	13	5/76
KE3236	ArTu K	18	5/83

Code	Structure	Weight Kg.	Page
KE4000	ArTu K	16,5	5/76
KE4100	ArTu K	16,5	5/83
KE4214	ArTu K	13	5/83
KE4215	ArTu K	13	5/76
KE4234	ArTu K	13	5/83
KE4235	ArTu K	13	5/76
KE5214	ArTu K	13,2	5/83
KE5215	ArTu K	13,2	5/76
KE5234	ArTu K	13,2	5/83
KE5235	ArTu K	13,2	5/76
KE5236	ArTu K	16,5	5/83
KE5237	ArTu K	16,5	5/76
KE6340	ArTu K	16,2	5/83
KE6341	ArTu K	16,2	5/76
KE6342	ArTu K	16,2	5/76
KE6343	ArTu K	16,2	5/83
KI4114	ArTu K	12,65	5/72
KI4115	ArTu K	12,65	5/72
KI4116	ArTu K	22,45	5/80
KI4117	ArTu K	25,68	5/80
KI4118	ArTu K	25,68	5/80
KI4119	ArTu K	22,45	5/80
KI5114	ArTu K	12,65	5/72
KI5115	ArTu K	12,65	5/72
KI5116	ArTu K	22,45	5/80
KI5117	ArTu K	25,68	5/81
KI5118	ArTu K	25,68	5/81
KI5119	ArTu K	22,45	5/80
KL1102	ArTu K	7,52	5/73
KL2103	ArTu K	5,1	5/68
KL2104	ArTu K	7,2	5/73
KL3103	ArTu K	7,1	5/68
KL3104	ArTu K	7,2	5/73
KL3113	ArTu K	4,95	5/68
KL3114	ArTu K	7,76	5/73
KL3212	ArTu K	10,04	5/75
KL3613	ArTu K	4,594	5/68
KL4115	ArTu K	6,55	5/68
KL4116	ArTu K	3,93	5/68
KL4118	ArTu K	10,44	5/75
KL5101	ArTu K	6,32	5/73
KL5102	ArTu K	15,42	5/69
KL5103	ArTu K	15,42	5/75
KL5114	ArTu K	9,22	5/68

Code	Structure	Weight Kg.	Page
KL5115	ArTu K	10,25	5/73
KL5116	ArTu K	5,9	5/68
KL5117	ArTu K	13,25	5/75
KL5212	ArTu K	12,25	5/69
KL5213	ArTu K	12,25	5/75
KL5214	ArTu K	11,65	5/75
KL6113	ArTu K	12,71	5/68
KL6124	ArTu K	12,71	5/75
KL6213	ArTu K	12,71	5/69
KL6214	ArTu K	12,71	5/75
KL7112	ArTu K	9,38	5/73
KL7212	ArTu K	12,31	5/75
KL7212	ArTu K	12,31	5/76
KL7213	ArTu K	10,58	5/75
KL7213	ArTu K	10,58	5/76
KO1250	ArTu K	20,5	5/76
KO2260	ArTu K	6,31	5/70
KO2260	ArTu K	6,31	5/76
KO2261	ArTu K	6,31	5/70
KO2261	ArTu K	6,31	5/76
KO2280	ArTu K	8,18	5/70
KO2280	ArTu K	8,18	5/76
KO2281	ArTu K	8,18	5/70
KO2281	ArTu K	8,18	5/76
KO3660	ArTu K	8,23	5/76
KO3680	ArTu K	10,83	5/76
KT1100	ArTu K	3,89	5/80
KT1101	ArTu K	5,64	5/71
KT1102	ArTu K	4	5/68
KT1110	ArTu K	3,89	5/80
KT1111	ArTu K	3,89	5/71
KT1112	ArTu K	5,97	5/71
KT1117	ArTu K	3,89	5/68
KT1401	ArTu K	3,76	5/71
KT1410	ArTu K	2,59	5/80
KT1411	ArTu K	3,6	5/71
KT2101	ArTu K	5,4	5/71
KT2102	ArTu K	4	5/68
KT2110	ArTu K	3,9	5/80
KT2111	ArTu K	3,89	5/71
KT2112	ArTu K	3,2	5/71
KT2117	ArTu K	3,89	5/68
KT2120	ArTu K	3,9	5/80
KT2121	ArTu K	3,89	5/71

Code	Structure	Weight Kg.	Page
KT2210	ArTu K	3,89	5/80
KT2401	ArTu K	3,6	5/71
KT2410	ArTu K	2,8	5/80
KT2411	ArTu K	3,6	5/71
KT2420	ArTu K	2,7	5/80
KT2421	ArTu K	3,74	5/71
KT3101	ArTu K	5,4	5/71
KT3102	ArTu K	5,6	5/68
KT3110	ArTu K	5,6	5/80
KT3112	ArTu K	3,9	5/68
KT3114	ArTu K	5	5/71
KT3115	ArTu K	5,6	5/80
KT3116	ArTu K	4,5	5/71
KT3119	ArTu K	3,89	5/71
KT3120	ArTu K	5,6	5/80
KT3121	ArTu K	5,82	5/71
KT3124	ArTu K	5,6	5/80
KT3131	ArTu K	11,41	5/71
KT3132	ArTu K	10,57	5/80
KT3211	ArTu K	7,53	5/74
KT3212	ArTu K	5,6	5/69
KT3221	ArTu K	7,53	5/74
KT3401	ArTu K	3,6	5/71
KT3410	ArTu K	4	5/80
KT3416	ArTu K	5,02	5/74
KT3419	ArTu K	3,6	5/71
KT3420	ArTu K	4	5/80
KT3421	ArTu K	3,88	5/71
KT3426	ArTu K	5,02	5/74
KT4101	ArTu K	3,16	5/71
KT4102	ArTu K	11,56	5/69
KT4103	ArTu K	11,16	5/74
KT4110	ArTu K	2,95	5/68
KT4111	ArTu K	5,5	5/71
KT4112	ArTu K	2,8	5/68
KT4113	ArTu K	3,16	5/80
KT4116	ArTu K	7,83	5/74
KT4120	ArTu K	1,87	5/80
KT4121	ArTu K	11,37	5/82
KT4122	ArTu K	2,95	5/71
KT4124	ArTu K	2,35	5/80
KT4125	ArTu K	6,33	5/71
KT4126	ArTu K	8,44	5/74
KT4127	ArTu K	6,33	5/71

Code	Structure	Weight Kg.	Page
KT4128	ArTu K	8,44	5/82
KT4129	ArTu K	9,5	5/82
KT4130	ArTu K	4,74	5/80
KT4211	ArTu K	8,7	5/74
KT4212	ArTu K	9,25	5/69
KT4221	ArTu K	8,44	5/74
KT4222	ArTu K	11,2	5/82
KT4231	ArTu K	8,44	5/74
KT4310	ArTu K	9,84	5/80
KT4320	ArTu K	14,77	5/80
KT4411	ArTu K	2,95	5/71
KT4412	ArTu K	4,66	5/74
KT5101	ArTu K	4,74	5/72
KT5102	ArTu K	11,42	5/69
KT5103	ArTu K	10,55	5/74
KT5110	ArTu K	4,43	5/68
KT5111	ArTu K	6,45	5/72
KT5112	ArTu K	5,8	5/68
KT5117	ArTu K	9,85	5/74
KT5120	ArTu K	4,74	5/72
KT5121	ArTu K	4,74	5/72
KT5122	ArTu K	2,68	5/80
KT5123	ArTu K	11,25	5/82
KT5124	ArTu K	8,44	5/82
KT5125	ArTu K	7,58	5/82
KT5126	ArTu K	5,63	5/82
KT5128	ArTu K	10,25	5/82
KT5129	ArTu K	8,44	5/82
KT5130	ArTu K	4,92	5/72
KT5131	ArTu K	4,92	5/72
KT5134	ArTu K	6,33	5/72
KT5135	ArTu K	6,33	5/72
KT5136	ArTu K	5,89	5/80
KT5137	ArTu K	9,5	5/82
KT5138	ArTu K	8,44	5/74
KT5139	ArTu K	10,55	5/74
KT5211	ArTu K	9,5	5/74
KT5212	ArTu K	8,25	5/69
KT5214	ArTu K	9,85	5/74
KT5221	ArTu K	10,55	5/74
KT5222	ArTu K	8,44	5/74
KT5223	ArTu K	11,25	5/82
KT5231	ArTu K	10,55	5/74
KT5232	ArTu K	8,44	5/74

ArTu K structures
Order codes

Code	Structure	Weight Kg.	Page
KT5310	ArTu K	14,77	5/80
KT5320	ArTu K	14,77	5/81
KT5321	ArTu K	14,77	5/81
KT5401	ArTu K	7,71	5/74
KT5411	ArTu K	2,65	5/71
KT5412	ArTu K	3,66	5/74
KT5420	ArTu K	4,89	5/80
KT5421	ArTu K	4,58	5/80
KT5430	ArTu K	4,92	5/80
KT5431	ArTu K	4,92	5/80
KT6110	ArTu K	9,53	5/81
KT6111	ArTu K	9,53	5/72
KT6112	ArTu K	10,25	5/72
KT6113	ArTu K	9,53	5/68
KT6114	ArTu K	10,65	5/72
KT6115	ArTu K	9,53	5/72
KT6116	ArTu K	15,25	5/72
KT6117	ArTu K	15,25	5/72
KT6118	ArTu K	15,25	5/72
KT6119	ArTu K	15,25	5/72
KT6120	ArTu K	9,53	5/75
KT6121	ArTu K	9,53	5/75
KT6122	ArTu K	9,53	5/75
KT6123	ArTu K	9,53	5/75
KT6130	ArTu K	9,53	5/81
KT6131	ArTu K	9,53	5/72
KT6132	ArTu K	9,53	5/82
KT6133	ArTu K	9,53	5/82
KT6134	ArTu K	9,53	5/81
KT6141	ArTu K	9,53	5/82
KT6142	ArTu K	15,25	5/81
KT6143	ArTu K	15,25	5/81
KT6144	ArTu K	15,25	5/81
KT6145	ArTu K	15,25	5/81
KT6210	ArTu K	9,53	5/82
KT6211	ArTu K	9,53	5/74
KT6213	ArTu K	9,53	5/69
KT6220	ArTu K	9,53	5/81
KT6221	ArTu K	9,53	5/81
KT6230	ArTu K	9,53	5/82
KT7110	ArTu K	5,78	5/71
KT7111	ArTu K	8,1	5/72
KT7115	ArTu K	10,41	5/81
KT7211	ArTu K	10,91	5/75

Code	Structure	Weight Kg.	Page
KT7211	ArTu K	10,91	5/76
KT7215	ArTu K	11,645	5/82
KT7215	ArTu K	11,645	5/83
KT7230	ArTu K	20,92	5/82
KT7230	ArTu K	20,92	5/83
KT7231	ArTu K	8,98	5/75
KT7231	ArTu K	8,98	5/76
KT7560	ArTu K	8,44	5/72
KT7561	ArTu K	8,98	5/81
KT8210	ArTu K	22,321	5/82
KT8211	ArTu K	20,214	5/75
KX1131	ArTu K	5,64	5/73
KX1132	ArTu K	5,64	5/73
KX1401	ArTu K	2,95	5/71
KX1419	ArTu K	3,6	5/71
KX1602	ArTu K	3,702	5/68
KX1603	ArTu K	5,64	5/69
KX1604	ArTu K	5,64	5/69
KX1605	ArTu K	4,982	5/72
KX1607	ArTu K	4,728	5/72
KX1608	ArTu K	12,05	5/72
KX1609	ArTu K	4,75	5/72
KX1611	ArTu K	4,728	5/72
KX1617	ArTu K	3,663	5/68
KX1618	ArTu K	5,64	5/69
KX1621	ArTu K	4,728	5/72
KX1622	ArTu K	7,95	5/72
KX1801	ArTu K	7,52	5/73
KX2411	ArTu K	3,6	5/71
KX2412	ArTu K	6,25	5/75
KX2601	ArTu K	3,985	5/72
KX2602	ArTu K	3,539	5/68
KX2604	ArTu K	4,25	5/69
KX2605	ArTu K	3,2	5/73
KX2607	ArTu K	4,728	5/73
KX2608	ArTu K	12,05	5/73
KX2611	ArTu K	4,532	5/72
KX2612	ArTu K	4,25	5/75
KX2619	ArTu K	3,592	5/68
KX2621	ArTu K	4,142	5/72
KX2622	ArTu K	7,85	5/73
KX2631	ArTu K	4,728	5/72
KX2632	ArTu K	4,85	5/73
KX2634	ArTu K	5,25	5/73

Code	Structure	Weight Kg.	Page
KX2801	ArTu K	7,2	5/73
KX3131	ArTu K	11,41	5/73
KX3132	ArTu K	5,64	5/73
KX3411	ArTu K	3,6	5/71
KX3412	ArTu K	5,02	5/74
KX3601	ArTu K	5,4	5/73
KX3602	ArTu K	5,6	5/68
KX3603	ArTu K	7,1	5/68
KX3605	ArTu K	5	5/73
KX3607	ArTu K	4,728	5/73
KX3609	ArTu K	5,64	5/69
KX3611	ArTu K	4,679	5/73
KX3612	ArTu K	3,596	5/68
KX3613	ArTu K	4,95	5/75
KX3614	ArTu K	5,6	5/69
KX3621	ArTu K	5,82	5/73
KX3801	ArTu K	7,2	5/73
KX3811	ArTu K	6,065	5/73
KX3812	ArTu K	10,04	5/75
KX4141	ArTu K	12,65	5/73
KX4142	ArTu K	5,64	5/73
KX4411	ArTu K	2,95	5/71
KX4412	ArTu K	4,66	5/74
KX4601	ArTu K	3,16	5/73
KX4602	ArTu K	11,56	5/69
KX4603	ArTu K	11,16	5/75
KX4604	ArTu K	5,45	5/69
KX4606	ArTu K	3,75	5/73
KX4607	ArTu K	4,728	5/73
KX4610	ArTu K	2,95	5/68
KX4611	ArTu K	4,637	5/73
KX4612	ArTu K	3,539	5/68
KX4614	ArTu K	4,899	5/69
KX4615	ArTu K	6,55	5/68
KX4616	ArTu K	7,83	5/75
KX4617	ArTu K	5,918	5/75
KX4622	ArTu K	4,625	5/73
KX4627	ArTu K	6,33	5/73
KX4632	ArTu K	5,55	5/73
KX4633	ArTu K	5,45	5/73
KX4818	ArTu K	10,44	5/75
KY1131	ArTu K	8,293	5/81
KY1411	ArTu K	2,531	5/80
KY1601	ArTu K	3,89	5/81

Code	Structure	Weight Kg.	Page
KY1605	ArTu K	3,75	5/81
KY1607	ArTu K	3,89	5/81
KY1611	ArTu K	3,89	5/81
KY1621	ArTu K	3,89	5/81
KY2411	ArTu K	2,8	5/80
KY2421	ArTu K	2,7	5/80
KY2601	ArTu K	3,5	5/81
KY2605	ArTu K	3,89	5/81
KY2607	ArTu K	3,89	5/81
KY2611	ArTu K	3,581	5/81
KY2621	ArTu K	3,755	5/81
KY2631	ArTu K	5,6	5/81
KY3131	ArTu K	10,57	5/81
KY3411	ArTu K	4	5/80
KY3421	ArTu K	4	5/80
KY3601	ArTu K	5,5	5/81
KY3605	ArTu K	5,6	5/81
KY3607	ArTu K	3,89	5/81
KY3611	ArTu K	3,619	5/81
KY3621	ArTu K	5,6	5/81
KY4141	ArTu K	22,45	5/81
KY4411	ArTu K	1,87	5/80
KY4412	ArTu K	9,5	5/82
KY4601	ArTu K	3,5	5/81
KY4604	ArTu K	9,84	5/81
KY4607	ArTu K	3,6	5/81
KY4611	ArTu K	2,35	5/81
KY4612	ArTu K	11,37	5/82
KY4621	ArTu K	3,734	5/81
KY4631	ArTu K	5,598	5/81
LA1810	ArTu K	52,5	5/55
LA1860	ArTu K	31	5/55
LA1880	ArTu K	42	5/55
LA2010	ArTu K	52	5/55
LA2060	ArTu K	44	5/55
LA2080	ArTu K	47	5/55
LF1626	ArTu K	12,1	5/55
LF1810	ArTu K	52	5/55
LF1826	ArTu K	13,5	5/55
LF1840	ArTu K	19	5/55
LF1850	ArTu K	22,3	5/55
LF1860	ArTu K	25	5/55
LF1880	ArTu K	44	5/55
LF2010	ArTu K	55	5/55

Code	Structure	Weight Kg.	Page
LF2026	ArTu K	15	5/55
LF2040	ArTu K	19,5	5/55
LF2050	ArTu K	24,78	5/55
LF2060	ArTu K	35	5/55
LF2080	ArTu K	47	5/55
LI1840	ArTu K	23	5/57
LI1860	ArTu K	28	5/57
LI1880	ArTu K	33	5/57
LI2040	ArTu K	26	5/57
LI2060	ArTu K	30	5/57
LI2080	ArTu K	35	5/57
PA1010	ArTu K	1,913	5/67
PA1600	ArTu K	2,6	5/67
PA2010	ArTu K	3,826	5/67
PA2600	ArTu K	2,94	5/67
PB0802	ArTu K	0,66	5/88
PB0803	ArTu K	0,4	5/88
PB1600	ArTu K	1,55	5/88
PB1601	ArTu K	1,12	5/88
PB1603	ArTu K	1,11	5/88
PB3201	ArTu K	1,11	5/88
PC1210	ArTu K	1,96	5/67
PC1220	ArTu K	3,62	5/67
PC1230	ArTu K	5,29	5/67
PC1240	ArTu K	6,96	5/67
PC1250	ArTu K	8,63	5/67
PC1260	ArTu K	10,3	5/67
PC1400	ArTu K	0,64	5/67
PC1600	ArTu K	0,96	5/67
PC1660	ArTu K	13,5	5/67
PC1680	ArTu K	18,3	5/67
PC1800	ArTu K	1,27	5/67
PC1840	ArTu K	10	5/67
PC1860	ArTu K	15	5/67
PC1880	ArTu K	20,25	5/67
PC2040	ArTu K	11,5	5/67
PC2060	ArTu K	16,875	5/67
PC2080	ArTu K	22,57	5/67
PC2400	ArTu K	1,27	5/67
PC2600	ArTu K	1,4	5/67
PC2800	ArTu K	2,6	5/67
PC3400	ArTu K	1,57	5/67
PC3600	ArTu K	1,96	5/67
PC3800	ArTu K	3,23	5/67

Code	Structure	Weight Kg.	Page
PC4400	ArTu K	2,06	5/67
PC4600	ArTu K	2,45	5/67
PC4800	ArTu K	4,41	5/67
PC6400	ArTu K	3,43	5/67
PC6600	ArTu K	4,41	5/67
PC6800	ArTu K	6,37	5/67
PC8600	ArTu K	5,39	5/67
PC8800	ArTu K	8,58	5/67
PF1806	ArTu K	25	5/78
PF1808	ArTu K	32	5/78
PF2005	ArTu K	2,5	5/79
PF2006	ArTu K	35,5	5/78
PF2008	ArTu K	36	5/78
PF2090	ArTu K	4,166	5/79
PF2100	ArTu K	5,166	5/77
PF2401	ArTu K	1,8	5/77
PF2405	ArTu K	1,8	5/79
PF2601	ArTu K	2,5	5/77
PF2610	ArTu K	2,5	5/70
PF2801	ArTu K	3,6	5/77
PF2805	ArTu K	3,2	5/79
PF2810	ArTu K	3,6	5/70
PF3005	ArTu K	4,6	5/79
PF3090	ArTu K	6,151	5/79
PF3100	ArTu K	7,151	5/77
PF3403	ArTu K	2,6	5/77
PF3405	ArTu K	2,9	5/79
PF3601	ArTu K	4,6	5/77
PF3801	ArTu K	6	5/77
PF3805	ArTu K	4,6	5/79
PF4005	ArTu K	5,6	5/79
PF4090	ArTu K	8,135	5/79
PF4100	ArTu K	9,135	5/77
PF4401	ArTu K	4,1	5/77
PF4405	ArTu K	3,6	5/79
PF4601	ArTu K	5,6	5/77
PF4610	ArTu K	4,5	5/70
PF4801	ArTu K	9	5/77
PF4805	ArTu K	6,2	5/79
PF4810	ArTu K	7,5	5/70
PF6005	ArTu K	8,25	5/79
PF6090	ArTu K	12,103	5/79
PF6100	ArTu K	13,103	5/77
PF6401	ArTu K	7	5/77

ArTu K structures
Order codes

Code	Structure	Weight Kg.	Page
PF6405	ArTu K	5,9	5/79
PF6601	ArTu K	9,5	5/77
PF6801	ArTu K	11	5/77
PF6805	ArTu K	9,1	5/79
PF8005	ArTu K	12,5	5/79
PF8805	ArTu K	12,4	5/79
PM2010	ArTu K	3,826	5/64
PM2312	ArTu K	2,93	5/64
PM2315	ArTu K	3,9	5/64
PM2424	ArTu K	1,67	5/64
PM2624	ArTu K	1,2	5/64
PM2624	ArTu K	1,2	5/97
PM2836	ArTu K	2	5/64
PM2836	ArTu K	2	5/97
PM3424	ArTu K	1,41	5/64
PM3624	ArTu K	2,87	5/64
PM3624	ArTu K	2,87	5/96
PM3648	ArTu K	2,87	5/64
PM3836	ArTu K	3,82	5/64
PM3836	ArTu K	3,82	5/96
PM3872	ArTu K	3,82	5/64
PM6672	ArTu K	4,41	5/64
PO1631	ArTu K	12	5/62
PO1633	ArTu K	14,6	5/62
PO1661	ArTu K	18,63	5/56
PO1681	ArTu K	23,6	5/56
PO1811	ArTu K	25,098	5/56
PO1831	ArTu K	8	5/62
PO1833	ArTu K	13	5/62
PO1841	ArTu K	15,2	5/56
PO1861	ArTu K	20,5	5/56
PO1881	ArTu K	24	5/56
PO2011	ArTu K	24,5	5/56
PO2031	ArTu K	9	5/62
PO2033	ArTu K	9	5/62
PO2041	ArTu K	16,2	5/56
PO2061	ArTu K	22	5/56
PO2081	ArTu K	28	5/56
PR2600	ArTu K	1,96	5/67
PR2800	ArTu K	2,74	5/67
PR4600	ArTu K	3,92	5/67
PR4800	ArTu K	4,12	5/67
PR6600	ArTu K	5,39	5/67
PR6800	ArTu K	6,86	5/67
PS2017	ArTu K	3,826	5/65
PS2019	ArTu K	3,826	5/65
PS2720	ArTu K	1,27	5/65
PS2728	ArTu K	2,45	5/65

Code	Structure	Weight Kg.	Page
PS2960	ArTu K	1,27	5/65
PS2968	ArTu K	2,45	5/65
PS4720	ArTu K	1,27	5/65
PS4728	ArTu K	2,45	5/65
PS4960	ArTu K	1,3	5/65
PS4968	ArTu K	2,5	5/65
PV1661	ArTu K	18,6	5/56
PV1681	ArTu K	23,6	5/56
PV1682	ArTu K	23,6	5/56
PV1811	ArTu K	30,85	5/56
PV1812	ArTu K	25,098	5/56
PV1841	ArTu K	14,3	5/56
PV1861	ArTu K	19,5	5/56
PV1863	ArTu K	24,2	5/57
PV1881	ArTu K	24,2	5/56
PV1882	ArTu K	35	5/56
PV1883	ArTu K	28,2	5/57
PV2011	ArTu K	41,13	5/56
PV2012	ArTu K	24,5	5/56
PV2041	ArTu K	15,8	5/56
PV2061	ArTu K	21,5	5/56
PV2063	ArTu K	28,2	5/57
PV2081	ArTu K	30,45	5/56
PV2082	ArTu K	32	5/56
PV2083	ArTu K	32	5/57
RA1810	ArTu K	25	5/58
RA1860	ArTu K	20,5	5/58
RA1880	ArTu K	24	5/58
RA2010	ArTu K	28,82	5/58
RA2060	ArTu K	20,66	5/58
RA2080	ArTu K	26,56	5/58
RF1630	ArTu K	10,8	5/62
RF1660	ArTu K	18,2	5/58
RF1680	ArTu K	23,2	5/58
RF1810	ArTu K	25	5/58
RF1830	ArTu K	10,5	5/62
RF1840	ArTu K	15,5	5/58
RF1860	ArTu K	20,5	5/58
RF1880	ArTu K	24	5/58
RF2010	ArTu K	28,82	5/58
RF2030	ArTu K	11,5	5/62
RF2040	ArTu K	16,8	5/58
RF2060	ArTu K	20,66	5/58
RF2080	ArTu K	26,56	5/58
SA1350	ArTu K	2,2	5/98
SH1030	ArTu K	2,94	5/86
SH1090	ArTu K	3,785	5/86
SH1100	ArTu K	2,108	5/86

Code	Structure	Weight Kg.	Page
SH2030	ArTu K	2,45	5/86
SH4000	ArTu K	2	5/86
SH4030	ArTu K	3,3	5/86
SH4031	ArTu K	3,15	5/87
SH4033	ArTu K	5,31	5/87
SH4034	ArTu K	6,49	5/87
SH4035	ArTu K	9,23	5/87
SH6000	ArTu K	1,265	5/86
SH8000	ArTu K	1,9	5/86
SH8570	ArTu K	2,984	5/86
SK1010	ArTu K	64,5	5/53
SK1100	ArTu K	64,5	5/54
SK1600	ArTu K	16,72	5/53
SK1604	ArTu K	6,75	5/54
SK1800	ArTu K	19	5/53
SK1802	ArTu K	15,19	5/55
SK1803	ArTu K	9,5	5/54
SK1804	ArTu K	8	5/54
SK1815	ArTu K	19,42	5/54
SK1880	ArTu K	4,5	5/61
SK1881	ArTu K	3,97	5/84
SK2000	ArTu K	20,8	5/53
SK2003	ArTu K	10	5/54
SK2003	ArTu K	10	5/55
SK2004	ArTu K	9,5	5/54
SK2015	ArTu K	21,7	5/54
SK2080	ArTu K	5,2	5/61
SK2081	ArTu K	8,6	5/84
SK4010	ArTu K	35	5/53
SK4040	ArTu K	20,5	5/53
SK4050	ArTu K	28,85	5/53
SK4060	ArTu K	30,3	5/53
SK4080	ArTu K	36	5/53
SK6010	ArTu K	52,5	5/53
SK6025	ArTu K	23,8	5/53
SK6040	ArTu K	30,3	5/53
SK6050	ArTu K	36,54	5/53
SK6060	ArTu K	41,6	5/53
SK6080	ArTu K	46,5	5/53
SK6600	ArTu K	41,6	5/54
SK8010	ArTu K	54,9	5/53
SK8025	ArTu K	28,28	5/53
SK8040	ArTu K	36	5/53
SK8050	ArTu K	44,84	5/53
SK8060	ArTu K	49,5	5/53
SK8080	ArTu K	57,5	5/53
SK8800	ArTu K	57,5	5/54
SV1815	ArTu K	14,63	5/87

Code	Structure	Weight Kg.	Page
SV1860	ArTu K	7,2	5/87
SV1880	ArTu K	11,5	5/87
SV2010	ArTu K	2,608	5/86
SV2011	ArTu K	1,587	5/87
SV2015	ArTu K	16,25	5/87
SV2061	ArTu K	1,76	5/86
SV2064	ArTu K	3,13	5/87
SV2080	ArTu K	1,26	5/87
SV2081	ArTu K	2,087	5/86
SV2265	ArTu K	7,84	5/87
SV2285	ArTu K	12,74	5/87
SV3010	ArTu K	3,912	5/86
SV3060	ArTu K	2,348	5/86
SV3080	ArTu K	3,129	5/86
SV4010	ArTu K	5,216	5/86
SV4011	ArTu K	3,587	5/87
SV4061	ArTu K	2,35	5/86
SV4080	ArTu K	10,1	5/87
SV4081	ArTu K	4,173	5/86
TR1201	ArTu K	3,06	5/94
TR1205	ArTu K	3,45	5/94
TR4101	ArTu K	0,49	5/102
TR6001	ArTu K	0,78	5/93
TR6001	ArTu K	0,78	5/102
TR6005	ArTu K	0,39	5/93
TR6005	ArTu K	0,39	5/102
TR6101	ArTu K	0,39	5/93
TR6101	ArTu K	0,39	5/102
TR6201	ArTu K	0,39	5/94
TR6205	ArTu K	0,49	5/94
TR6301	ArTu K	0,49	5/93
TR7005	ArTu K	1,18	5/93
TR7005	ArTu K	1,18	5/102
TR8000	ArTu K	0,98	5/93
TR8000	ArTu K	0,98	5/102
TR8001	ArTu K	0,98	5/93
TR8001	ArTu K	0,98	5/102
TR8005	ArTu K	0,49	5/93
TR8005	ArTu K	0,49	5/102
TR8101	ArTu K	0,49	5/93
TR8101	ArTu K	0,49	5/102
TR8201	ArTu K	0,49	5/94
TR8205	ArTu K	0,78	5/94
TR8301	ArTu K	0,49	5/93
TR8400	ArTu K	0,5	5/102
TR8500	ArTu K	0,45	5/102
TR8600	ArTu K	0,5	5/102
TR8800	ArTu K	0,5	5/102

Code	Structure	Weight Kg.	Page
TR8900	ArTu K	0,62	5/102
TS4000	ArTu K	2	5/104
TS4001	ArTu K	2,5	5/104
TS4002	ArTu K	2	5/104
TS4003	ArTu K	2	5/104
TS4011	ArTu K	2	5/104
TS4012	ArTu K	2	5/104
TS4013	ArTu K	2	5/104
TV1001	ArTu K	1,53	5/90
TV1001	ArTu K	1,53	5/93
TV1005	ArTu K	2,84	5/90
TV1005	ArTu K	2,84	5/93
TV1011	ArTu K	1,78	5/91
TV1101	ArTu K	1,32	5/90
TV1101	ArTu K	1,32	5/93
TV1261	ArTu K	2,89	5/91
TV1261	ArTu K	2,89	5/94
TV1311	ArTu K	11,5	5/94
TV3000	ArTu K	0,98	5/90
TV3101	ArTu K	0,5	5/90
TV3201	ArTu K	0,62	5/90
TV4000	ArTu K	0,98	5/90
TV4001	ArTu K	0,98	5/90
TV4221	ArTu K	0,98	5/91
TV5101	ArTu K	1,18	5/90
TV5101	ArTu K	1,18	5/102
TV6001	ArTu K	0,45	5/90
TV6005	ArTu K	0,49	5/90
TV6011	ArTu K	0,73	5/91
TV6101	ArTu K	0,83	5/90
TV6201	ArTu K	0,93	5/90
TV6202	ArTu K	1,96	5/90
TV6203	ArTu K	0,43	5/91
TV6221	ArTu K	1,08	5/91
TV8001	ArTu K	0,74	5/90
TV8005	ArTu K	0,78	5/90
TV8011	ArTu K	1,08	5/91
TV8101	ArTu K	1,13	5/90
TV8201	ArTu K	1,22	5/90
TV8202	ArTu K	2,61	5/90
TV8203	ArTu K	0,58	5/91
TV8211	ArTu K	3,4	5/91
TV8211	ArTu K	3,4	5/91
TV8211	ArTu K	3,4	5/94
TV8221	ArTu K	1,39	5/91
VB7035	ArTu K	0,6	5/107
VC1624	ArTu K	17,5	5/61
VC1820	ArTu K	28,5	5/61

Code	Structure	Weight Kg.	Page
VC1823	ArTu K	26	5/61
VC1824	ArTu K	19,5	5/61
VC2020	ArTu K	31,5	5/61
VC2023	ArTu K	30	5/61
VC2024	ArTu K	22,9	5/61
VC3010	ArTu K	34,25	5/62
VC3025	ArTu K	19,25	5/62
VC3040	ArTu K	24,5	5/62
VC3050	ArTu K	26,55	5/62
VC3060	ArTu K	28	5/62
VC3080	ArTu K	29,5	5/62
ZD1015	ArTu K	1,3	5/53
ZD1025	ArTu K	1,72	5/53
ZD1030	ArTu K	2,19	5/53
ZD1050	ArTu K	3,38	5/53
ZD1070	ArTu K	4,57	5/53
ZD1090	ArTu K	5,75	5/53
ZD2324	ArTu K	3,8	5/99
ZD2340	ArTu K	3,8	5/99
ZD2350	ArTu K	6,14	5/99
ZD2361	ArTu K	4,2	5/99
ZD2381	ArTu K	4,5	5/99
ZD2440	ArTu K	6,7	5/99
ZD2450	ArTu K	6,97	5/99
ZD2460	ArTu K	8,1	5/99
ZD2480	ArTu K	11,5	5/99
ZD2624	ArTu K	11,4	5/99
ZD2640	ArTu K	9,2	5/99
ZD2650	ArTu K	10,56	5/99
ZD2660	ArTu K	11	5/99
ZD2680	ArTu K	12,61	5/99
ZD2824	ArTu K	15,2	5/99
ZD2840	ArTu K	10,9	5/99
ZD2850	ArTu K	12,75	5/99
ZD2860	ArTu K	13	5/99
ZD2880	ArTu K	17,33	5/99
ZD4010	ArTu K	14,38	5/99
ZD6010	ArTu K	15,87	5/99
ZD8010	ArTu K	17,52	5/99
ZK1100	ArTu K	8,351	5/100
ZR3000	ArTu K	12,87	5/100
ZR4000	ArTu K	15,7	5/100
ZR6000	ArTu K	15,6	5/100
ZR8000	ArTu K	20	5/100

Notes

Notes

Notes

Notes

Contact us

ABB SACE
A division of ABB S.p.A.
Automation and Distribution Boards
Via Italia, 58
23846 Garbagnate Monastero (LC) - Italy
Tel: +39 031 3570.111
Fax: +39 031 3570.228

www.abb.com/lowvoltage

The data and illustrations are not binding. We reserve the right to modify the contents of this document on the basis of technical development of the products, without prior notice.

Copyright 2013 ABB. All right reserved.

1STC008001D0203 - 12.2012 - 3.000

Power and productivity
for a better world™