Doc. N.° 1STM604121R0006

IS2

Manuale istruzioni
Instruction handbook
Instructions de montage
Manuale de instrucciones
Instruções de montagem
Anwender-Handbuch

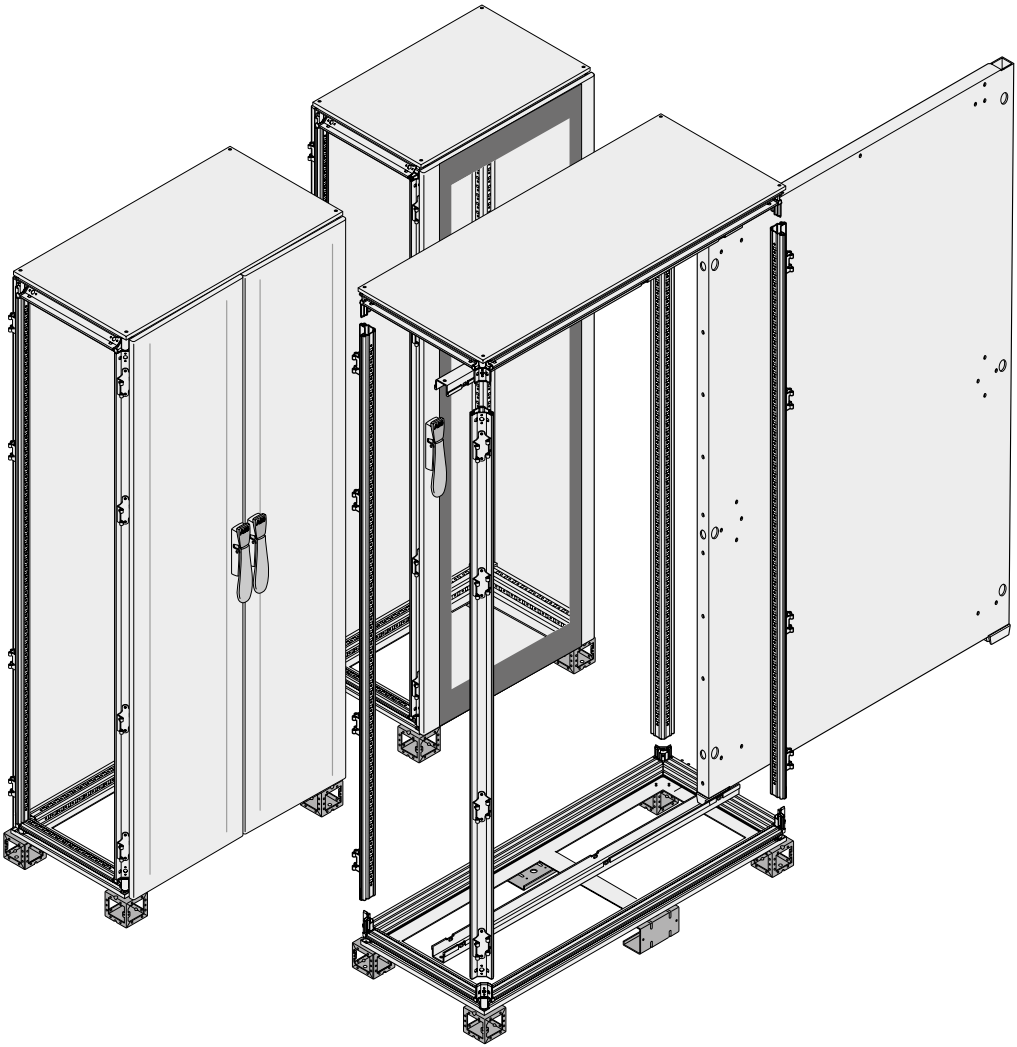

Power and productivity
for a better world™

IT ISTRUZIONI PER L'INSTALLAZIONE E LA MANUTENZIONE
Le operazioni di installazione, messa in servizio ed eventuale manutenzione ordinaria e straordinaria devono essere effettuate da personale qualificato, che abbia una conoscenza dettagliata dell'apparecchiatura.
ABB declina ogni responsabilità per danni a cose e persone dovute alla mancata osservanza delle istruzioni contenute in questo documento.
Per qualsiasi esigenza contattare **ABB**.

GB INSTALLATION AND MAINTENANCE INSTRUCTIONS
The operations for the installation, putting into service and routine and emergency maintenance of the unit must be performed by qualified personnel with a detailed knowledge of the unit.
ABB declines all responsibility for injury to people or damage to property resulting from a failure to comply with the instructions set out in this document.
Don't hesitate to contact **ABB** for any further information you may require.

DE INSTALLATIONS- UND WARTUNGSANLEITUNGEN
Die Arbeiten für die Installation, Inbetriebnahme, Wartung und Instandsetzung müssen von Fachpersonal ausgeführt werden, das über eine eingehende Kenntnis des Geräts verfügt.
ABB haftet nicht für Schäden an Sachen oder Personen aufgrund der Missachtung der in der vorliegenden Veröffentlichung enthaltenen Anweisungen.
Wenden Sie sich bitte für alle weiteren Fragen an **ABB**.

FR INSTRUCTIONS POUR L'INSTALLATION ET L'ENTRETIEN
Les opérations d'installation, de mise en service et, éventuellement, d'entretien ordinaire et extraordinaire doivent être effectuées par du personnel qualifié, ayant une connaissance approfondie de l'appareillage.
ABB décline toute responsabilité en cas de dommages causés à des personnes ou des biens dus au non-respect des instructions contenues dans ce document.
Pour toute exigence, contacter **ABB**.

ES INSTRUCCIONES DE INSTALACIÓN Y MANTENIMIENTO
Las operaciones de instalación, puesta en servicio y mantenimiento ordinario y extraordinario deben ser efectuadas por personal calificado, que posea un conocimiento del aparato.
ABB declina toda responsabilidad por daños a cosas y personas debidos al incumplimiento de las instrucciones contenidas en este documento.
Para cualquier exigencia ponerse en contacto con **ABB**.

BG ИНСТРУКЦИИ ЗА ИНСТАЛИРАНЕ И ПОДДРЪЖКА
Операциите по инсталиране, въвеждане в експлоатация и евентуална рутинна и извънредна поддръжка, трябва да се извършват от квалифициран персонал, които има задълбочени познания на апаратурата.
ABB не носи отговорност за щети на имущество или на хора, поради неспазване на инструкциите в този документ.
При всяка нужда, свържете се с **ABB**.

CS POKYNY PRO INSTALACI A ÚDRŽBU
Úkony spojené s instalací, uvedením do provozu a případnou běžnou i mimořádnou údržbou musí být prováděny kvalifikovaným personálem, který je detailně seznámen se zařízením.
ABB odmítá jakoukoli odpovědnost za ublížení na zdraví osob a za škody na majetku v důsledku nedodržení pokynů uvedených v tomto dokumentu.
V případě jakýchkoli potřeb se obraťte na firmu **ABB**.

DA INSTRUKTIONER VEDRØRENDE INSTALLATION OG VEDLIGEHOLDELSE
Indgrebene i forbindelse med installation, ibrugtagning og eventuel almindelig og ekstraordinær vedligeholdelse skal udføres af kvalificeret personale med indgående kendskab til apparatet.
ABB kan ikke gøres ansvarlig for materielle skader og kvæstelser som følge af manglende overholdelse af anvisningerne i dette dokument.
Kontakt **ABB** ved ethvert behov.

EL ΟΔΗΓΙΕΣ ΓΙΑ ΤΗΝ ΕΓΚΑΤΑΣΤΑΣΗ ΚΑΙ ΤΗ ΣΥΝΤΗΡΗΣΗ
Οι διαδικασίες εγκατάστασης, θέσης σε λειτουργία και η ενδεχόμενη τακτική και έκτακτη συντήρηση πρέπει να εκτελούνται από εξειδικευμένο προσωπικό, που γνωρίζει λεπτομερώς τη συσκευή.
Η **ABB** δεν φέρει καμία ευθύνη για τραυματισμούς σε ανθρώπους ή ζημιές που οφείλονται στην μη τήρηση των οδηγιών του παρόντος εγγράφου.
Για οποιαδήποτε απαίτηση απευθυνθείτε στην **ABB**.

ET PAIGALDUS- JA HOOLDUSJUHEND
Paigaldus, töökorda panek ja vajalikud jooksvaid ning erakorralised hooldustööd peavad olema läbi viidud kvalifitseeritud, seadet põhjalikult tundva, personali poolt.
ABB ei vastuta selles dokumendis sisalduvate juhiste eiramisest põhjustatud kahjude eest asjadele või inimestele.
Kõigis küsimustes võtke ühendust **ABB**-ga.

FI ASENNUS- JA HUOLTO-OHJEET
Ainoastaan ammattitaitoinen ja laitteen perusteellisesti tunteva henkilö saa suorittaa asennustyöt, käyttöönoton ja määräaikais- ja erikoishuollot.
ABB vapautuu kaikesta vastuusta materiaali- ja henkilövahinkojen osalta, jos ne ovat seurausta asiakirjan sisältämien ohjeiden noudattamatta jättämisestä.
Ota yhteys **ABB**-yritykseen kaikissa kysymyksissä.

HR UPUTE ZA INSTALACIJU I ODRŽAVANJEN
Poslove u vezi s instalacijom, puštanjem u rad i eventualnim redovnim i izvanrednim održavanjem mora obavljati kvalificirano osoblje koje detaljno poznaje uređaj.
ABB ne preuzima nikakvu odgovornost za materijalnu štetu i tjelesne ozljede do kojih je došlo zbog nepridržavanja uputa sadržanih u ovom dokumentu.
Za sve eventualne dodatne informacije molimo kontaktirajte **ABB**.

HU TELEPÍTÉSI ÉS KARBANTARTÁSI UTASÍTÁSOK
A telepítési-, üzembe helyezési-, valamint az esetleges rutin- és rendkívüli karbantartási munkálatokat kizárólag a készüléket alaposan ismerő szakemberek végezhetik!
Az **ABB** nem vállal felelősséget a jelen dokumentumban szereplő utasítások figyelmen kívül hagyása miatt bekövetkező dologi és személyi károkért!
Bármilyen kérdés esetén kérjük, vegye fel a kapcsolatot az **ABB** vállalattal!

LT INSTALIAVIMO IR PRIEŽIŪROS NURODYMAI
Įrenginį instaliuoti, įjungti, reguliariai tikrinti ar patikrinti nenumatytu atveju privalo tik kvalifikuoti asmenys, kurie gerai susipažinę su šiuo įrenginiu.
Jei nesilaikoma šiame dokumente aprašytų nurodymų, „**ABB**" neatsako už žmonėms ar turtui padarytą žalą.
Dėl papildomos informacijos galite kreiptis į „**ABB**".

LV UZSTĀDĪŠANAS UN APKOPES INSTRUKCIJAS
Darbības, kas saistītas ar uzstādīšanu, lietošanu, standarta un ārkārtas apkopi, ir jāveic kvalificētam speciālistam, kuram ir detalizētas zināšanas par ierīci.
ABB neuzņemas nekādu atbildību par personas veselībai vai mantai nodarīto kaitējumu, kas radies, neievērojot šī dokumenta instrukcijas.
Ja Jums ir nepieciešama palīdzība, lūdzam sazināties ar **ABB**.

NL AANWIJZINGEN VOOR DE INSTALLATIE EN HET ONDERHOUD
De handelingen voor de installatie, inbedrijfstelling en gewoon en buitengewoon onderhoud moeten verricht worden door vakbekwaam personeel, met gedetailleerde kennis van het apparaat.
ABB kan niet aansprakelijk gesteld worden voor schade of letsel veroorzaakt door de niet inachtneming van de aanwijzingen in dit document.
Voor nadere informatie contact opnemen met **ABB**.

NO INSTRUKSJONER FOR INSTALLASJON OG VEDLIKEHOLD
Installasjon, idriftsettelse og eventuelt ordinært og ekstraordinært vedlikehold må utføres av kvalifisert personale med veldig godt kjennskap til apparatet.
ABB fraskriver seg ethvert ansvar for skader på gjenstander og personer som skyldes manglende overhold av instruksjonene i dette dokumentet.
Kontakt **ABB** ved behov.

PL INSTRUKCJA INSTALOWANIA I KONSERWACJI
Czynności instalowania, przekazania do eksploatacji oraz konserwacji okresowych i awaryjnych aparatu muszą być wykonywane przez wykwalifikowany personel znający dokładnie dany aparat.
Firma **ABB** nie ponosi żadnej odpowiedzialności za obrażenia osób lub uszkodzenie mienia powstałe wskutek nie przestrzegania instrukcji podanych w niniejszym dokumencie.
W przypadku potrzeby uzyskania dodatkowych informacji prosimy skontaktować się z firmą **ABB**.

PT INSTRUÇÕES PARA A INSTALAÇÃO E A MANUTENÇÃO
AS operações de instalação, activação e eventual manutenção ordinária e extraordinária devem ser efectuadas por pessoal qualificado, com um conhecimento detalhado da aparelhagem.
A **ABB** declina qualquer responsabilidade por danos a coisas e pessoas devido à inobservância das instruções contidas neste documento.
Para qualquer informação, contactar a **ABB**.

RO INSTRUCȚIUNI DE INSTALARE ȘI ÎNTREȚINERE
Operațiunile de instalare, punere în funcțiune și eventuala întreținere obișnuită și extraordinară trebuie să fie efectuate de către un personal calificat, care să cunoască în detaliu echipamentul.
ABB declină orice responsabilitate privind daunele cauzate bunurilor și persoanelor, datorită nerespectării instrucțiunilor din prezentul document.
Pentru orice alte nelămuriri, contactați **ABB**.

SK POKYNY PRE INŠTALÁCIU A ÚDRŽBU
Úkony spojené s inštaláciou, uvedením do prevádzky a prípadnou bežnou i mimoriadnou údržbou musia byť vykonávané kvalifikovaným technikom, ktorý je detailne oboznámený so zariadením.
ABB odmieta akúkoľvek zodpovednosť za ublíženie na zdraví osôb a za škody na majetku v dôsledku nedodržania pokynov uvedených v tomto dokumente.
V prípade akýchkoľvek potrieb sa obráťte na firmu **ABB**.

SL NAVODILA ZA MONTAŽO IN VZDRŽEVANJE
Postopke montaže, dajanja v obratovanje in morebitnega rednega in izrednega vzdrževanja mora opravljati usposobljeno osebje, ki napravo podrobno pozna.
ABB zavrača vsako odgovornost za poškodbe ljudi ali stvari, ki so posledica neupoštevanja navodil v tem dokumentu.
V primeru potrebe se obrnite na **ABB**.

SV INSTALLATIONS- OCH UNDERHÅLLSANVISNING
Installationsmomenten, igångsättningen och eventuella ordinära och extraordinära underhåll ska utföras av kvalificerad personal som har en detaljerad kännedom om apparaten.
ABB avsäger sig allt ansvar för skador på saker och personer som orsakats på grund av bristande uppmärksamhet för anvisningarna i detta dokument.
Kontakta **ABB** för alla typer av problem.

TK KULLANIM VE BAKIM YÖNERGELERİ
Kurulum, hizmete alma ve olası olağan ve olağanüstü bakım işlemleri, teçhizat hakkında detaylı bilgisi olan kalifiye personel tarafından yürütümelidir.
ABB, işbu belgede yer alan yönergelere uyulmamasından dolayı insan ya da nesnelerde meydana gelebilecek zararlardan dolayı sorumluluk kabul etmemektedir.
Her türlü ihtiyaç durumunda **ABB** ile temasa geçin.

RU ИНСТРУКЦИЯ ПО УСТАНОВКЕ И ТЕХОБСЛУЖИВАНИЮ
Все операции по установке, вводу в эксплуатацию, текущему и внеплановому ремонту должны выполняться квалифицированным персоналом, подробно ознакомленным с прибором.
Фирма **ABB** снимает с себя всякую ответственность за повреждения, причиненные людям и/или предметам из-за несоблюдения указаний настоящей инструкции.
Для любого вопроса обратитесь к **ABB**.

ZH 安装及维护指南
断路器装置的安装、操作、常规维护及紧急维修工作必须由熟悉本装置的合格技术人员来完成。
若因不遵守以上操作规程而发生人员或财务受伤、受损，**ABB**概不负责。
若需要其他资料或信息，请随时与**ABB**联系。

AR إرشادات التركيب والصيانة
عمليات التركيب وبدء التشغيل والصيانة العادية والاستثنائية المحتملة هي عمليات يجب أن تتم فقط على يد طاقم عمل متخصص ومؤهل ومُعتمد يكون على دراية تفصيلية بالجهاز وبجميع مكوناته.
تُخلي شركة **ABB** مسؤوليتها عن أية أضرار أو تلفيات قد تصيب الأشخاص أو الأشياء جراء عدم مراعاة واحترام التعليمات والإرشادات والتوجيهات الواردة في هذه الوثيقة.
عند الضرورة اتصل بشركة **ABB**

Note

Montaggio con dado in gabbia (AD1036)
Utilizzabile nei fori rettangolari della struttura con vite o dado M6.

Coppia di serraggio (valido per tutti i componenti IS2 e non diversamente specificato): M5 = 5Nm - M6=5Nm - M6=9Nm - M8=20Nm - M10=30Nm - M12=40Nm.

Notes

Assembling with cage nut (AD1036)
It can be used in the rectangular bores of the structure with M6 screw or nut.

Min. fastening torque (to be applied to all IS2 components, if not differently specified): M5 = 5Nm - M6=5Nm - M6=9Nm - M8=20Nm - M10=30Nm - M12=40Nm.

Anmerkungen

Montage mit Käfig-Mutter (AD1036)
In der Rechtecklöchern der Struktur mit Schraube oder Mutter M6.

Anzugsmoment (für alle IS2 -Komponenten gültig, soweit nicht anders angegeben): M5 = 5Nm - M6=5Nm - M6=9Nm - M8=20Nm - M10=30Nm - M12=40Nm.

Informations

Montage par écrou clips (AD1036)
S'insére dans les trous rectangulaires de la structure par vis écrou M6.

Couple de serrage (valable pour tout les composants IS2, sauf différents renseignements): M5 = 5Nm - M6=5Nm - M6=9Nm - M8=20Nm - M10=30Nm - M12=40Nm.

Notas

Montaje con tuerca en jaula (AD1036)
Puede montarse en los agujeros rectangulares de la estructura con tornillo o tuerca M6.

Par de torsión (válido para todos los componentes *IS2*, si no viene especificado otro valor): *M5 = 5Nm - M6=5Nm - M6=9Nm - M8=20Nm - M10=30Nm - M12=40Nm.*

Observações

Montagem com porca em gaiola metálica (AD1036)
Utilizável nos orifícios retangulares da estrutura com parafusos M6.

Binário aperto (válido para todos os componentes *IS2*, salvo determinação em contrário) *M5 = 5Nm - M6=5Nm - M6=9Nm - M8=20Nm - M10=30Nm - M12=40Nm.*

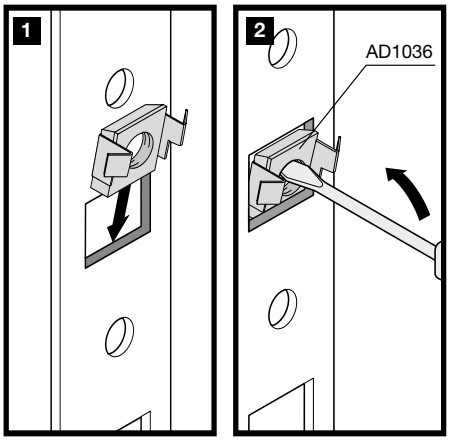

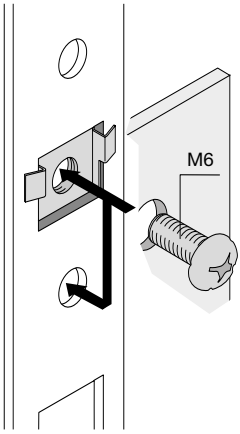

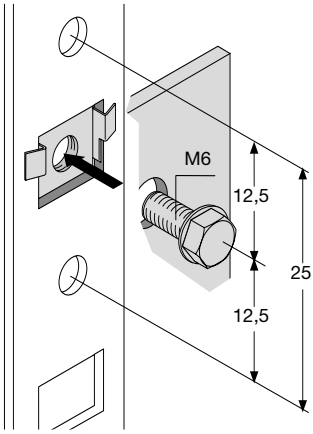

Sommario
Summary
Übersicht
Sommaire
Índice
Índice

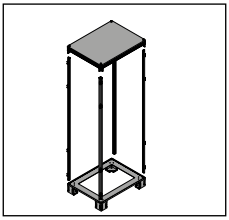

EK1010KN-EK1040KN-EK1050KN-EK1060KN-EK1080KN-EK1240KN-EK1250KN-EK1260KN-EK1280KN-EK3040KN-EK3050KN-EK3060KN-EK3080KN-EK4010KN-EK4040KN-EK4050KN-EK4060KN-EK4080KN-EK6010KN-EK6040KN-EK6050KN-EK6060KN-EK6080KN-EK8010KN-EK8040KN-EK8050KN-EK8060KN-EK8080KN-EM1800-EM2000-EM2200 11

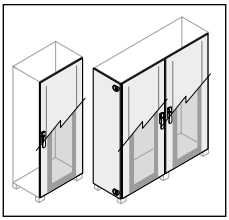

EC1810K-EC1811K-EC1831K-EC1840K-EC1841K-EC1851K-EC1860K-EC1861K-EC1880FC5K-EC1880FC6K-EC1880FC8K-EC1880FV6K-EC1880FV8K-EC1880K-EC1880VC2K-EC1880VC4K-EC1881K-EC1882-EC1884-EC2011K-EC2012K-EC2031K-EC2040K-EC2041K-EC2051K-EC2060EMCKM-EC2060K-EC2061K-EC2080EMCKM-EC2080FC5K-EC2080FC6K-EC2080FC8K-EC2080FV6K-EC2080FV8K-EC2080K-EC2080VC2K-EC2080VC4K-EC2081K-EC2082-EC2084-EC2210K-EC2211K-EC2232K-EC2240K-EC2241K-EC2251K-EC2260K-EC2261K-EC2280FC5K-EC2280FC6K-EC2280FC8K-EC2280FV6K-EC2280FV8K-EC2280K-EC2280VC2K-EC2280VC4K-EC2281K-EC2282-EC2284-ET1810K-ET1860K-ET1880K-ET2010K-ET2060EMCKM-ET2060K-ET2080EMCKM-ET2080K-ET2211K-ET2260K-ET2280K-EV1030-AD1058-AA6200-AA8004-PIRH0455-PIRH2432-PIRH1242-PIRH0405-AA6160-AA1570-AA6120-AA1560-AA6140-AA6141-AA6180-AA6190 ..... 12/13

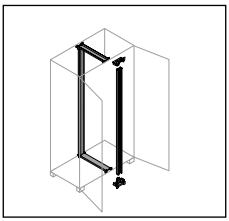

EB4100-EB5100-EB6100-EB8100-EB1100-EM1803-EM2003-EM2203-EM1811-EM2011-EM2211 14

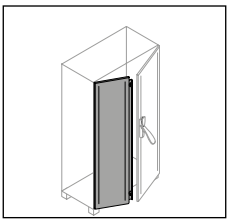

ED1802SK-ED1804SK-ED1810SK-ED1812SK-ED1816SK-ED2002SK-ED2004SK-ED2010SK-ED2012SK-ED2016SK-ED2202SK-ED2204SK-ED2210SK-ED2212SK-ED2216SK 15

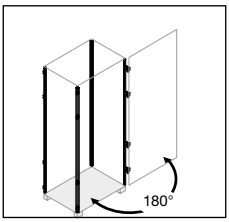

EV0118-EV0120-EV0122-CR0181 ..... 16/17

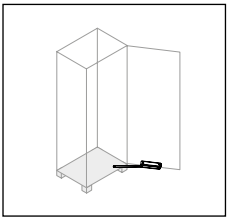

EV0005

18

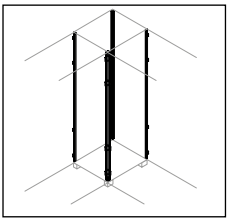

EM1805-EM2005-EM2205

19

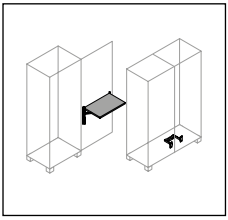

EV1160-EV1060K-EV1061K

20/21

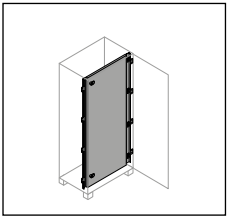

EE1810K-EE1860K-EE1880K-EE1906K-EE1908K-EE1910K-EE2010K-EE2060K-EE2080K-EE2106K-EE2108K-EE2110K-EE2210K-EE2260K-EE2280K-EE2306K-EE2308K-EE2310K

22

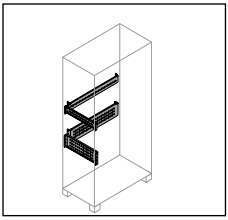

EB0400-EB0440-EB0500-EB0550-EB0600-EB0660-EB0800-EB0880-EB1000-EB1010-EB1011-EB1020-EB1060-EB1080-EB1200-EB4810-EB4860-EB4880

23

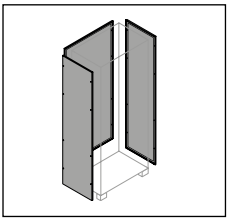

EL1810K-EL1811K-EL1840K-EL1841K-EL1850K-EL1851K-EL1860K-EL1861K-EL1880K-EL1881K-EL2011K-EL2012K-EL2040K-EL2041K-EL2050K-EL2051K-EL2060EMCK-EL2060K-EL2061K-EL2080EMCK-EL2080K-EL2081K-EL2210K-EL2211K-EL2240K-EL2241K-EL2250K-EL2251K-EL2260K-EL2261K-EL2280K-EL2281K

24

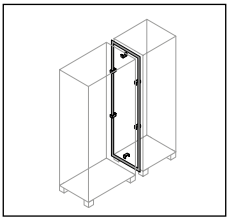

EV0003-EV0006-EV0002-EV0008

25/26

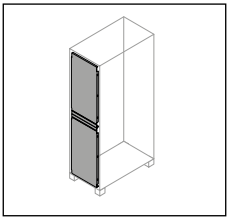

EE1811-EE1841-EE1851-EE1861-EE1881-EE2011-EE2041-EE2051-EE2061-EE2081-EE2211-EE2241-EE2251-EE2261-EE2281

27

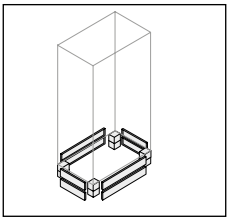

EZ1001-EZ1201-EZ1601-EZ4001-EZ6001-EZ8001-ZN0006-ZN0006-ZN0008-ZN0008-ZN0010-ZN1000-ZN1001-ZN1002-ZN1010-ZN1020-ZN1040-ZN1041-ZN1200-ZN3000-ZN4000-ZN4001-ZN4002-ZN5000-ZN5001-ZN5002-ZN6000-ZN6000-ZN6001-ZN6002-ZN8000-ZN8000-ZN8001-ZN8002

28/29

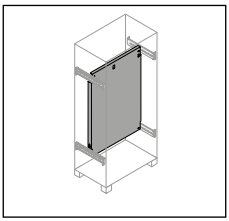

EA1061-EA1081-EA2062-EA2081-EA2101-EA3061-EA3081-EA4061-EA4081-EA5061-EA5081-EA6061-EA6081-EA8061-EA8081

30

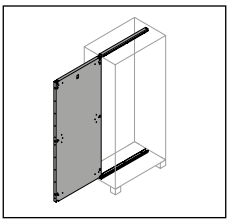

EA0400-EA0600-EA0802-EA1000-EA1200-EA1602-EA1910-EA1912-EA1916-EA1940-EA1960-EA1981-EA2110-EA2112-EA2116-EA2140-EA2161-EA2180-EA2310-EA2312-EA2316-EA2340-EA2360-EA2380

31

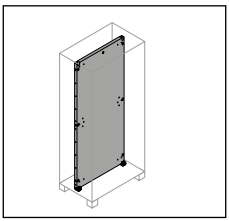

EA1810-EA1812-EA1817-EA1841-EA1860-EA1880-EA2010-EA2013-EA2016-EA2040-EA2060-EA2080-EA2100-EA2115-EA2117-EA2210-EA2212-EA2216-EA2240-EA2260-EA2280-EX1860-EX1880-EX2060-EX2080-EX2260-EX2280-GD1520-GD1530

32/33

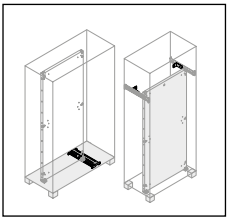

EA2102-EB1101-EB4101-EB5101-EB6101-EB8101

34/35

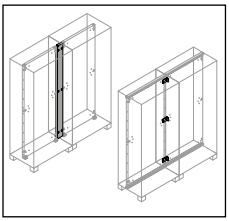

EA1800-EA2000-EA2113-EA2118-EA2200

36/37

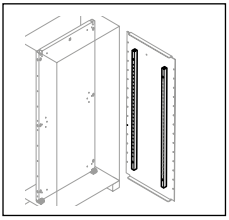

EA0018-EA0020-EA0022

38

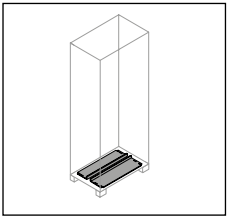

EF1010-EF1011-EF1012-EF1040-EF1041-EF1042-EF1051-EF1052-EF1053-EF1060-EF1061-EF1062-EF1080-EF1081-EF1082-EF4010-EF4011-EF4012-EF4040-EF4041-EF4042-EF4050-EF4051-EF4052-EF4060-EF4061-EF4063-EF4080-EF4081-EF4082-EF6010-EF6011-EF6012-EF6040-EF6041-EF6043-EF6050-EF6051-EF6052-EF6060-EF6061-EF6062-EF6080-EF6081-EF6082-EF8010-EF8011-EF8012-EF8040-EF8041-EF8042-EF8050-EF8051-EF8052-EF8060-EF8061-EF8062-EF8080-EF8081-EF8082

39

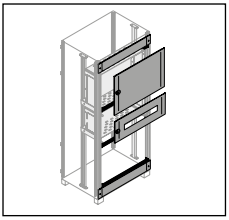

EH1060-EH1061K-EH1080-EH1081K-EH2060-EH2061K-EH2067K-EH2081K-EH2087K-EH2180-EH3060-EH3061K-EH3080-EH3081K-EH4061K-EH4063-EH4080-EH4081K-EH5060-EH5061K-EH5080-EH5081K-EH6010K-EH6060-EH6061K-EH6080-EH6083K-EH7262K-EH7282K-EH7284K-EH8010K-EH8060-EH8062K-EH8080-EH8081K-EM1802-EM2002-EM2202

40

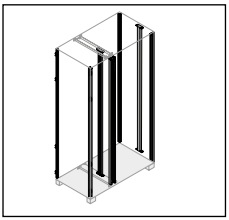

EH1060-EH1061K-EH1080-EH1081K-EH2060-EH2061K-EH2067K-EH2081K-EH2087K-EH2180-EH3060-EH3061K-EH3080-EH3081K-EH4061K-EH4063-EH4080-EH4081K-EH5060-EH5061K-EH5080-EH5081K-EH6010K-EH6060-EH6061K-EH6080-EH6083K-EH7262K-EH7282K-EH7284K-EH8010K-EH8060-EH8062K-EH8080-EH8081K-EM1803-EM2003-EM2203

42

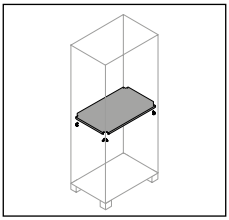

EE1001K-EE1002K-EE1003K-EE1004K-EE1011-EE1041-EE1051-EE1061-EE1081-EE4041-EE4051-EE6041-EE6051-EE6061-EE8041-EE8051-EE8061-EE8081

44

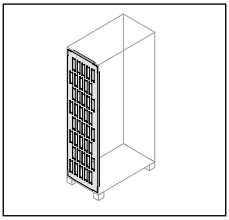

EE0024-EE1852-EE1862-EE2052-EE2062-EE2252-EE2262-EE2406-EE2410-EE2416

45

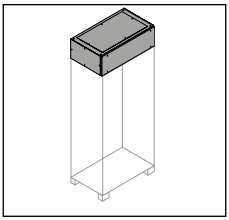

ER1000-ER1010K-ER1041K-ER1050K-ER1060K-ER1080K-ER4011K-ER4040K-ER4050K-ER4060K-ER4080K-ER6010K-ER6040K-ER6050K-ER6060K-ER6080K-ER8010K-ER8040K-ER8050K-ER8061K-ER8080K

46

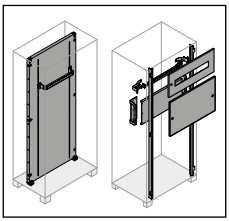

EH0018-EH0024-EH0029-EH0036-EH0562K-EH0582K-EH1062K-EH1082K-EH1518K-EH1524K-EH1529K-EH1536K-EH1562K-EH1582K-EH1800-EH2000-EH2018K-EH2024K-EH2029K-EH2036K-EH2062K-EH2065-EH2082K-EH2085-EH2200-EH2272K-EH2297K-EH2472K-EH3018K-EH3029K-EH3063K-EH3065-EH3082K-EH3085-EH3272K-EH3296K-EH3472K-EH4062K-EH4065-EH4082K-EH4085-EH5062K-EH5082K-EH6018K-EH6025K-EH6029K-EH6036K-EH6062K-EH6082K-EX1860-EX1880-EX2060-EX2080-EX2260-EX2280

47/48/49

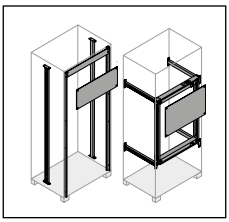

EG0500K-EG0900K-EG1300K-EG1800-EG1880-EG1902-EG1903-EG1904-EG1905-EG1906-EG1907-EG1908-EG1909-EG1910-EG1911-EG1912-EG1913-EG1914-EG1915-EG1916-EG1917-EG1918-EG1920-EG1991-EG1999-EG2000-EG2080-EG2200-EG2280-EM1804-EM2004-EM2204

50/51

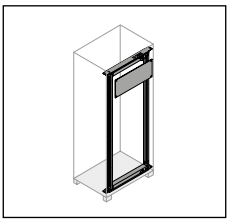

EG1801K-EG1902-EG1903-EG1904-EG1905-EG1906-EG1907-EG1908-EG1909-EG1910-EG1911-EG1912-EG1913-EG1914-EG1915-EG1916-EG1917-EG1918-EG1920-EG1991-EG1999-EG2001K-EG2201K

52

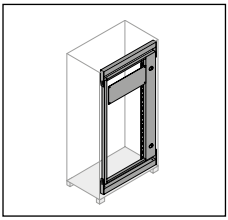

EG1803K-EG1902-EG1903-EG1904-EG1905-EG1906-EG1907-EG1908-EG1909-EG1910-EG1911-EG1912-EG1913-EG1914-EG1915-EG1916-EG1917-EG1918-EG1920-EG1991-EG1999-EG2003K-EG2203K

.....53

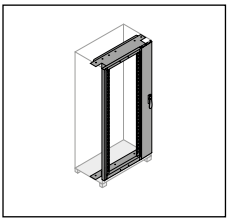

EG1804K-EG2204K-EG2004K-EV0007

.....54

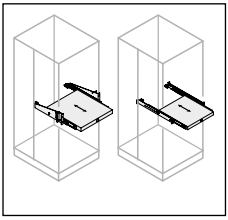

EV3500-EV5000

.....56/57

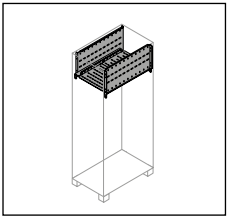

EE0240-EE0250-EE0260-EE0280-EE0340-EE0355-EE0360-EE0380-EE0440-EE0450-EE0460-EE0480-EE0640-EE0650-EE0660-EE0680-EE0840-EE0850-EE0860-EE0880-EE1040-EE1050-EE1060-EE1080-EE2020-EE2030-EE2040-EE2100-EE2600-EE2800

.....58

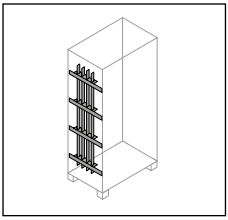

EB0400-EB0600-EB0800-EB1000-EB0500-PB0803-PB1603-BP0630-BP0632-BP1250-BP1600-AD1065 AD1067-BA0400-BA0800-BA1250-BA1600-AD1068-AD1069-BA0400-BA0800-BA1250-BA1600-EV1122 EV1123-EV1124-EV1125-EV1147-EV1148

.....61/62/63/64

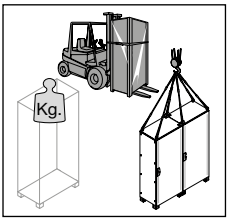

AA9610-EV0002-EV0003-EV0006-EV0008-EV1004-EV1005-EV1006-EV1007-EZ1001-EZ1201-EZ1601-EZ4001 EZ6001-EZ8001-TU1000

.....65/66/67/68/69/70

EK1010KN-EK1040KN
EK1050KN-EK1060KN
EK1080KN-EK1240KN
EK1250KN-EK1260KN
EK1280KN-EK3040KN
EK3050KN-EK3060KN
EK3080KN-EK4010KN
EK4040KN-EK4050KN
EK4060KN-EK4080KN
EK6010KN-EK6040KN
EK6050KN-EK6060KN
EK6080KN-EK8010KN
EK8040KN-EK8050KN
EK8060KN-EK8080KN

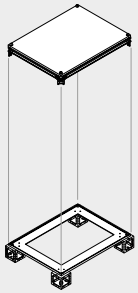

EM1800-EM2000-EM2200

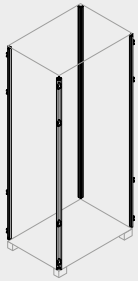

8x **16**xM10

FRONTE/RETRO QUADRO
FRONT/BACK POST
VORDERSEITE/SCHALTSCHRANK-RÜCKSEITE
MONTANTES AVANTS/ARRIÈRES
MONTANTES DELANTEROS/TRASEROS
MONTANTES ANTERIORES/TRASEIROS

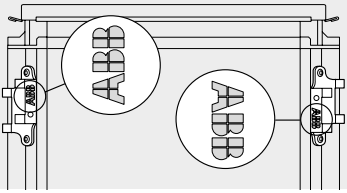

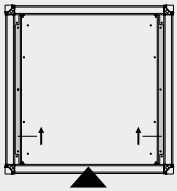

FRONTE QUADRO
FRONT POST
VORDERSEITE -RÜCKSEITE
MONTANTES AVANTS
MONTANTES DELANTEROS
MONTANTES ANTERIORES

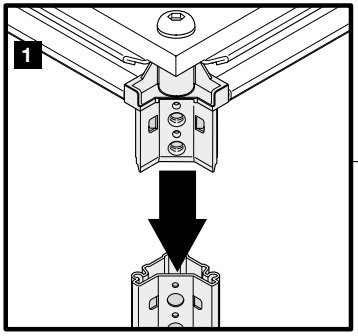

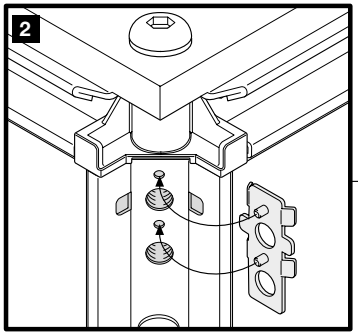

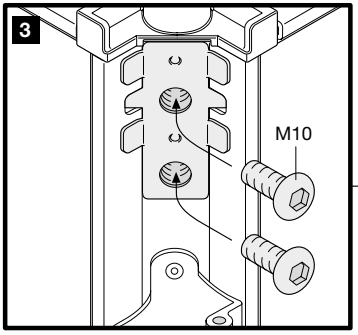

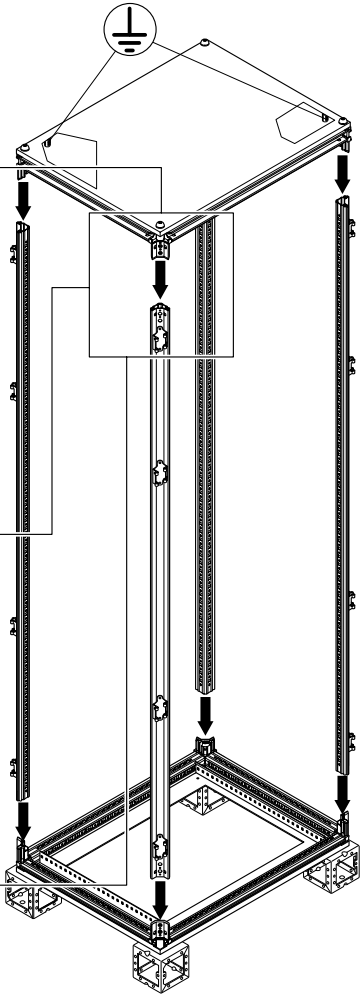

EC1831K-EC1840K-EC1860K
EC1880K-EC1810K-EC2031K
EC2040K-EC2060K-EC2080K
EC2012K-EC2232K-EC2240K
EC2260K-EC2280K-EC2210K
ET1860K-ET1880K-ET1810K
ET2060K-ET2080K-ET2010K
ET2260K-ET2280K-ET2211K
EC1882-EC2082-EC2282
EC1884-EC2084-EC2284

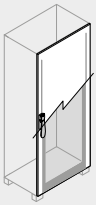

4x

EC1880VC2K-EC2080VC2K
EC2280VC2K-EC1880VC4K
EC2080VC4K-EC2280VC4K
EC1880FC5K-EC2080FC5K
EC2280FC5K-EC1880FC6K
EC2080FC6K-EC2280FC6K
EC1880FC8K-EC2080FC8K
EC2280FC8K-EC1880FV6K
EC2080FV6K-EC2280FV6K
EC1880FV8K-EC2080FV8K
EC2280FV8K

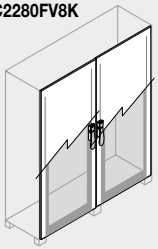

4x

EC1841K-EC1851K-EC1861K
EC1881K-EC1811K-EC2041K
EC2051K-EC2061K-EC2081K
EC2011K-EC2241K-EC2251K
EC2261K-EC2281K-EC2211K

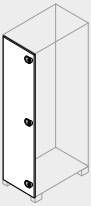

4x

1

L ≥500mm

2

1

90mm

M6

EB1041-EB1042-EB1043

2xM6

AA1560-AA1570-AA6120
AA6140-AA6141-AA6160
AA6180-AA6190-AA6200
AA8004-AD1058-EV1030
PIRH0405-PIRH0455
PIRH1242-PIRH2432

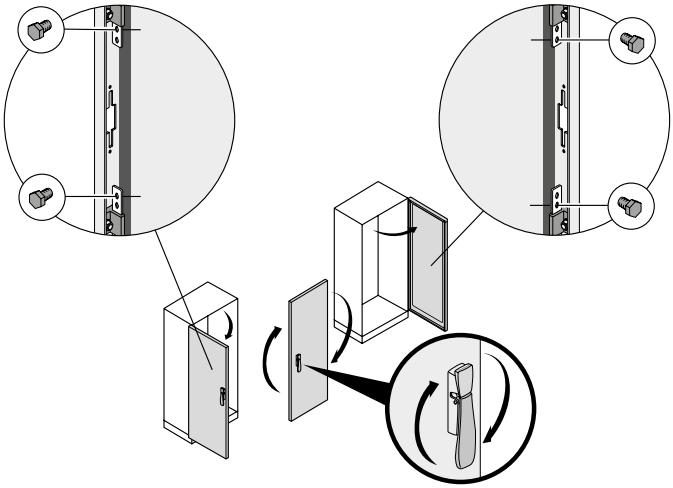

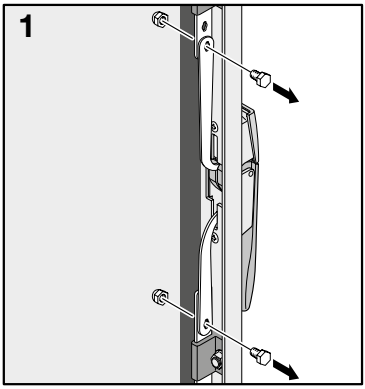

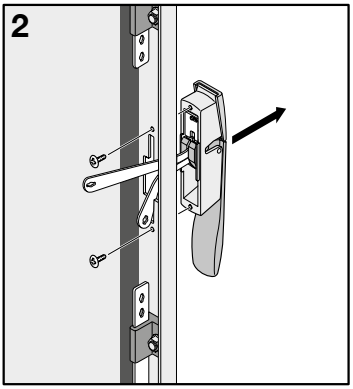

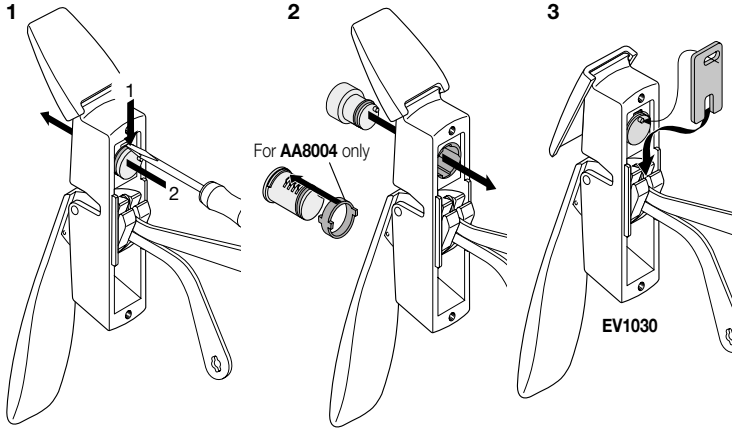

EM1811-EM2011-EM2211

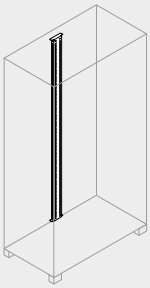

4xM6

EM1803-EM2003-EM2203

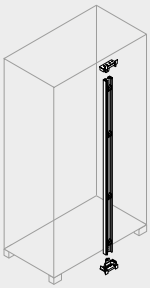

6xM6 **2**x

EB4100-EB5100-EB6100
EB8100-EB1100

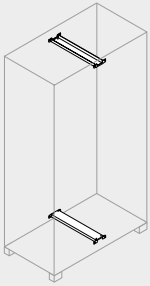

8xM6

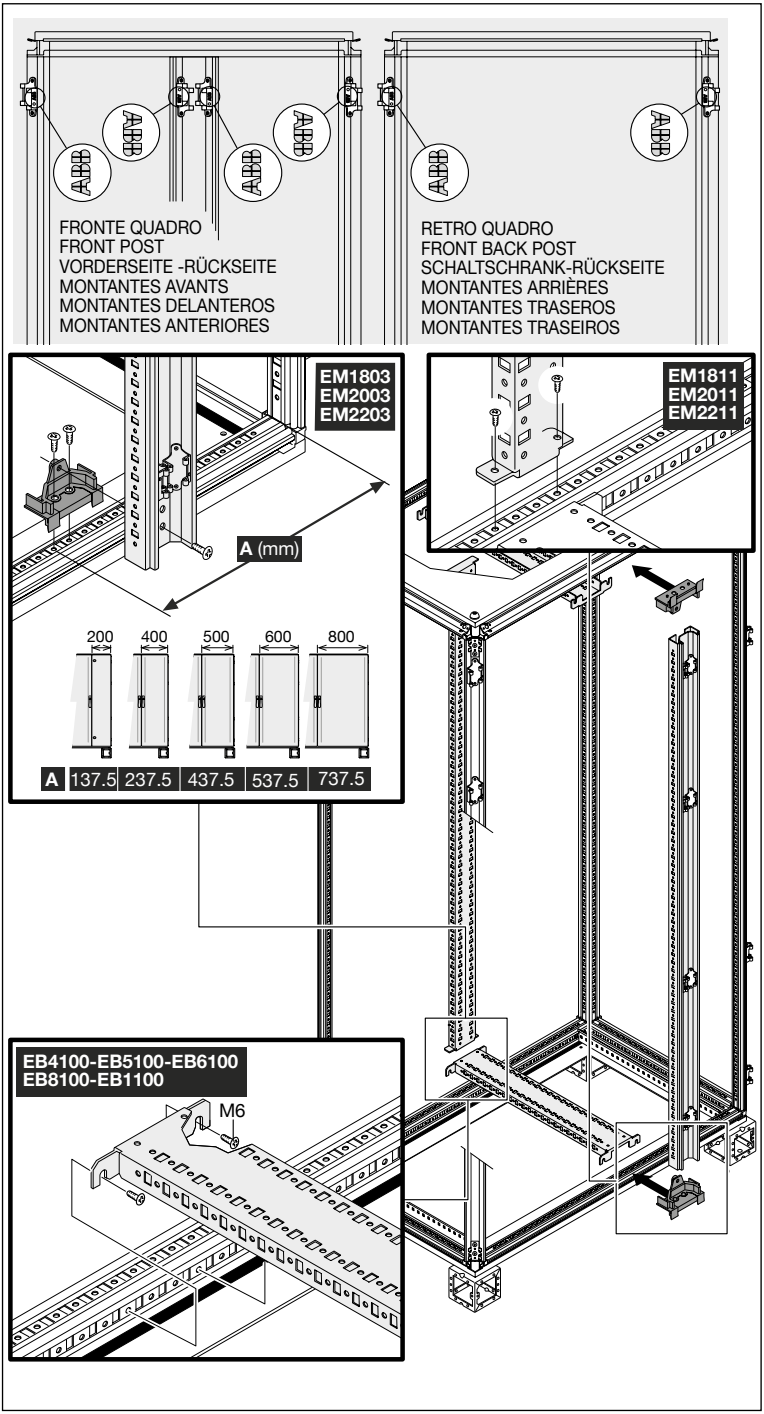

ED1802SK-ED1804SK
ED1810SK-ED1812SK
ED1816SK-ED2002SK
ED2004SK-ED2010SK
ED2012SK-ED2016SK
ED2202SK-ED2204SK
ED2210SK-ED2212SK
ED2216SK

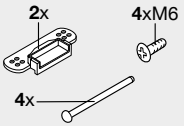

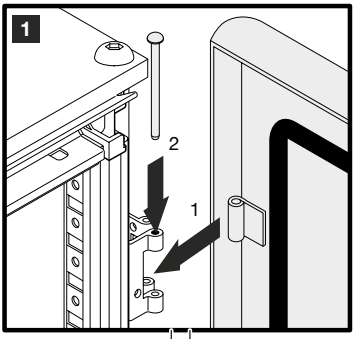

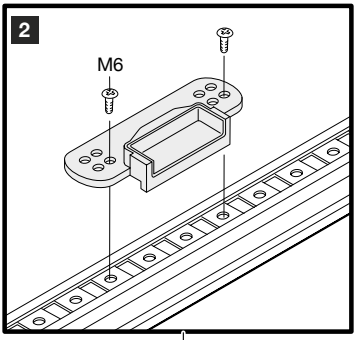

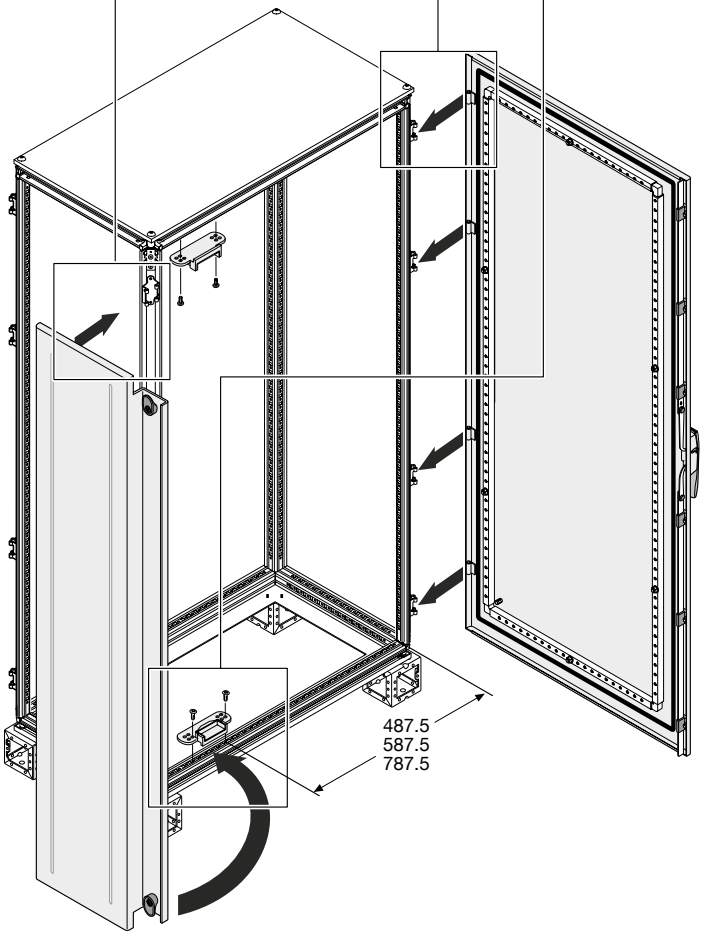

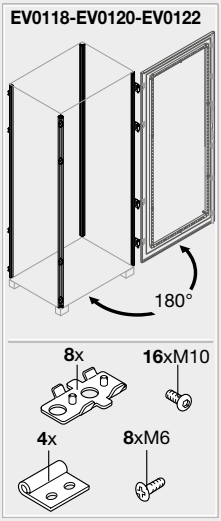
EV0118-EV0120-EV0122
180°
8x
16xM10
4x
8xM6

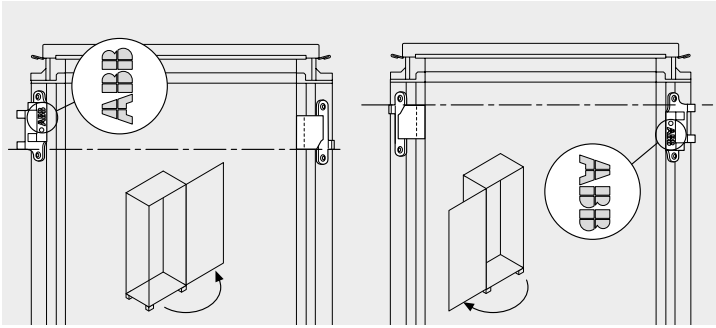
ABB
ABB

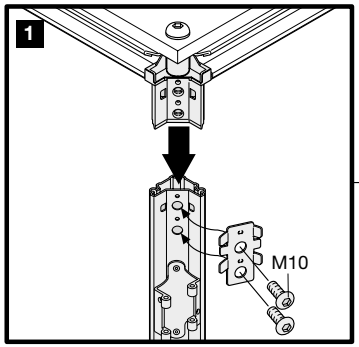
1
M10

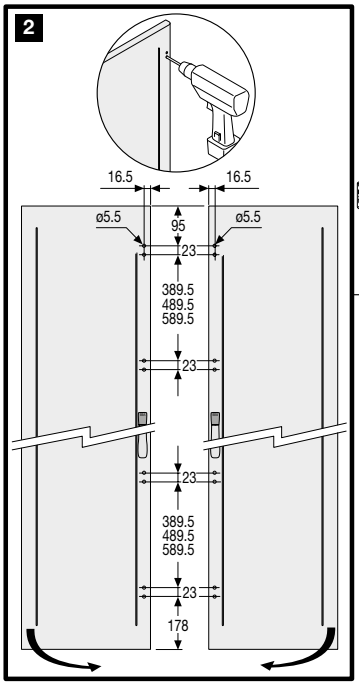
2
16.5
16.5
ø5.5
ø5.5
95
23
389.5
489.5
589.5
23
23
389.5
489.5
589.5
23
178

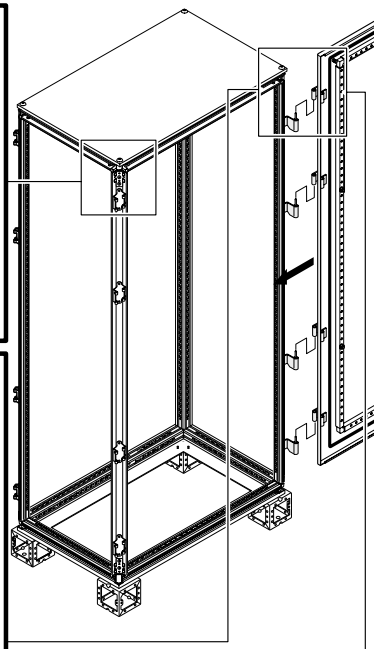

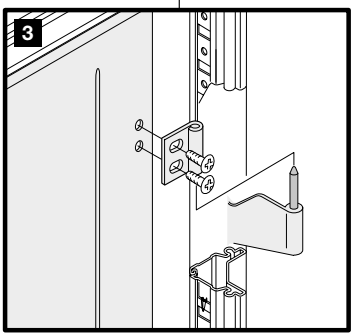
3

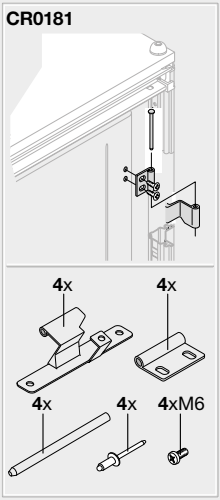
CR0181
4x
4x
4x
4x
4xM6

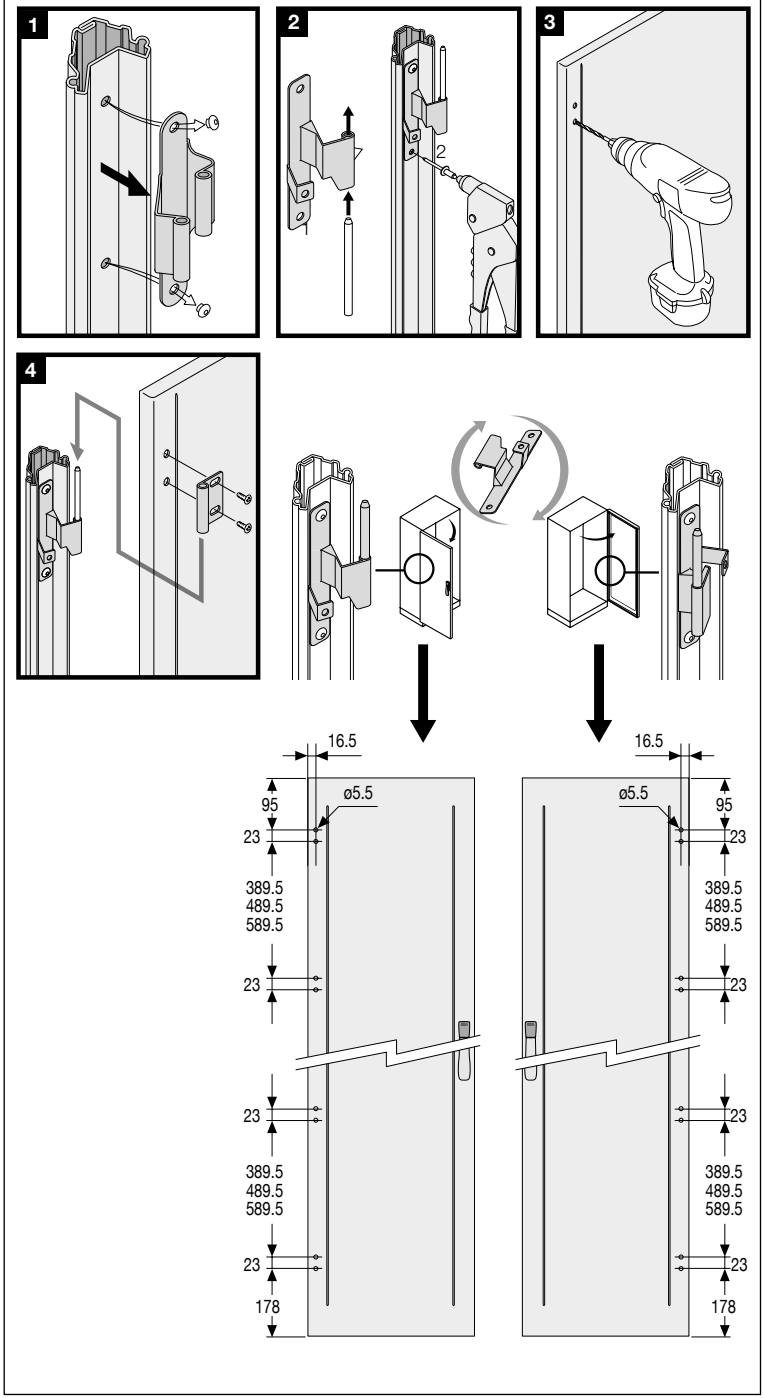
1
2
2
3
4
16.5
ø5.5
95
23
389.5
489.5
589.5
23
23
389.5
489.5
589.5
23
178
16.5
ø5.5
95
23
389.5
489.5
589.5
23
23
389.5
489.5
589.5
23
178

EV0005

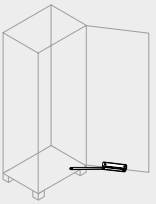

2xM6 **1**x

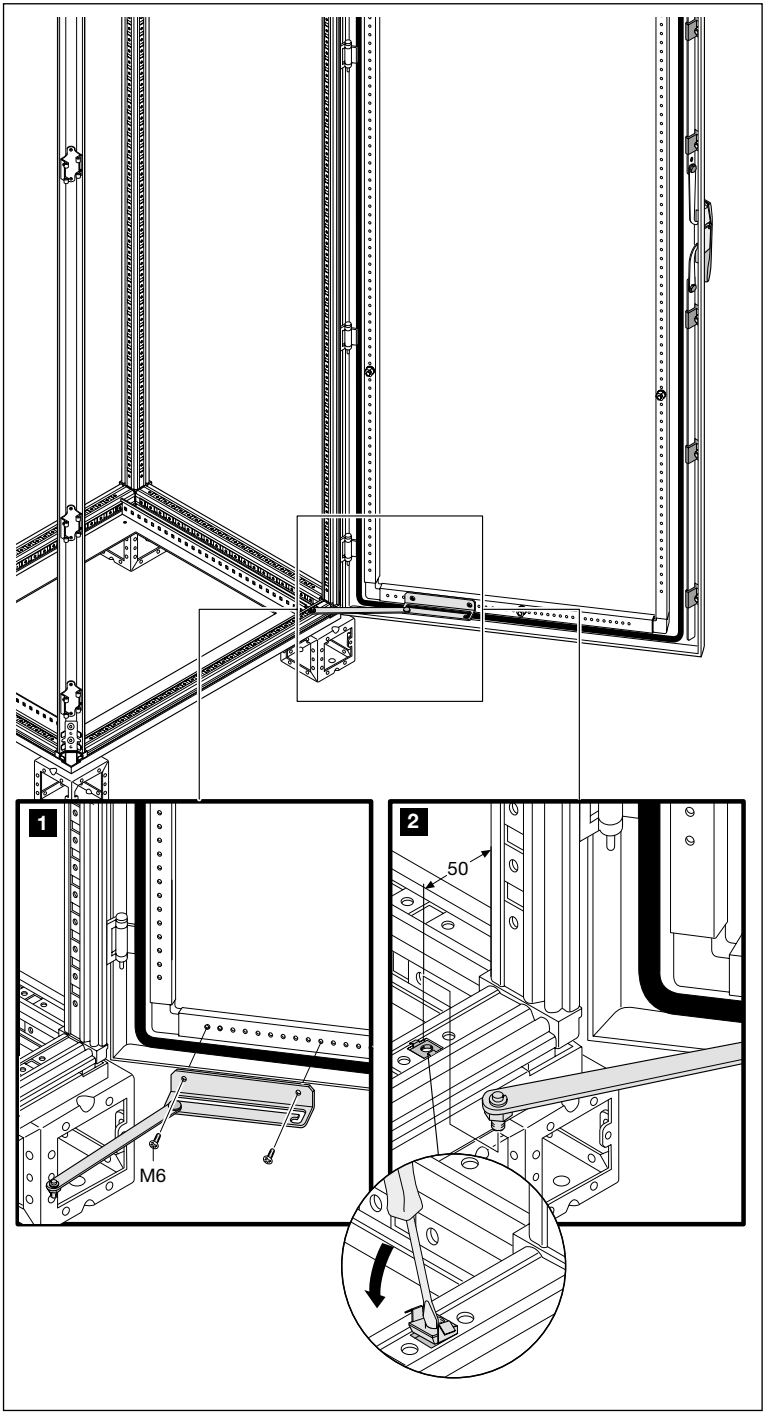

EM1805-EM2005
EM2205

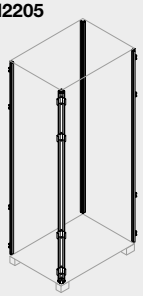

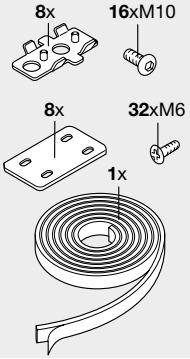

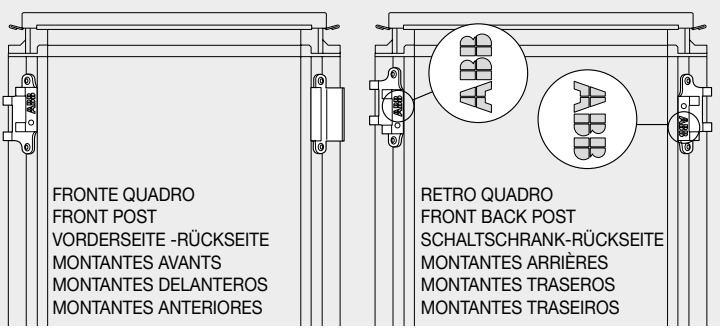

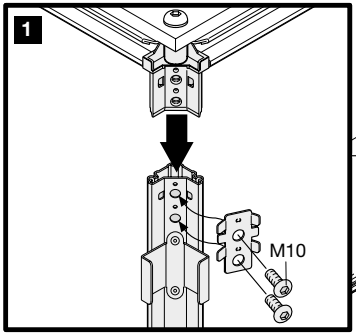

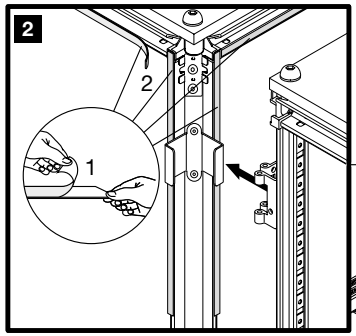

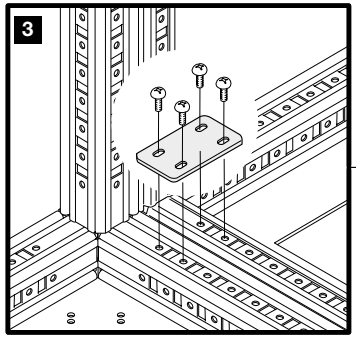

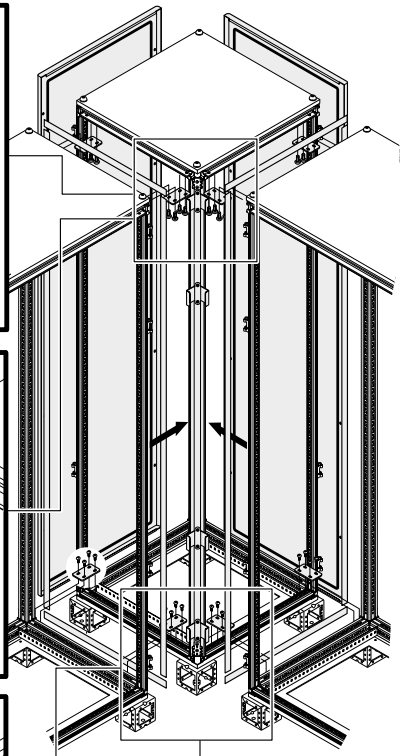

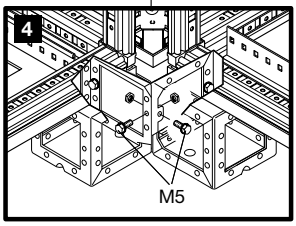

EV1160

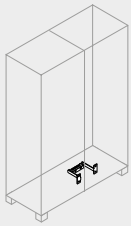

2x

6xM6

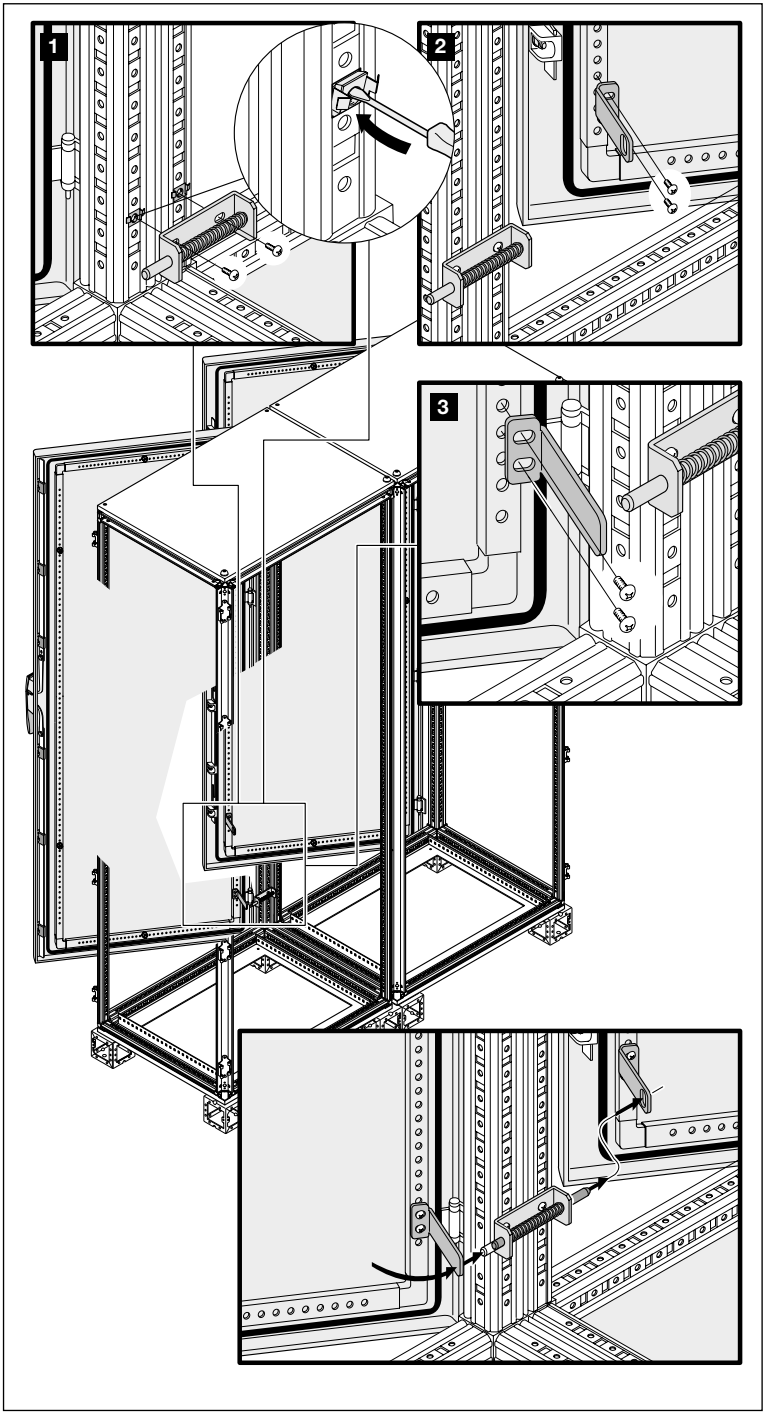

EV1060K-EV1061K

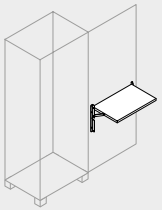

8xM6 **2**xM6

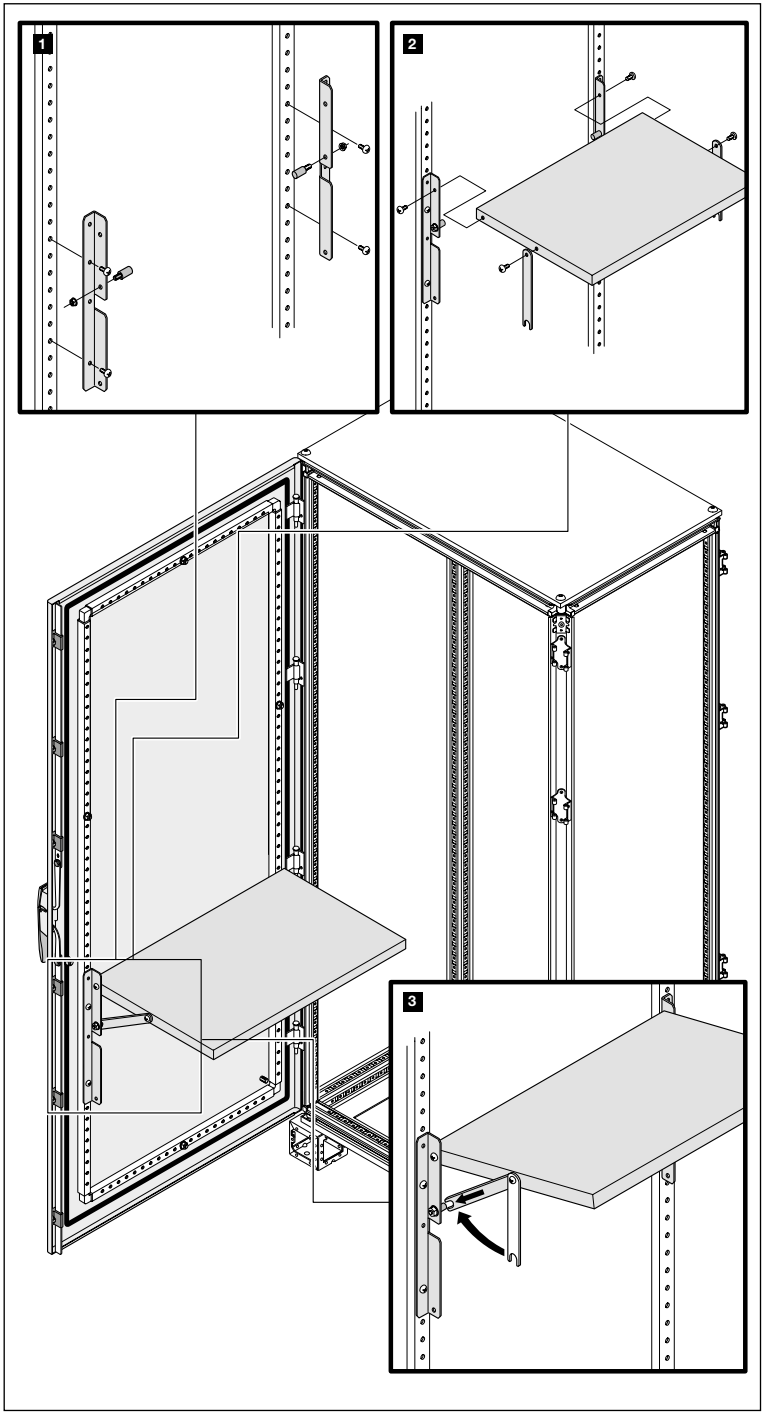

EE1860K-EE1880K-EE1810K
EE2060K-EE2080K-EE2010K
EE2260K-EE2280K-EE2210K

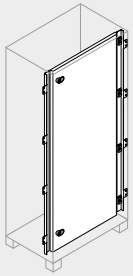

EE1906K-EE1908K-EE1910K
EE2106K-EE2108K-EE2110K
EE2306K-EE2308K-EE2310K

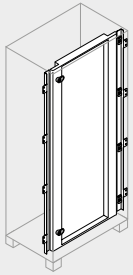

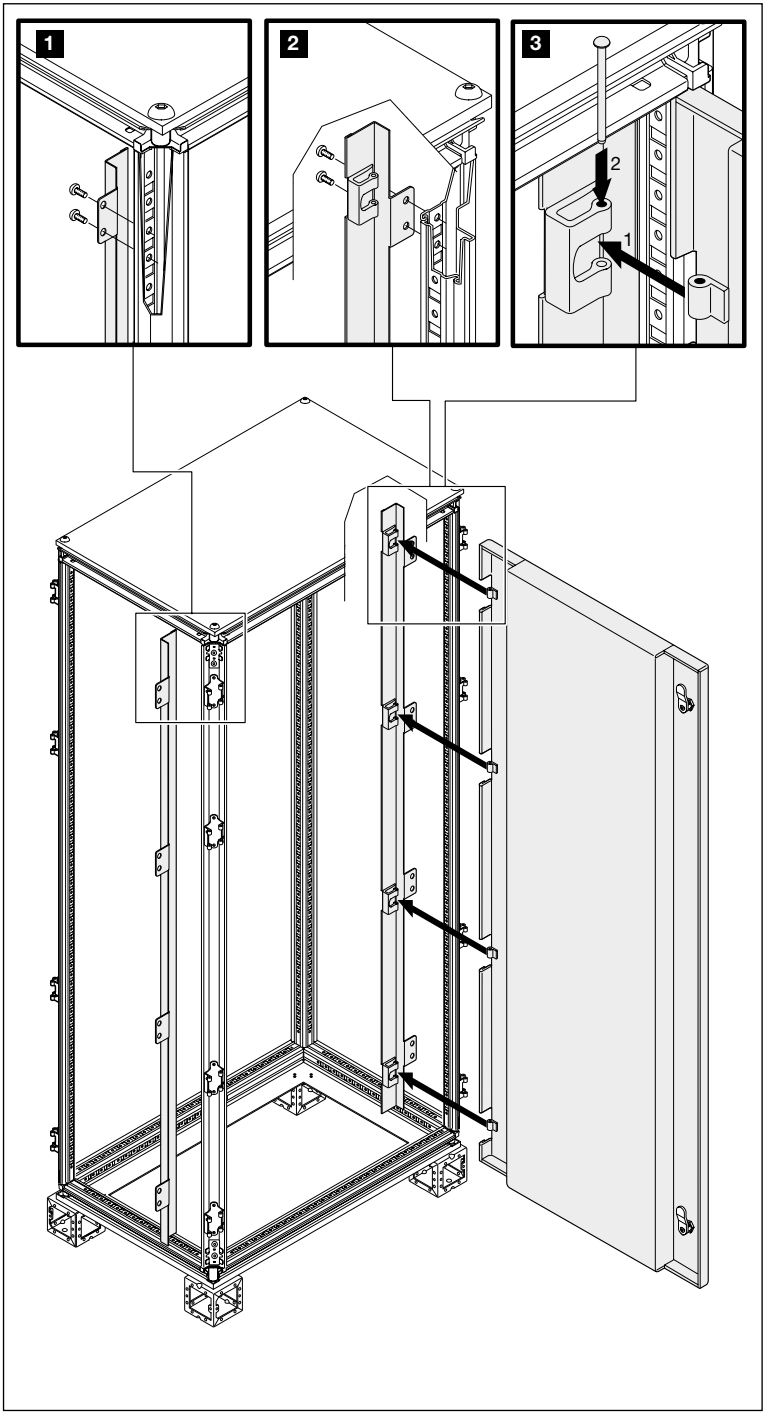

EB0400-EB0500-EB0600
EB0800-EB1000-EB1200
EB0440-EB0550-EB0660
EB0880-EB1010-EB1220

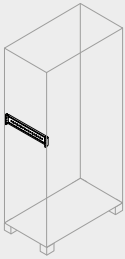

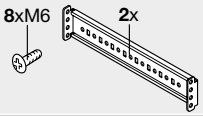

EB4860-EB4880-EB4810
EB1060-EB1080-EB1011

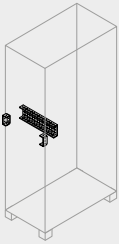

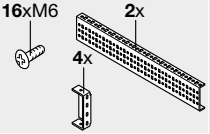

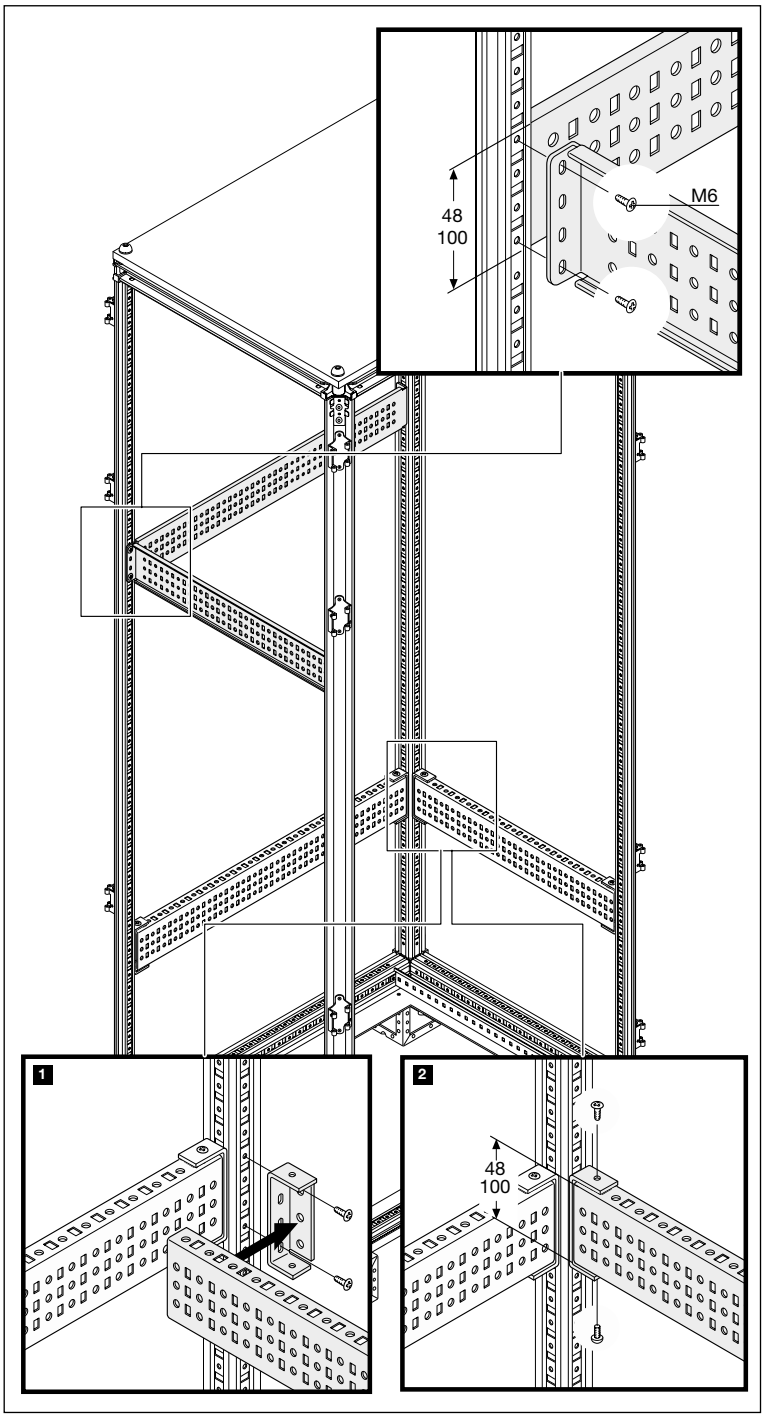

EL1840K-EL1850K-EL1860K
EL1880K-EL1810K-EL2040K
EL2050K-EL2060K-EL2080K
EL2012K-EL2240K-EL2250K
EL2260K-EL2280K-EL2210K

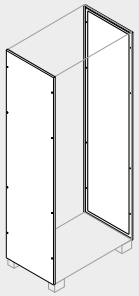

16xM6

EP1840K-EP1860K-EP1880K
EP1810K-EP1812K-EP2040K
EP2060K-EP2080K-EP2010K
EP2012K-EP2240K-EP2260K
EP2280K-EP2210K-EP2212K

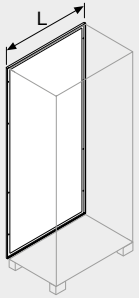

L≤ 1000mm

8xM6

L≥ 1200mm

10xM6

4xM6

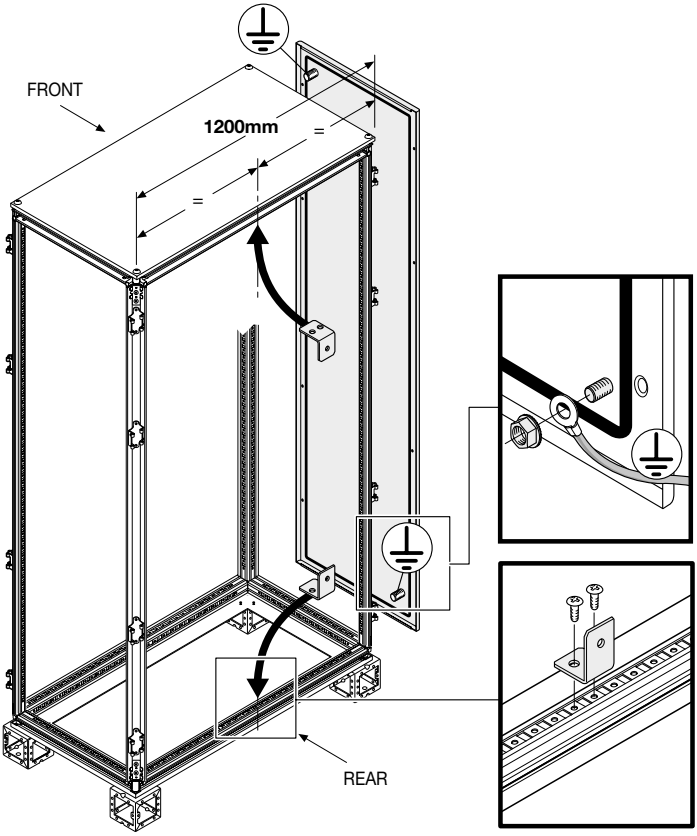

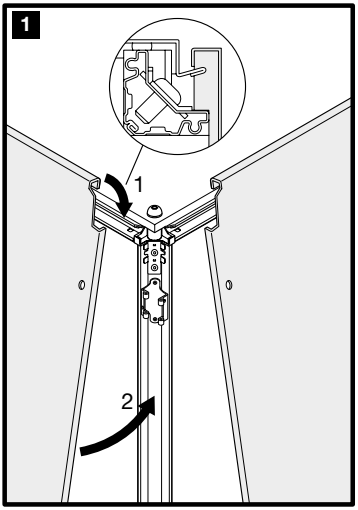

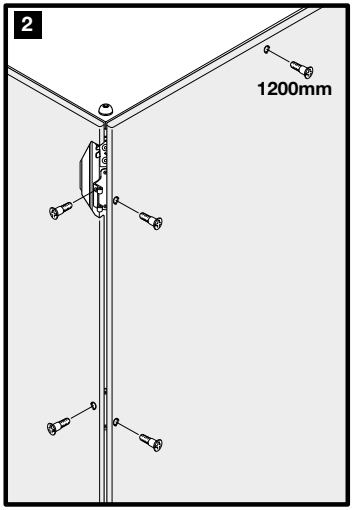

EV0003	OK	OK	OK	OK	OK	OK	OK	OK	OK	OK
EV0002	OK			OK	OK	OK		OK	OK	OK
EV0006	OK	OK	OK			OK				

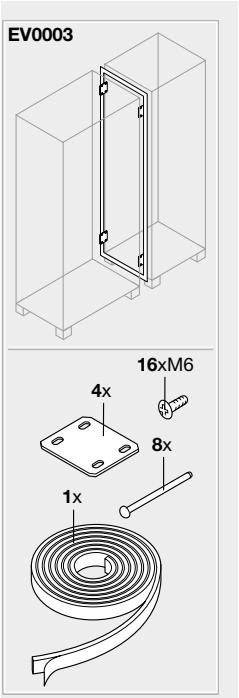

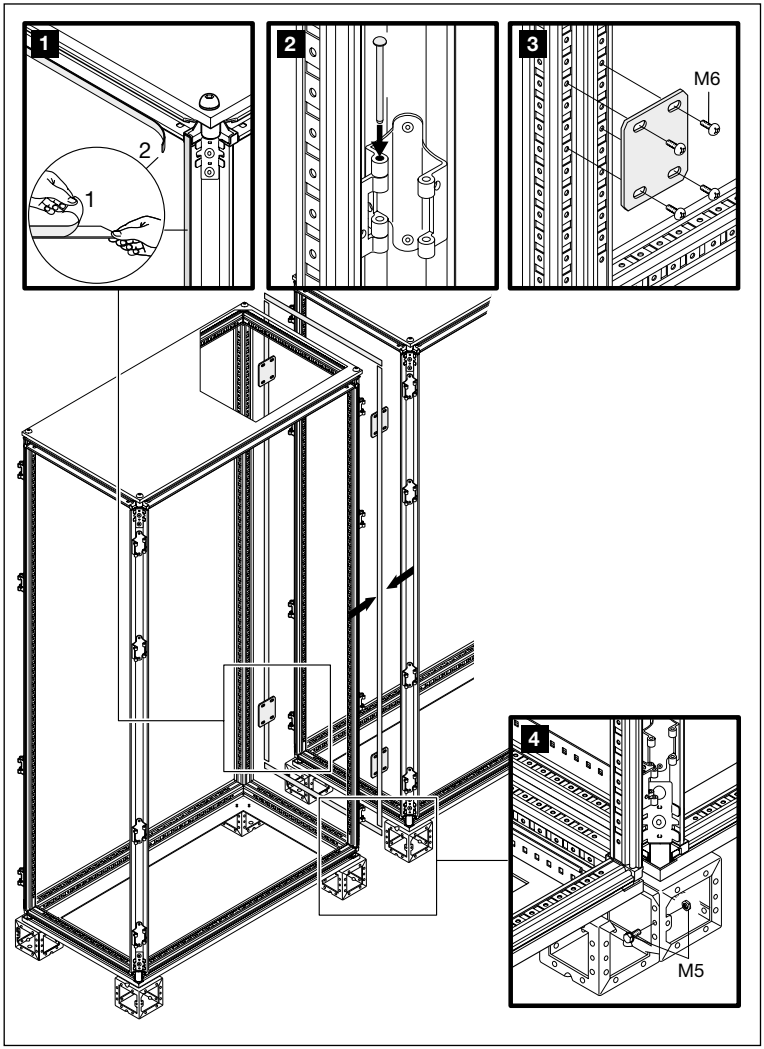

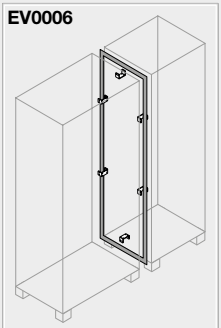
EV0006

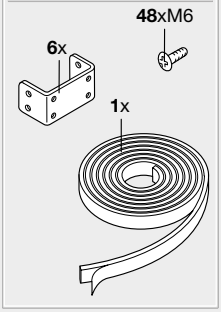
48xM6
6x
1x

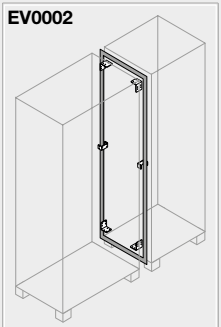
EV0002

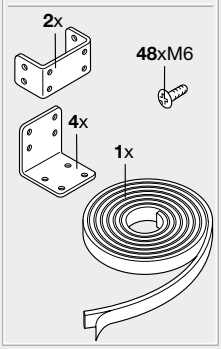
2x
48xM6
4x
1x

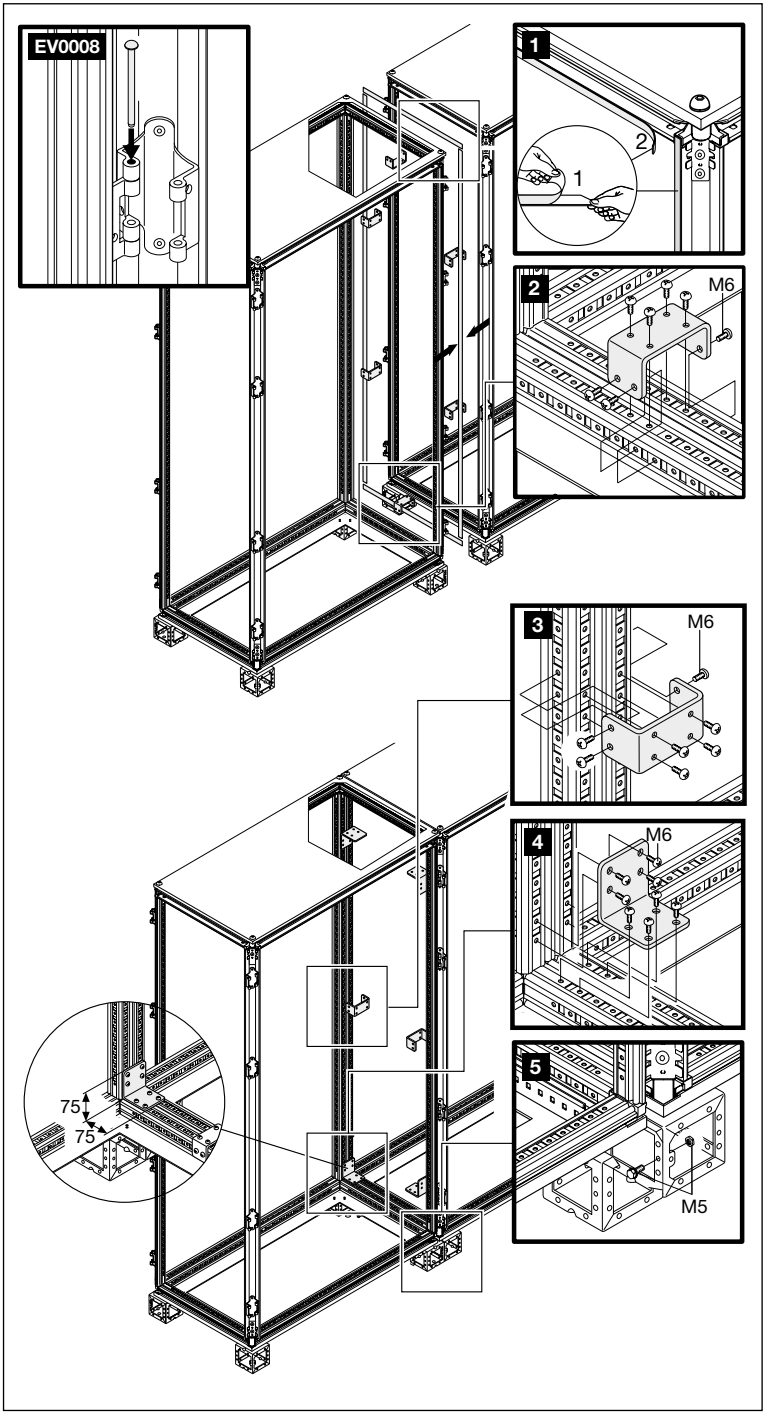
EV0008
1
2
1
2
M6
3
M6
4
M6
5
M5
75
75

EE1841-EE1851-EE1861
EE1881-EE1811-EE2041
EE2051-EE2061-EE2081
EE2011-EE2241-EE2251
EE2261-EE2281-EE2211

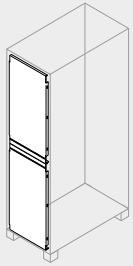

16xM6

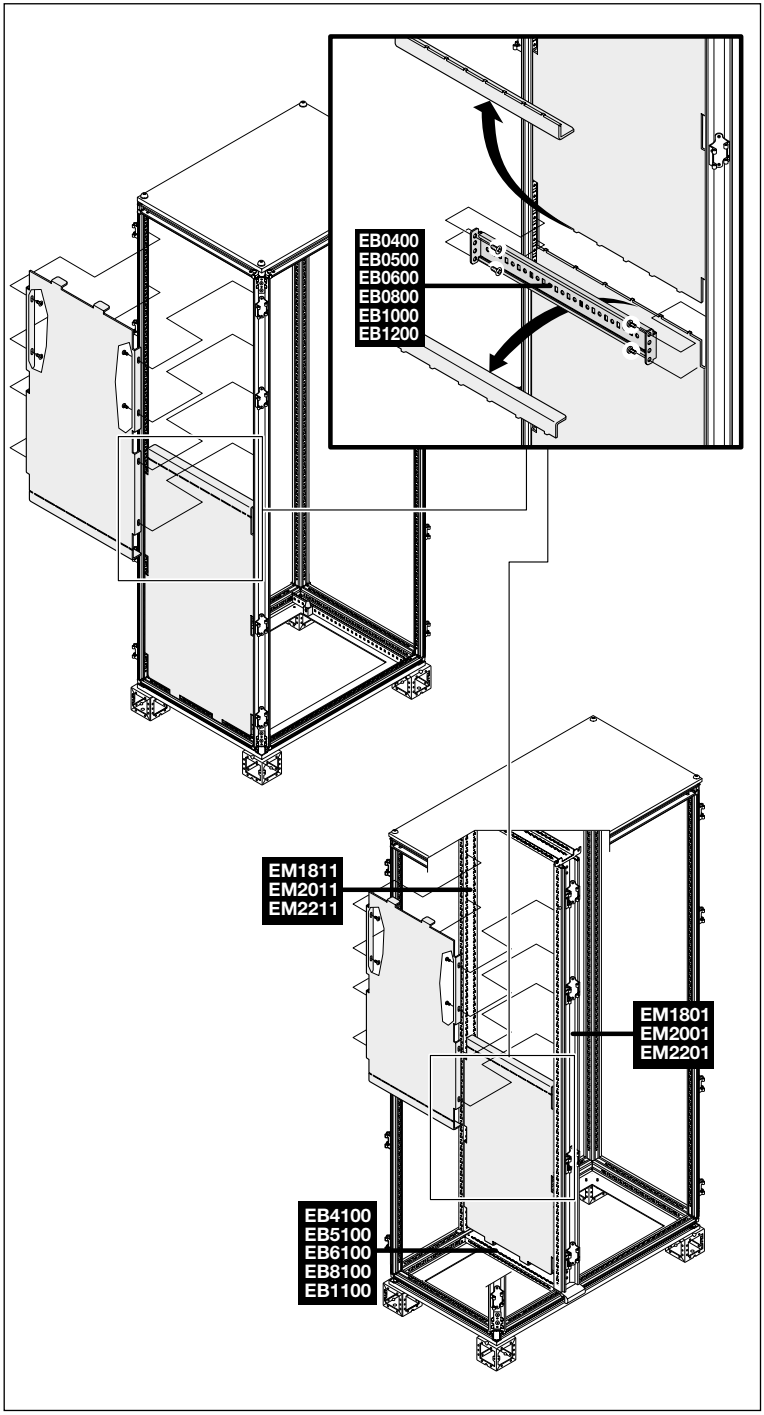

ZN1200-ZN1600-ZN3011
ZN4011-ZN5011-ZN1000
ZN3000-ZN4000-ZN5000
ZN6000-ZN8000

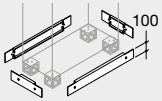

ZN006-ZN008-ZN0010

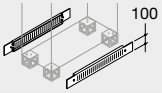

4xM6

ZN1040

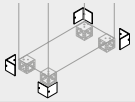

8xM6

ZN4001-ZN5001-ZN6001
ZN8001-ZN1001

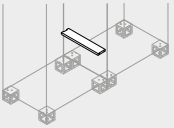

2xM6

ZN1010

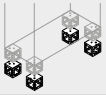

4xM12 **4**xM5

ZN1020

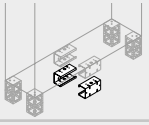

2xM12 **2**xM5

ZN1002-ZN4002-ZN5002
ZN6002-ZN8002

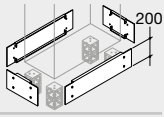

8xM6

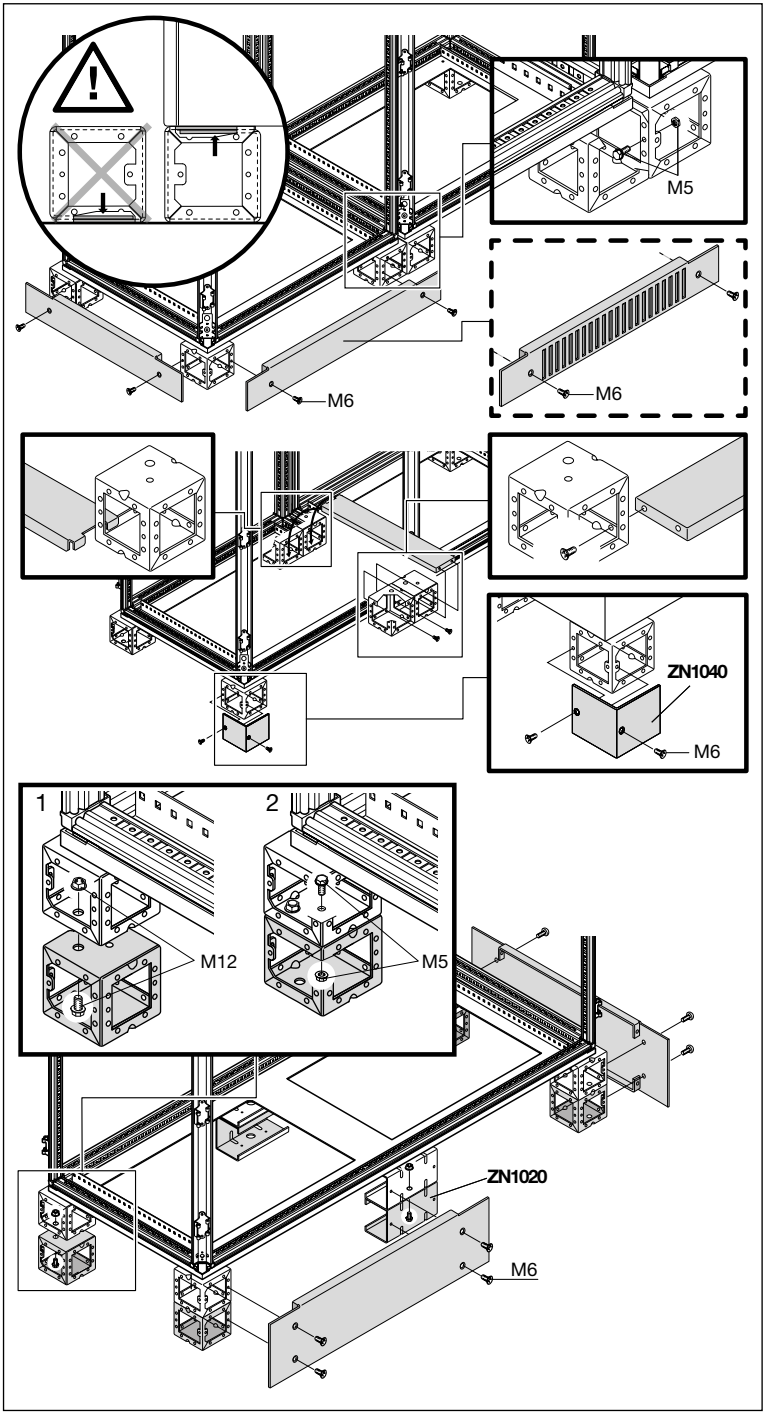

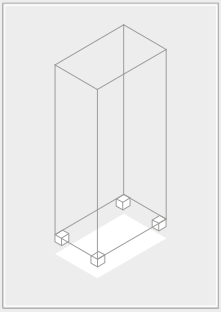

ZN1041

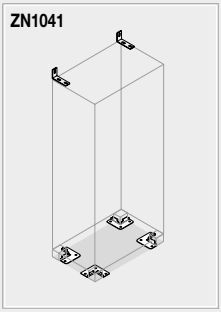

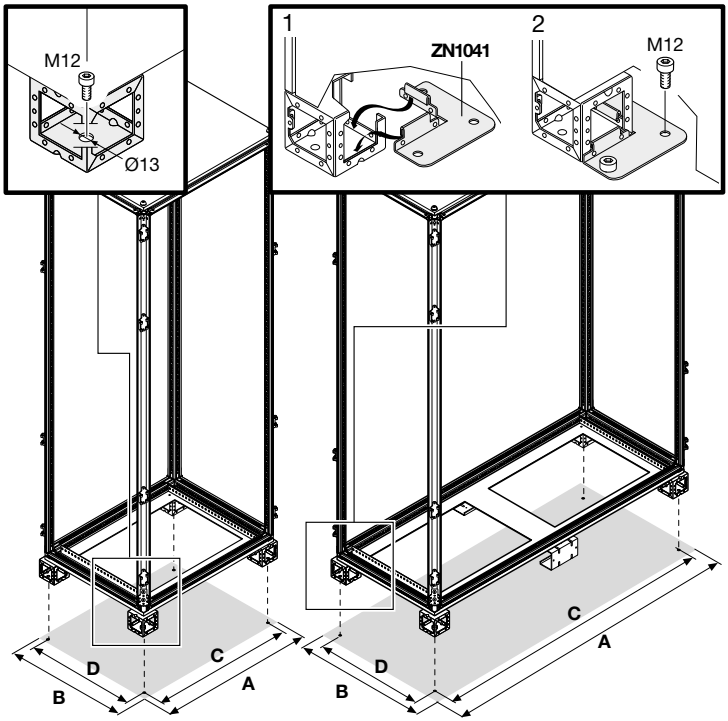

A	B	C	D
394	394	332	332
	494		432
	594		532
	794		732
	994		932
594	394	532	332
	494		432
	594		532
	794		732
	994		932
794	394	732	332
	494		432
	594		532
	794		732
	994		932

A	B	C	D
994	394	932	332
	494		432
	594		532
	794		732
	994		932
1194	394	1132	332
	494		432
	594		532
	794		732
1594	394	1532	332
	494		432
	594		532
	794		732

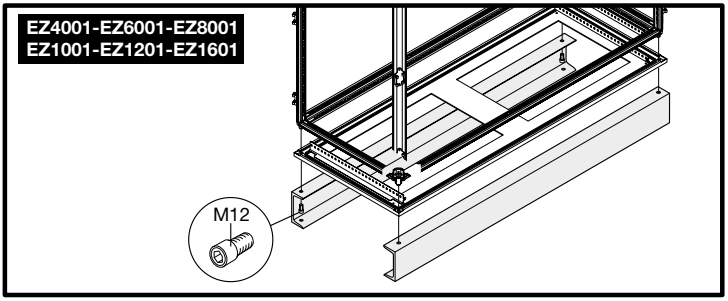

EA2062-EA3061-EA4061
EA5061-EA6061-EA8061
EA2081-EA3081-EA4081
EA5081-EA6081-EA8081

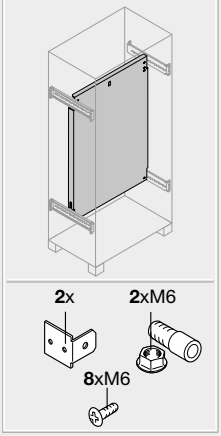

EA2101

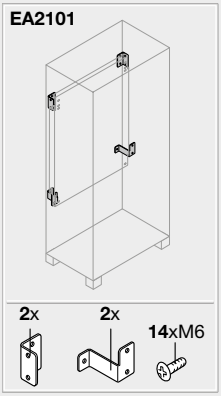

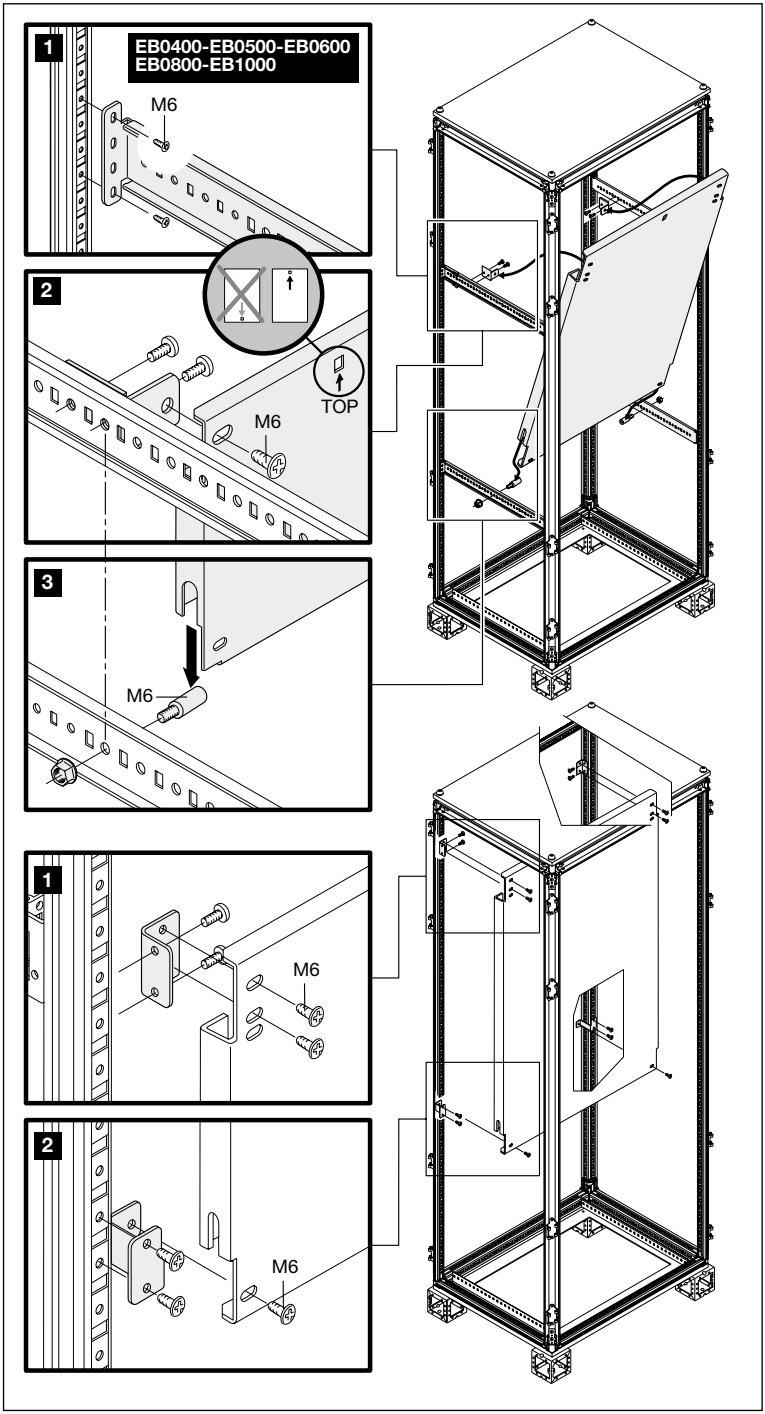

EA1940-EA1960-EA1981
EA1910-EA1912-EA2140
EA2161-EA2180-EA2110
EA2013-EA2340-EA2360
EA2380-EA2310-EA2312

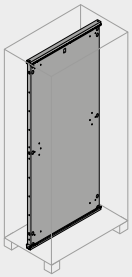

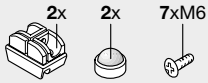

EA0400-EA0600-EA0802
EA1000-EA1200-EA1602

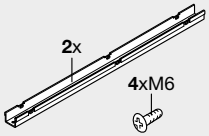

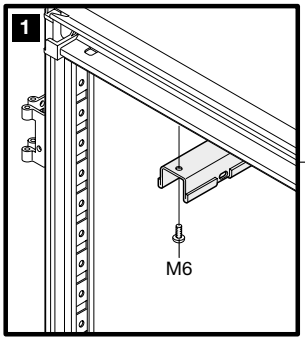

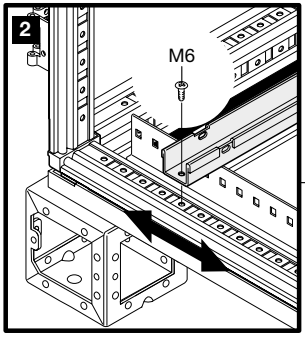

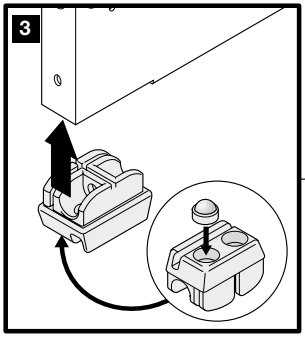

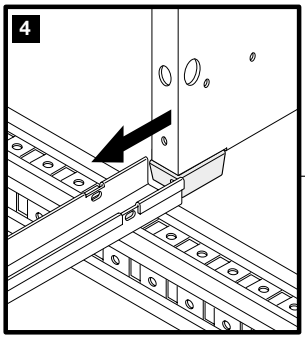

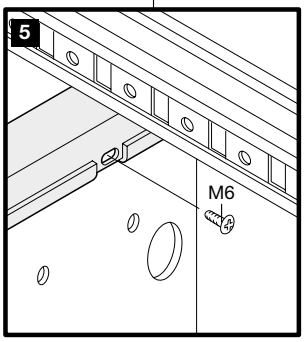

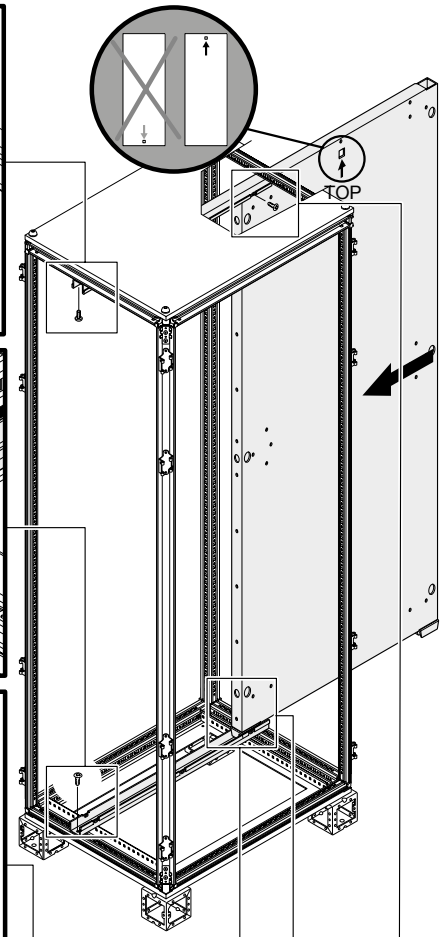

EA1841-EA1860-EA1880
EA1810-EA1812-EA1817
EA1800-EA2040-EA2062
EA2080-EA2010-EA2013
EA2016-EA2000-EA2240
EA2260-EA2280-EA2210
EA2212-EA2216-EA2200

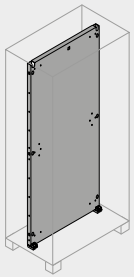

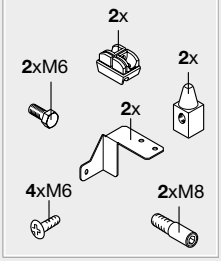

EX1860-EX2060-EX2260
EX1880-EX2080-EX2280
GD1520-GD1530

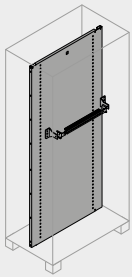

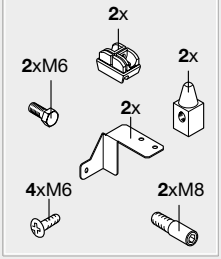

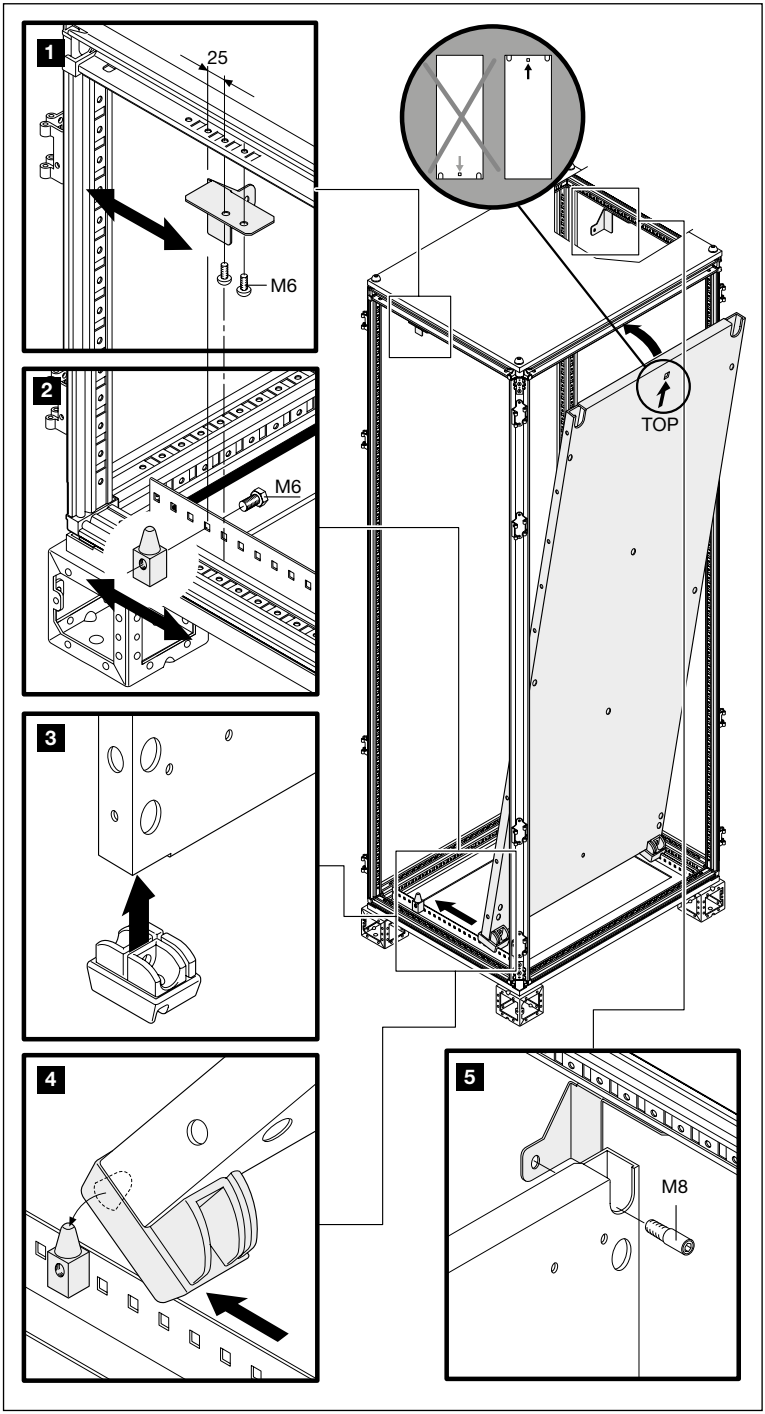

EA2115

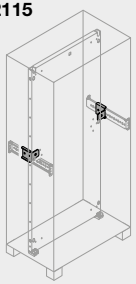

4xM6 2xM8

EA2117

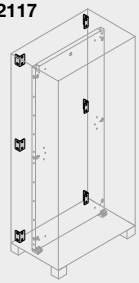

24xM6

EA2100

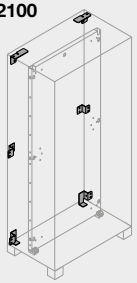

8xM6 2xM8

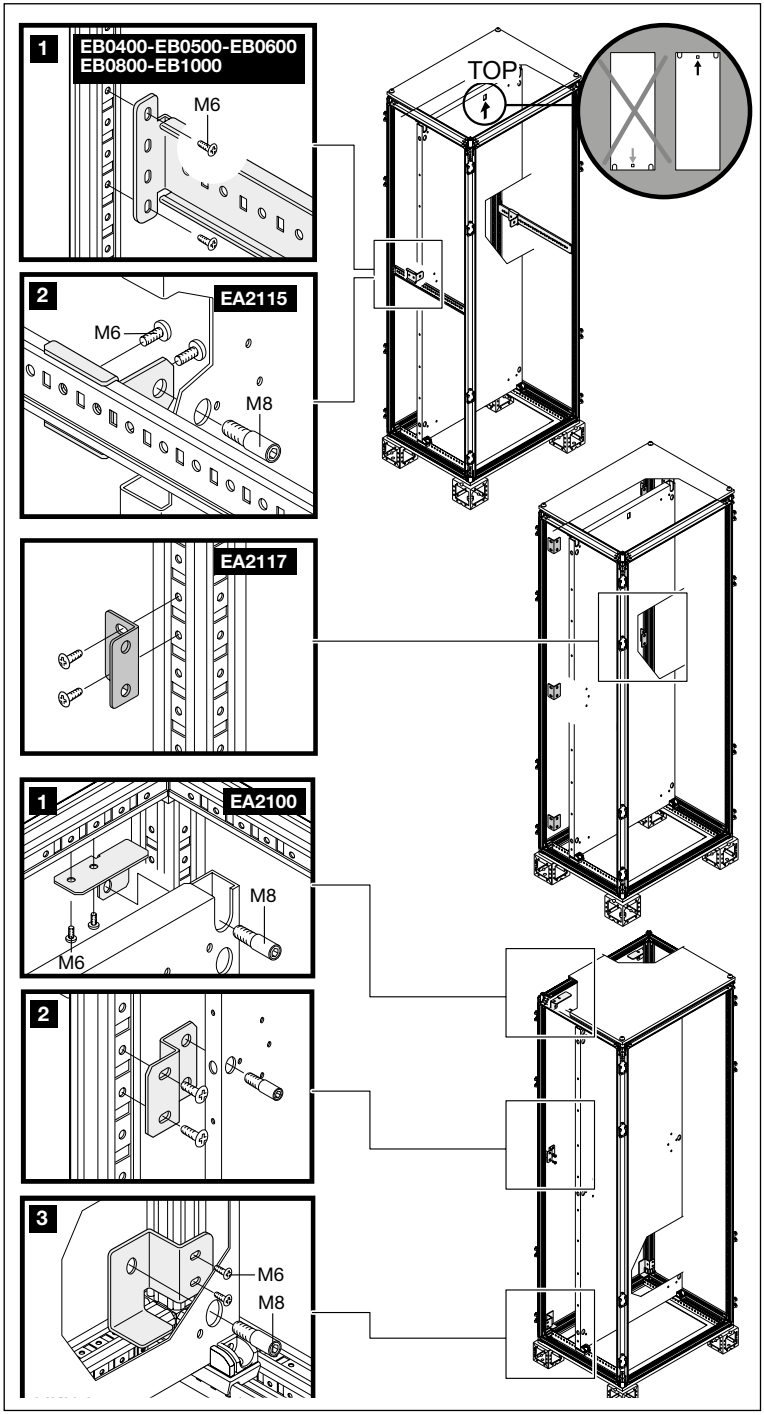

EB4101-EB5101-EB6101
EB8101-EB1101

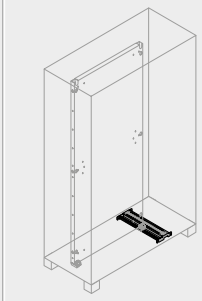

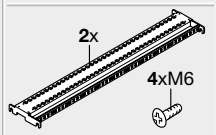

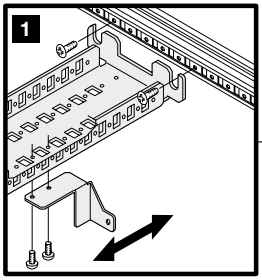

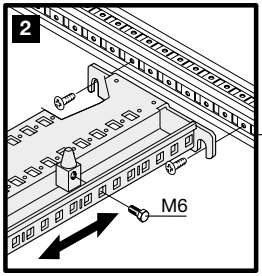

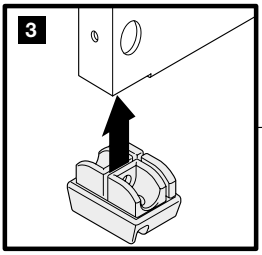

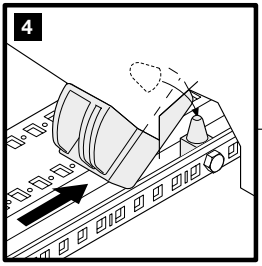

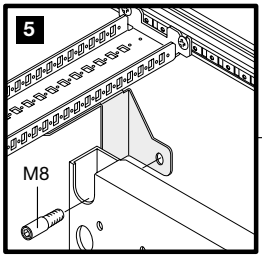

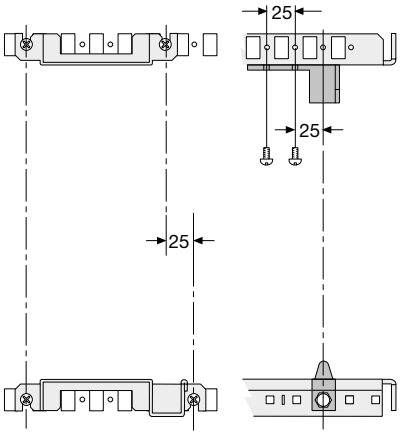

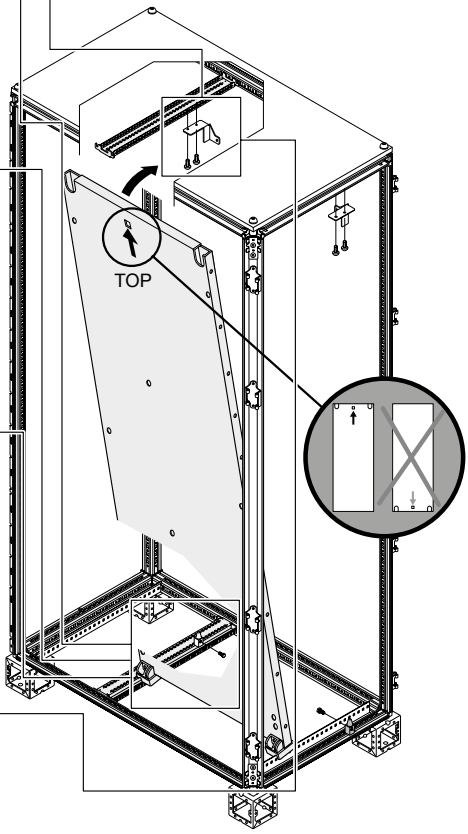

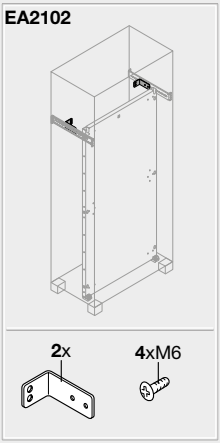
EA2102
2x
4xM6

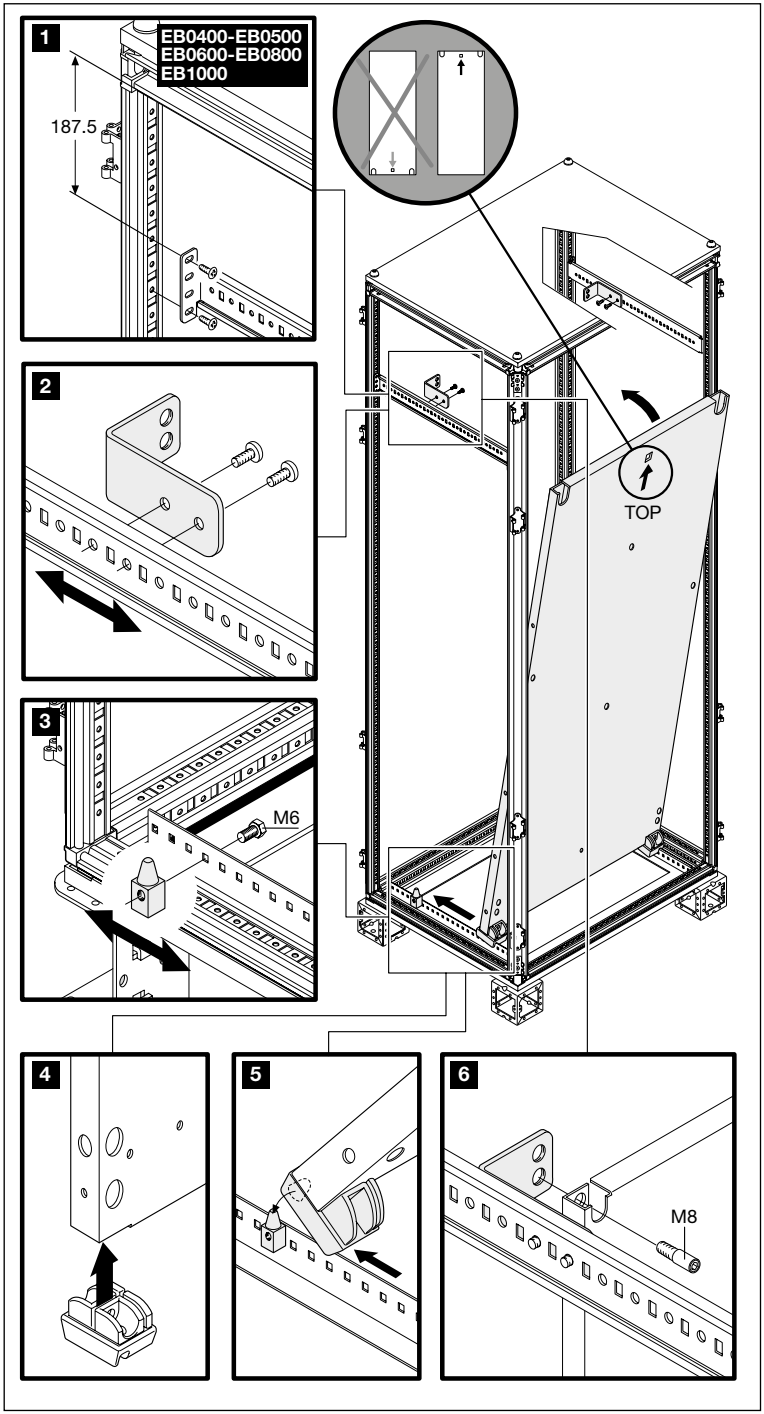
1
EB0400-EB0500
EB0600-EB0800
EB1000
187.5
2
3
M6
TOP
4
5
6
M8

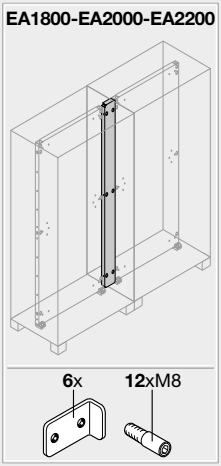
EA1800-EA2000-EA2200
6x
12xM8

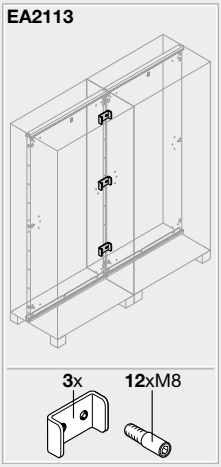
EA2113
3x
12xM8

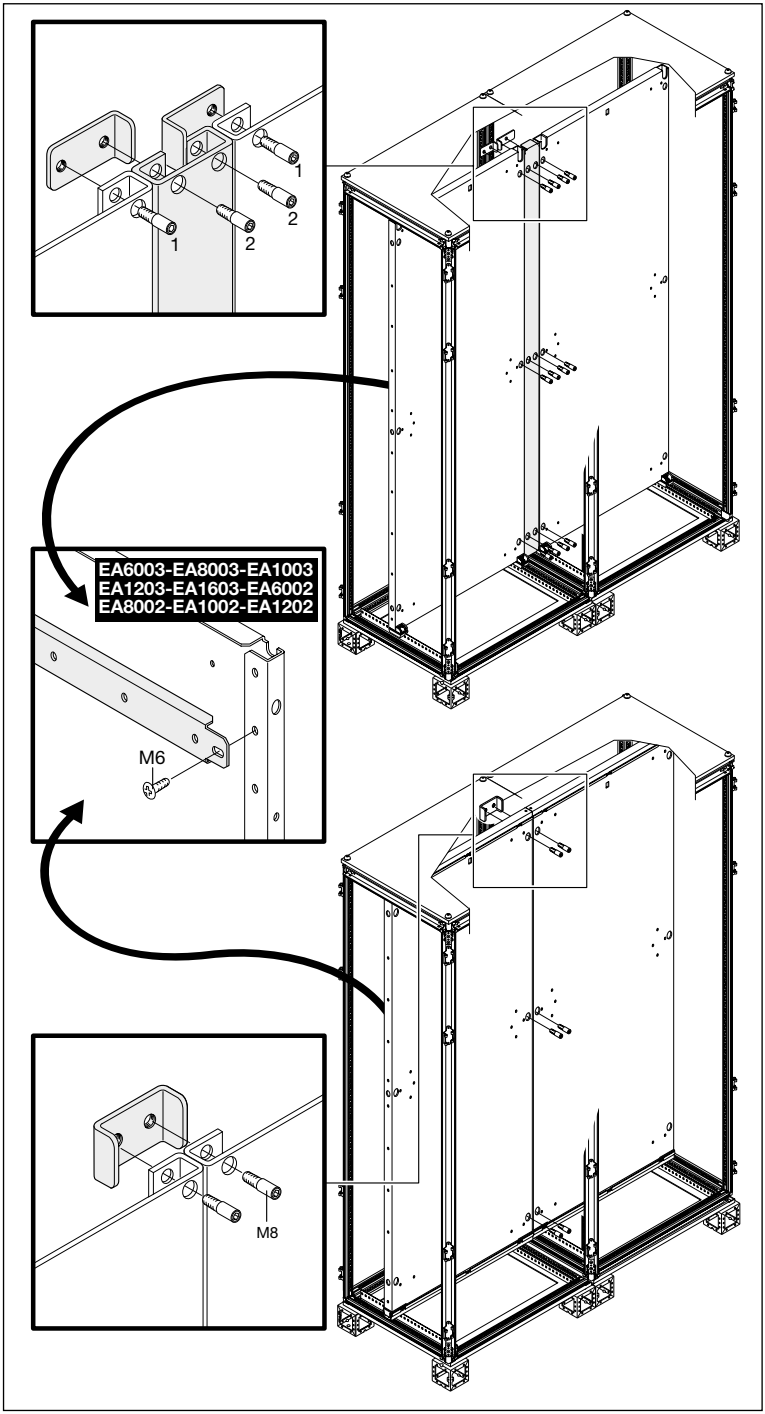
1
2
1
2
EA6003-EA8003-EA1003
EA1203-EA1603-EA6002
EA8002-EA1002-EA1202
M6
M8

EA2118

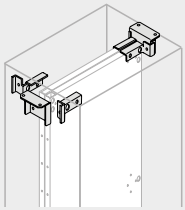

2xM6 2x?? 2x??

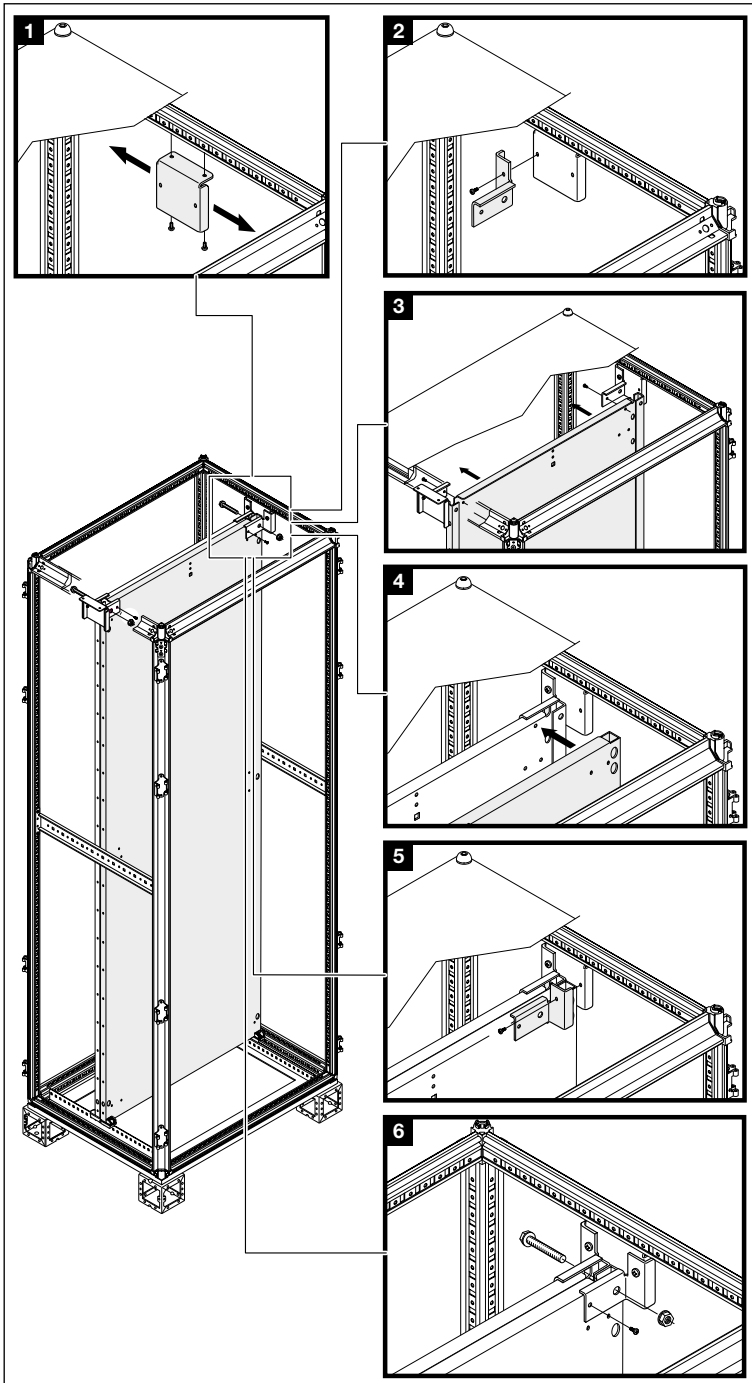

EA0018-EA0020-EA0022

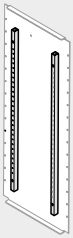

8x?? 8x??

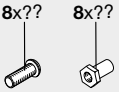

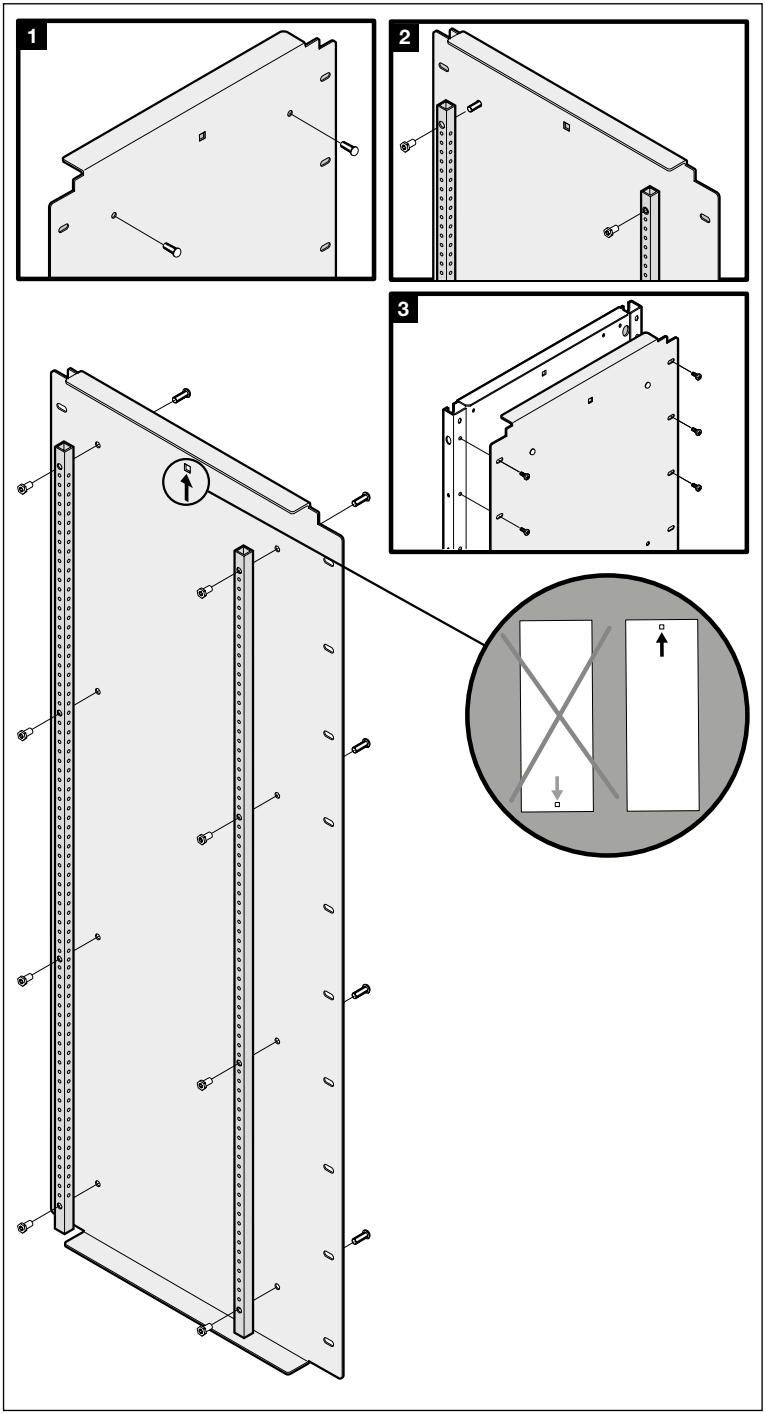

EF4042-EF6043-EF8042
EF1042-EF4052-EF6052
EF8052-EF1052-EF4063
EF6062-EF8062-EF1062
EF4082-EF6082-EF8082
EF1082-EF6012-EF8012
EF1012

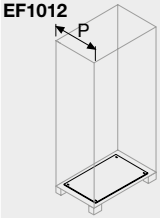

P ≥ 800mm **P ≤ 600mm**

8xM6 **4**xM6

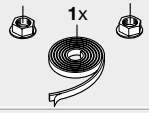

EF4040-EF6040-EF8040
EF1040-EF4050-EF6050
EF8050-EF1053-EF4060
EF6060-EF8060-EF1060
EF4080-EF6080-EF8080
EF1080-EF6010-EF8010
EF1010

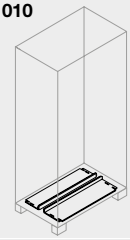

4xM6 **2**x

EF4041-EF6041-EF8041
EF1041-EF4051-EF6051
EF8051-EF1051-EF4061
EF6061-EF8061-EF1061
EF4081-EF6081-EF8081
EF1081-EF6011-EF8011
EF1011

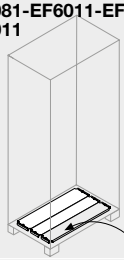

2x **4**xM6 **2**xM6

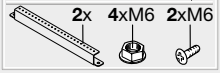

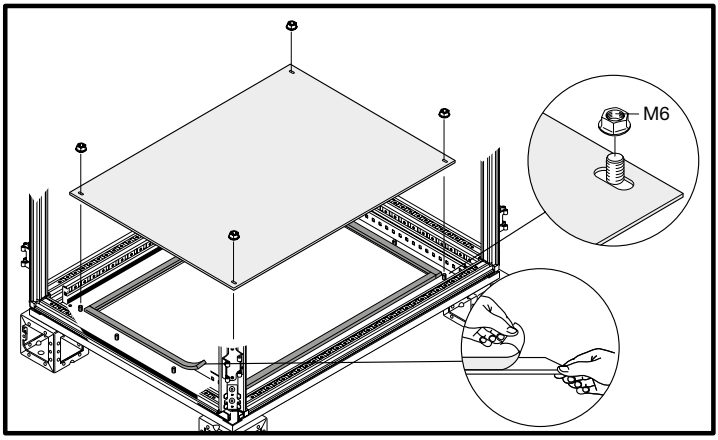

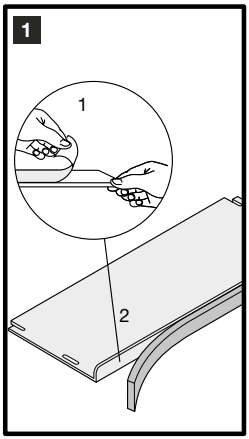

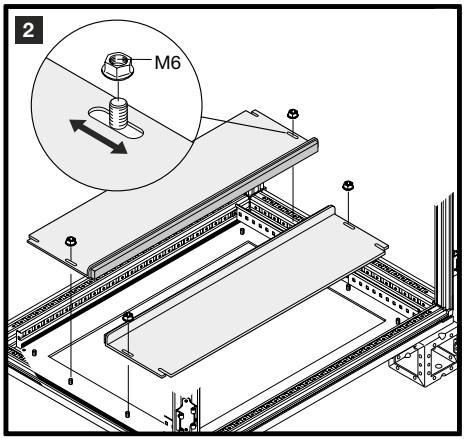

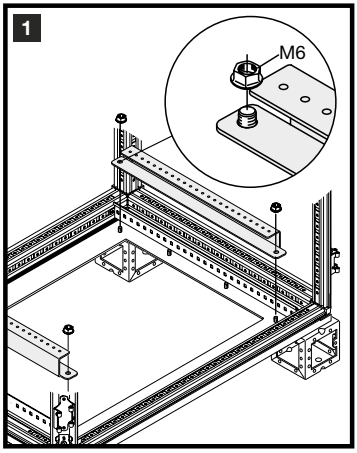

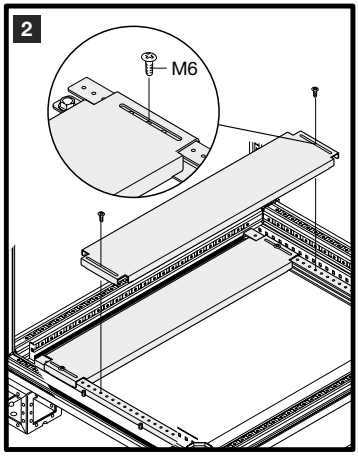

EM1802-EM2002-EM2202

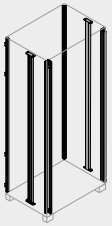

8x **8**xM6 **8**xM10

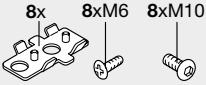

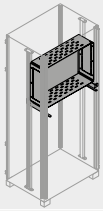

EH2060-EH2180-EH2066
EH2086
8xM6

EH3060-EH4063-EH3080
EH4080
12xM6

EH5060-EH5080-EH6060
EH6080-EH8060-EH8080
18xM6

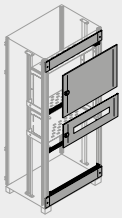

EH6010K-EH8010K
12xM6

EH2061K-EH3061K-EH4061K
EH5061K-EH6061K-EH8062K
EH2081K-EH3081K-EH4081K
EH5081K-EH6083K-EH8081K
EH7262K-EH7282K-EH7284K
EH2067K-EH2087K

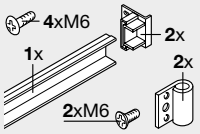

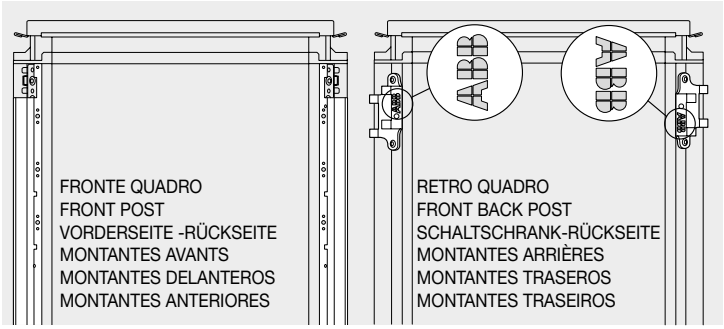

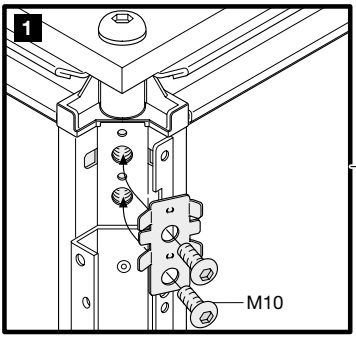

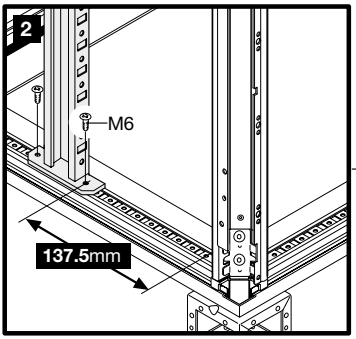

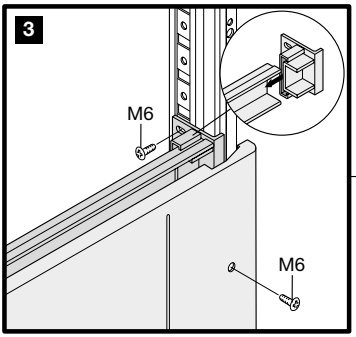

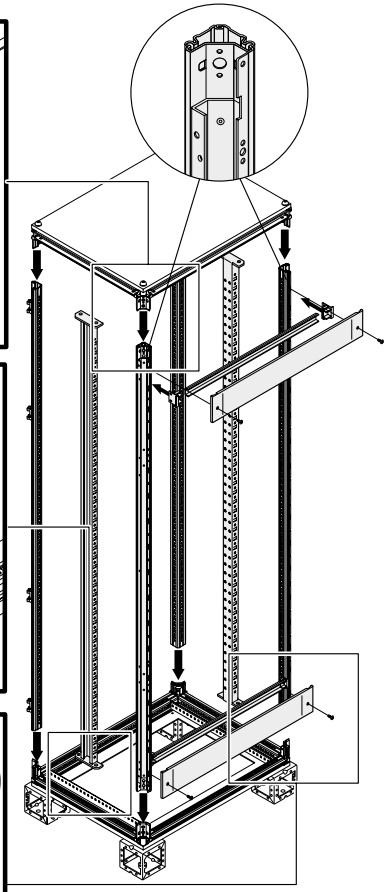

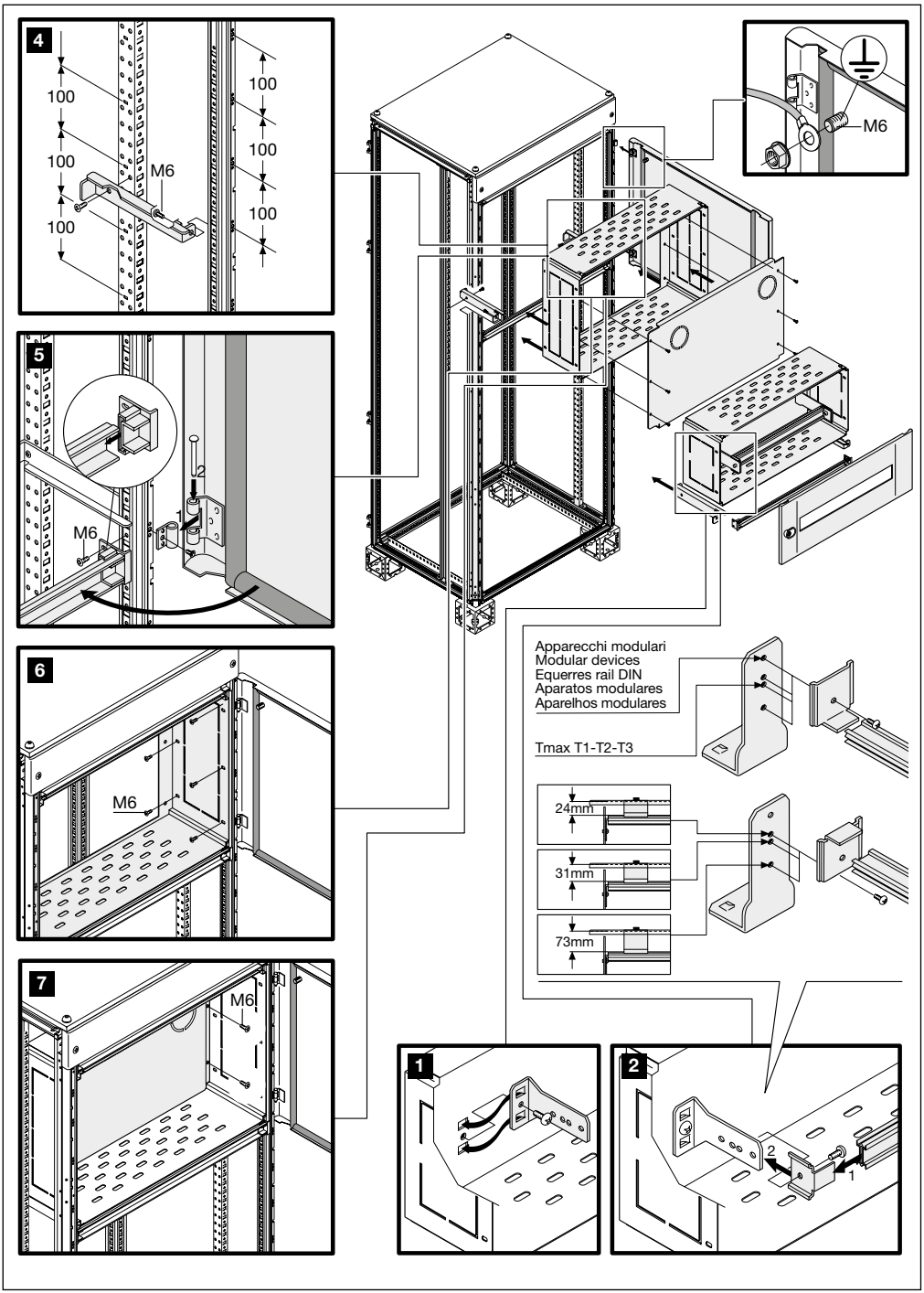
4
100
100
100
100
100
100
M6
5
M6
2
1
6
M6
7
M6
M6
Apparecchi modulari
Modular devices
Equerres rail DIN
Aparatos modulares
Aparelhos modulares
Tmax T1-T2-T3
24mm
31mm
73mm
1
2
2
1

EM1803-EM 2003-EM2203

8x 8xM10 2x
16xM6

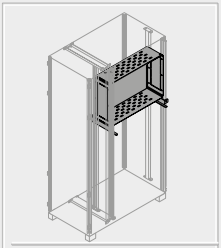

EH2060-EH2180-EH2066
EH2086
8xM6

EH3060-EH4063-EH3080
EH4080
12xM6

EH5060-EH5080-EH6060
EH6080-EH8060-EH8080
18xM6

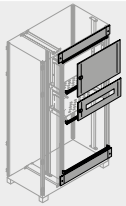

EH6010-EH8010
12xM6

EH2061-EH3061-EH4061
EH5061-EH6061-EH8062
EH2081-EH3081-EH4081
EH5081-EH6083-EH8081
EH7262-EH7282-EH7284
EH2067-EH2087

4xM6
2x
1x
2x
2xM6

FRONTE QUADRO
FRONT POST
VORDERSEITE -RÜCKSEITE
MONTANTES AVANTS
MONTANTES DELANTEROS
MONTANTES ANTERIORES

RETRO QUADRO
FRONT BACK POST
SCHALTSCHRANK-RÜCKSEITE
MONTANTES ARRIÈRES
MONTANTES TRASEROS
MONTANTES TRASEIROS

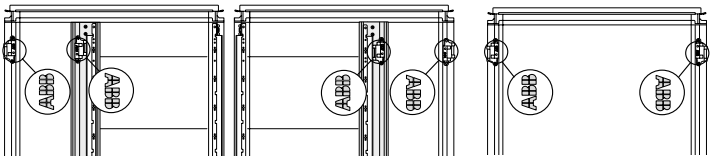

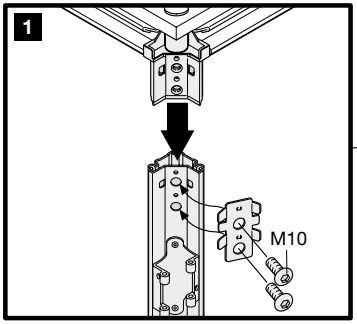

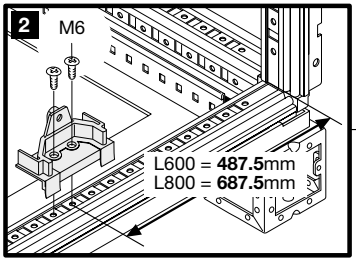

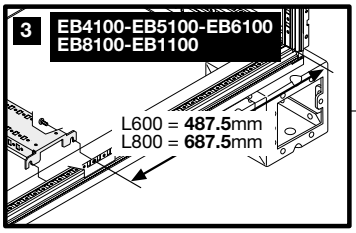

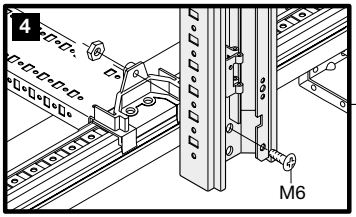

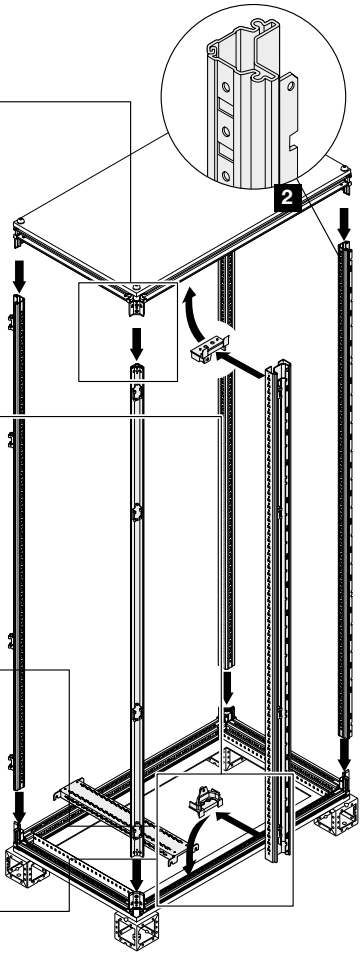

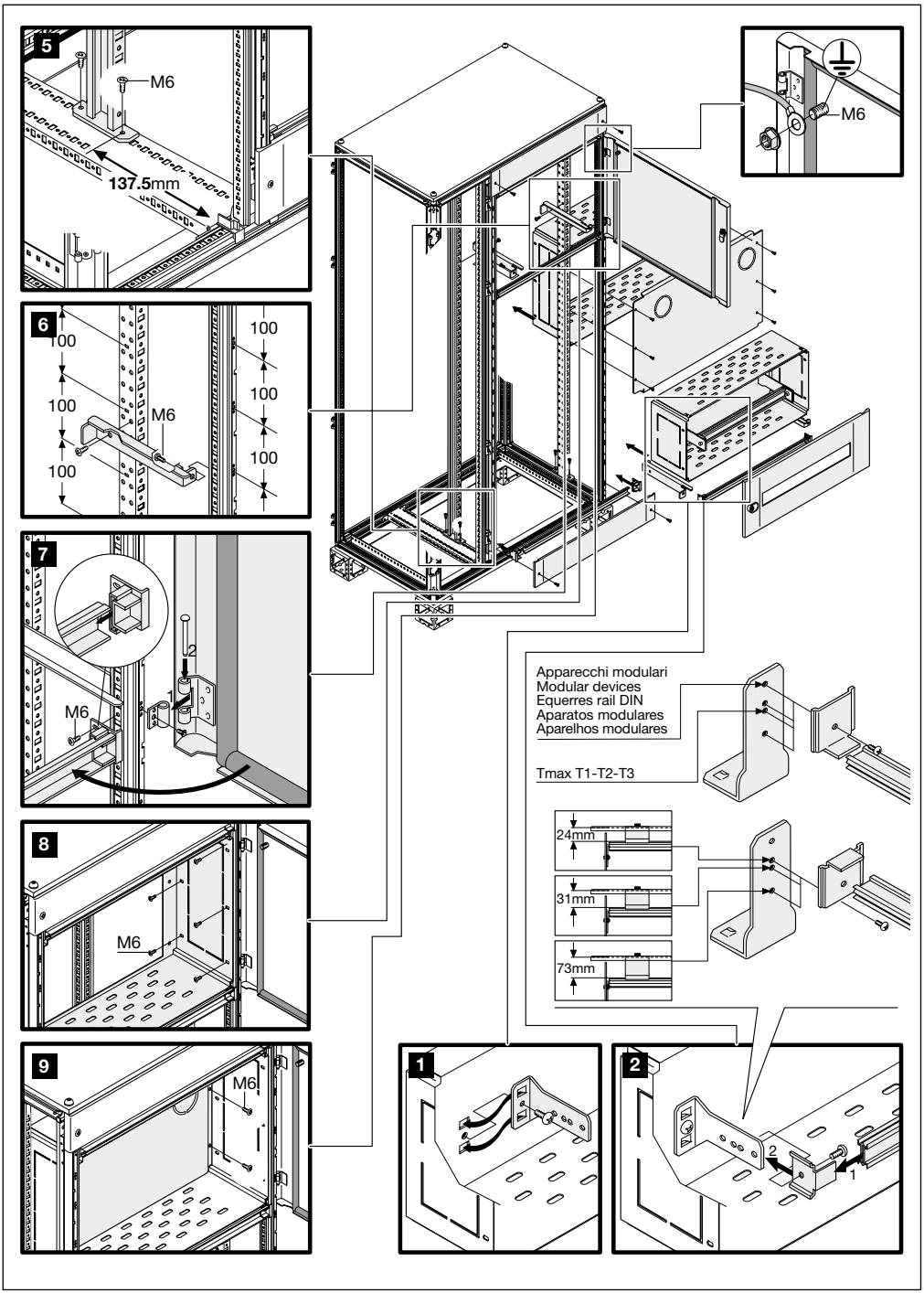
5
M6
137.5mm
6
100
100
M6
100
100
100
100
7
2
1
M6
8
M6
9
M6
M6
Apparecchi modulari
Modular devices
Equerres rail DIN
Aparatos modulares
Aparelhos modulares
Tmax T1-T2-T3
24mm
31mm
73mm
1
2
2
1

EE4041-EE6041-EE8041
EE1041-EE4051-EE6051
EE8051-EE1051-EE6061
EE8061-EE1061-EE8081
EE1081-EE1011

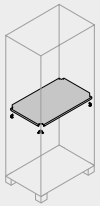

8xM6

EE1001K-EE1002K
EE1003K-EE1004K

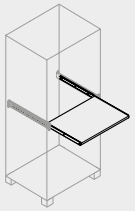

12xM6

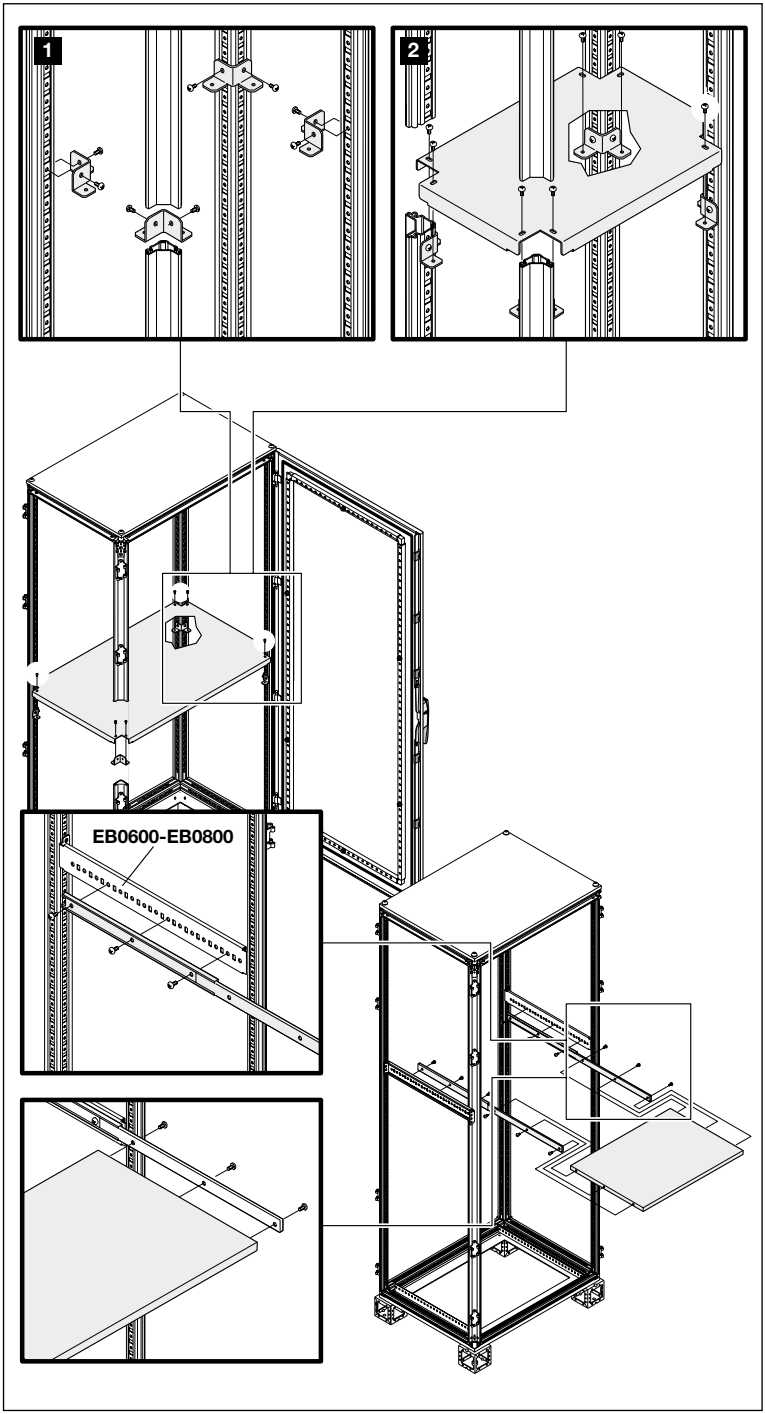

EE1852-EE1862
EE2052-EE2062
EE2252-EE2262

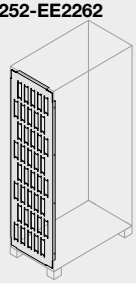

8xM6

EE0024-EE2416
EE2410-EE2406

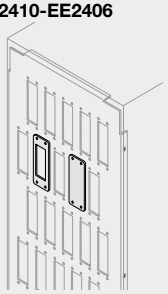

4xM6

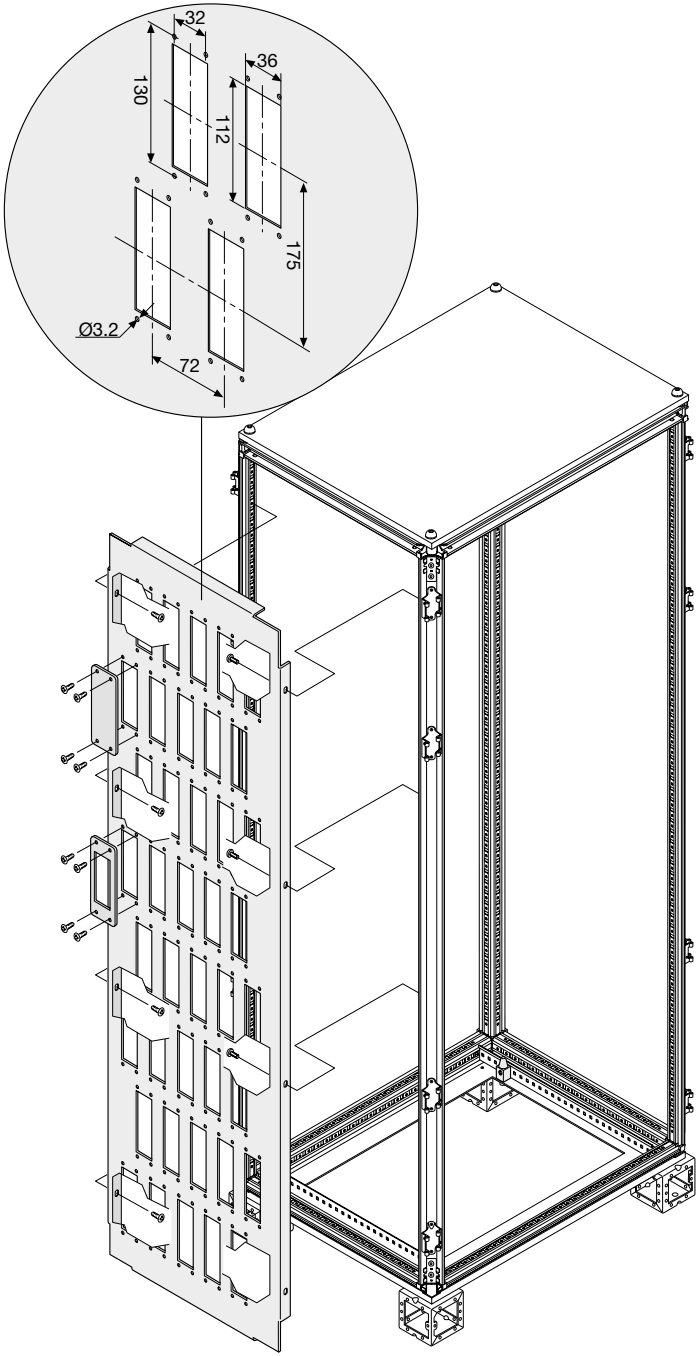

ER4040K-ER6040K-ER8040K
ER1041K-ER4050K-ER6050K
ER8050K-ER1050K-ER4060K
ER6060K-ER8061K-ER1060K
ER4080K-ER6080K-ER8080K
ER1080K-ER4011K-ER6010K
ER8010K-ER1010K

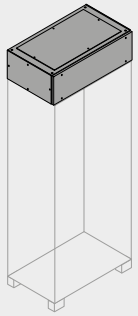

10xM6

ER1000

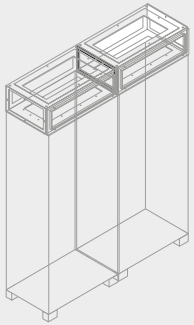

1x

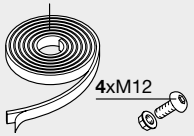

4xM6

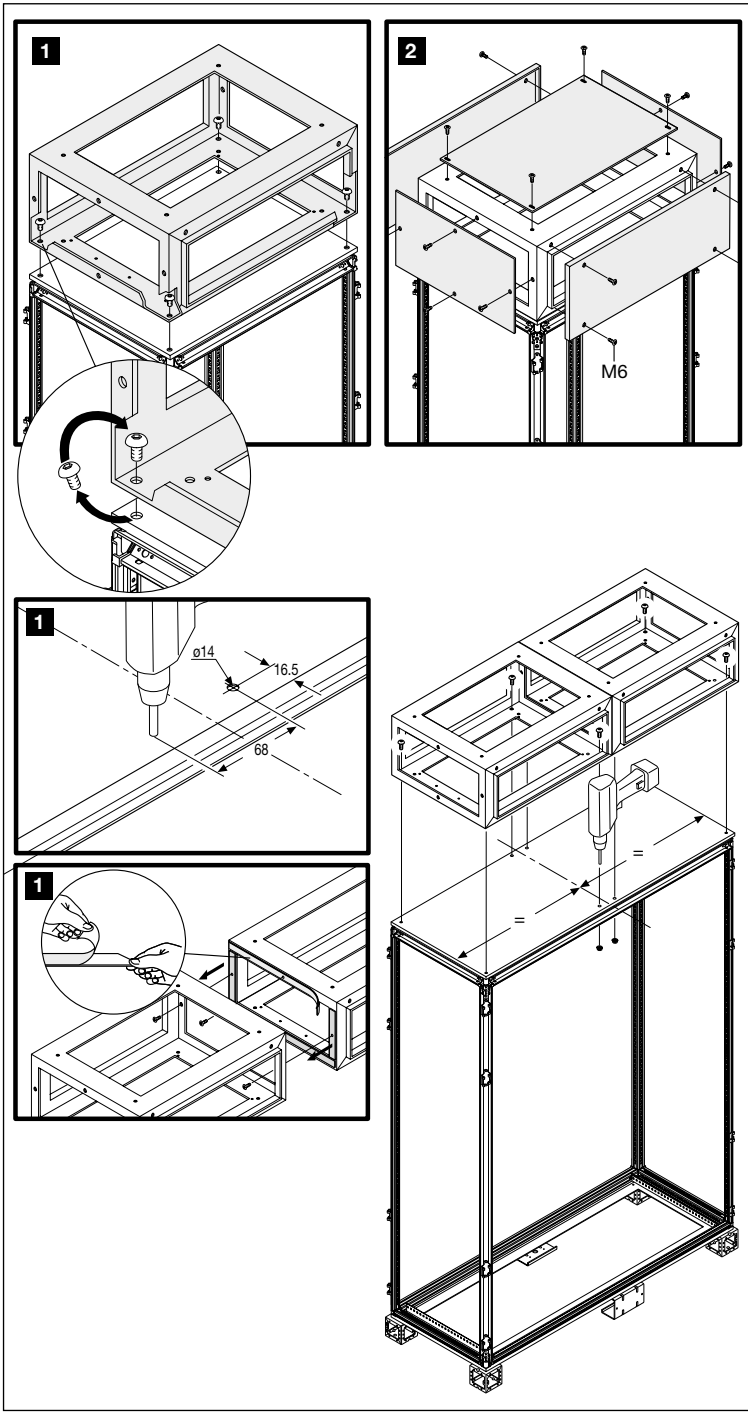

EX1860-EX2060-EX2260
EX1880-EX2080-EX2280

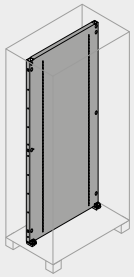

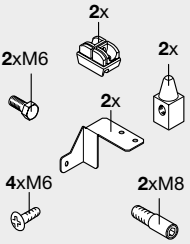

GD1520-GD1530

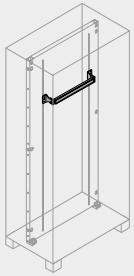

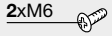

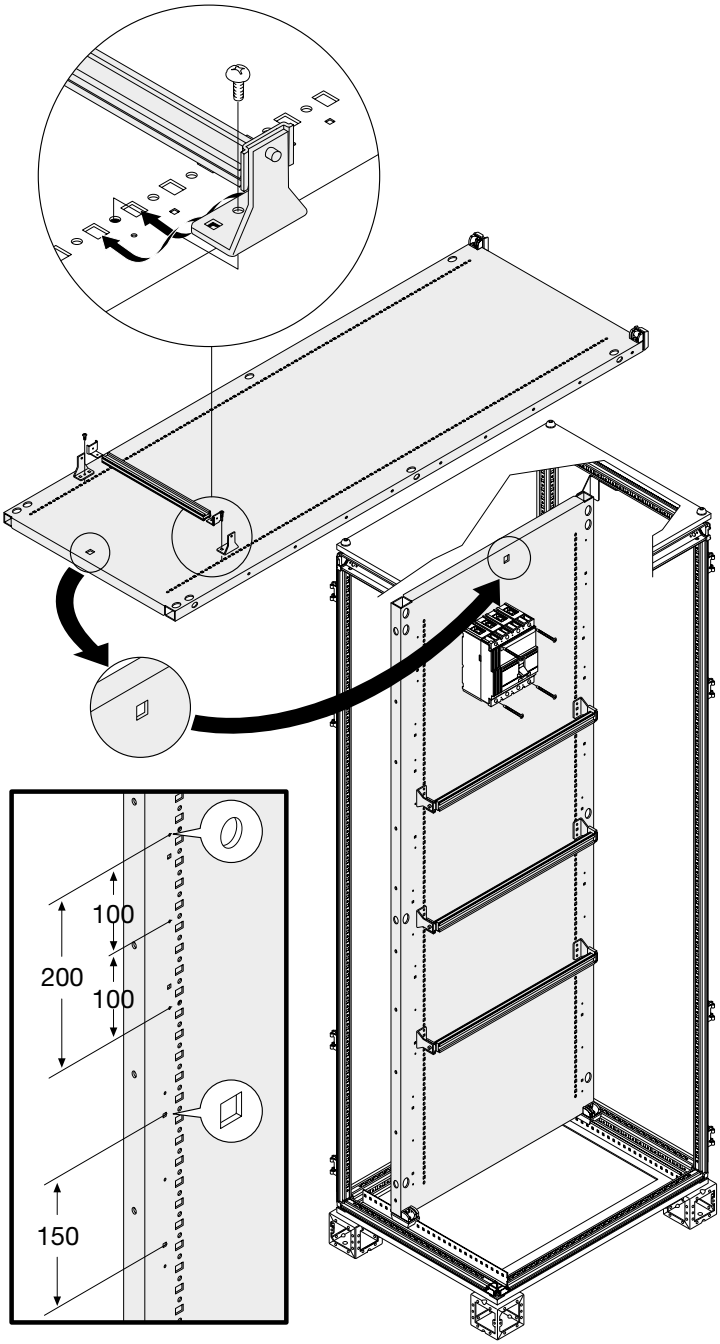

EH1800-EH2000-EH2200

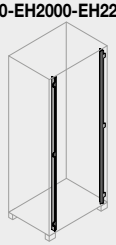

6xM6

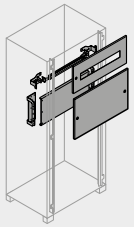

EH0018-EH0029

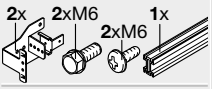

EH0024-EH0036

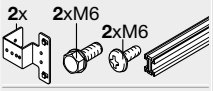

EH2065-EH3065-EH4065
EH2085-EH3085-EH4085

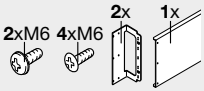

EH0562K-EH1062K-EH1562K
EH2062K-EH3063K-EH4062K
EH0582K-EH1082K-EH1582K
EH2082K-EH3082K-EH4082K
EH5082K-EH6082K-EH1518K
EH2018K-EH1529K-EH2029K
EH2272K-EH2297K-EH3272K
EH3496K-EH1524K-EH2024K
EH1536K-EH2036K

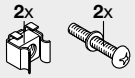

EH5062K-EH6062K-EH6082K
EH6018K-EH6029K-EH6025K
EH6036K

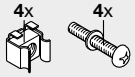

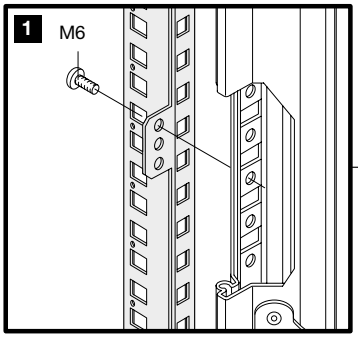

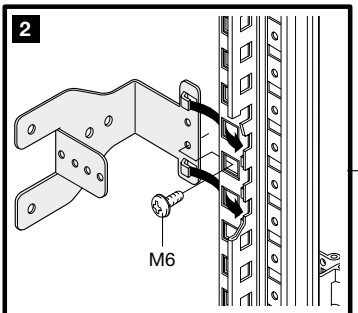

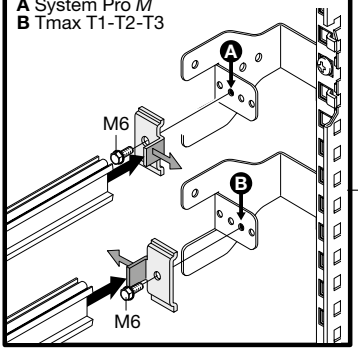

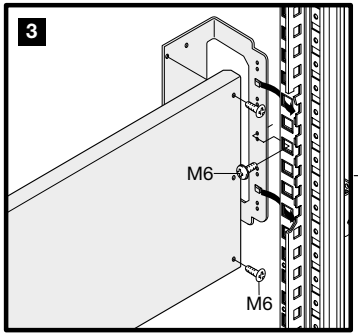

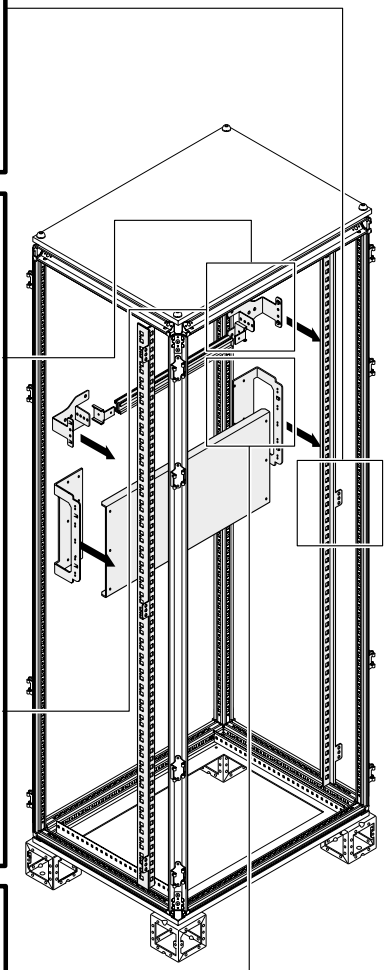

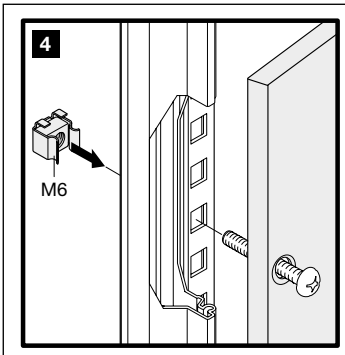
4
M6

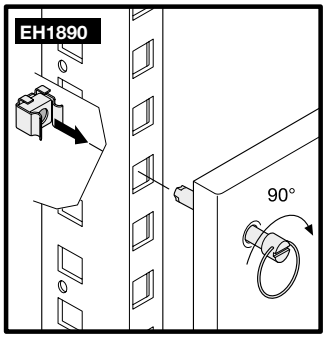
EH1890
90°

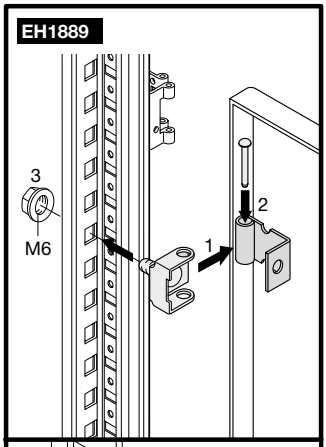
EH1889
3
M6
2
1

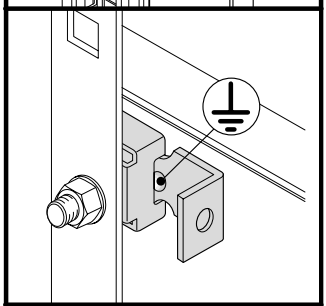

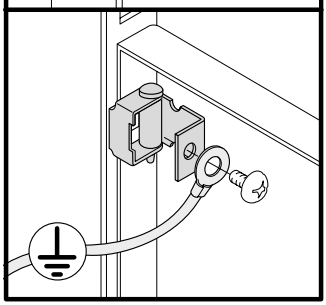

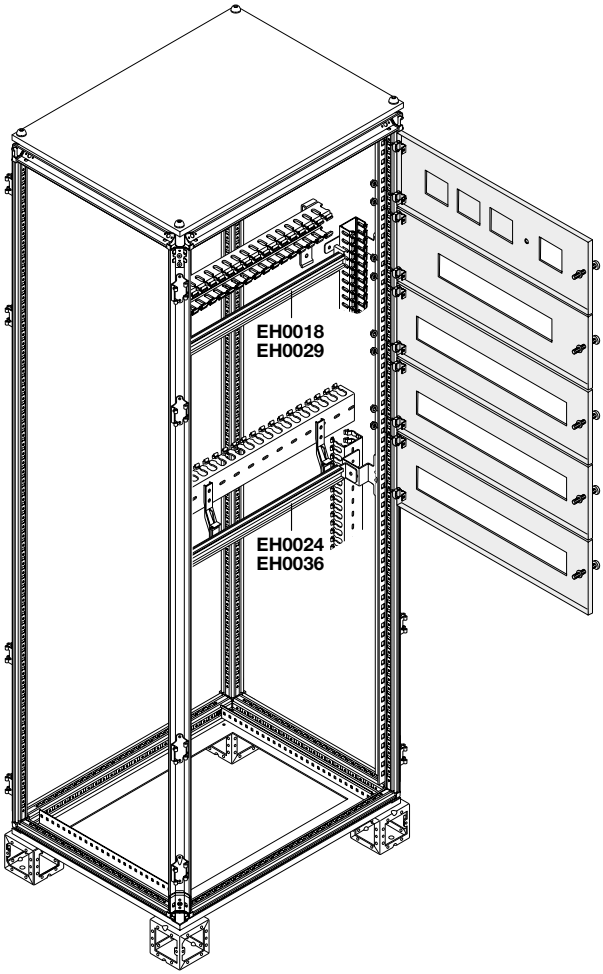
EH0018
EH0029
EH0024
EH0036

EG1800-EG2000-EG2200
EG1880-EG2080-EG2280

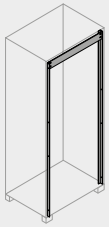

2xM6 **8**xM6

EM1804-EM2004-EM2204

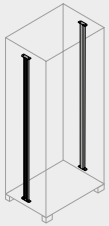

8xM6

EG1991-EG1902-EG1903
EG1904-EG1905-EG1906
EG1907-EG1908-EG1909
EG1910-EG1911-EG1912
EG1913-EG1914-EG1915
EG1916-EG1917-EG1918
EG1999-EG1920

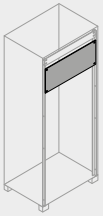

4xM6

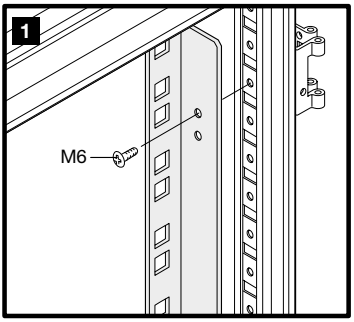

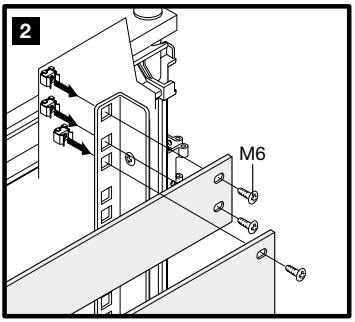

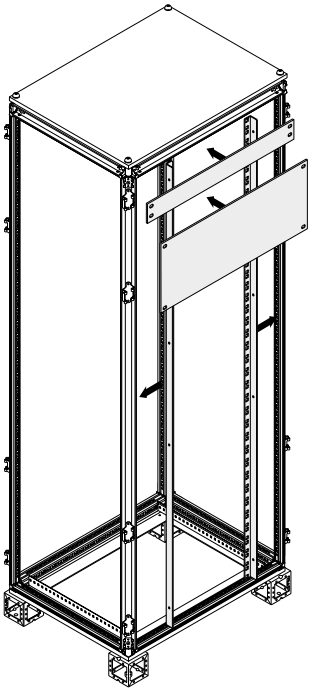

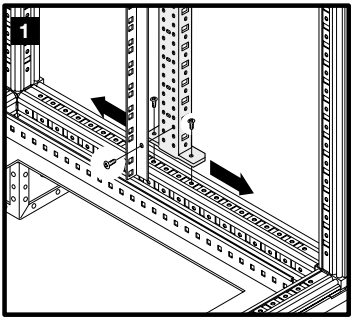

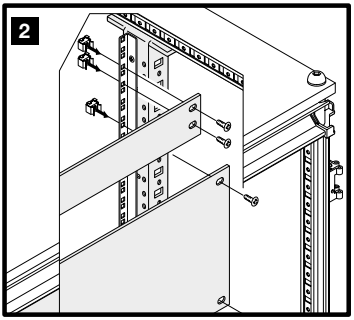

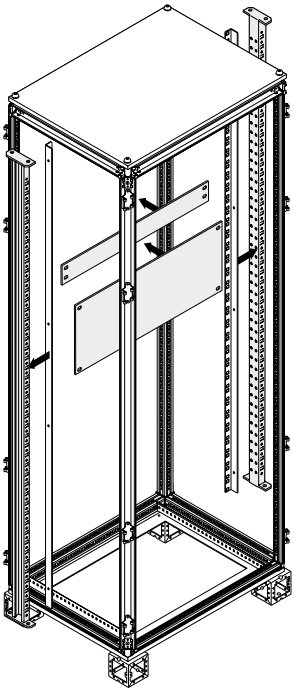

EG0500K-EG0900K
EG1300K

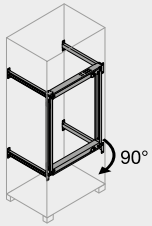

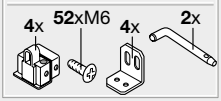

EG1991-EG1902-EG1903
EG1904-EG1905-EG1906
EG1907-EG1908-EG1909
EG1910-EG1911-EG1912
EG1913-EG1914-EG1915
EG1916-EG1917-EG1918
EG1999-EG1920

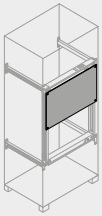

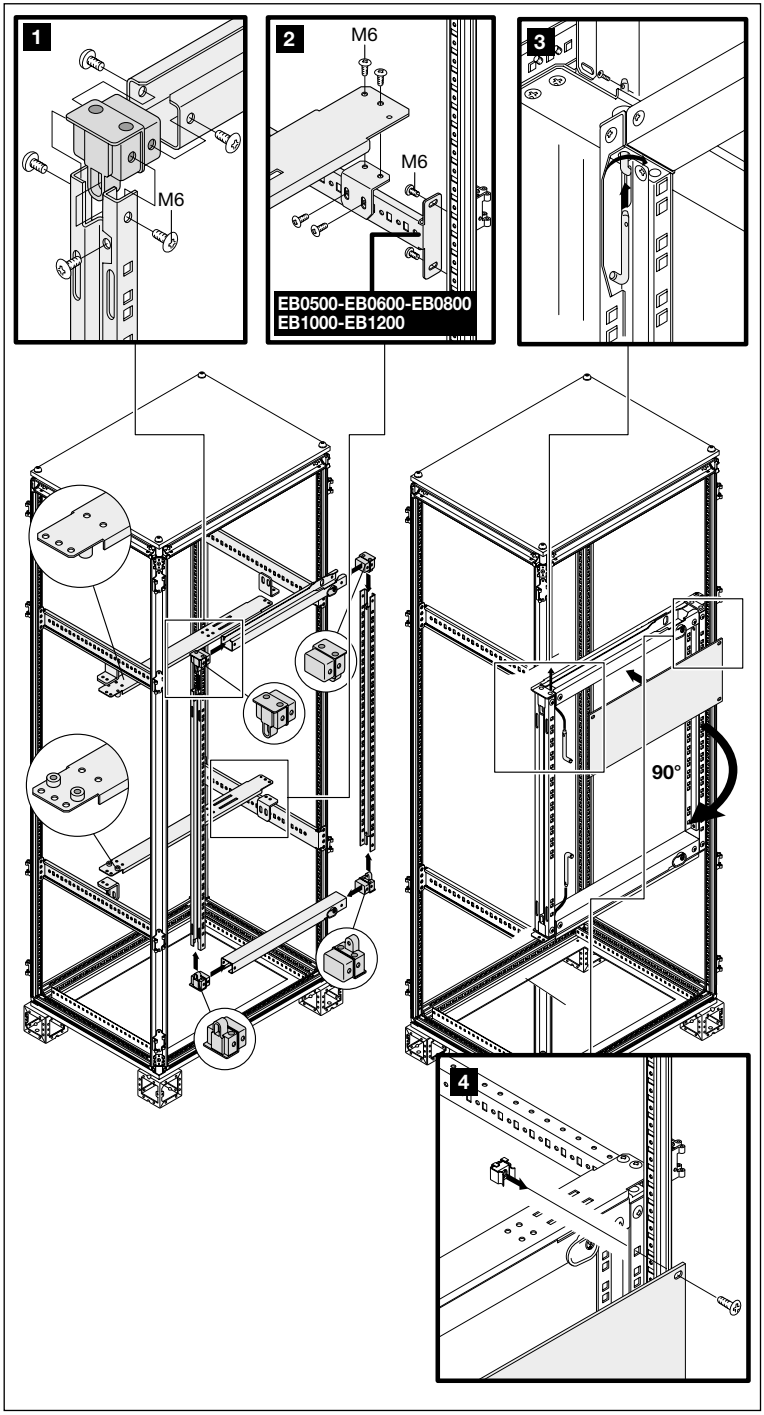

EG1801K-EG2001K
EG2201K

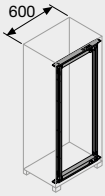

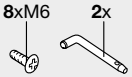

EG1991-EG1902-EG1903
EG1904-EG1905-EG1906
EG1907-EG1908-EG1909
EG1910-EG1911-EG1912
EG1913-EG1914-EG1915
EG1916-EG1917-EG1918
EG1999-EG1920

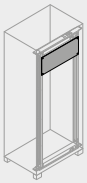

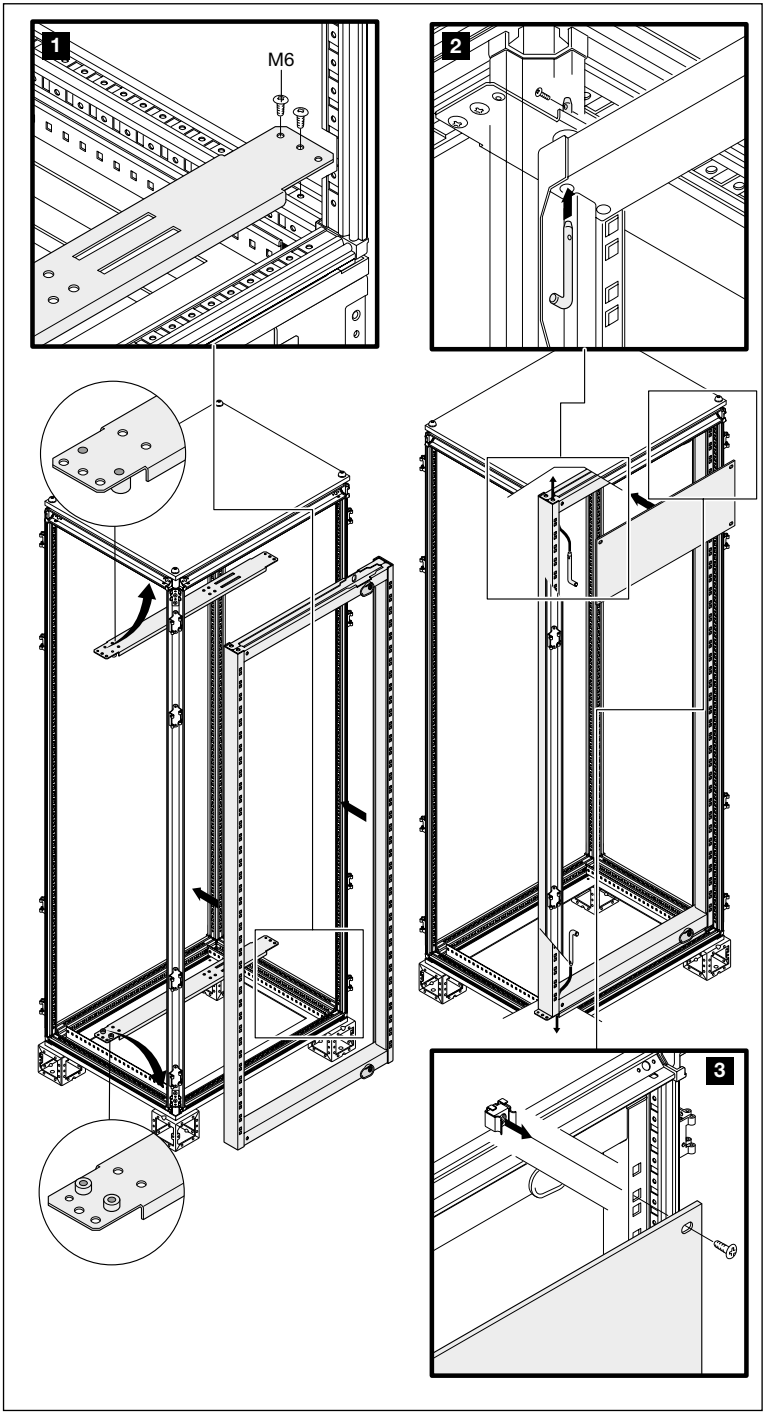

EG1803-EG2003-EG2203

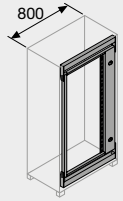

8xM6 **2**x

EG1991-EG1902-EG1903
EG1904-EG1905-EG1906
EG1907-EG1908-EG1909
EG1910-EG1911-EG1912
EG1913-EG1914-EG1915
EG1916-EG1917-EG1918
EG1999-EG1920

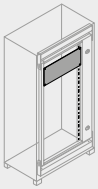

4xM6

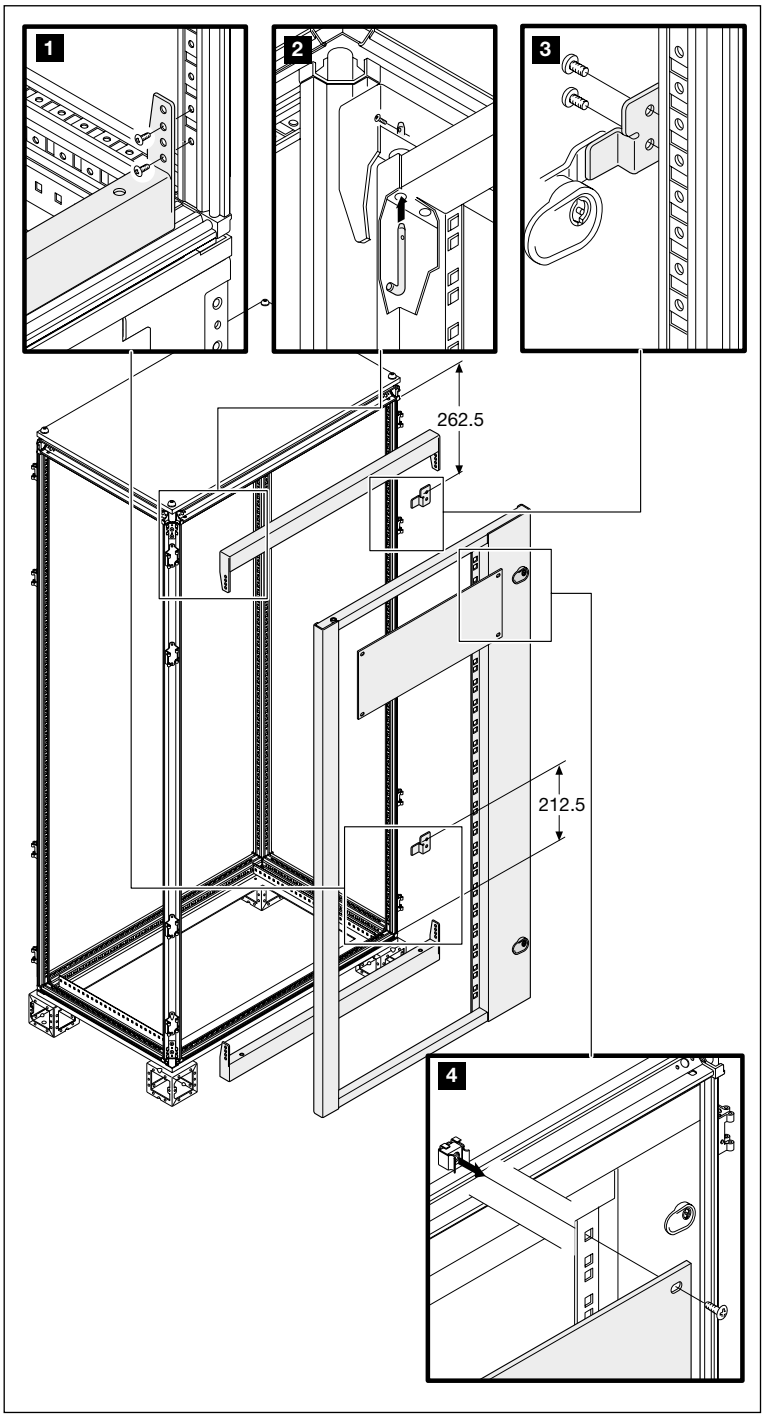

EV0007

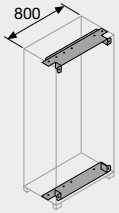

24xM6 **8**x **2**x

EG1804K-EG2004K
EG2204K

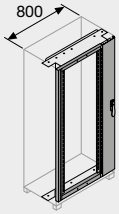

10xM6

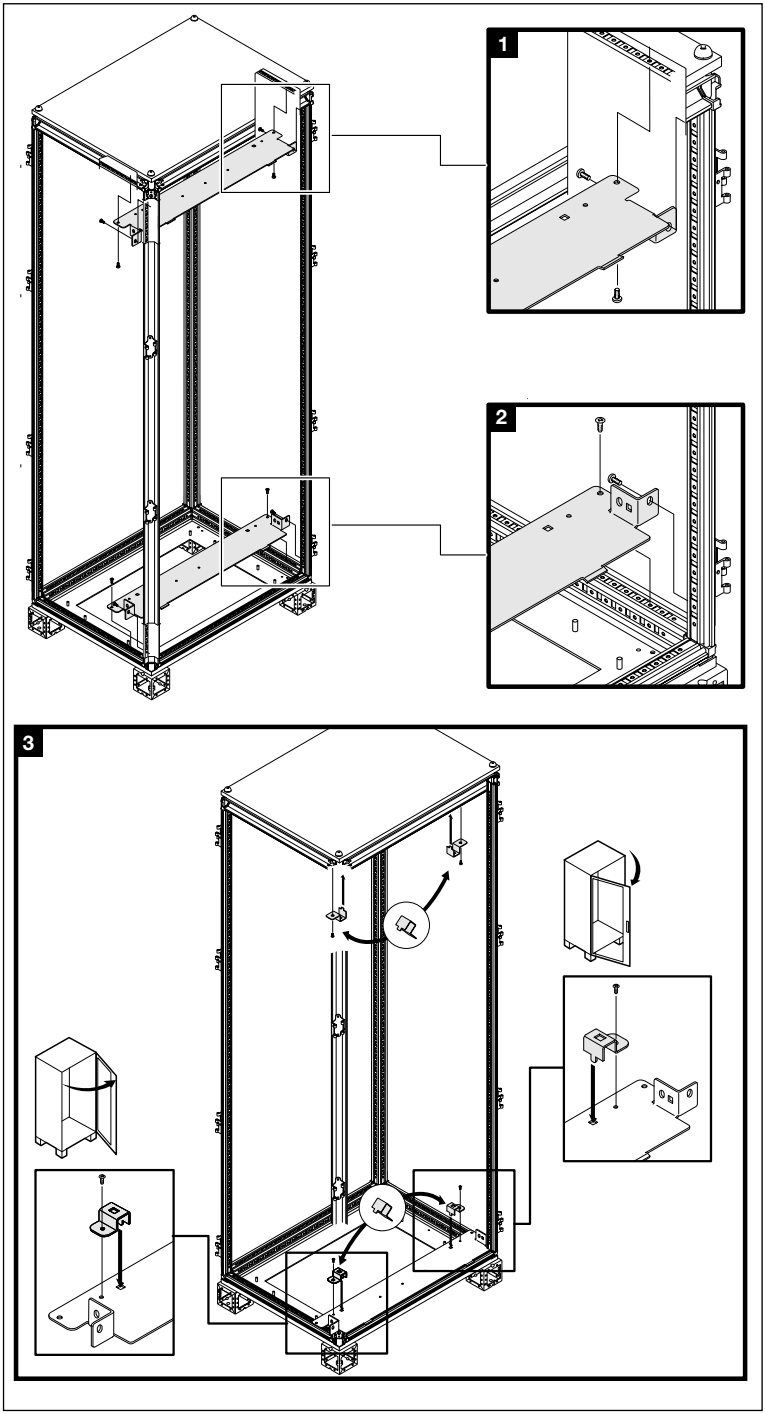

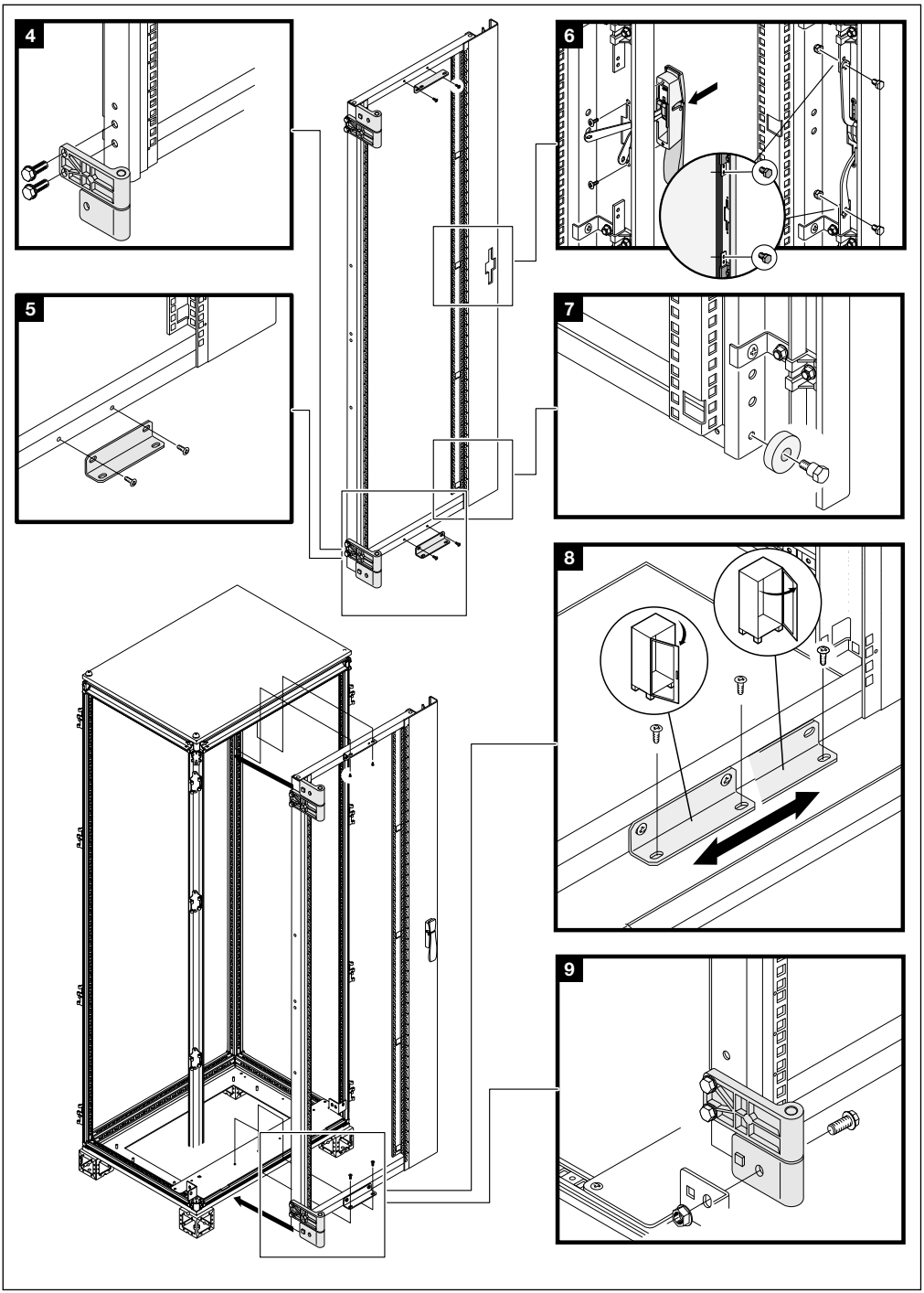
4
5
6
7
8
9

EV3500

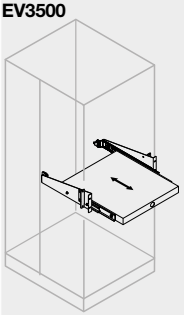

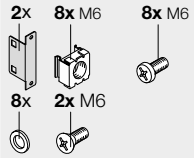
2x
8x M6
8x M6
8x
2x M6

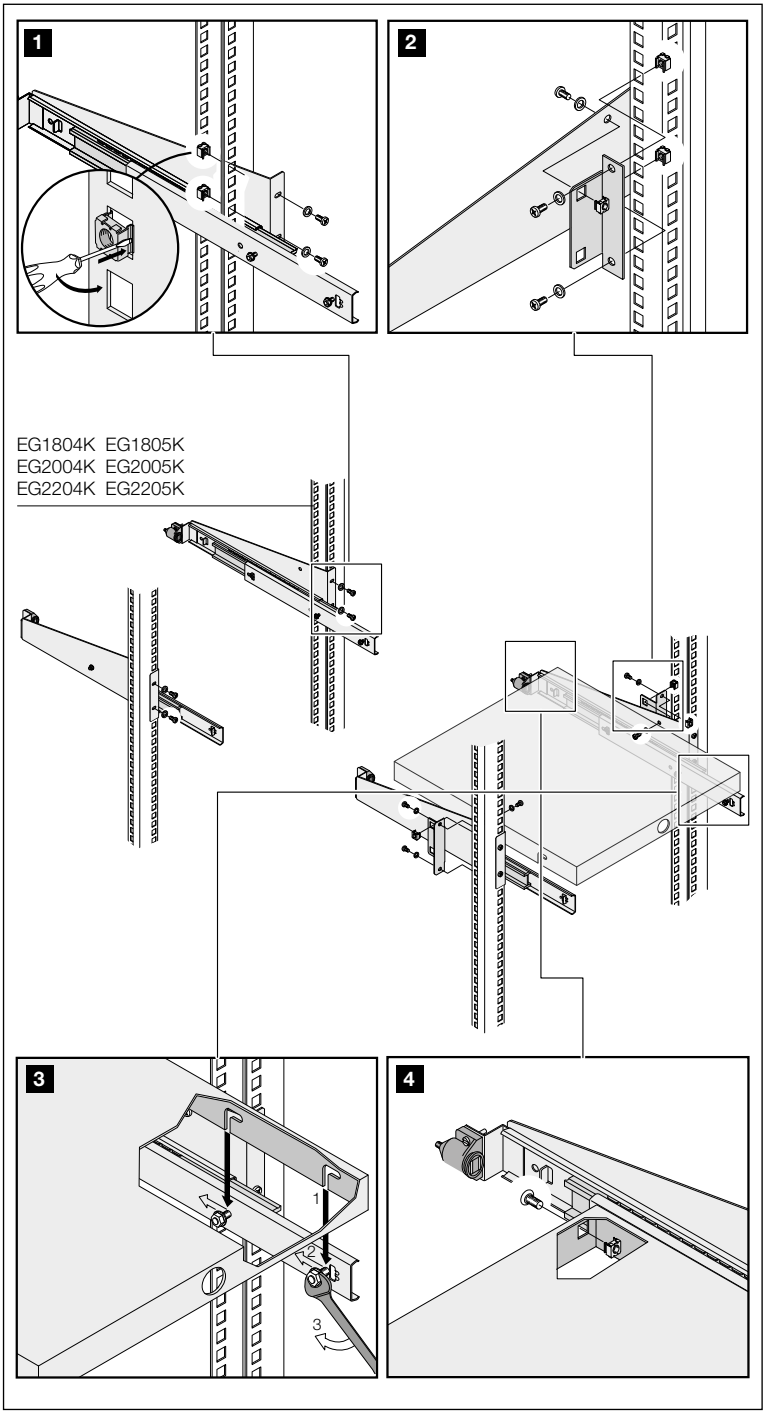
1
2
EG1804K EG1805K
EG2004K EG2005K
EG2204K EG2205K
3
1
2
3
4

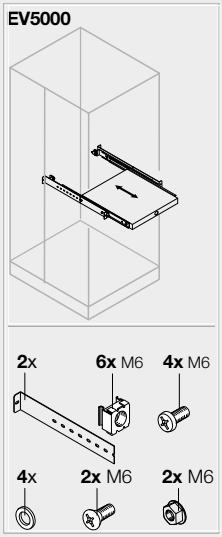
EV5000
2x
6x M6
4x M6
4x
2x M6
2x M6

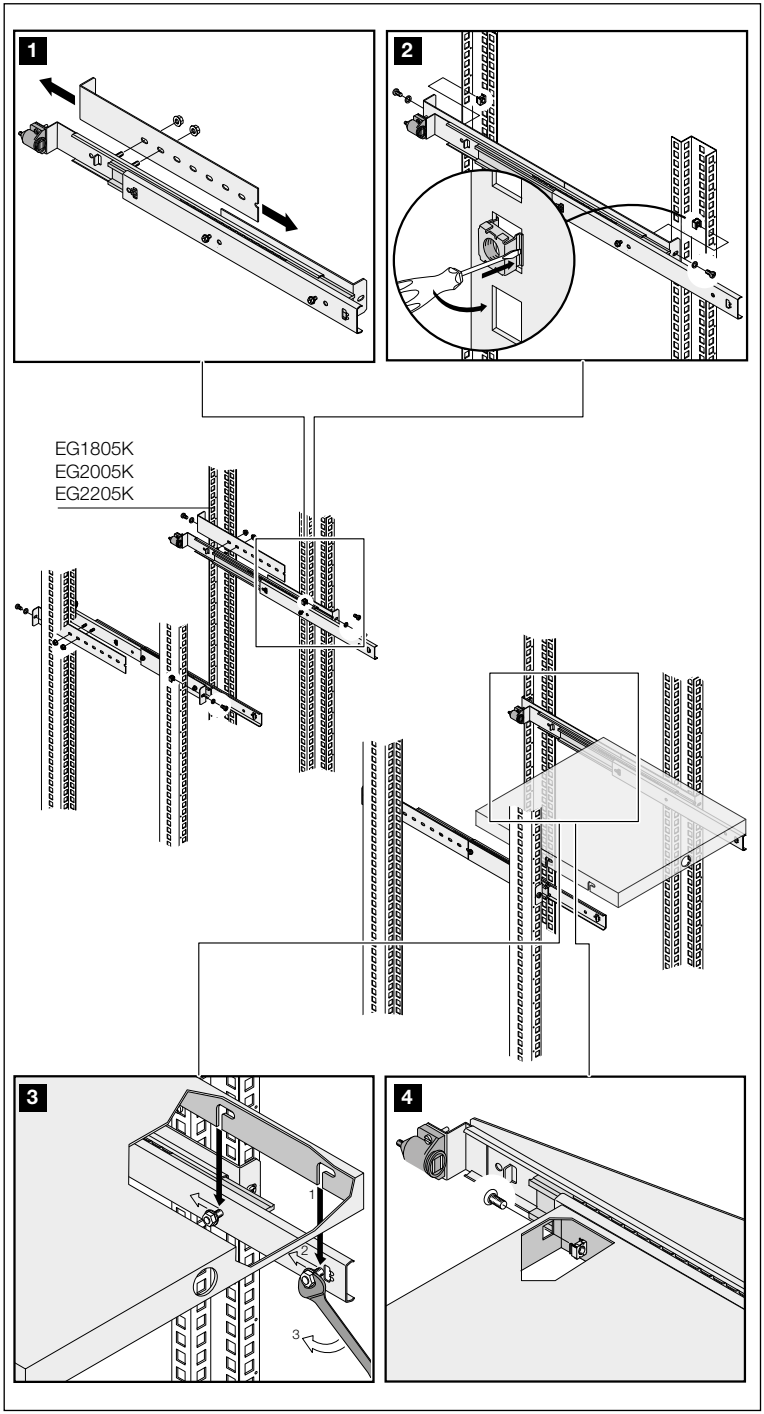
1
2
EG1805K
EG2005K
EG2205K
3
1
2
3
4

EE0640-EE0650-EE0660
EE0680-EE0840-EE0850
EE0860-EE0880-EE1040
EE1050-EE1060-EE1080

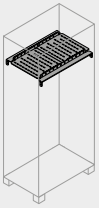

16xM6

EE0340-EE0355-EE0360
EE0380-EE0240-EE0250
EE0260-EE0280-EE0440
EE0450-EE0460-EE0480

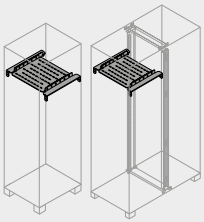

12xM6

EE2600-EE2800-EE2100

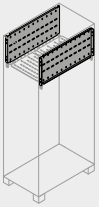

EE2020-EE2040-EE2030

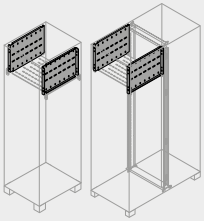

8xM6

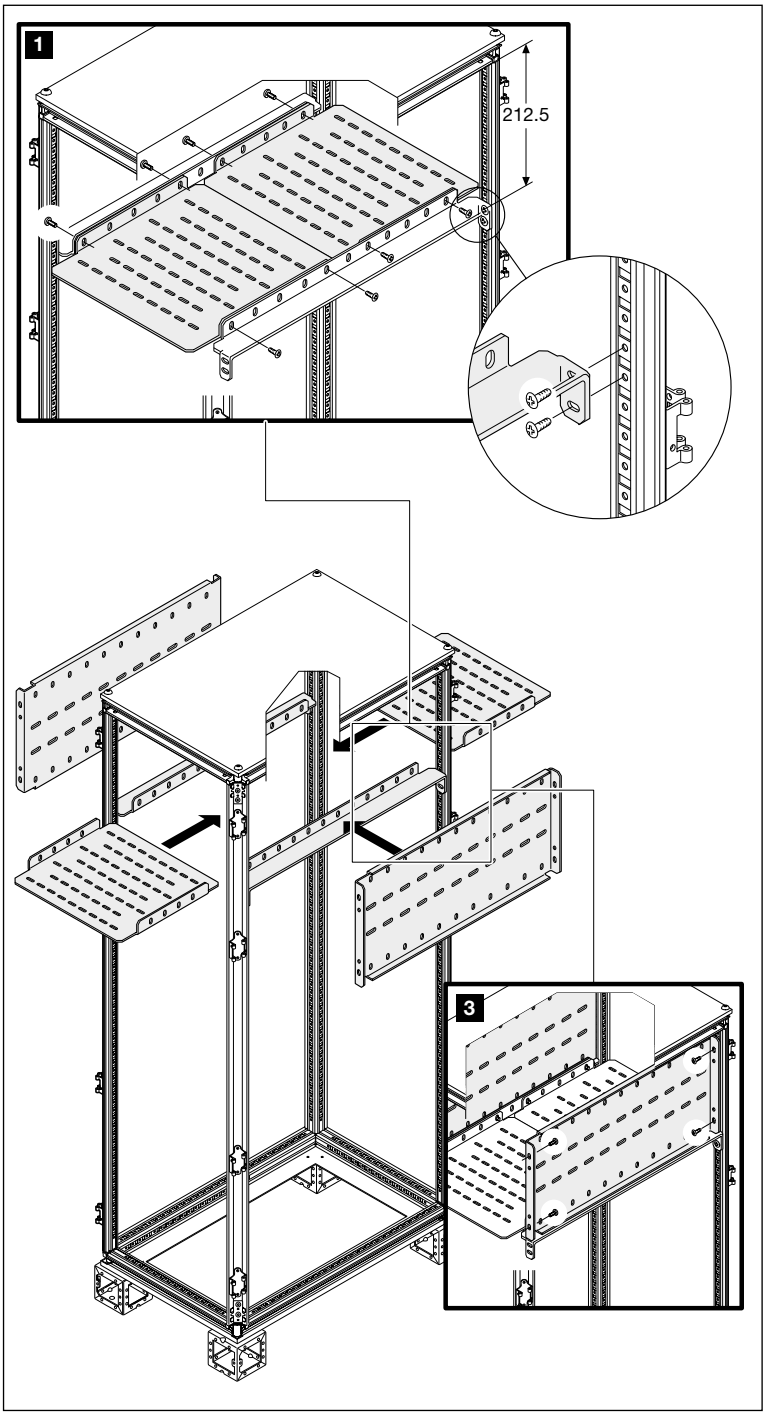

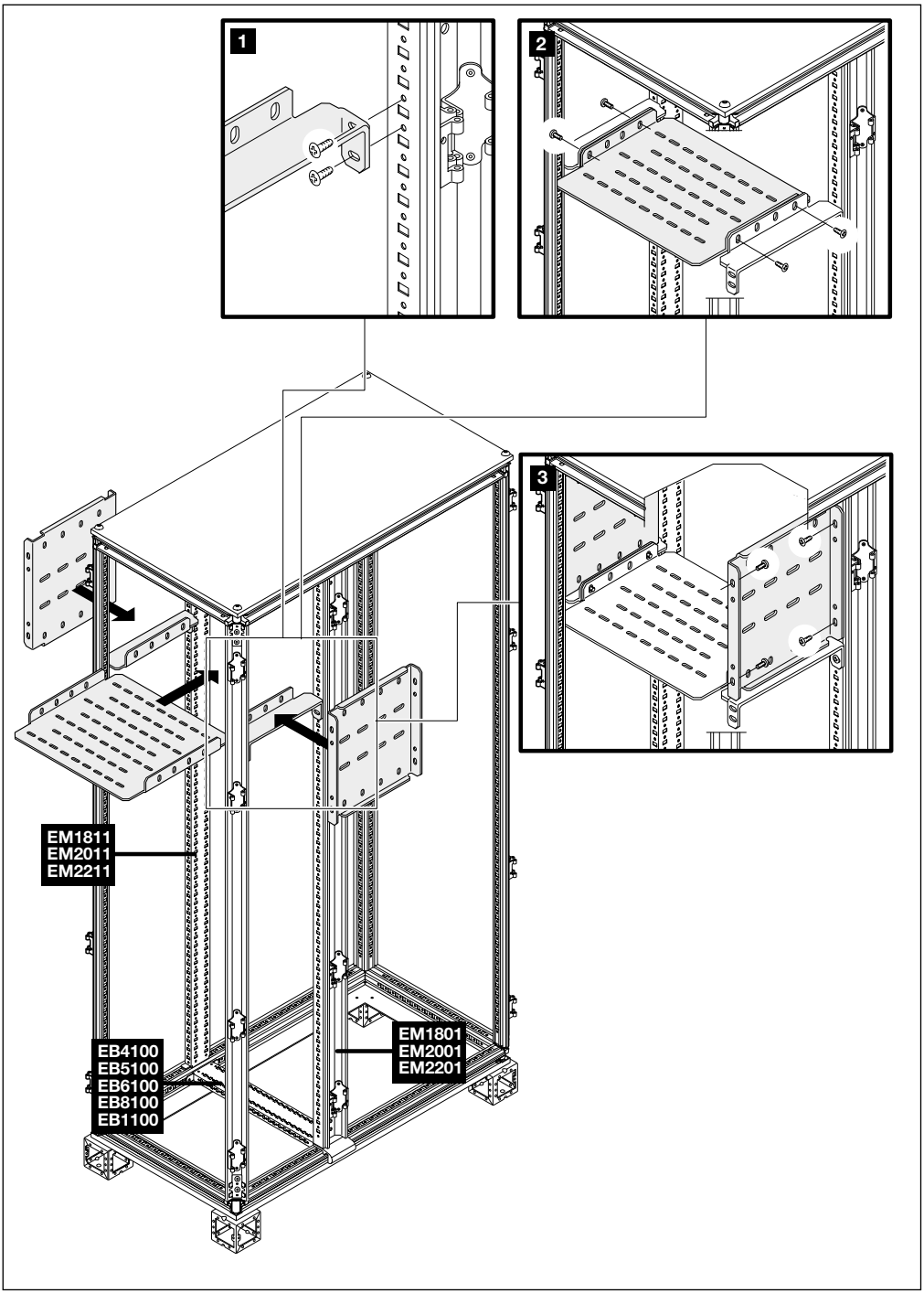
1
2
3
EM1811
EM2011
EM2211
EB4100
EB5100
EB6100
EB8100
EB1100
EM1801
EM2001
EM2201

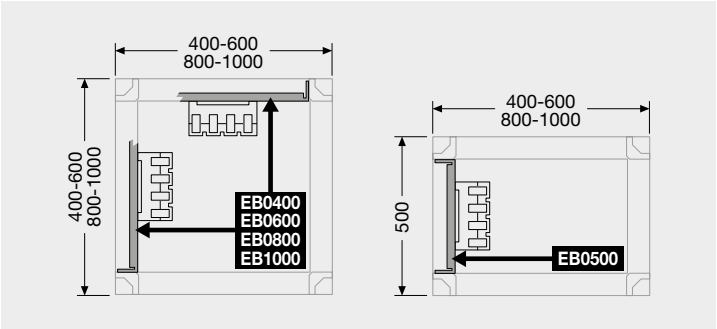

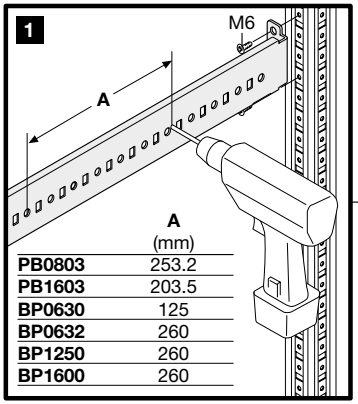

	A (mm)
PB0803	253.2
PB1603	203.5
BP0630	125
BP0632	260
BP1250	260
BP1600	260

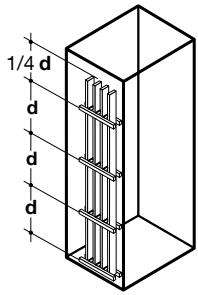

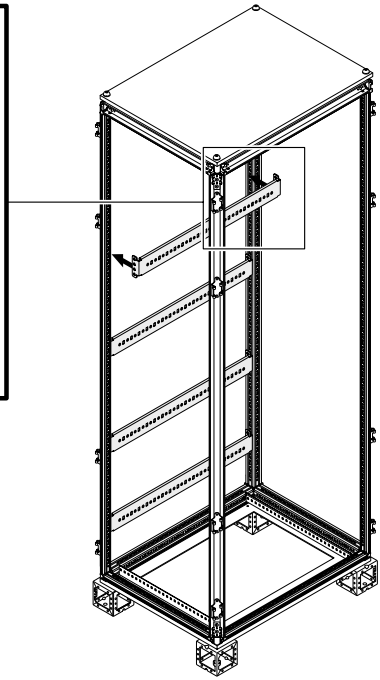

	16 kA		20 kA		23 kA		25 kA		32 kA		35 kA		50 kA		65 kA		
	d max (mm)		d max (mm)		d max (mm)		d max (mm)		d max (mm)		d max (mm)		d max (mm)		d max (mm)		
BA0400							4x	550			5x	425					**PB0803**
							4x	550			4x	550					**PB1603**
BA0800							4x	550			5x	425					**PB0803**
							4x	550			4x	550					**PB1603**
BA1250							4x	550			4x	550	6x	350	9x	225	**PB0803**
BA1600							4x	550			4x	550	6x	350	9x	225	**PB1603**
BR0250	4x	500	6x	350	10x	200											
BR0400	4x	500	6x	350	10x	200											**BP0630**
BR0630			4x	600	4x	600			9x	210							
BR4005							7x	300			9x	225					
BR6305							6x	375			7x	275	9x	225			
BR8005							5x	425			7x	300	9x	225			**BP1250**
BR1250							4x	500			6x	375	8x	250			
BR1600							3x	1000			3x	1000	4x	600	6x	375	**BP1600**

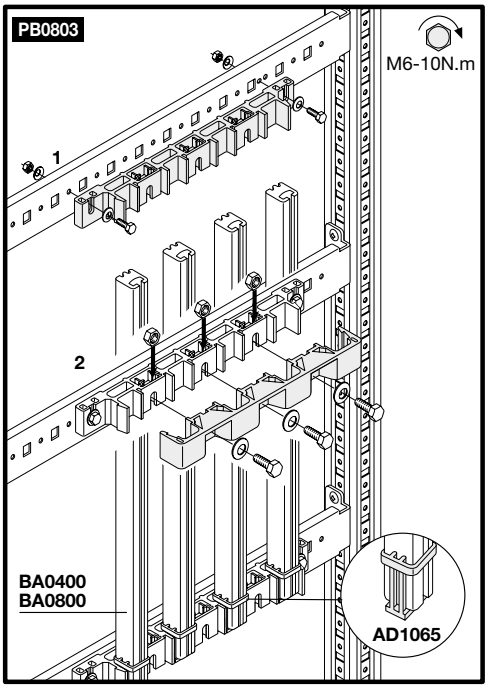
PB0803
M6-10N.m
1
2
BA0400
BA0800
AD1065

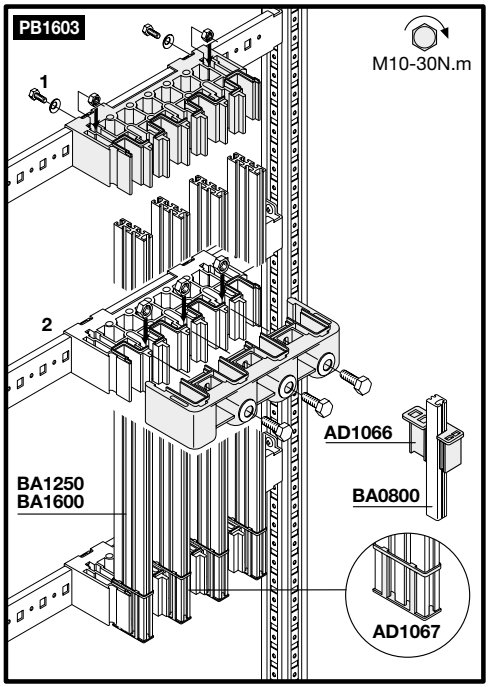
PB1603
M10-30N.m
1
2
AD1066
BA1250
BA1600
BA0800
AD1067

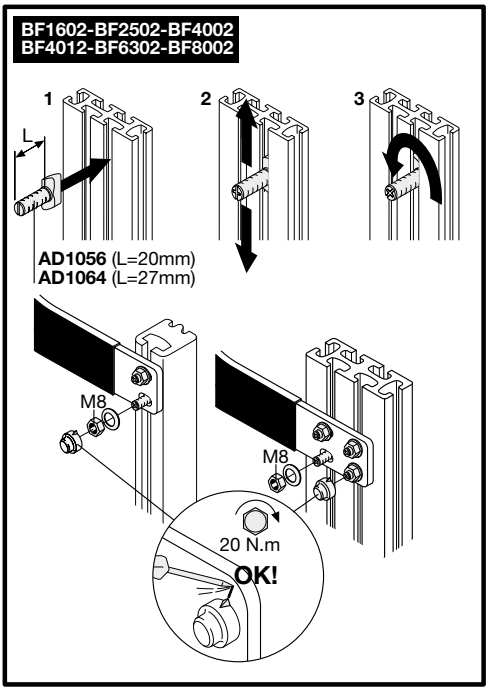
BF1602-BF2502-BF4002
BF4012-BF6302-BF8002
1
2
3
L
AD1056 (L=20mm)
AD1064 (L=27mm)
M8
M8
20 N.m
OK!

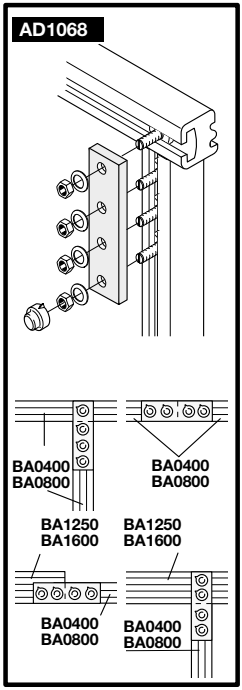
AD1068
BA0400
BA0800
BA0400
BA0800
BA1250
BA1600
BA1250
BA1600
BA0400
BA0800
BA0400
BA0800

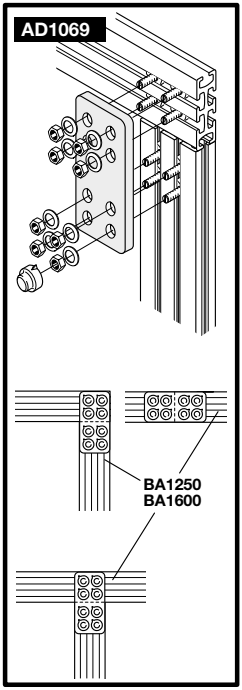
AD1069
BA1250
BA1600

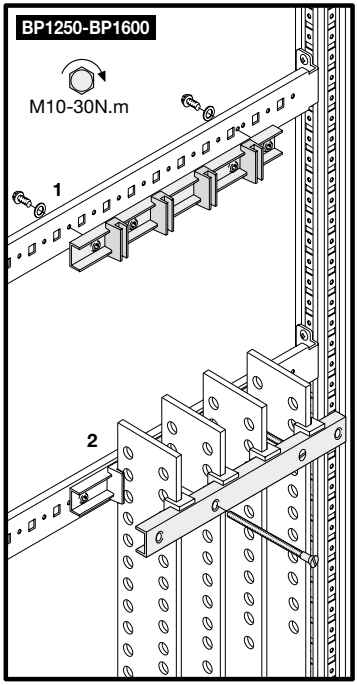
BP1250-BP1600
M10-30N.m
1
2

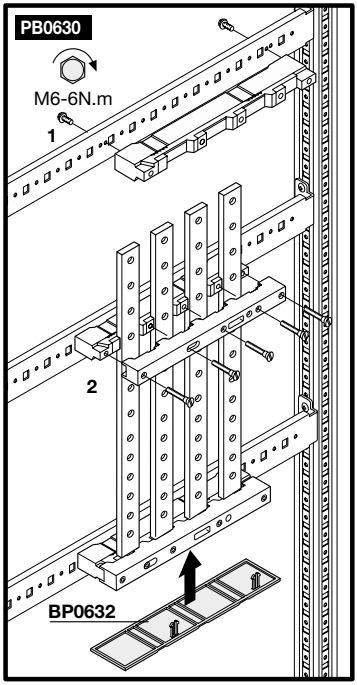
PB0630
M6-6N.m
1
2
BP0632

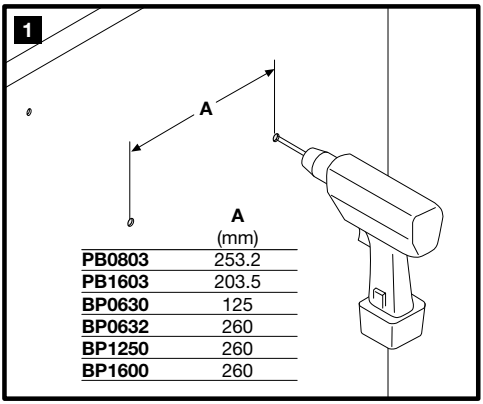

	A (mm)
PB0803	253.2
PB1603	203.5
BP0630	125
BP0632	260
BP1250	260
BP1600	260

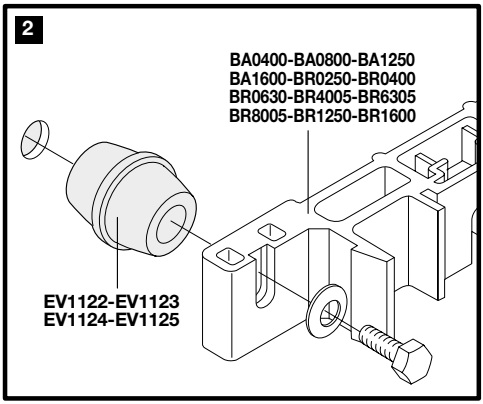

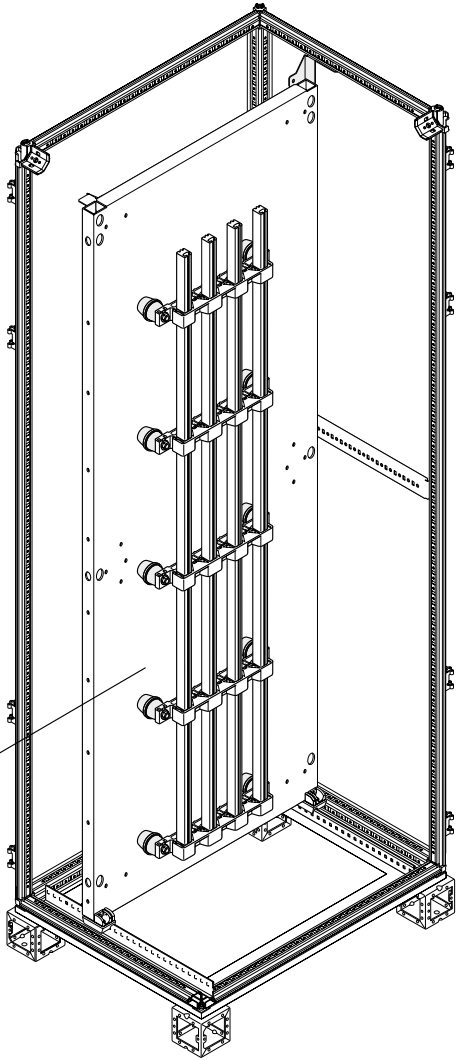

EA1840-EA1860-EA1880
EA1810-EA1812-EA1816
EA1800-EA2040-EA2060
EA2080-EA2010-EA2012
EA2016-EA2000-EA2240
EA2260-EA2280-EA2210
EA2212-EA2216-EA2200

EA2061-EA3061-EA4061
EA5061-EA6061-EA8061
EA2081-EA3081-EA4081
EA5081-EA6081-EA8081

EA1940-EA1960-EA1980
EA1910-EA1912-EA2140
EA2160-EA2180-EA2110
EA2112-EA2340-EA2360
EA2380-EA2310-EA2312

EV1147-EV1148

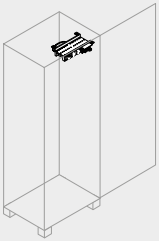

2xM6 **2**x

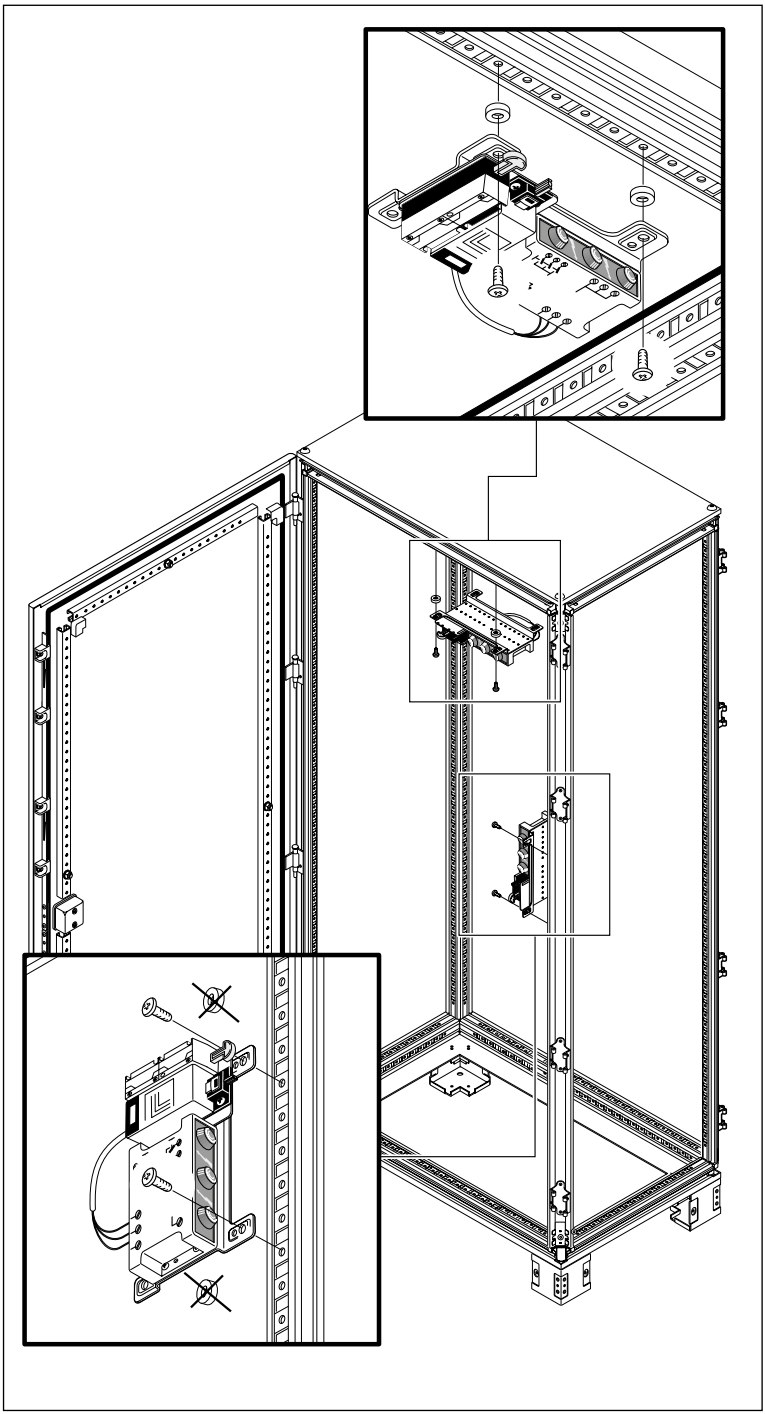

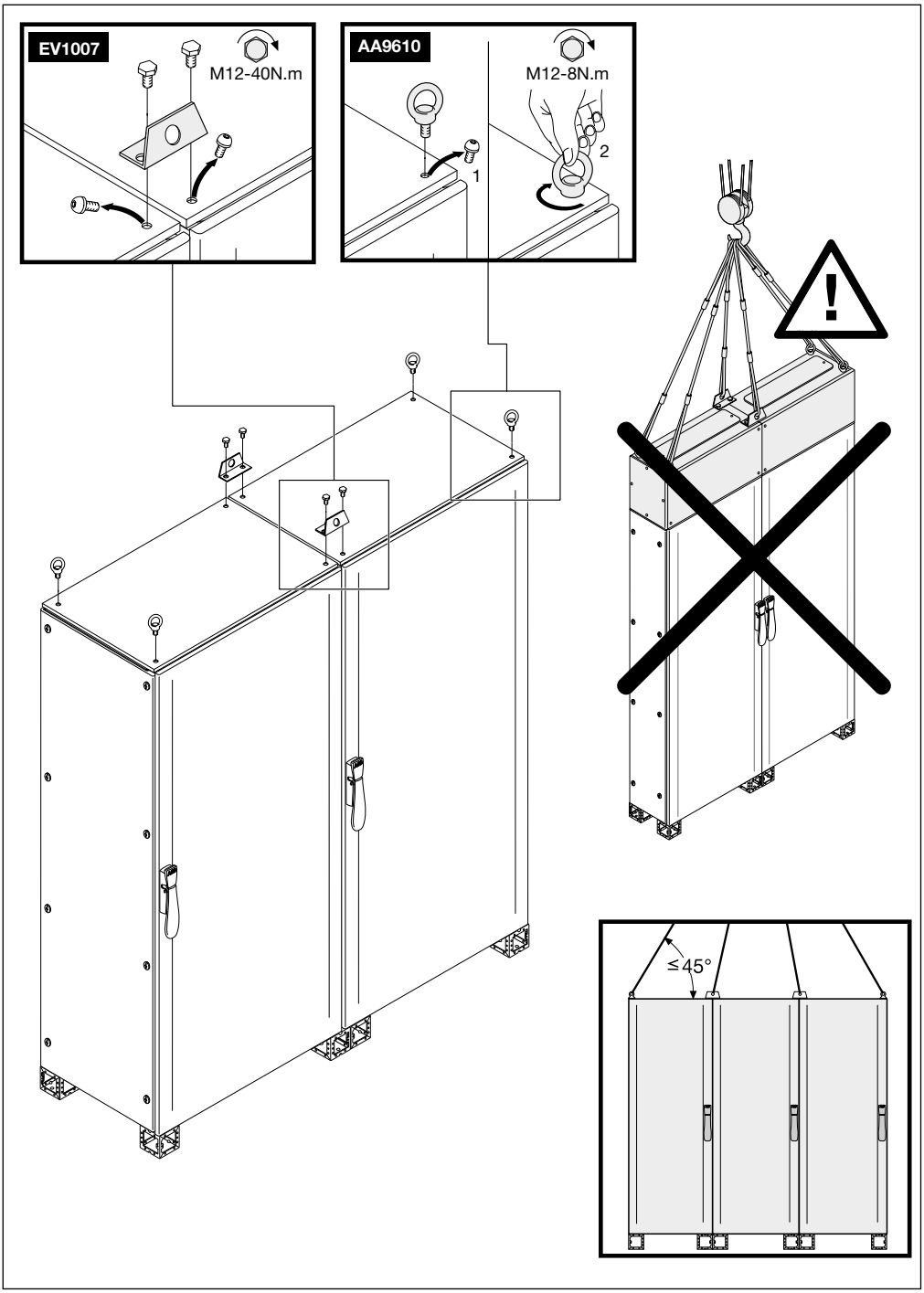
EV1007
M12-40N.m
AA9610
M12-8N.m
1
2
≤ 45°

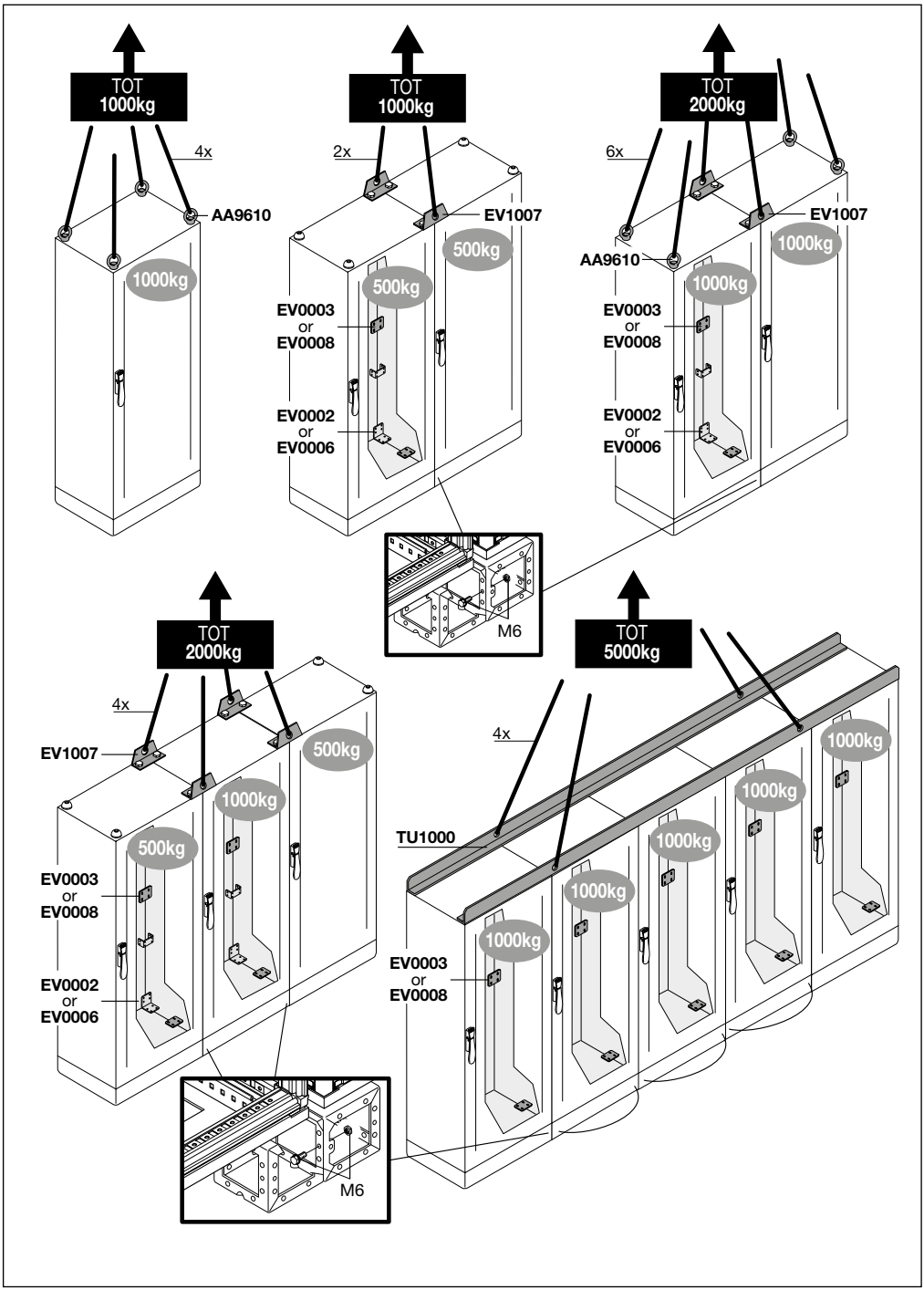
TOT
1000kg
4x
AA9610
1000kg
TOT
1000kg
2x
EV1007
500kg
500kg
EV0003
or
EV0008
EV0002
or
EV0006
TOT
2000kg
6x
EV1007
AA9610
1000kg
1000kg
EV0003
or
EV0008
EV0002
or
EV0006
M6
TOT
2000kg
4x
EV1007
500kg
1000kg
500kg
EV0003
or
EV0008
EV0002
or
EV0006
M6
TOT
5000kg
4x
TU1000
1000kg
1000kg
1000kg
1000kg
1000kg
EV0003
or
EV0008

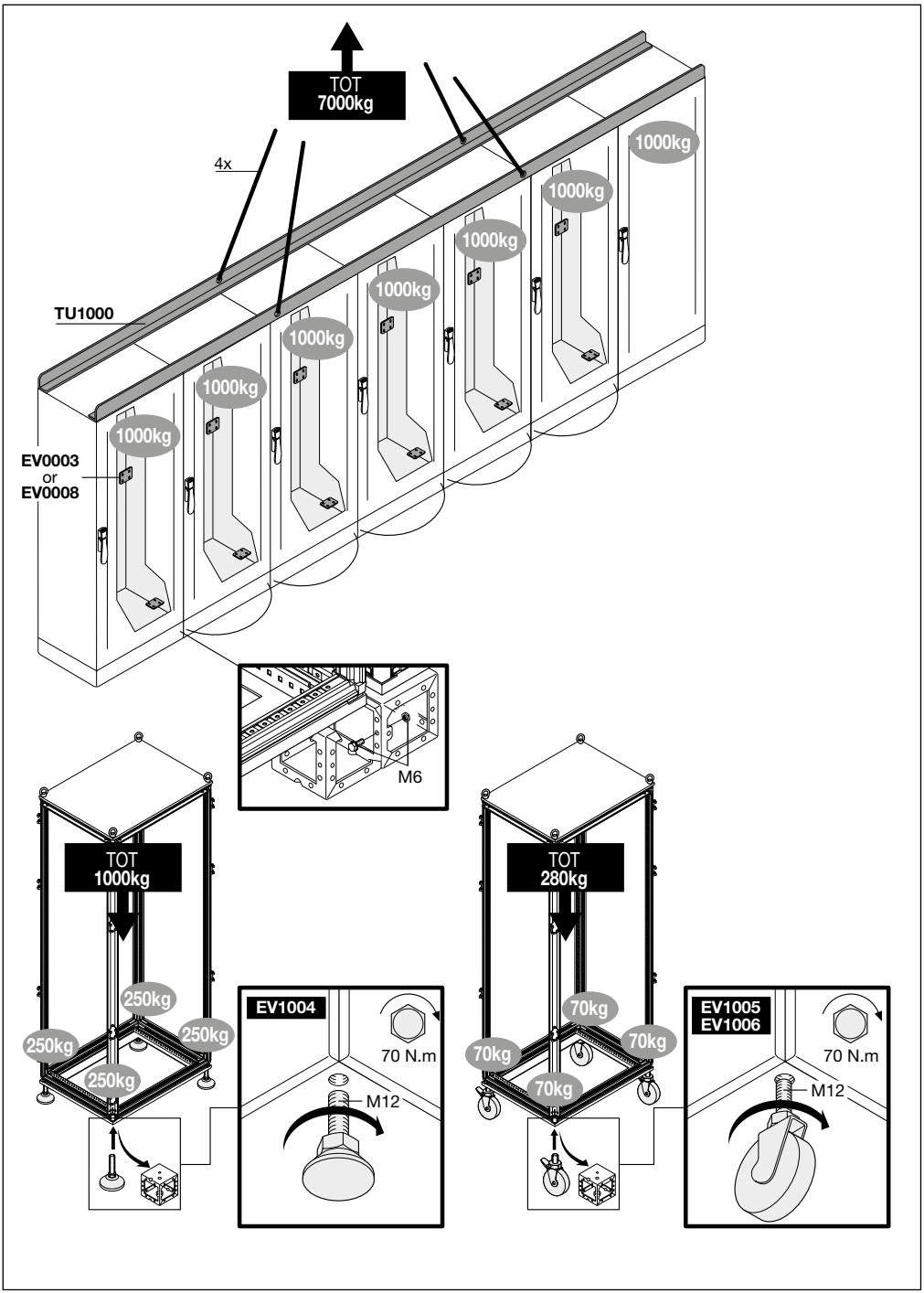
TOT
7000kg
4x
TU1000
1000kg
1000kg
1000kg
1000kg
1000kg
1000kg
1000kg
EV0003
or
EV0008
M6
TOT
1000kg
250kg
250kg
250kg
250kg
EV1004
70 N.m
M12
TOT
280kg
70kg
70kg
70kg
70kg
EV1005
EV1006
70 N.m
M12

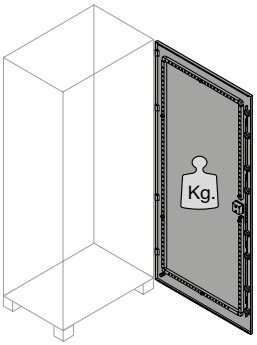

Kg.
50

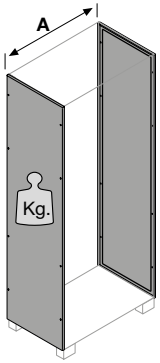

A (mm)	Kg.
>800	90
≤800	110

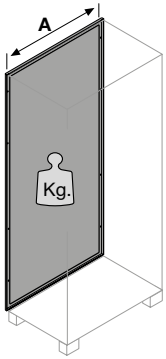

A (mm)	Kg.
>800	90
≤800	110

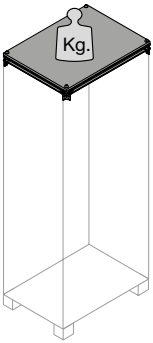

Kg.
40

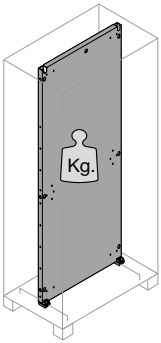

Kg.
500

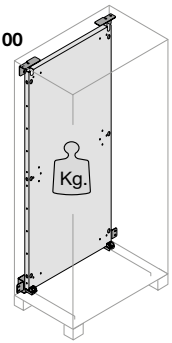

Kg.
600

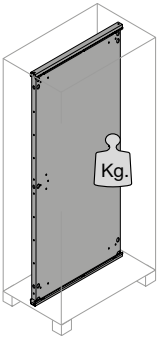

Kg.
500

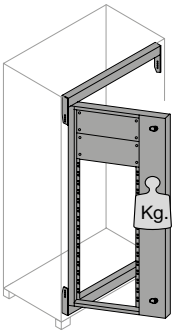

Kg.
90

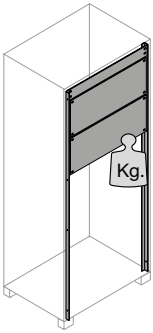

Kg.
90

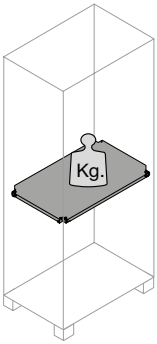

Kg.
120

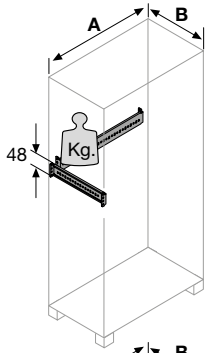

	A/B (mm)	**Kg.**
EB0400	400	110
EB0500	500	110
EB0600	600	100
EB0800	800	90
EB1000	1000	70
EB1200	1200	50

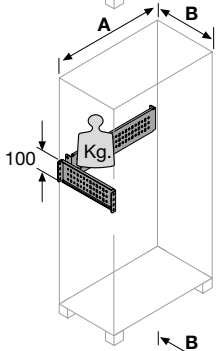

	A/B (mm)	**Kg.**
EB0440	400	220
EB0550	500	210
EB0660	600	210
EB0880	800	185
EB1010	1000	160
EB1020	1200	140

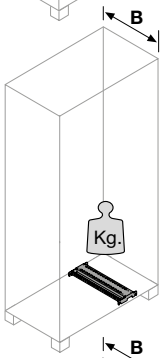

	B (mm)	**Kg.**
EB4100	400	210
EB5100	500	190
EB6100	600	175
EB8100	800	150
EB1100	1200	130

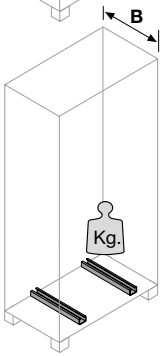

	B (mm)	**Kg.**
EB6102	600	320
EB8102	800	250
EB1102	1000	200

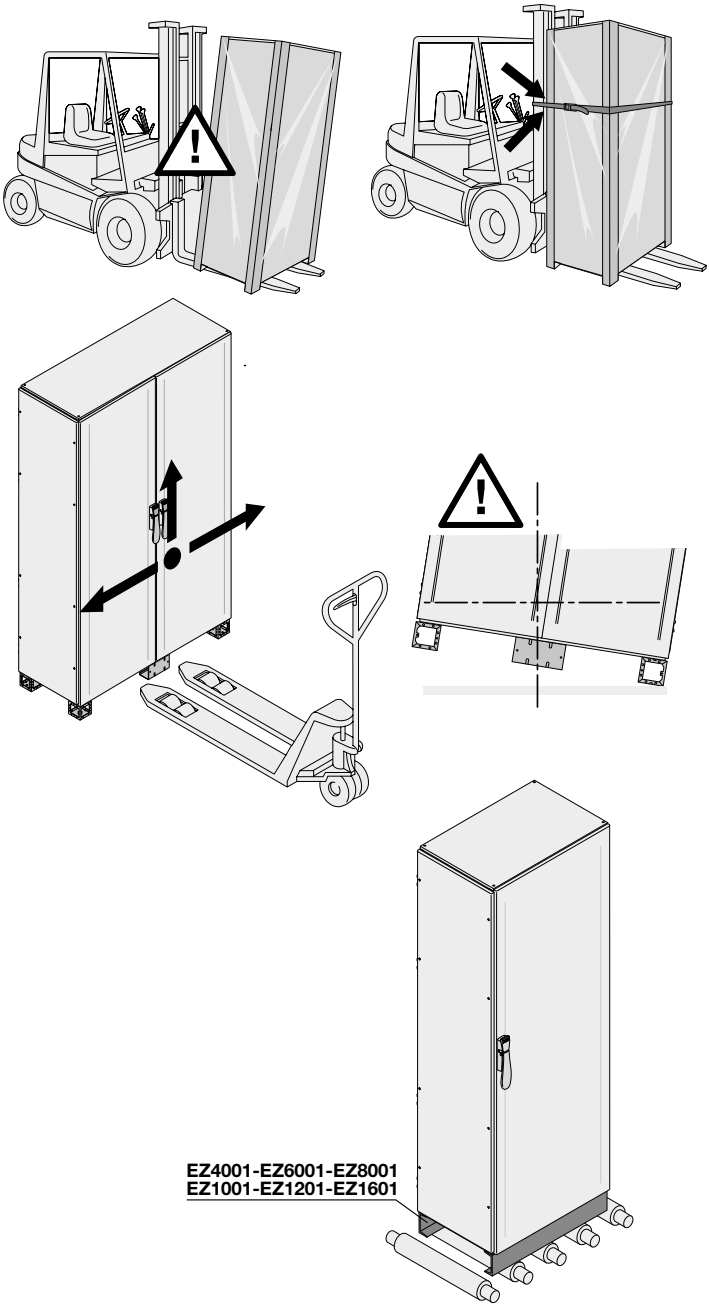
EZ4001-EZ6001-EZ8001
EZ1001-EZ1201-EZ1601

CODE	PAG.
codice	pagina
AA1560	12/13
AA1570	12/13
AA6120	12/13
AA6140	12/13
AA6141	12/13
AA6160	12/13
AA6180	12/13
AA6190	12/13
AA6200	12/13
AA8004	12/13
AA9610	65/66
AD1058	12/13
AD1068	61
AD1069	61
BA0400	61
BA0800	61
BA1250	61
BA1600	61
BF1602	61
BF2502	61
BF4002	61
BF4012	61
BF6302	62
BF8002	62
BP1250	62
BP1600	63
BR0250	63
BR0400	63
BR0630	63
BR1250	63
BR1600	63
BR4005	63
BR6305	63
BR8005	63
CR0181	16/17
EA0018	38
EA0020	38
EA0022	38
EA0400	31
EA0600	31
EA0802	31
EA1000	31
EA1061	30
EA1081	30

CODE	PAG.
EA1200	31
EA1602	31
EA1800	36/37
EA1800	63
EA1810	32/33
EA1810	63
EA1812	32/33
EA1812	63
EA1816	63
EA1817	32/33
EA1840	63
EA1841	32/33
EA1860	32/33
EA1880	32/33
EA1910	31
EA1912	31
EA1916	31
EA1940	31
EA1960	31
EA1981	31
EA2000	36/37
EA2010	32/33
EA2013	32/33
EA2016	32/33
EA2040	32/33
EA2060	32/33
EA2062	30
EA2080	32/33
EA2081	30
EA2100	32/33
EA2101	30
EA2102	34/35
EA2110	31
EA2112	31
EA2113	36/37
EA2115	32/33
EA2116	31
EA2117	32/33
EA2118	36/37
EA2140	31
EA2161	31
EA2180	31
EA2200	36/37
EA2210	32/33
EA2212	32/33

CODE	PAG.
EA2216	32/33
EA2240	32/33
EA2260	32/33
EA2280	32/33
EA2310	31
EA2312	31
EA2316	31
EA2340	31
EA2360	31
EA2380	31
EA3061	30
EA3081	30
EA4061	30
EA4081	30
EA5061	30
EA5081	30
EA6061	30
EA6081	30
EA8061	30
EA8081	30
EB0400	23
EB0440	23
EB0500	23
EB0550	23
EB0600	23
EB0660	23
EB0800	23
EB0880	23
EB1000	23
EB1010	23
EB1011	23
EB1020	23
EB1060	23
EB1080	23
EB1100	14
EB1101	34/35
EB1200	23
EB4100	14
EB4101	34/35
EB4810	23
EB4860	23
EB4880	23
EB5100	14
EB5101	34/35
EB6100	14

CODE	PAG.
EB6101	34/35
EB8100	14
EB8101	34/35
EC1810K	12/13
EC1811K	12/13
EC1831K	12/13
EC1840K	12/13
EC1841K	12/13
EC1851K	12/13
EC1860K	12/13
EC1861K	12/13
EC1880FC5K	12/13
EC1880FC6K	12/13
EC1880FC8K	12/13
EC1880FV6K	12/13
EC1880FV8K	12/13
EC1880K	12/13
EC1880VC2K	12/13
EC1880VC4K	12/13
EC1881K	12/13
EC1882	12/13
EC1884	12/13
EC2011K	12/13
EC2012K	12/13
EC2031K	12/13
EC2040K	12/13
EC2041K	12/13
EC2051K	12/13
EC2060EMCKM	12/13
EC2060K	12/13
EC2061K	12/13
EC2080EMCKM	12/13
EC2080FC5K	12/13
EC2080FC6K	12/13
EC2080FC8K	12/13
EC2080FV6K	12/13
EC2080FV8K	12/13
EC2080K	12/13
EC2080VC2K	12/13
EC2080VC4K	12/13
EC2081K	12/13
EC2082	12/13
EC2084	12/13
EC2210K	12/13
EC2211K	12/13

CODE	PAG.
EC2232K	12/13
EC2240K	12/13
EC2241K	12/13
EC2251K	12/13
EC2260K	12/13
EC2261K	12/13
EC2280FC5K	12/13
EC2280FC6K	12/13
EC2280FC8K	12/13
EC2280FV6K	12/13
EC2280FV8K	12/13
EC2280K	12/13
EC2280VC2K	12/13
EC2280VC4K	12/13
EC2281K	12/13
EC2282	12/13
EC2284	12/13
ED1802SK	15
ED1804SK	15
ED1810SK	15
ED1812SK	15
ED1816SK	15
ED2002SK	15
ED2004SK	15
ED2010SK	15
ED2012SK	15
ED2016SK	15
ED2202SK	15
ED2204SK	15
ED2210SK	15
ED2212SK	15
ED2216SK	15
EE0024	45
EE0240	58
EE0250	58
EE0260	58
EE0280	58
EE0340	58
EE0355	58
EE0360	58
EE0380	58
EE0440	58
EE0450	58
EE0460	58
EE0480	58

CODE	PAG.
EE0640	58
EE0650	58
EE0660	58
EE0680	58
EE0840	58
EE0850	58
EE0860	58
EE0880	58
EE1001K	44
EE1002K	44
EE1003K	44
EE1004K	44
EE1011	44
EE1040	58
EE1041	44
EE1050	58
EE1051	44
EE1060	58
EE1061	44
EE1080	58
EE1081	44
EE1810K	22
EE1811	27
EE1841	27
EE1851	27
EE1852	45
EE1860K	22
EE1861	27
EE1862	45
EE1880K	22
EE1881	27
EE1906K	22
EE1908K	22
EE1910K	22
EE2010K	22
EE2011	27
EE2020	58
EE2030	58
EE2040	58
EE2041	27
EE2051	27
EE2052	45
EE2060K	22
EE2061	27
EE2062	45

CODE	PAG.
EE2080K	22
EE2081	27
EE2100	58
EE2106K	22
EE2108K	22
EE2110K	22
EE2210K	22
EE2211	27
EE2241	27
EE2251	27
EE2252	45
EE2260K	22
EE2261	27
EE2262	45
EE2280K	22
EE2281	27
EE2306K	22
EE2308K	22
EE2310K	22
EE2406	45
EE2410	45
EE2416	45
EE2600	58
EE2800	58
EE4041	44
EE4051	44
EE6041	44
EE6051	44
EE6061	44
EE8041	44
EE8051	44
EE8061	44
EE8081	44
EF1010	39
EF1011	39
EF1012	39
EF1040	39
EF1041	39
EF1042	39
EF1051	39
EF1052	39
EF1053	39
EF1060	39
EF1061	39
EF1062	39

CODE	PAG.
EF1080	39
EF1081	39
EF1082	39
EF4010	39
EF4011	39
EF4012	39
EF4040	39
EF4041	39
EF4042	39
EF4050	39
EF4051	39
EF4052	39
EF4060	39
EF4061	39
EF4063	39
EF4080	39
EF4081	39
EF4082	39
EF6010	39
EF6011	39
EF6012	39
EF6040	39
EF6041	39
EF6043	39
EF6050	39
EF6051	39
EF6052	39
EF6060	39
EF6061	39
EF6062	39
EF6080	39
EF6081	39
EF6082	39
EF8010	39
EF8011	39
EF8012	39
EF8040	39
EF8041	39
EF8042	39
EF8050	39
EF8051	39
EF8052	39
EF8060	39
EF8061	39
EF8062	39

CODE	PAG.
EF8080	39
EF8081	39
EF8082	39
EG0500K	50/51
EG0900K	50/51
EG1300K	50/51
EG1800	50/51
EG1801K	52
EG1803K	53
EG1804K	54
EG1880	50/51
EG1902	50/51
EG1902	52
EG1902	53
EG1903	50/51
EG1903	52
EG1903	53
EG1904	50/51
EG1904	52
EG1904	53
EG1905	50/51
EG1905	52
EG1905	53
EG1906	50/51
EG1906	52
EG1906	53
EG1907	50/51
EG1907	52
EG1907	53
EG1908	50/51
EG1908	52
EG1908	53
EG1909	50/51
EG1909	52
EG1909	53
EG1910	50/51
EG1910	52
EG1910	53
EG1911	50/51
EG1911	52
EG1911	53
EG1912	50/51
EG1912	52
EG1912	53
EG1913	50/51

CODE	PAG.
EG1913	52
EG1913	53
EG1914	50/51
EG1914	52
EG1914	53
EG1915	50/51
EG1915	52
EG1915	53
EG1916	50/51
EG1916	52
EG1916	53
EG1917	50/51
EG1917	52
EG1917	53
EG1918	50/51
EG1918	52
EG1918	53
EG1920	50/51
EG1920	52
EG1920	53
EG1991	50/51
EG1991	52
EG1991	53
EG1999	50/51
EG1999	52
EG1999	53
EG2000	50/51
EG2001K	52
EG2003K	53
EG2004K	54
EG2080	50/51
EG2200	50/51
EG2201K	52
EG2203K	53
EG2204K	54
EG2280	50/51
EH0018	47/48/49
EH0024	47/48/49
EH0029	47/48/49
EH0036	47/48/49
EH0562K	47/48/49
EH0582K	47/48/49
EH1060	40
EH1060	42
EH1061K	40

CODE	PAG.
EH1061K	42
EH1062K	47/48/49
EH1080	40
EH1080	42
EH1081K	40
EH1081K	42
EH1082K	47/48/49
EH1518K	47/48/49
EH1524K	47/48/49
EH1529K	47/48/49
EH1536K	47/48/49
EH1562K	47/48/49
EH1582K	47/48/49
EH1800	47/48/49
EH2000	47/48/49
EH2018K	47/48/49
EH2024K	47/48/49
EH2029K	47/48/49
EH2036K	47/48/49
EH2060	40
EH2060	42
EH2061K	40
EH2061K	42
EH2062K	47/48/49
EH2065	47/48/49
EH2067K	40
EH2067K	42
EH2081K	40
EH2081K	42
EH2082K	47/48/49
EH2085	47/48/49
EH2087K	40
EH2087K	42
EH2180	40
EH2180	42
EH2200	47/48/49
EH2272K	47/48/49
EH2297K	47/48/49
EH2472K	47/48/49
EH3018K	47/48/49
EH3029K	47/48/49
EH3060	40
EH3060	42
EH3061K	40
EH3061K	42

CODE	PAG.
EH3063K	47/48/49
EH3065	47/48/49
EH3080	40
EH3080	42
EH3081K	40
EH3081K	42
EH3082K	47/48/49
EH3085	47/48/49
EH3272K	47/48/49
EH3296K	47/48/49
EH3472K	47/48/49
EH4061K	40
EH4061K	42
EH4062K	47/48/49
EH4063	40
EH4063	42
EH4065	47/48/49
EH4080	40
EH4080	42
EH4081K	40
EH4081K	42
EH4082K	47/48/49
EH4085	47/48/49
EH5060	40
EH5060	42
EH5061K	40
EH5061K	42
EH5062K	47/48/49
EH5080	40
EH5080	42
EH5081K	40
EH5081K	42
EH5082K	47/48/49
EH6010K	40
EH6010K	42
EH6018K	47/48/49
EH6025K	47/48/49
EH6029K	47/48/49
EH6036K	47/48/49
EH6060	40
EH6060	42
EH6061K	40
EH6061K	42
EH6062K	47/48/49
EH6080	40

CODE	PAG.
EH6080	42
EH6082K	47/48/49
EH6083K	40
EH6083K	42
EH7262K	40
EH7262K	42
EH7282K	40
EH7282K	42
EH7284K	40
EH7284K	42
EH8010K	40
EH8010K	42
EH8060	40
EH8060	42
EH8062K	40
EH8062K	42
EH8080	40
EH8080	42
EH8081K	40
EH8081K	42
EK1010KN	11
EK1040KN	11
EK1050KN	11
EK1060KN	11
EK1080KN	11
EK1240KN	11
EK1250KN	11
EK1260KN	11
EK1280KN	11
EK3040KN	11
EK3050KN	11
EK3060KN	11
EK3080KN	11
EK4010KN	11
EK4040KN	11
EK4050KN	11
EK4060KN	11
EK4080KN	11
EK6010KN	11
EK6040KN	11
EK6050KN	11
EK6060KN	11
EK6080KN	11
EK8010KN	11
EK8040KN	11

CODE	PAG.
EK8050KN	11
EK8060KN	11
EK8080KN	11
EL1810K	24
EL1811K	24
EL1840K	24
EL1841K	24
EL1850K	24
EL1851K	24
EL1860K	24
EL1861K	24
EL1880K	24
EL1881K	24
EL2011K	24
EL2012K	24
EL2040K	24
EL2041K	24
EL2050K	24
EL2051K	24
EL2060EMCK	24
EL2060K	24
EL2061K	24
EL2080EMCK	24
EL2080K	24
EL2081K	24
EL2210K	24
EL2211K	24
EL2240K	24
EL2241K	24
EL2250K	24
EL2251K	24
EL2260K	24
EL2261K	24
EL2280K	24
EL2281K	24
EM1800	11
EM1802	40
EM1803	14
EM1803	42
EM1804	50/51
EM1805	19
EM1811	14
EM2000	11
EM2002	40
EM2003	14

CODE	PAG.
EM2003	42
EM2004	50/51
EM2005	19
EM2011	14
EM2200	11
EM2202	40
EM2203	14
EM2203	42
EM2204	50/51
EM2205	19
EM2211	14
ER1000	46
ER1010K	46
ER1041K	46
ER1050K	46
ER1060K	46
ER1080K	46
ER4011K	46
ER4040K	46
ER4050K	46
ER4060K	46
ER4080K	46
ER6010K	46
ER6040K	46
ER6050K	46
ER6060K	46
ER6080K	46
ER8010K	46
ER8040K	46
ER8050K	46
ER8061K	46
ER8080K	46
ET1810K	12/13
ET1860K	12/13
ET1880K	12/13
ET2010K	12/13
ET2060EMCKM	12/13
ET2060K	12/13
ET2080EMCKM	12/13
ET2080K	12/13
ET2211K	12/13
ET2260K	12/13
ET2280K	12/13
EV0002	25/26
EV0002	66
EV0003	25/26

CODE	PAG.
EV0003	66
EV0005	18
EV0006	25/26
EV0006	66
EV0007	54
EV0008	25/26
EV0008	66
EV0118	16/17
EV0120	16/17
EV0122	16/17
EV1004	66
EV1005	66
EV1006	66
EV1007	65
EV1030	12/13
EV1060K	20/21
EV1061K	20/21
EV1147	64
EV1148	64
EV1160	20/21
EV3500	56
EV5000	57
EX1860	32/33
EX1860	47/48/49
EX1880	32/33
EX1880	47/48/49
EX2060	32/33
EX2060	47/48/49
EX2080	32/33
EX2080	47/48/49
EX2260	32/33
EX2260	47/48/49
EX2280	32/33
EX2280	47/48/49
EZ1001	28/29
EZ1001	70
EZ1201	28/29
EZ1201	70
EZ1601	28/29
EZ1601	70
EZ4001	28/29
EZ4001	70
EZ6001	28/29
EZ6001	70
EZ8001	28/29
EZ8001	70

CODE	PAG.
GD1520	32/33
GD1530	32/33
PIRH0405	12/13
PIRH0455	12/13
PIRH1242	12/13
PIRH2432	12/13
TU1000	67
ZN0006	28/29
ZN0006	28/29
ZN0008	28/29
ZN0008	28/29
ZN0010	28/29
ZN1000	28/29
ZN1001	28/29
ZN1002	28/29
ZN1010	28/29
ZN1020	28/29
ZN1040	28/29
ZN1041	28/29
ZN1200	28/29
ZN3000	28/29
ZN4000	28/29
ZN4001	28/29
ZN4002	28/29
ZN5000	28/29
ZN5001	28/29
ZN5002	28/29
ZN6000	28/29
ZN6000	28/29
ZN6001	28/29
ZN6002	28/29
ZN8000	28/29
ZN8000	28/29
ZN8001	28/29
ZN8002	28/29
EZ1201	66
EZ1601	29
EZ1601	67
EZ4001	29
EZ4001	67
EZ6001	29
EZ6001	67
EZ8001	29
EZ8001	67
GD1520	32
GD1520	48

CODE	PAG.
GD1530	32
GD1530	48
PB0630	63
PB0803	63
PB1603	63
TU1000	67
ZN0010	28
ZN006	28
ZN008	28
ZN1000	28
ZN1001	28
ZN1002	28
ZN1010	28
ZN1020	28
ZN1040	28
ZN1041	29
ZN1200	28
ZN1600	28
ZN3000	28
ZN3011	28
ZN4000	28
ZN4001	28
ZN4002	28
ZN4011	28
ZN5000	28
ZN5001	28
ZN5002	28
ZN5011	28
ZN6000	28
ZN6001	28
ZN6002	28
ZN8000	28
ZN8001	28
ZN8002	28

Note

Note

ABB SACE
A division of ABB S.p.A.
Automation and Distribuition Boards
Via Italia, 58
23846 Garbagnate Monastero (LC) - Italy
Tel.: +39 031 3570 111
Fax: +39 031 3570228
www.abb.com

1STM604121R0006 - 12/15 - 5000

Member of CISQ Federation
RINA
ISO 9001 · ISO 14001
BS OHSAS 18001
Certified Integrated Systems
IQNet

Power and productivity
for a better world™