Technical Description

FBP FieldBusPlug

V6

Universal Motor Controller
UMC22-FBP
Software version 3.5

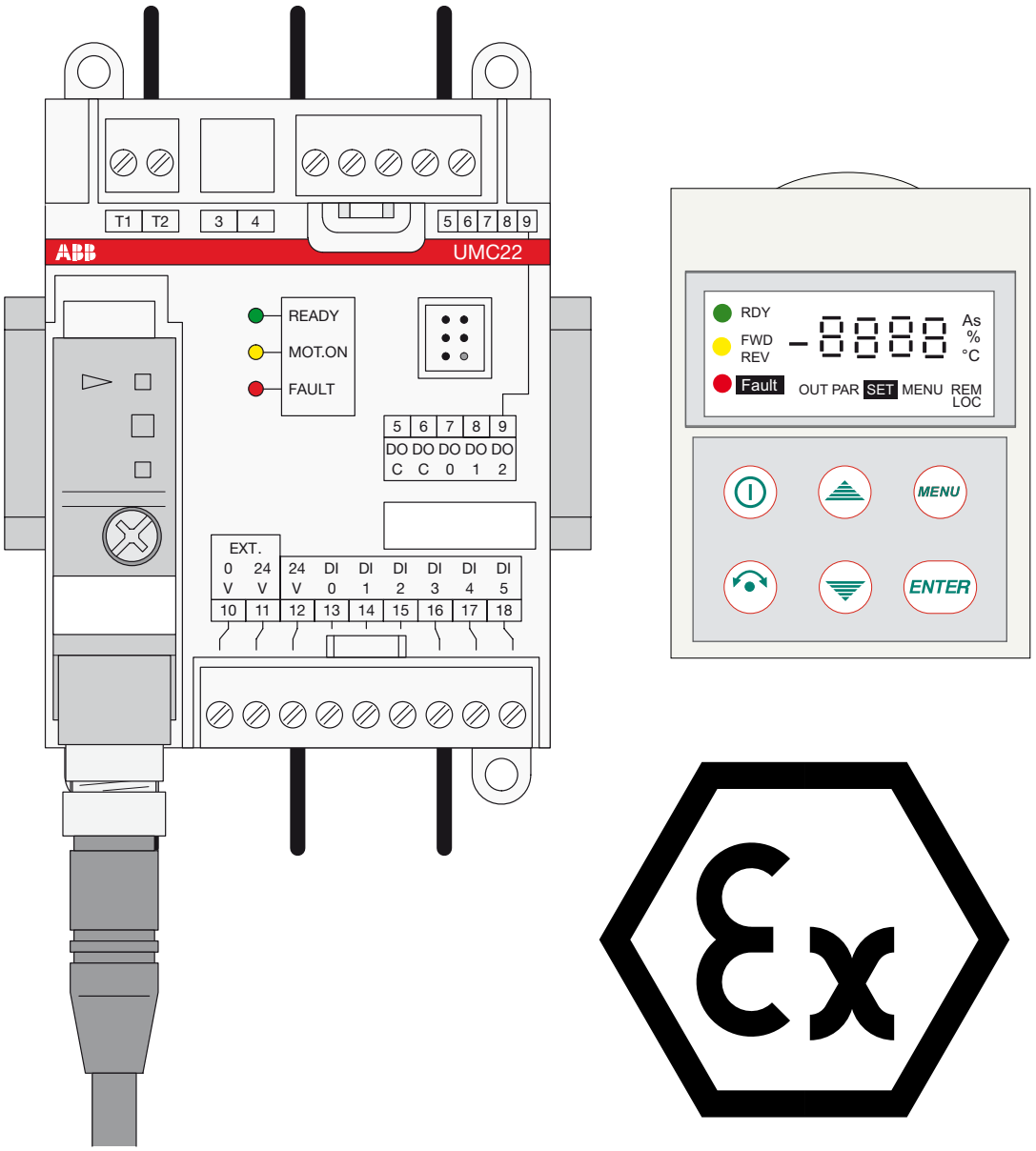

2CDC 342 016 F0008

Universal Motor Controller

For high-grade motor protection and control, current range 0.24 to 63 A, up to 850 A with external current transformers, with 6 digital inputs, 1 PTC input and 3 digital outputs, to connect to fieldbuses via FieldBusPlug or stand alone

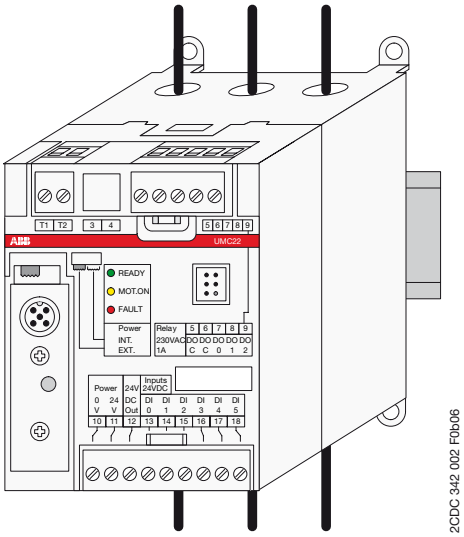

Fig.: Universal Motor Controller UMC22-FBP

Content

1. Introduction and features 5
1.1 How to use this document 5
1.2 Overview of the features 6
1.3 Construction 6
1.4 Overload protection 7
1.5 Other features 7
1.6 New features in comparison to preceeding versions 8
1.6.1 Software Version 3.2 → 3.5 8
1.6.2 Software Version 3.5.2 8
1.7 Compatibility 9
2. Device construction 10
2.1 Overview 10
2.2 Terminals, monitoring LEDs and operating elements on the front plate 11
3. Planning, commissioning and maintenance 12
3.1 Commissioning steps 12
3.1.1 Step 1: Wiring 12
3.1.2 Step 2: Interfacing to the fieldbus 12
3.1.3 Step 3: Commissioning for use of motors in potential explosive atmospheres Ex 13

3.2 Wiring 14
3.2.1 Wiring and internal 24 V / 0 V connections 14
3.2.2 Connection of contactors 15
3.2.3 Motor current = Set current versus wiring 17
3.2.4 External current transformer for higher currents 18
3.3 Interfacing to the fieldbus 19
3.3.1 Addressing 19
3.3.2 Address check 20
3.3.3 Parametrization as a fieldbus slave 21
3.4 Switch on and off motor 22
3.4.1 Regular start and stop 22
3.4.2 Stop via multi-function inputs 24
3.5 Earth fault detection via multi-function inputs 25
3.6 Motor protection with thermistor (PTC) acc. to EN 60947-8 (type A sensors) 27
3.7 Signalling 28
3.7.1 Infos available on the LEDs 28
3.7.2 Control Panel - Info and Password panel control 29
3.7.3 Control Panel - Direct panel control 30
3.7.4 Fault indication and warnings 31
3.8 Replace an UMC22 in case of faults 32
3.8.1 Replace an UMC22 in an operating installation 32
4 Commissioning for use of motors in potential explosive atmospheres (ATEX) Ex 33
4.1 General information for planning and commissioning 33
4.2 Certification 33
4.3 Commissioning Procedure - Setting parameters 34
4.3.1 Phase loss protection / PTC protection 34
4.3.2 Earth fault detection 34
4.3.3 Control Function 34
4.3.4 Set current 1, Set current 2 34
4.3.5 Trip Class 34
4.3.6 Cooling time 35
4.3.7 Phase loss protection 36
4.3.8 Check-back 36
4.3.9 Automatic fault reset 36
4.3.10 Bus Fault Reaction 36
4.4 Protection against unauthorized access 36
4.5 Self Tests 37
4.6 Fault behaviour 37
5. Data structure 38
5.1 Device configuration 38

5.2 Bus data - Monitoring, command, diagnosis 39
5.2.1 Monitoring, command and diagnosis data - Overview 39
5.2.2 Monitoring data - Details 41
5.2.3 Commands - Details 42
5.2.4 Diagnosis - Details 43
5.3 Parameters 46
5.3.1 Parameter groups 46
5.3.2 Single Parameter Transfer 48
5.3.3 Transfer of the complete parameter set in one block 50
5.3.4 Parameter - Details in alphabetical order 52
6. Technical data 70
6.1 Main power lines 70
6.2 Controller unit 72
6.3 Digital inputs 73
6.4 Digital outputs 73
6.5 Thermistor motor protection (PTC - binary) 74
6.6 FieldBusPlug connection 74
6.7 Environmental and mechanical data 74
6.8 Dimensions 75
7. Ordering data 76
8. Control functions 78
8.1 Transparent 79
8.2 Overload relay 82
8.3 Direct starter 86
8.4 Reversing starter 93
8.5 Star-delta starter 1 101
8.6 Star-delta starter 2 109
8.7 Pole-changing starter 1 117
8.8 Actuator 1, 2, 3 and 4 127
9. Control Panel - Overview and menu 135
9.1 Overview - Control Panel UMC-PAN 136
9.1.1 Menu levels 136
9.1.2 Buttons on the Control Panel 137
9.1.3 Direct panel control 138
9.1.4 Comparison Password panel control and Direct panel control 140
9.2. Menu levels 141
9.2.1 Monitoring 141
9.2.2 Edit 1 147
9.2.3 Edit 2 151
10. Control Panel - Overview and menu 161

Notation of page references: Chapter~Page of chapter
Example: 5.3.4~1 means first page of chapter 5.3.4

1. Introduction and features

1.1 How to use this document

▶ A particular motor feeder shall be planned and realized:

Select the dedicated part in this document (examples):

▷ *Direct starter* see chapter 8.3.3

▷ *Reversing starter* see chapter 8.3.4

▷ or others
(the chapter number in the header of the pages - third line - shall make it easy to find)

The subchapters of chapter 8. which includes all starter types start with a circuit diagram for the basic configuration. On top of the circuit diagram the parameters are named that must be changed, with numbers of the chapters. *Direct starter* is one selection example of the parameter *Control function*. All other parameters that are not named here can be kept as default values.

▶ The motor feeder shall get additional functions:

The next circuit diagram in chapter 8 shows an example of a circuit diagram with additional functions. These functions can be selected with parameters named on top of the diagrams.

To find out which other functions can be parameterized it is recommended to study the parameter list see chapter 5.3.1, particularly the parameters *Local control* and *DI0, DI1, DI2 Multi-function input* see chapters 5.3.4. An examle for the parameterization of the parameter(s) *DI0, DI1, DI2 Multi-function input* is shown in chapter 3.4.2.

▶ Find out which steps during planning and commissioning are necessary:

▷ Chapter 3.1 ff. also gives more detailed hints e.g. chapter 3.2.1, chapter 3.2.2, chapter 3.2.4, etc.

▷ The way to integrate the UMC22 into the different types of control systems / DCS is, unfortunately, not uniform.
Chapter 3.3.3 gives hints based on the AC31 CPU 07KT98 that can help to understand.
The integration into higher sophisticated control systems is supported by additional medias e.g. Device Type Manager (DTM) and others. Please ask for appropriate documentation.

▷ The motor can be started and stopped on different ways see chapter 3.4.1.

▷ Signalling on the UMC22 see chapter 3.7.1, on the Panel see chapter 3.7.2 and 9., in the telegram see chapters 5.2.1

▷ Use of the Control Panel, introduction, particular the two modes see chapter 3.7.2, details see chapter 9.

▷ If any fault appears see chapter 3.7.4, particular for the Control Panel see chapter 9.2.
Remark: The diagnosis telegram shown in the motor feeder chapters, e.g. chapter 8.3.3, shows also the info displayed by the Control Panel. Example: F003 = Communication fault.

▶ Build a bus configuration:

Consult the appropriate FBP document, e.g. PDP22 (PROFIBUS)... .
Bus configurations with FBP devices only are easy to realize with low possibilities to make a fault.
Configurations with mixed FBP devices and others need more attentiveness.

▶ A fault appears:

Consult chapter 3.7.4, as a first overview the table shows the info in the diagnosis telegram and on the Control Panel.

1.2 Overview of the features

- The Universal Motor Controller UMC22 provides high-grade motor protection and control for the current range 0.24 up to 63 A with one type.
  For higher currents up to 850 A additional protection current transformers are available.
- With the integrated FieldBusPlug interface the UMC22 can be connected to different fieldbuses using the appropriate type of FieldBusPlug.
  But stand-alone operation - without FieldBusPlug - is just as good possible.
- 6 digital inputs and 3 relay outputs offer to realize a wide range of predefined control functions (5.3.4) and applications such as "Direct start" (8.3.), "Star-delta start" (8.5.1), "Actuator" (8.8.1) including Local operation via digital inputs (e.g. 5.3.4 and 8.3.2) and others as selected by parameters.
- 3 of the 6 inputs - multi-function inputs - can be parametrized for particular functions such as fault input with or without delay (3.4.3 and 5.3.4).
  DI2 Multifunction input can be also parameterized as earth fault input (3.5).
- Via a PTC input the UMC22 can be connected to PTC sensors (3.6).
- The status of the digital inputs, detailed diagnosis information and the parameters are accessible via the fieldbus (supposed the fieldbus offers the appropiate features) (5.2.1).
- LEDs on the UMC22 monitor "Ready", "Motor On" or "Fault" (3.7.1).
- Additional the Control Panel UMC-PAN (separate delivery) offers similar access to all important information. The Control Panel is necessary to set the fieldbus slave address and can be snapped up the front of the UMC22 (9.).
- Also the overload protection behaviour and other functions can be changed by parameters in a wide range (5.3.1).
- The control function *Overload* is dedicated to use the UMC22 like an overload relay with or without fieldbus connection (8.2.1). The other control functions can be used stand alone also.
- The UMC22-FBP (1SAJ 510 000 R0500) software version 3.5 has ATEX approval. It is prepared to protect motors in potential explosive atmospheres (4)..

Remarks for the use of UMC22-FBP in potential explosive atmospheres:
The use of the UMC22-FBP in these applications needs a self test via Control Panel in regular time intervals, max. 3 years, and during maintenance.
Additional the change of parameters via control system and via Control Panel can be blocked locallywith the menu point Parameter lock. This is mandatory for the use of motors in potential explosive atmospheres.

1.3 Construction

- The UMC22-FBP consists of two separate parts:
  current transformer unit and controller unit, mounted as one device (2.1).
- Mounting on DIN rail or with screws. W x H x D = 70 x 105 x 110 mm.
- Protection degree IP20.
- Current-carrying motor lines are lead through the current transformer set.
- For higher currents current transformers can be mounted remote from the UMC22 up to the current carrying motor line length of 2 m (3.2.4).

1.4 Overload protection

- Measuring the motor current. The value is displayed on the Control Panel (9.1.3) and provided also to be sent to the fieldbus) (5.2.1).
- Electronic overload protection for nominal currents of 0.24 A to 63 A (whole range with only one UMC22 type). *Set currents* selectable with parameter via fieldbus (5.3.4) or Control Panel (9.2.2).
- *Trip classes 5*, *10*, *20* and *30* (selectable with parameter) (5.3.4)
- Phase-loss protection (5.3.4)
- Short circuit protection of the motor lines by external fuses or circuit breakers on the line side.
- Blocking protection configurable
- Warn limits for lower and upper current threshold adjustable

1.5 Other features

- With parameter *Bus fault reaction* it can be selected between *Relays off* or *Outputs retain status* in case of automation system or fieldbus failure (5.3.4).
- Diagnostic informations available via LEDs (3.7.1), fieldbus (5.2.1) and Control Panel (9.2.1).
- Preventive diagnostic functions (5.3.1) (e.g. number of starts (5.3.4)).
- Function blocks or similar software tools to implement into the program of the automation system.

NEW

1.6 New features in comparison to preceeding versions

1.6.1 Software Version 3.2 → 3.5

▶ Multi-function inputs (5.3.4)
The Multi-function inputs DI0, DI1 and DI2 offer additional possibilities to survey the motor and the production process it is used for.
Via the parameters *DI0 Multi-function input*, *DI1 Multi-function input* and *DI2 Multi-function input* the inputs DI0, DI1 and DI2 can be parameterized as Multi-function inputs.

Remark:
Multi-function input DI2 replaces - keeping the compatibility - the former parameter Fault input (DI2).

▶ Control Panel functions and handling

▷ The Control Panel offers the simplified operation *Direct panel control* (9.1.3) (if parametrized).

- When switched on, the menu to start and stop the motor appears immediately.
  Dedicated buttons allow to start and stop the motor.
- If any fault appears the menu changes immediately to the fault menu.
  With the ENTER button the fault is monitored and can be acknowledged.
- For commissioning it is still possible to go to other menu points e.g. *Set current* as in former versions.

  Direct panel control can be released / blocked via Command telegram of the control station.

▷ The actual motor current can be displayed on the Control Panel also as absolute value.
Select with cursor buttons on the Control Panel (9.1.3).

▶ New control functions *Actuator 1 to 4*:
The Control functions *Actuator 1 to 4* allow to control actuators with different configurations of limit and torque switches (8.8.1). The *Start surveying time* is a parameter (*Star-delta starting time*) can be extended (5.3.4).

▶ New control function *Star-delta starter 2*:
Control function *Star-delta starter 2* (8.7) can be set via Parameter 12 (*Control function* = *Star-delta starter 2*). In opposite to *Star-delta starter 1* the number of operating cycles is the same for all contactors using this control function.

▶ Fault output with flashing function:
The fault output can be set into flashing mode with parameter 24 (*Fault output*) (5.3.4).

▶ Advanced diagnosis functions:
External faults at the digital inputs DI0, DI1 and DI2 can be differentiated (via fieldbus: diagnosis Byte 3 Bits 4-6 / via Control Panel: fault number F022, F023 and F024).

1.6.2 Software Version 3.5.2

▶ In this version the yellow LED on the UMC-PAN not only lights if the Motor was started via the UMC-PAN but also if the start command came from a digital input or via fieldbus.

▶ Additionally the flashing frequency of the red error LED was reduced for better perceptibility.

See chapter 3.7.2 for further explanations on how to use the UMC-PAN.

1.7 Compatibility

UMC22 versions 3.2 und 3.5

Remark: - ATEX:

UMC22 V3.50 (1SAJ 510 000 R0500) is an ATEX certificied device. It can only be replaced by UMC22 Version 3.5 (1SAJ 510 000 R0500).

In principle UMC22 is downwards compatible, this means a UMC22 version 3.5 can be used instead of an UMC22 version 3.2 version in an existing installation.

Recommandation:
It is recommended not to replace the configuring (GSD or EDS) file by a newer version.

Reason:
Some programming tools / control builders for PLC / DCS have a problem:
When the configuring file (GSD / EDS file) is replaced all slaves that are configured with this file need to be configured again.

In doubt check with a separate small test program before replacing the old GSD / EDS file.
In this case the UMC22 works exactly like the replaced old UMC22 but does not offer the newer functions.

If the new functions of the UMC22 V3.5 are needed, the GSD module respectively the EDS file for UMC22 V3.4 must be used.

UMC22 Version 3.5.2

The version 3.5.2 is backwards compatible to the version 3.5.1

2. Device construction

2.1 Overview

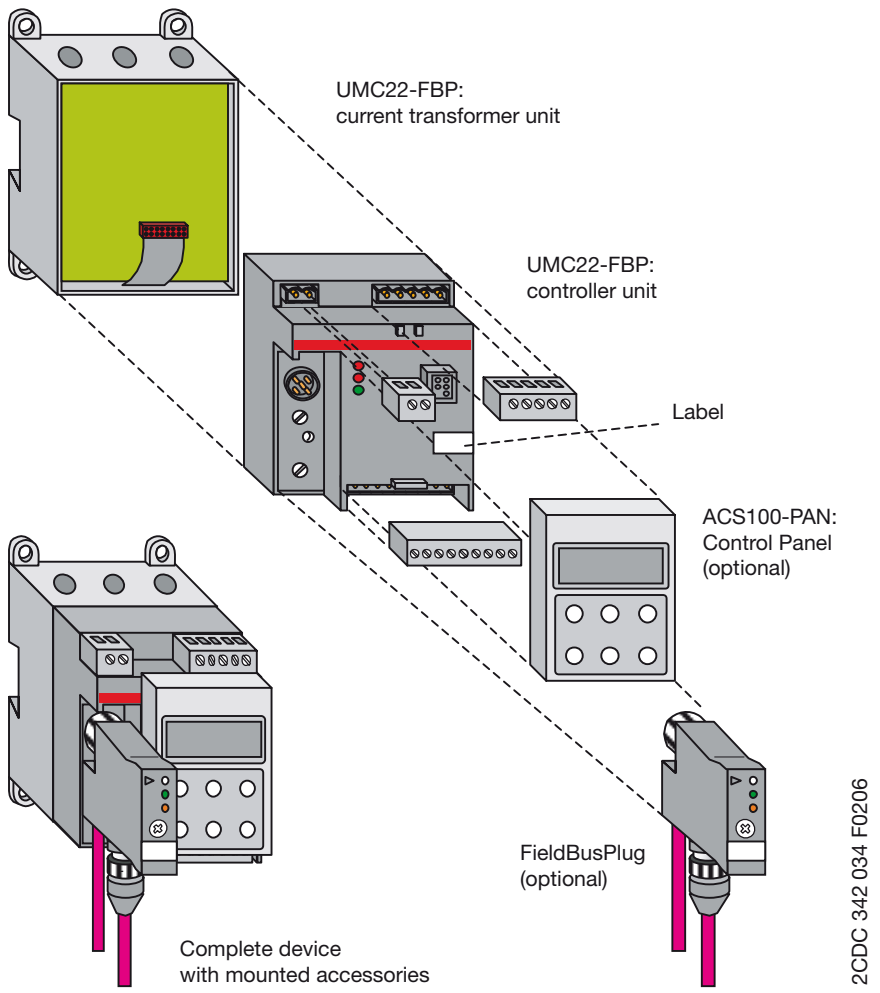

Fig. 2-1: Construction of the UMC22-FBP

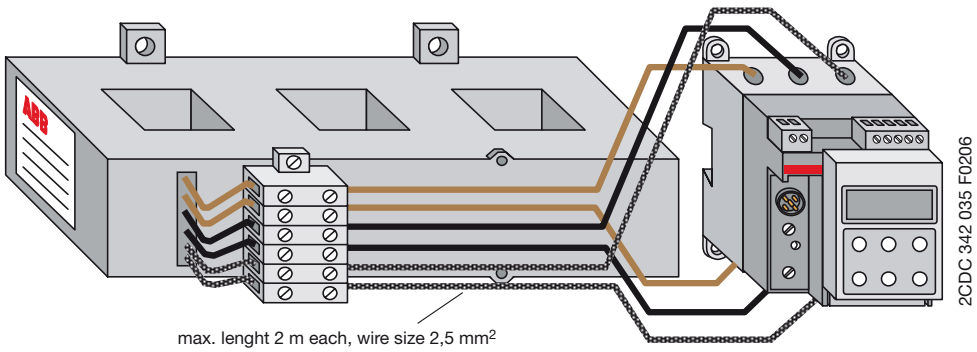

Fig. 2-2: UMC22-FBP with external current transformer for higher currents

2.2 Terminals, monitoring LEDs and operating elements on the front plate

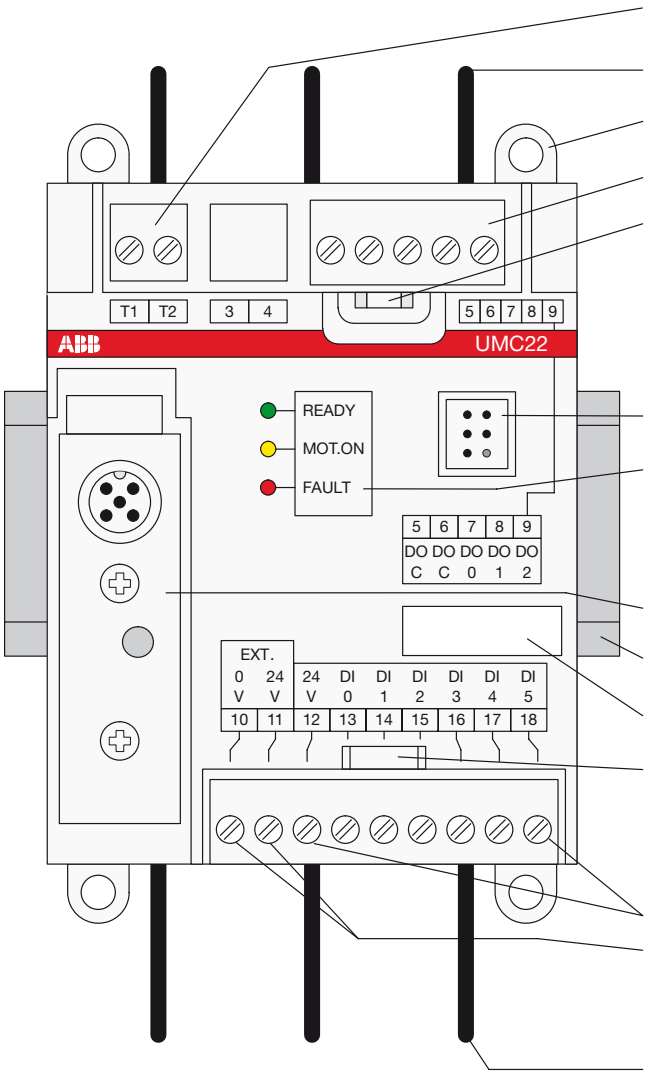

Connecting terminals for PTC sensors

Current path (for measuring the motor current)

Mounting by 4 screws M4

Connecting terminals for the digital outputs

Pawl to snap up the Control Panel

Switch for selecting the internal electronics supply voltage:

left position: external supply (via terminals 10/11)
right position: supply via FieldBusPlug

Plug connection for the Control Panel

LEDs:

green	READY	(for operation)
yellow	MOT.ON	(motor on)
red	FAULT	(overload, failure)

Connector for the FieldBusPlug

DIN rail

Front label, e.g. for slave address

Control Panel holder. Insert the Control Panel at this holder then snap it into the pawl on the upper side. The electrical contacts are automatically connected.

Connecting terminals for the digital inputs

Connecting terminals for the external supply voltage (supply for internal electronics)

Current path (for measuring the motor current)

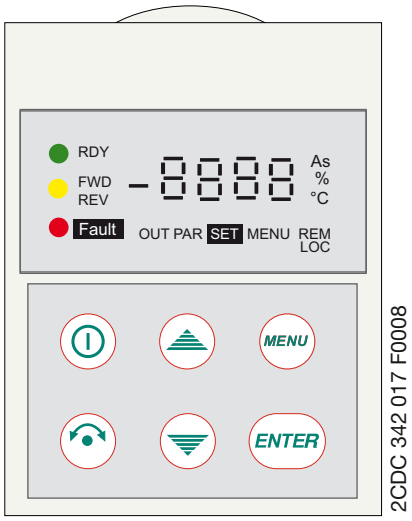

Snap-mountable Control Panel UMC-PAN for monitoring and control / adjust:

- slave address
- control function
- overload parameters
- on-site diagnosis
- etc.

The Control Panel UMC-PAN is not shipped together with the UMC22-FBP. It must be ordered separately.

Fig. 2-3: Terminals, monitoring and operating elements of the UMC22-FBP

Dimensions see chapter 6.8.

3. Planning, commissioning and maintenance

3.1 Commissioning steps

3.1.1 Step 1: Wiring

Wiring and internal 24 V / 0 V connections (3.2.1)

Hard-wire with switch apparatus and other components acc. to the application requirements.
Wiring examples see chapter 8.
Use external supply (SWITCH to EXT) if components are distant to the UMC22.

Connection of contactors (3.2.2)

Use spark suppression, for larger contactors also interface relays to keep good lifetime of the UMC22 internal relays.

Motor current = Set current versus wiring (3.2.3)

Attention!

Have a look at the wiring of the motor to fix the correct *Set current* for perfect motor protection.

Example:
For √3 (inner delta) wiring the parameter *Current factor* can be changed to 1.73 to get displayed the real *Set currents* on the Control Panel and in the control system.

Operation details for motors with small set currents (<1A)!

Using a UMC22 in an environment with very strong magnetic fields and a small set current at the same time the current measurement can deviate a few percent from the real current. Therefore the displayed motor current is too high and an overload trip occurs too early.

Very strong magnetic fields can be originated from a contactor directly mounted beside the UMC22, closely passing current links or stray fields caused by large transformers. When observing the effect the distance between the UMC22 and the contactor shall be increased to about 5 cm or the UMC22 shall be rotated by 90 degrees.

External current transformer for higher currents (3.2.4)

Connect external current transformers for higher currents. Current factor see above.

3.1.2 Step 2: Interfacing to the fieldbus

Addressing (3.3.1)

The UMC22 is provied with a fieldbus neutral interface. Use an appropriate FieldBusPlug to connect it to the fieldbus.

The slave address can be adjusted by
- using the Control Panel or
- using the Addressing-Set CAS21-FBP.

The bus master is normally defined by the control system.

3.1.2 Step 2: Interfacing to the fieldbus (continued)

Parametrization as a fieldbus slave (3.3.3)

Situation: The control systems, programming tools and the fieldbus types are totally different.

This means: There is no common rule to configure the fieldbus master and to bind in FieldBusPlug slaves into the application program.

Procedure:
Load the actual slave configuration file into the programming tool of the bus master in the control system. Examples:
ABB_082D.GSD for PROFIBUS DP-V1
ABB_UMC22.EDS for DeviceNet.

Create fieldbus configuration together with the application program in the control system.

For some control systems dedicated function blocks or example programs are available.

Depending on the control system and the fieldbus type the ordering of the I/O signals can be made automatically, otherwise "manual" ordering is necessary.

Depending on the control system and the fieldbus type there are different possibilities to change parameters:
- during configuring or
- as a part of the control system program or
- with the Control Panel UMC-PAN. As a special feature the Control Panel allows to read out the complete parameter set of an UMC22 and to transfer it to another UMC22 (9.2.3).

Depending on the parameter the set parameter values are taken over at different instants, e.g after switching off and on the UMC22 or the motor (5.3.2).

If a UMC22 is set into operation again after power off, it will start with the parameter values last stored.

3.1.3 Step 3: Commissioning for use of motors in potential explosive atmospheres Ex

In this field of application - after setting the parameters carefully - the parameter *Parameter lock* has to be set on the Control Panel ton ’P.loc’ to hinder hazardous changes of parameters via control system or via Control Panel. See alos chapter 4.

Further info

Switch on and off motor (3.4)

Signalling (3.7)

Info available on the LEDs (3.7.1)
Control Panel, Info and Local control (password protected) (9.1.1 ff.)

3.2 Wiring

3.2.1 Wiring and internal 24 V / 0 V connections

Hard-wire with switch apparatus and other components referring the application requirements. Wiring examples see below and chapter 8.

Example: Direct starter

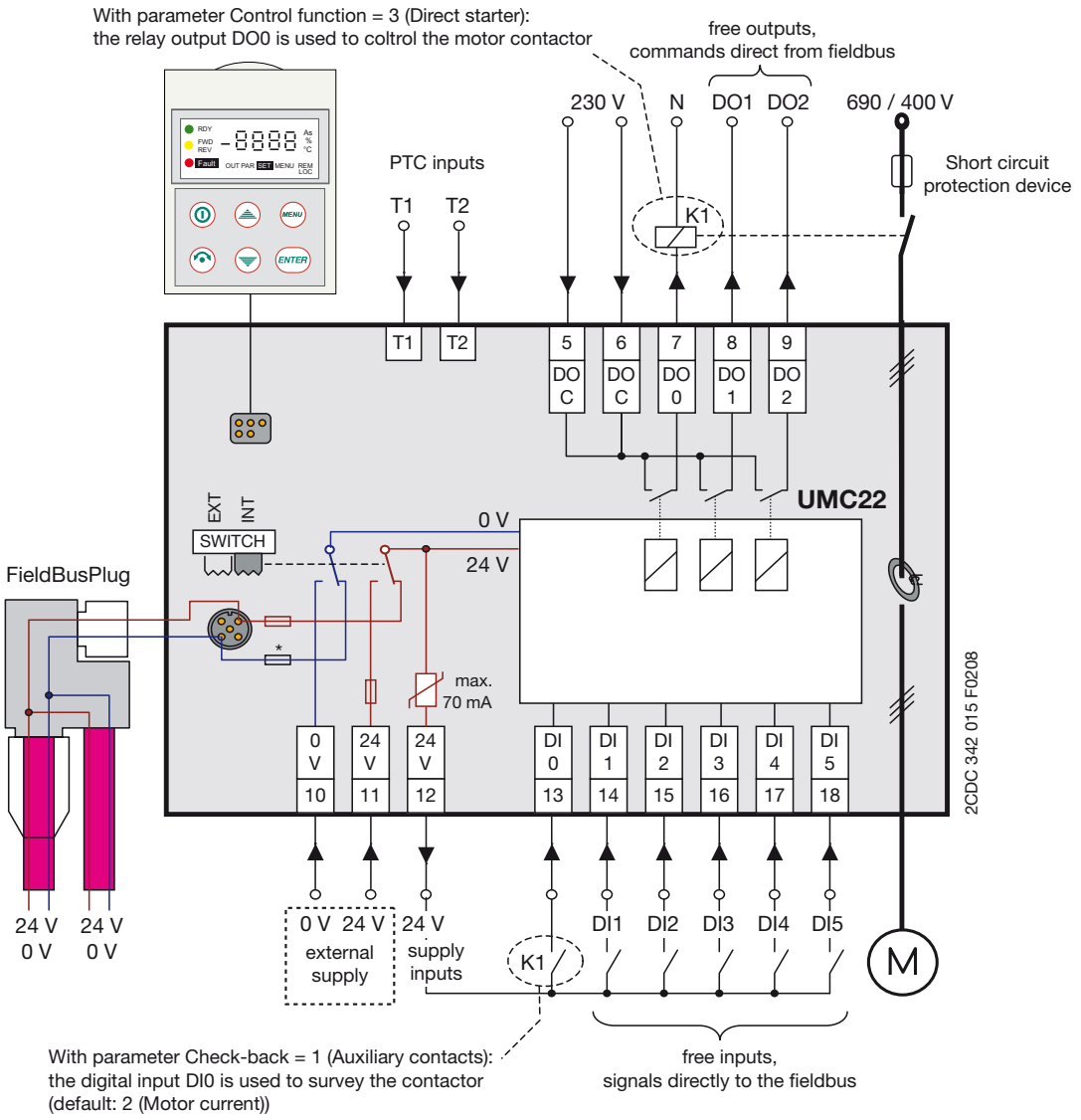

Fig. 3-1: UMC22-FBP as Direct starter (example)

Remark:

Normally the inputs and the internal electronic circuits are supplied locally via the terminals 10 and 11. In this case the SWITCH must be set to EXT. The connection of distant contacts or sensors require this kind of supply.

If contacts next to the UMC22 are used only - that means the 24 V wiring can be surveyed easily - the supply via the fieldbus and the FieldBusPlug is possible (SWITCH to INT).

3.2.2 Connection of contactors

Use spark suppression, for larger contactors also interface relays to keep good lifetime of the UMC22 internal relays.

Actual ABB contactors - all currents for 230 V AC (Extract)

Contactor type	Inrush current [A]	Holding current [A]	Inrush power [VA]	Holding power [VA]	VDR for spark suppression (ABB type)	Lifetime UMC22 relays [Switching cycle]
B6S-30-10-2.8 [1]	0.01	0.01	2.4	2.4	-	500˙000
A9, A12, A16	0.30	0.03	70	8	RV5/250	500˙000 [2]
A26, A30, A40	0.52	0.05	120	12	RV5/250	400˙000 [2]
A50, A63, A75 [3], [5]	0.78	0.08	120	12	RV5/250	300˙000 [2]
A95, A110 [5]	1.52	0.10	180	18	RV5/250	use interface relay
A145, A185 [5]	2.39	0.15	550	35	RC5-2	use interfacerelais
AF210, AF260, AF300 [4]	2.04	0.04	470	10	-	500˙000
AF400, AF460, AF580, AF750 [4]	3.8	0.05	890	12	-	500˙000

[1] The contactor B6S-30-10-2.8 (24 V DC) is recommended as interface contactor due to its internal spark suppression.

[2] All values only for contactors with spark suppression, see appropriate column. Use interface contactor if higher lifetime is required.

[3] Interface contactor is recommended (e.g. B6S-30-10-2.8).

[4] The contactors for higher currents are available with electronic interface only

[5] Also available with electronic interface (AF50 to AF185).

Remark:
Spark suppression is necessary for all types except the AF types to keep resonable lifetime.

Interfacing larger contactors with electronic interface (AF types)

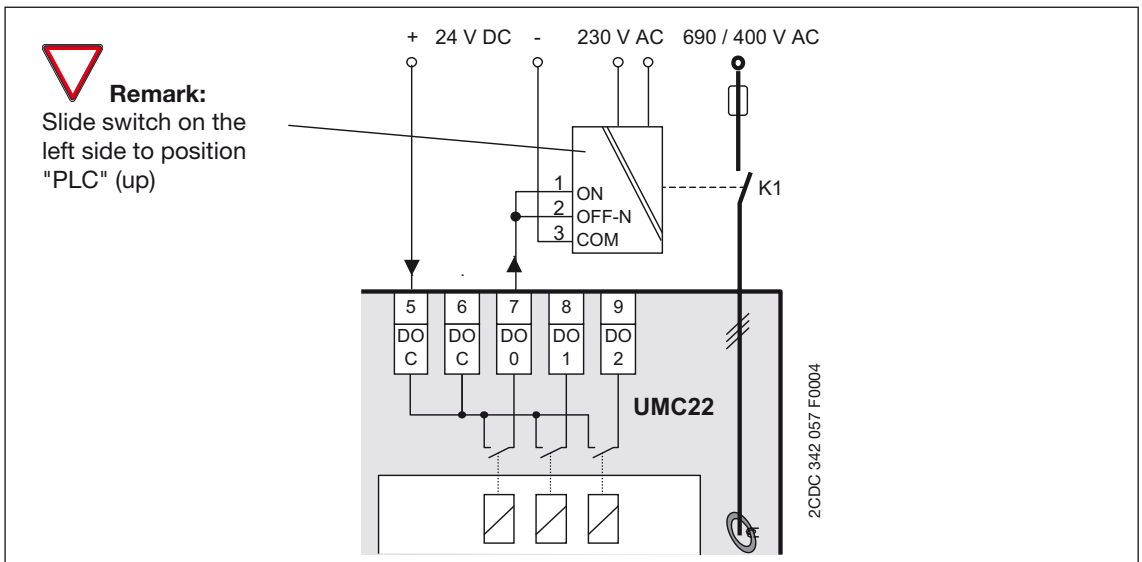

Fig. 3-2: Connection of contactors with electronic interface (AF types) to the UMC22

3.2.2 Connection of contactors (continued)

Interfacing contactors with peak current > 0,5 A: Types A50 and larger

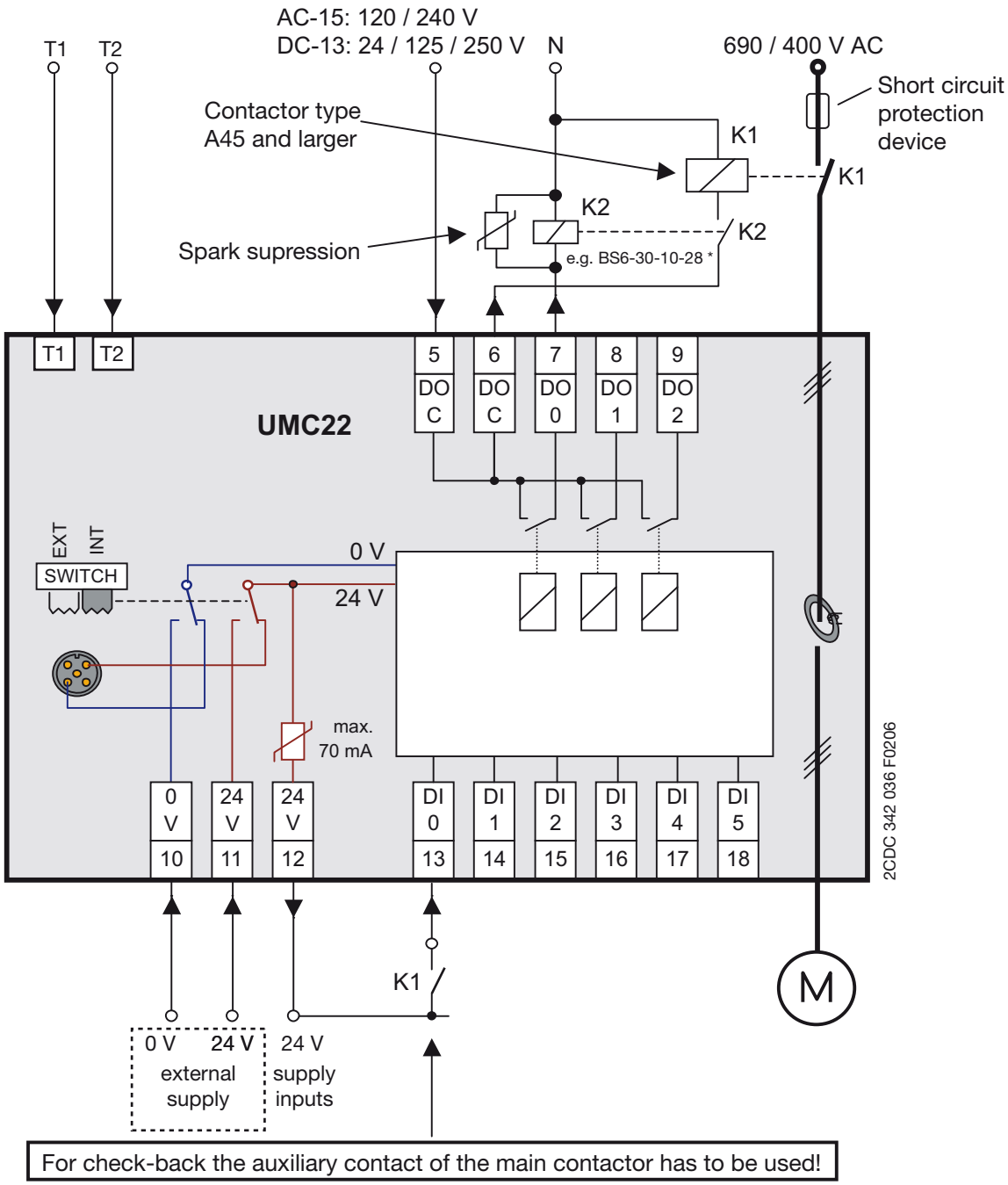

Fig. 3-3: Connection of contactors with peak currents > 0.5 A (ABB types A50 and larger) to the UMC22-FBP

* This contactor has build in spark supression.

3.2.3 Motor current = Set current versus wiring

Attention!

Have a look at the wiring of the motor to fix the correct Set current for perfect motor protection.

Example:
For √3 (inner delta) wiring the parameter *Current factor* can be changed to 1.73 to get displayed the real *Set currents* on the Control Panel and in the control system. The Delta √3 circuitry is normally used for larger motors to reduce the current transformer size.

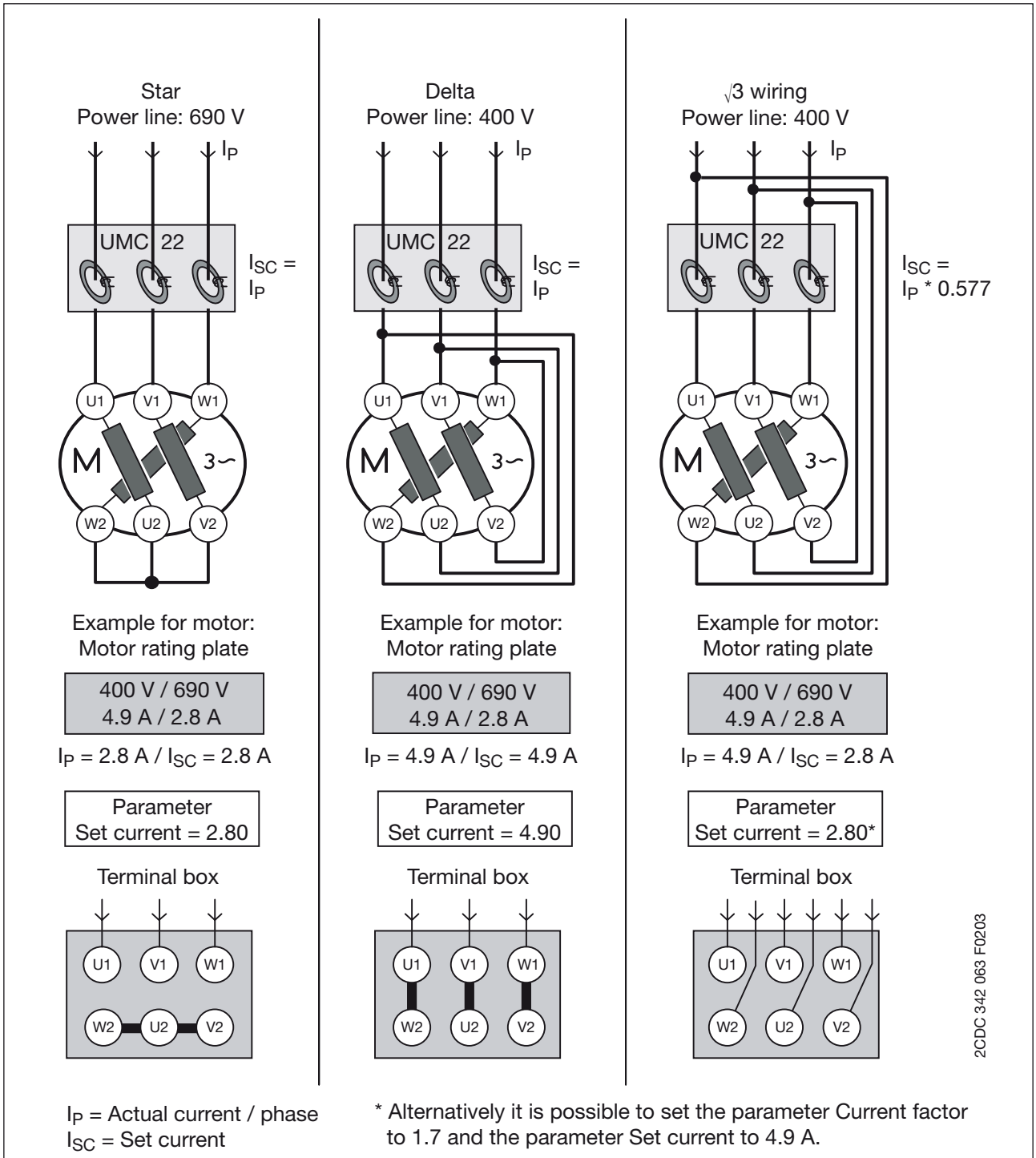

I_P = Actual current / phase
I_{SC} = Set current

* Alternatively it is possible to set the parameter Current factor to 1.7 and the parameter Set current to 4.9 A.

Fig. 3-4: Motor current = Set current versus wiring

3.2.4 External current transformer for higher currents

All types of protection current transformers class 5P10 (Standard EN/IEC60044) can be used.

The selection should be made based on the requirements:

- ▶ Secondary current (= current in the UMC22) range about 5 A (recommended CTs have 4 A),
- ▶ Through-hole area if single strands are used,
- ▶ Max. burden 60 mΩ (UMC22: 30 mΩ, conductor: wire size 2.5 mm², length 2 m each: 30 mΩ)
- ▶ Requirements for current transformers referring IEC60044-1 table 11 and 14:

Measuring current transformer class 1					Protection c.t. class 5P10	
actual / nominal current	5 %	20 %	100 %	120 %	100 %	1000 %
max. inaccuracy	3	1.5	1	1	1	5

These values must be guaranteed by the current transformer supplier. The inaccuracy is added to the inaccuracy of the UMC22.

The pass-through sense of the strands does not affect the operation.

For currents up to 850 A space saving combinations are recommended.

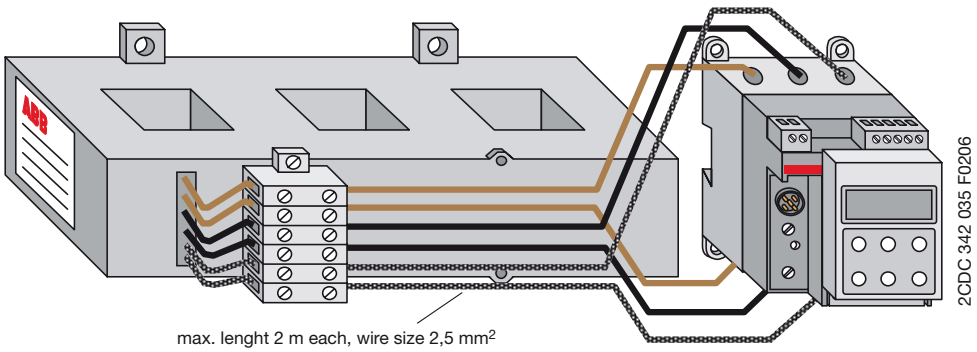

Fig. 3-5: UMC22-FBP with external current transformer for higher currents

Type / Korc type	Recommended current range [A]		Current factor (Default = 1.0)		Secon-dary current range [A]	Hole area WxH [mm²]	Max. wire size [mm²]	Link kit (bar) type → for contactor (Order code see chapter 7.)
	Star, Delta	√3 wiring	Star, Delta	√3 wiring				
UMC22 stand alone	0.24-63	0.42-109	1	1.7	-	11 ∅	16	-
4L185 R/4	60-185	104-320	46.2	80.1	1.3-4	22x28	2x70² [1)]	DT450/A185 → AF145, AF185
4L310 R/4	180-310	312-537	77.5	134.2	2.3-4	22x28	2x70² [1)]	DT450/A300 → AF210-AF300
5L500 R/4	300-500	520-866	125	216.5	2.4.4	41x22	3x70² [1)]	DT500AF460L [2)] → AF400, AF460
5L850 R/4	500-850	850-1472	212.5	368.1	2.4-4	41x22	-	DT800AF750L [2)] → AF580, AF750

[1)] Wire size has to be fixed acc. to IEC/EN 60204 [2)] Link kits for Star-delta starter (others s. catalogue)

Remark:
If current transformers of other suppliers are used the table above may serve as a calculation basis for the *Current factor*. Example: Type 5L500 R/4 means: Primary 500 A, secondary 4 A, current factor 125.

3.3 Interfacing to the fieldbus

3.3.1 Addressing

To enable control of a motor by sending data to and receiving from a control system, the UMC22 is provided with a fieldbus neutral interface.

The fieldbus protocol is defined by selecting the appropriate FieldBusPlug type (PROFIBUS DP, DeviceNet, MODBUS, ...).

Consult e.g. the document PDP22 (PROFIBUS).

A slave address must be given to the FieldBusPlug in order to communicate with a bus master of the control system. The adjustment of the slave address is possible for all fieldbuses.

Normally the slave address is set by the Control Panel, that means the slave address is directly adjusted and stored in the UMC22.
Immediately when mounted or when the combination is switched on, the address is monitored. The address can be changed by menu point Change address (9.2.2 and 5.3.4).

An other way to adjust the address in the FieldBusPlug is to use the „Addressing Set“ CAS21-FBP.0 (Interface unit + PC with addressing SW). See appropiate description.

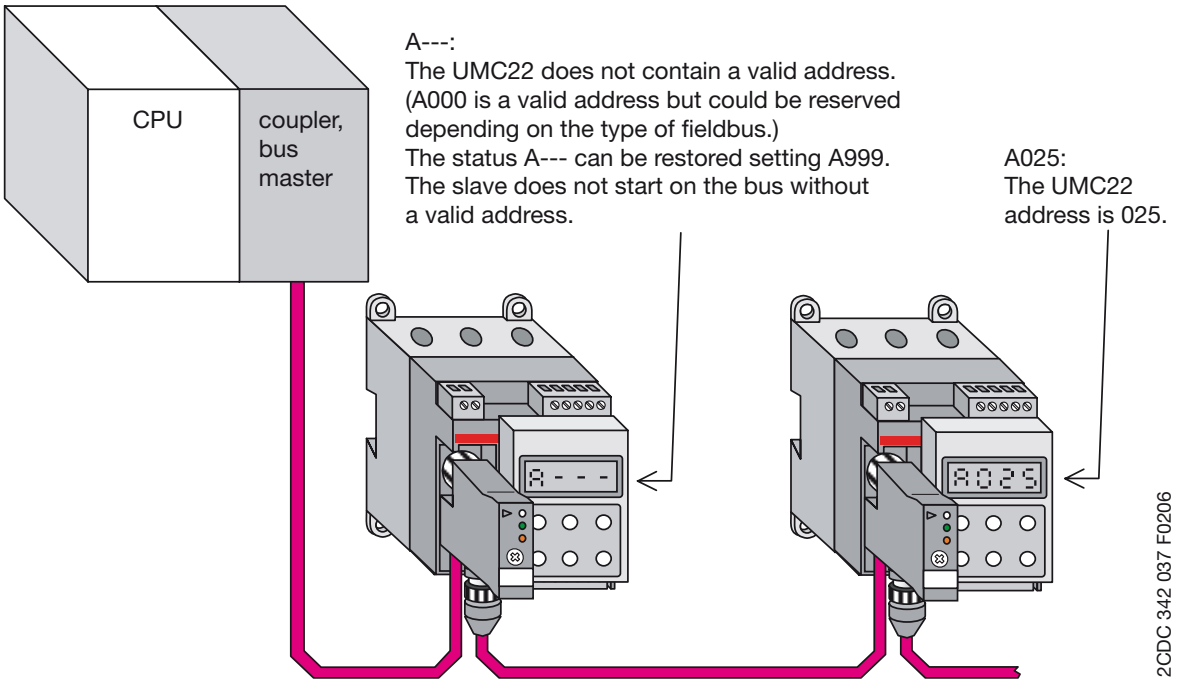

Fig. 3-6: UMC22-FBP address monitored on the Control Panel

3.3.2 Address check

The parameter *Address check* is dedicated to be used particularily for drawer systems. If activated it detects when - per hazard - drawers are exchanged and wrong drawers are inserted.
This chapters describes the addressing in general and the function if *Address check* is activated.

When switching on the combination UMC22-FBP ◀▶ FieldBusPlug 5 cases are possible:

Case 1:

Neither the UMC22-FBP nor the FieldBusPlug contains a valid address:
→ The UMC22-FBP does not start to operate and to communicate.

Case 2:

Only the UMC22-FBP contains a valid address:
→ The FieldBusPlug gets the address and saves it. Operation and communication starts.

Case 3:

Only the FieldBusPlug contains a valid address:
→ The UMC22-FBP gets the address and saves it. Operation and communication starts.

Case 4:

The UMC22-FBP and the FieldBusPlug contain the same address:
→ Operation and communication starts.

Case 5:

The UMC22-FBP and the FieldBusPlug contain different addresses:
The behaviour of the UMC22-FBP depends on the setting of the parameter *Address check*.

Case 5a:
Address check = Off (= 0) (default):
→ The FieldBusPlug stores the address received from the UMC22.
Operation and communication starts.

Case 5b:
Address check = On (= 1). Mainly used for Draw-out design.
→ Neither the operation nor the communication starts.
→ The Control Panel monitors alternating (3 seconds each):

Address of the UMC22-FBP A012
Address of the FieldBusPlug P017

→ Fault (F021) is set.
→ With the Control Panel the menu Change address has to be selected and the desired address must be adjusted (9.).
→ After leaving this menu operation and communication starts immediately.
Both the FieldBusPlug and the UMC22-FBP store the adjusted address.

Remark:
If the adjusted FieldBusPlug address is not configured in the fieldbus master the communication does not start and the red LED on the FieldBusPlug monitors Fault.

3.3.3 Parametrization as a fieldbus slave

Control systems, programming tools and the fieldbus types are totally different.

This means: **There is no common rule to configure the fieldbus master and to bind in FieldBusPlug slaves into the application program.**

Parametrization example:
UMC22-FBP connected to an ABB CPU type 07KT98 via PROFIBUS DP-V1 Plug PDP22-FBP:

The appropriate configuration file is: ABB_082D.GSD. This file must be stored in the subdirectory .... AC1131\Library\PLCConf.

The configuration file contains the data for all available devices on the date of origin.
This means: For the PROFIBUS DP-V1 FieldBusPlug a list is offered during configuration with all devices that can be selected.

Other Programming Tools offer a menu point to read the .GSD configuration file, or may request separate configuration files for different devices.

With the definition of the Byte addresses the addresses of the bits and words are automatically defined:

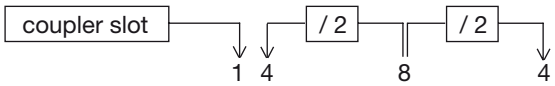

Telegram data	Word (W)	Byte (B)	Bits (x)	Data bits 7...0
Input to PLC (Monitor)	%IW1.4	%IB1.8 %IB1.9	%IX1.4.0 ... 1.4.7 %IX1.4.8 ... 1.4.15	WARNING ... RUN REVERSE DI5 ... not used
	%IW1.5	%IB1.10 %IB1.11	%IX1.5.0 ... 1.5.7 %IX1.5.8 ... 1.5.15	Motor current, High Byte Motor current, Low Byte
Output from PLC (Com-mands)	%QW1.8	%QB1.16 %QB1.17	%QX1.8.0 ... 1.8.7 %QX1.8.8 ... 1.8.15	WARNING ... RUN REVERSE D=2 ... not used
	%QW1.9	%QB1.18 %QB1.19	%QX1.9.0 ... 1.9.7 %QX1.9.8 ... 1.9.15	... not used ... not used

The configuring tool of the 07KT98 CPU used for PROFIBUS DP-V1 also offers the list of the parameters that can be changed:

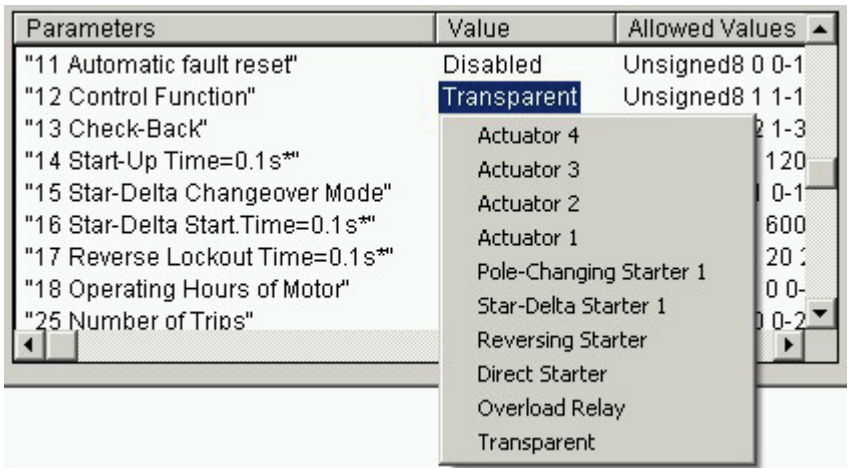

Other control systems offer a more or less similar list.

For more info consult the appropriate FieldBusPlug and/or control system description.

3.4 Switch on and off motor

3.4.1 Regular start and stop

In an operating installation the motor contactors are switched On and Off normally by the control system with the commands RUN FORWARD, RUN REVERSE and OFF.

Remark:
Whenever the supply voltage of the UMC22 is switched off and on the start of the motor needs a new 0 to 1 transition of the Run signal.

Switching On (Run) and Off is possible when the UMC22 is parametrized with one of the motor controlling Control functions e.g. Direct starter, Star-Delta starter etc. The exceptions are Transparent and Overload relay. Switching On (Run) and Off can be done:

via control system ⟷ via Control Panel ⟷ via digital inputs

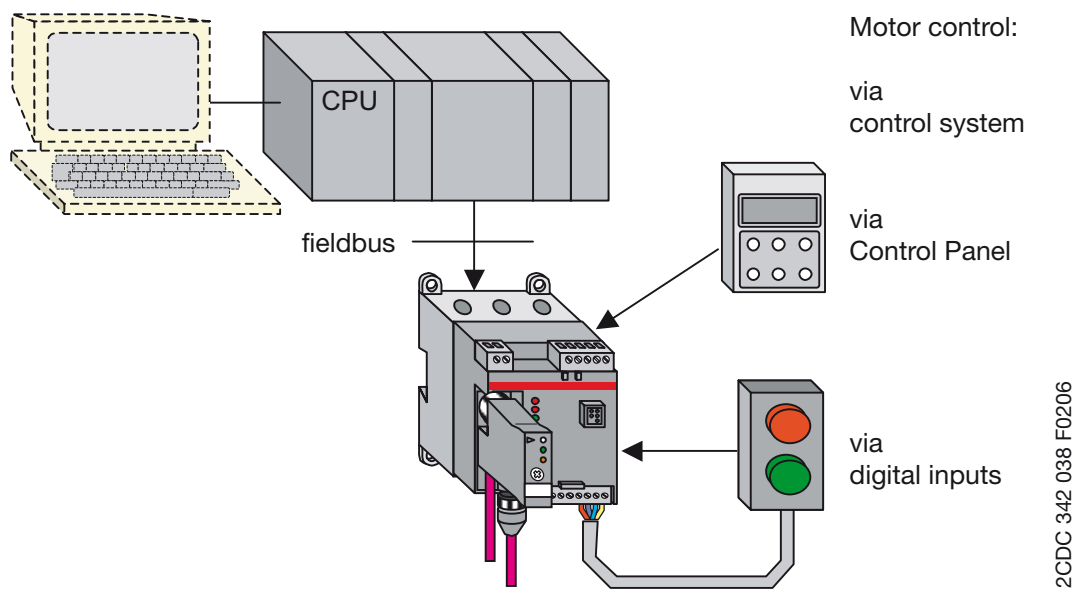

Fig. 3-7: Motor control via UMC22-FBP

3.4.1 Regular start and stop (continued)

Start the motor via:

▶ Control system, command RUN FORWARD or RUN REVERSE:

▷ Possible if the control system has set the command bit AUTO MODE = 1
& the Control Panel is not active (not in "Password panel control" mode).

▶ Control Panel:

▷ "Password panel control":
Always possible and dominating if the Control Panel is in "Password panel control" mode.
This mode is password protected and can be enabled and entered via the Control Panel only.
In this mode the Control Panel can seize the activity under all circumstances.

Run - Off toggle, display shows OUTPUT when running

▷ "Direct panel control":
Possible if the parameter *Local control* = *003* or *004* or *005*
& the control station sends the command AUTO MODE = 0.
Details see 3.7.3 and 9.2.3

▶ Digital inputs:

▷ "Local operation via DIs":
Possible if the parameter *Local control* = *on* or *002* or *003* or *004*
& the Control Panel is not active (not in "Password panel control" mode)
& the control station sends the command bit AUTO MODE = 0 in the command telegram.
Details see 5.3.4 and 9.2.3

Remark:

If the connection to the control system is interrupted (control station problem or fieldbus interrupted) the command AUTO MODE is regarded as = 0.

Stop the motor via:

▶ Control system, command OFF:

▷ Under all circumstances dominating against RUN FORWARD or RUN REVERSE, independend of the parameter *Local control* and the command AUTO MODE=0

▶ Control Panel:

▷ "Password panel control":
Always possible and dominating if the Control Panel is in "Password panel control" mode.
This mode is password protected and can be enabled and entered via the Control Panel only.
In this mode the Control Panel can seize the activity under all circumstances.

Off when running, change direction when off Run - Off toggle

▷ "Direct panel control":
Possible if the parameter *Local control* = *003* or *004* or *005*
& the control station sends the command AUTO MODE = 0.

▶ Digital input DI5:

▷ "Local operation via DIs":
Always possible and dominating if the parameter *Local control* = *on* or *002* or *003* or *004*.

Remark:

Off is always dominating under above named suppositions.
Details see 5.3.4 and 9.2.3

3.4.2 Stop via multi-function inputs

Multi-function inputs offer additional possibilities to survey the motor and the production process it is used for. Via the parameters *DI0 Multi-function input*, *DI1 Multi-function input* and *DI2 Multi-function input* the inputs DI0, DI1 and DI2 can be parameterized as multi-function inputs with the following functions:

- ▶ *Transparent* (default): status is monitored only to the fieldbus
- ▶ *Fault signal always / not delayed or delayed* with 1 to 255 s:
  The delay time starts whether the motor is running or not.
- ▶ *Fault signal dependent / delayed* with 1 to 255 s:
  The delay time starts only when the motor is running.
- ▶ *Motor off always / not delayed or delayed* with 1 to 255 s:
  The delay time starts whether the motor is running or not.
- ▶ *Motor off dependent / delayed* with 1 to 255 s:
  The delay time starts only when the motor is running.
- ▶ *Reset internal fault signal*
- ▶ *Test* → allows to start without motor (no current check-back when started)

Application example for "Fault signal dependent / delayed"

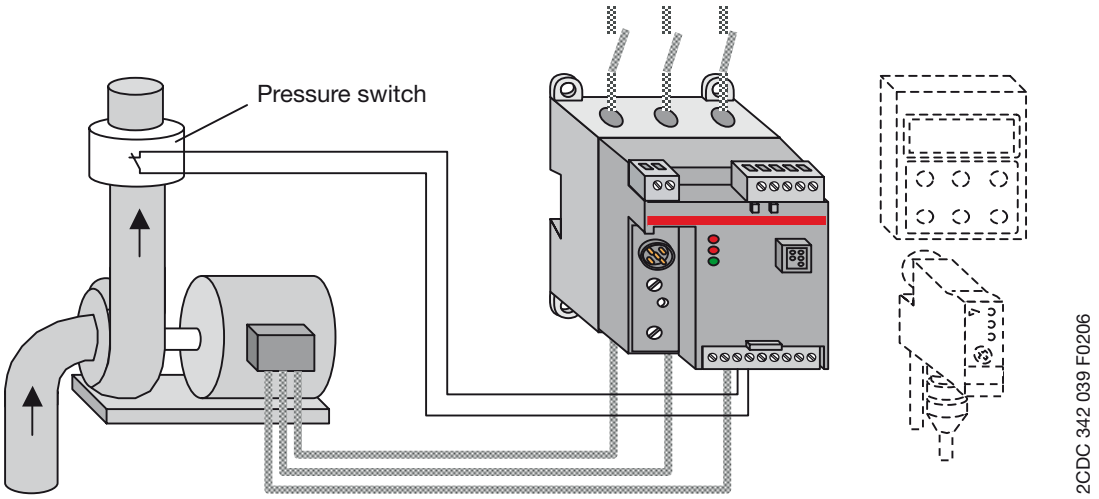

Situation: When the motor is starting there is no pressure. It takes some time until the pressure reaches the threshold value. The pressure has to appear within e.g. 4 seconds, otherwise the pump can be destroyed → Fault.

Solution: Set e.g. *DI0 Multi-function input = P032 (Fault signal dependent / delayed) with a delay time of 4 s)*:
If the pressure switch does not monitor "pressure present" within 4 s (or when the pressure signal disappears for more than 4 s during operation) the internal fault signal is set and the motor is stoped.

Remark:
The pressure signal is a closed-circuit signal: "pressure present" = closed contact.

Fig. 3-8: Application example Dry pump

3.5 Earth fault detection via multi-function inputs

The CEM11 device monitors if the sum of the currents flowing through it is zero. It can be used in motor feeders to detect leakage currents respectively ground faults caused for example by insulation breakdowns.

Detection of such ground faults can be
- used to interrupt the motor to prevent further damage, or
- to alert the maintenance personnel to perform timely maintenance.

The following figure shows how the earth fault sensor CEM11 can be connected to the UMC22.

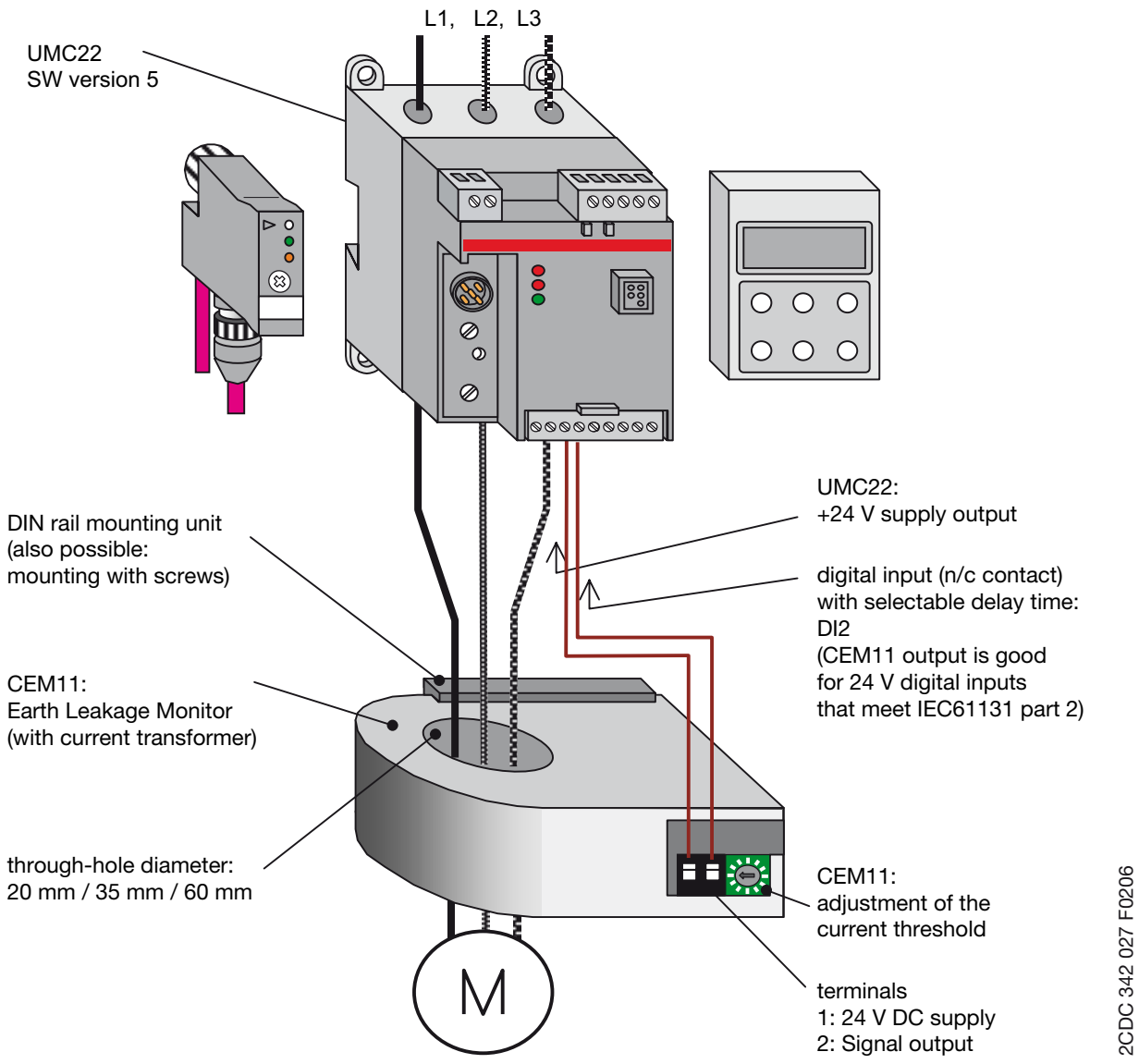

Fig. 3-9: UMC22 with connected earth fault monitor CEM11

Together with CEM11 the UMC22 is able to perform earth fault supervision, with the option of enabling earth fault trip or earth fault warning. To use CEM11 with UMC22 perform the following steps:

1. CEM11 must be connected to multifunction input DI2 and 24 V DC supply. As soon as DI2 is configured as earth fault input and the motor is running a filter becomes active to suppress noise.
2. Parameter 21 (*DI2 Multi-function input*) allows defining the time period T an earth fault condition must be present at minimum before a trip or warning occurs. It is adjustable from 1 to 25 s. See figures 3.10 and 3.11 for details.
3. Parameter 14 (*Start-Up Time*) is used as inhibit time of a ground fault trip from occurring during the motor starting sequence and is adjustable from 0-600 s. Please note that also the fault Motor blocked and the warnings Motor current high and low threshold are related to parameter 14.
4. Configure the threshold when an earth-fault should be signalled to the UMC. The current must be directly configured at the earth fault monitor (CEM11) itself.
   See the technical manual for further details.

In the following figures the behaviour of UMC22 is shown in dependency to parameter 21.

Example: If the motor should trip if for at least 16 seconds an earth fault signal is present parameter 21 has to be set to 84 (Start-up inhibit active) or 64 (Start-up inhibit inactive).

Earth fault monitor connected to DI2 and alarm and warning enabled. The warning signal is active as long as the fault is not acknowledged.

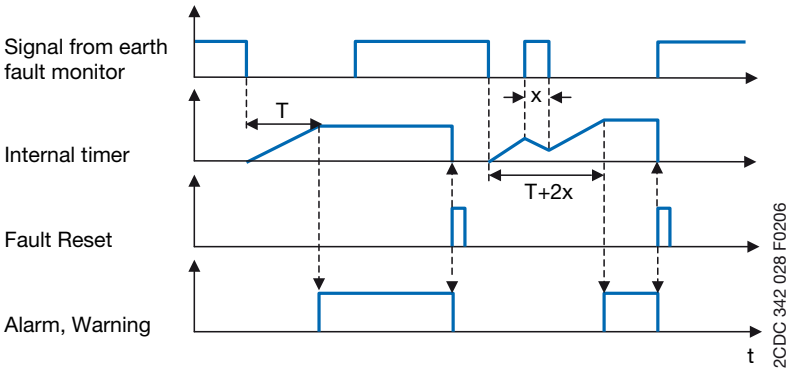

Fig. 3-10: Earth fault behaviour: Warning and fault message (alarm)

Earth fault monitor connected to DI2 but fault message (alarm) not enabled.The warning signal disappears if the earth-fault signal is not active for a user configured time T (see parameter 21).

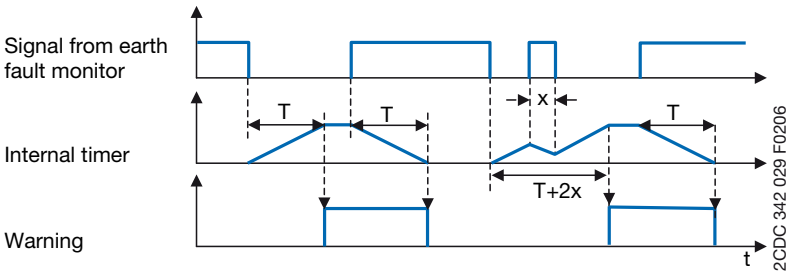

Fig. 3-11: Earth fault behaviour: Warning only

3.6 Motor protection with thermistor (PTC) acc. to EN 60947-8 (type A sensors)

The UMC22 provides terminals T1 and T2 for the connection of positive temperature coefficient (PTC type A sensors) thermistor sensors. PTC sensors are commonly embedded in motor stator windings to monitor the motor winding temperature.

Since PTC sensors react to actual winding temperature, enhanced motor protection can be provided to address such conditions as obstructed cooling and high ambient temperatures that cannot be addressed by the motor model.

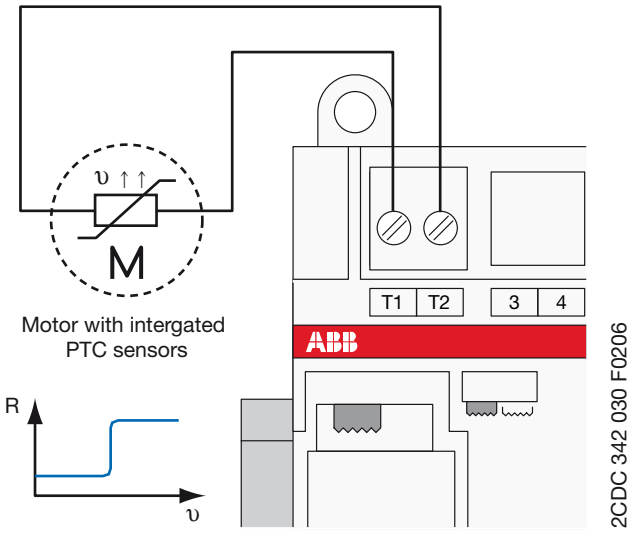

Fig. 3-12: UMC22 with connected PTC sensor

When the motor winding temperature reaches the PTC sensor's temperature rating, the PTC sensor's resistance transitions from a low to high value.

UMC22 is able to perform PTC supervision, with the option of enabling PTC fault trip or PTC fault warning.

Beside that UMC22 detects the following erroneous conditions in relation to the PTC inputs:
- Broken wire: If a connection wire between UMC22 and PTC is broken
- Short circuit: If the input terminals are directly connected

To enable PTC protection do the following steps:

1. Connect the PTC sensor wires to UMC inputs T1 and T2
2. Set parameter 6 (bits 2 and 3) (Bit 1 of parameter 6 is used to set Phase loss protection):

Bits of parameter 6	0000.0x--	PTC warning / PTC trip x = 0: PTC warning / x = 1: PTC trip / -: any
	0000.0-x-	PTC supervision x = 0: not active / x = 1: active / -: any
	0000.0--x	Phase loss protection x = 0: not active / x = 1: active / -: any For software version 3.5 phase loss protection is, independant of the setting, always activated (see chapter 4.3.7).

3.7 Signalling

3.7.1 Infos available on the LEDs

Connection to the fieldbus:

Caused by the definitions of the fieldbus type the meaning can differ slightly.

Green = on, red = off:
→ normal data exchange

Green = off, red = off:
→ check power supply

Both LEDs flashing:
→ self test running

One of the LEDs flashing:
→ no connection to the bus master or configuration error or parameters not valid.

Connection to the device:

Green = on, red = off:
→ normal data exchange

Green = off, red = off:
→ check power supply

Both LEDs flashing:
→ self test

One of the LEDs flashing:
→ no connection to the UMC22, configuration data of UMC22 are missing, ...

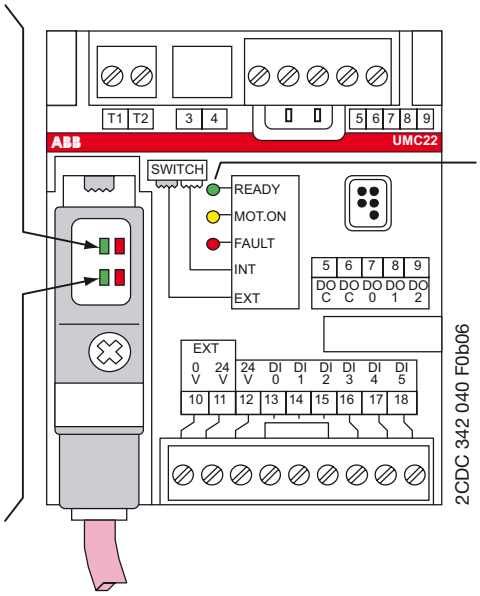

green: ready for operation

yellow: motor running (overload, check-back fault, blocking stops the motor)

red: Fault (overload, other failure)

If no LED is on check whether power is on and the SWITCH (above the FieldBusPlug socket) is on the appropriate position: EXT if supplied via terminals, INT if supplied via FieldBusPlug.

Remark:
LEDs on the UMC22 are covered if the Control Panel is mounted. LEDs on the FieldBusPlug remain free.

For more info see appropriate FieldBusPlug description.

Fig. 3-13: LEDs on the UMC22-FBP and the FieldBusPlug

3.7.2 Control Panel - Info and Password panel control

The Control Panel UMC-PAN can be installed directly on the front of the UMC22 or be attached over the extension cable UMC-CAB to the UMC22-FBP.

The new compatible version (R002) of the UMC-PAN indicates the device status of the UMCs via three LEDs in addition to the previously available functions. The meaning of the LEDs on the panel corresponds to those on the top side of the UMC.

Please note that until UMC software version V3.5.1 the yellow RUN LED only lights, if the motor was started via the Control Panel UMC-PAN. From software version 3.5.2 on, the yellow RUN LED lights also after starting the motor via bus or digital input. The flashing red LED indicates an error (e. g. TRIP)

The Control Panel offers access to:

- ▶ Slave address
- ▶ Status of the motor (running if OUTPUT is displayed) and status of the UMC22 inputs and outputs
- ▶ Actual current and Set current
- ▶ Detailed diagnosis information
- ▶ Service data
- ▶ All important parameters
  see chapter 5.3.1 "Parameter groups".

Additional the Control Panel allows to start and stop the motor ("Password panel control").

The access is arranged in three levels:

Monitoring: Starts with menu point address, offers only to check, not to modify values and parameters

Edit 1: Needs password and allows to change parameters during commissioning. "Password panel control" to start and stop the motor via Control Panel.

Edit 2: Accessible via Edit 1, to change parameters that are used mainly associated with the electrical circuitry

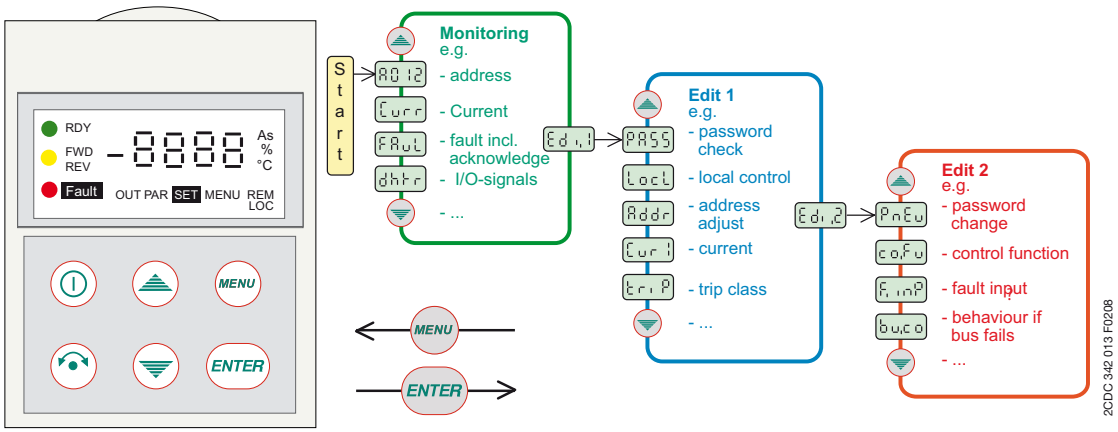

Fig. 3-14: Control Panel UMC-PAN - Operation levels

It is recommended to get familiar with this three-level operation before using the Control Panel e.g. to change parameters. For details see chapter 9.1.1.

Remark:

- ▶ Most of the changed parameters are taken over after motor off.
- ▶ Some parameters are taken over during power on.
- ▶ If changed by the Control Panel they are normally overwritten by the control system during power on, depending on the parameter *Parameter lock* that can be changed via Control Panel only.
- ▶ With Parameter *Parameter lock* = *Locked* the change of parameter values by control system, fieldbus and Control Panel can be inhibited.

NEW

3.7.3 Control Panel - Direct panel control

"Direct panel control" is dedicated to be used after commissioning. It prepares simplified start and stop of the motor and acknowledge of faults e.g. for less skilled user of an installation.

"Direct panel control" is possible if the parameter *Local control* = *003* or *004* or *005* (*L.003, L.004, L.005*) & the control station sends the command AUTO MODE = 0.

Remark:
If the connection to the control system is interrupted (control station problem or fieldbus interrupted) the command AUTO MODE is regarded as 0.

If "Direct panel control" is activated it is still possible to enter other menu points of the Control Panel e.g. to change parameters, etc.

Regarding the three-level access only the Monitoring level has been changed:

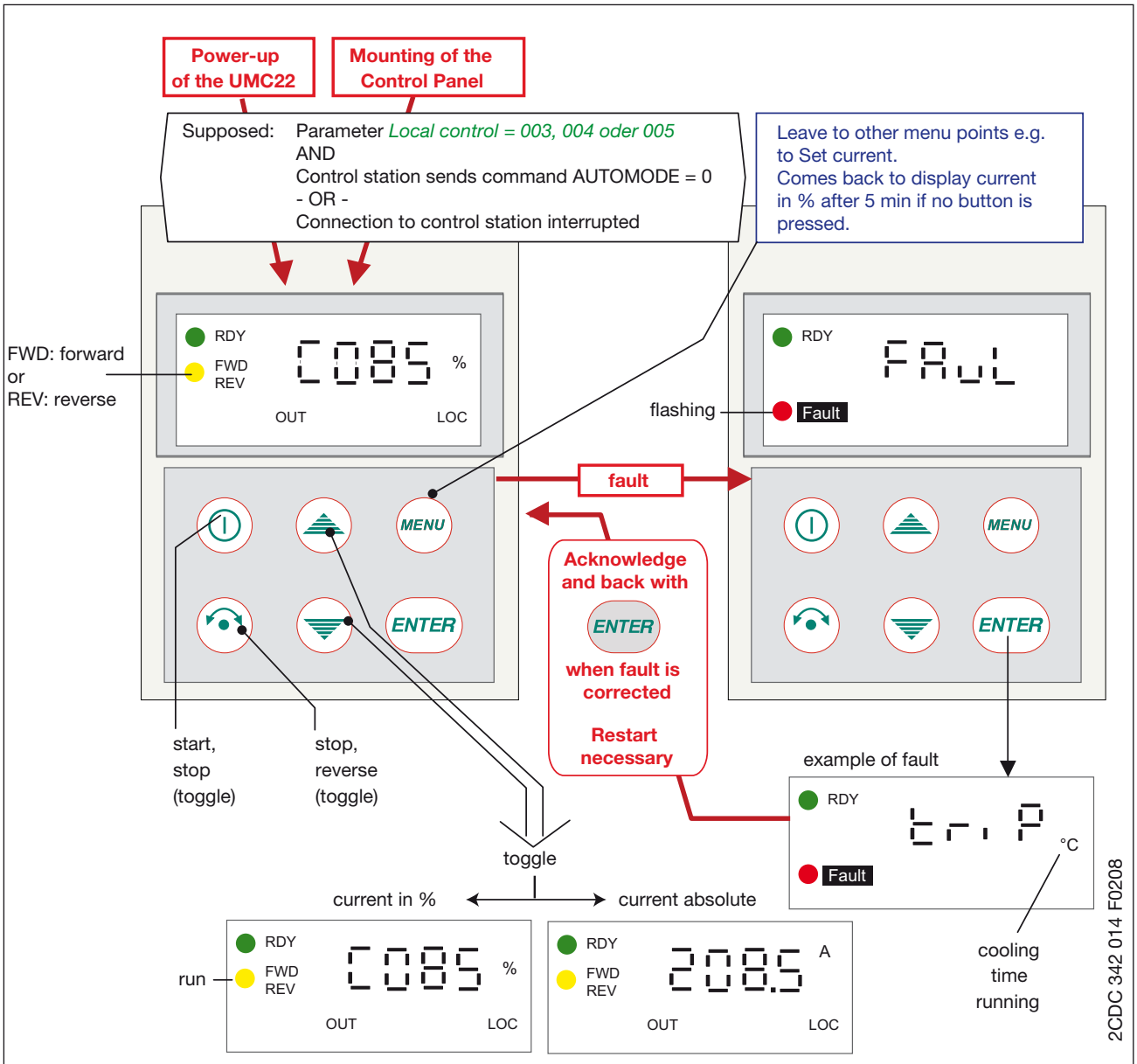

Fig. 3-15: Control Panel UMC-PAN - Operation level for "Direct panel control"

3.7.4 Fault indication and warnings

The UMC22 offers different possibilities to identify and to acknowledge a fault resp. a warning in cause of fault or warning.

Fault behaviour

All kinds of detected internal and external faults set the internal fault signal. Results:

- ► Fault is monitored to the fieldbus (see below).
- ► The output relays that control the motor contactors (depending on selected control function) open and switch off the connected motor.
- ► The red FAULT -LED on the UMC22 lights. The red one on the LCD panel flashes.
- ► The FAULT signal on the Control Panel flashes.
- ► If fault output is aktivated by parameter *Fault output* = *On*, the output DO2 will be set to 1.

Details concerning the single control functions see chapter 7.

Monitoring to the fieldbus / control system
Example diagnosis telegram for all Control functions exept Actuator 1-4:

Bit No.	7	6	5	4	3	2	1	0
Fault Byte 0	-	Self test failed F010 [2]	Fault signal on DI0, DI1 or DI2 [1] F011 [2]	-	-	-	-	-
Fault Byte 1	Overload (trip) fault trip [2]	Motor blocked F002 [2]	Communi-cation fault F003 [2]	Parameter out of range F004 [2]	Current check-back fault [1] F005 [2]	Relay 2 check-back fault [1] F006 [2]	Relay 1 check-back fault [1] F007 [2]	Relay 0 check-back fault [1] F008 [2]
Warning Byte 2	Motor current high threshold [1]	Motor current low threshold [1]	-	Cooling time running °C [2]	-	Self test running buSy [2]	-	-
Warning Byte 3	If Parameter out of range: Pamameter number (leading two stages of the parameter, e.g. "02" Current factor) If Self test fauled: Self test error number (only for service) In all other cases:							
	-	Fault on DI2 F024 [2]	Faut on DI1 F023 [2]	Fault on DI0 F022 [2]	Earth fault F020 [2]	PTC short-circuit F019 [2]	PTC wire break F018 [2]	PTC temperature F017 [2]

Fault description for all control functions see diagnosis data 5.2.4

[1] depending on the parameterization
[2] The table above also shows what is displayed by the Control Panel (9.2.1).

Fault acknowledge

Faults can be acknowledged

- ► via control system / fieldbus setting command FAULT RESET: 5.2.1
- ► via Control Panel:
  - ▷ Password panel control - always possible but needs password:
    Go to menu point „FAuL“ pressing twice the cursor down button. Twice button [ENTER] (9.2.1)
  - ▷ Direct panel control - if parametrized (5.3.4) and command AUTO MODE = 0 (5.2.1)
    Menu goes automatically to „FAuL“. Pressing button [ENTER] shows the kind of fault, another [ENTER] acknowledges the fault: 3.7.3.
- ► via DI0, DI1 or DI2 Multi-function input if parameterized (5.3.4)

Remark:
If the cause of the fault is not eliminated the internal fault signal is set again immediately.

3.8 Replace an UMC22 in case of faults

3.8.1 Replace an UMC22 in an operating installation

The UMC22 can be disconnected from the FieldBusPlug without disturbing the fieldbus and the other slaves. The FieldBusPlug is supplied via the voltage conducted together with the bus lines.

The FieldBusPlug keep stored the actual slave address and informs the control system that the connected device is lost.

After mounting and connecting a new UMC22, the control system will be informed that the missing device is connected to the FieldBusPlug again (supposed that the new UMC22 contains an invalid address A - - -).

Attention!

If the exchanged UMC22 contains a valid address and the parameter Address check is not active, the FieldBusPlug takes over the new address automatically. If this address is already used by an other field-bus slave, unpredictable bus faults may happen (e.g. bus master stops communication).

This allows the control system to download the former parameters and to start up the new UMC22 again with correct parameters.

4 Commissioning for use of motors in potential explosive atmospheres according to Directive 94/9/EC (ATEX)

4.1 General information for planning and commissioning

During planning the installation of the UMC22 to protect motors in potential explosive atmosphere consult chapter 3, specially the subchapters:

- ▶ Wiring (3.2)
  - ▶ Wiring and internal 24 V / 0 V connections (3.2.1)
  - ▶ Connection of contactors (3.2.2)
  - ▶ Motor current = Set current versus wiring (3.2.3)
  - ▶ External current transformer for higher currents (3.2.4)
- ▶ Interfacing to the fieldbus (3.3)
  - ▶ Addressing (3.3.1)
  - ▶ Address check (3.3.2)
  - ▶ Parametrization as a fieldbus slave (3.3.3)

Helpful for Commissioning and maintenance are the subchapters:

- ▶ Switch on and off motor (3.4)
- ▶ Signalling (3.7)
  - ▶ Info available on the LEDs (3.7.1)
  - ▶ Info available on the Control Panel (3.7.2)

Following chapters refer to the use of the UMC22-FBP to protect motors in potential explosive atmospheres:

- ▶ Certification (4.2)
- ▶ Commissioning Procedure - Setting parameters (4.3)
- ▶ Protection against unauthorized access (4.4)
- ▶ Self Tests (4.5)
- ▶ Fault behaviour (4.6)

4.2 Certification

Referring the safety aspect the UMC22 represents a single channel device that features additional Self Tests to guarantee a safe motor protection on a high level. The UMC22 itself cannot be mounted in potential explosive atmospheres without appropriate enclosure.

The EC-type-examination Certificate Number of the UMC22 is:

II (2) GD PTB 04 ATEX 3012

This certification includes the four current transformer types KORC 4L185R/4, 4L310R/4, 5L500R/4 and 5L850R/4 as named in the chapter 5.

Other Standards to be regarded:

EN 50281-1-1: Electrical apparatus for use in the presence of combustible dust - Part 1-1: Electrical apparatus protected by enclosures Construction and testing

EN/IEC 60079-14: Electrical apparatus for explosive gas atmospheres - Electrical installation in hazardous areas

EN/IEC 60079-17: Electrical apparatus for explosive gas atmospheres - Inspection and maintance of electrical installation in hazardozs areas

EN/IEC 60034-1: Rotating electrical machines, Rating and performance

Attetion!

The UMC22 cannot be used together with Frequency Converters and similar components.

4.3 Commissioning Procedure - Setting parameters

The parameters that affect the safety have to be set carefully. Following all these parameters:

Attetion!

Only skilled people are allowed to commission and to parametrise installations with UMC22.

4.3.1 Phase loss protection / PTC protection

It is not allowed to use the PTC function to protect motors in potential explosive atmospheres. For this applications it can be used as an additional information of the motor status only.

If PTC protections is needed, a separate PTC relay with ATEX approval has to be used.

4.3.2 Earth fault detection

It is not allowed to use the earth fault detection to protect motors in potential explosive atmospheres. For this applications it can be used as an additional information of the motor status only.

If earth fault detection is needed, a separate earth fault detection with ATEX approval has to be used.

4.3.3 Control Function

= any motor control function, not Transparent, not Overload (Default Transparent). If the Control function is not set once the UMC22 does not start operation.

4.3.4 Set current 1, Set current 2

Default = 0.5 A

4.3.5 Trip Class

Default = 10

Remark:

Motors dedicated to be used in potential explosive environment need the approval by the PTB or a similar institution.
It concerns particularely the relation breakaway starting current to nomonal current I_a / I_n and the heating time t_E that have to be named on the certificate and the motor type label.

The tripping time must be shorter than the heating time t_E, this means the tripping curve of a cold motor has to be below the coordination point I_a/I_n and t_E.

Example: Motor with enhanced safety has the data:
Power = 7.5 kW, relation I_a/I_n = 7.4, heating time t_E = 11 s

Tripping time for cold motors at 3-pole symmetric load

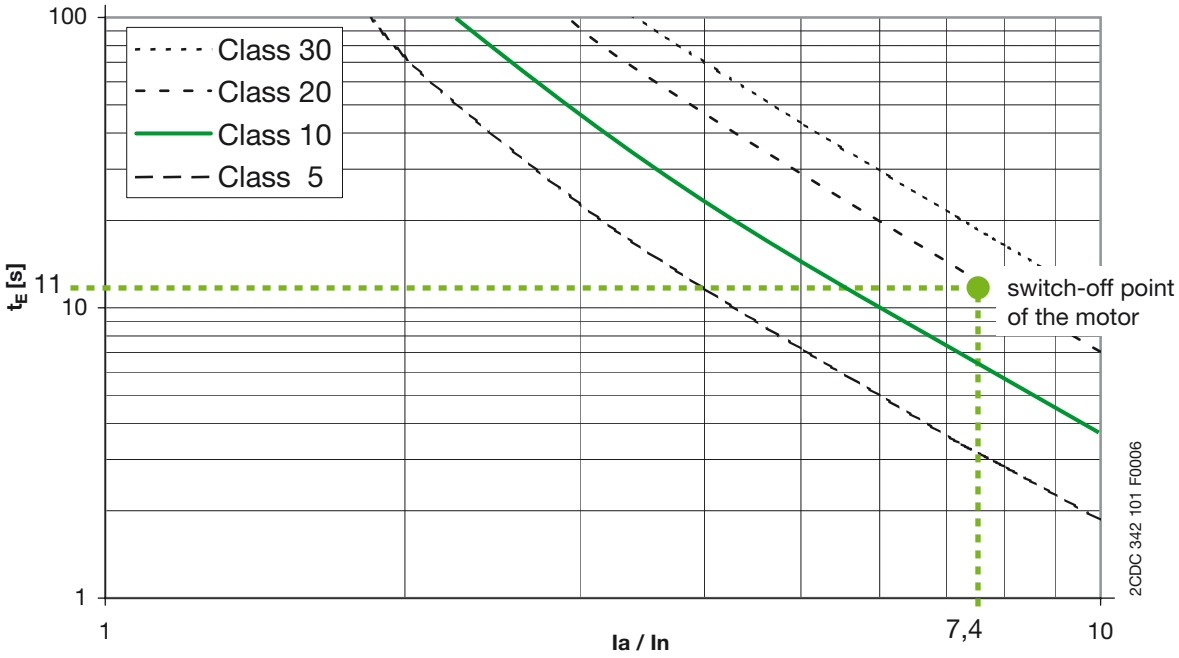

The trip classes 5 and 10 are allowed because the appropriate times (3 s, 6 s) are below the time t_E of the motor (including the tolerance 10% of the UMC22).

Tripping times for phase loss

Trip class	5	10	20	30
Tripping time	1.5 s	3 s	6 s	9 s

Assumption: The motor current has to be minimum 70 % of the rated current in fault free status. In case of phase unbalance or phase loss, the difference between the highest and the lowest phase current must-be ≥ 50 % to trip.

4.3.6 Cooling time

Default = 120 s

The time that has to be adjusted depends on:
- Motor size: larger size → longer cooling time
- After trip motor still rotating or standstill (without ventilation → longer cooling time)
- Environment temperature: higher temperature → longer cooling time

Regarding this situation the appropriate cooling time can be estimated. Some examples of motor cooling time constants (t.c.) (motor standstill) can help:

Size	1 kW - 1 pole	5 KW -1 pole	5 kW - 2 pole	20 kW - 2	20 kW - 3	100 kW - 3
t.c.	10 min	15 min	20 min	30 min	40 min	70 min

Remark:
After three times of the cooling time constant the environment temperature is nearly reached.

4.3.7 Phase loss protection

Software-Version 3.5: To avoid an operating error, phase loss protection is always activated and can not be switched off.

4.3.8 Check-back

Must: Check-back = Motor current = 2 (default)

4.3.9 Automatic fault reset

Automatic fault reset = Off (= 0). This parameter is definitely deactivated with any motor control function.

4.3.10 Bus Fault Reaction

Bus Fault Reaction = switch Off (default) or retain status of all relay contacts as desired.

Remark:

After setting these parameters they should be checked again to be sure.

Attention!

The Cooling time operates seperately from the internal thermal motor model that calculates the reduction of the motor temperature with the time constant approx. 20 min. Details see chapter 6.

4.4 Protection against unauthorized access

The access to above named parameters has to be locked locally with:

- Parameter Locked = On that can be set only locally with the Control Panel.

Menu displayed on the Control Panel:

This ensures that the safety related parameters are not changed via the control system or Control Panel per hasard or by unauthorized people.
The parameters are stored in an EEPROM and read by the UMC22 after power up.

To disable any unauthorized abolishment the 'Parameter Locked' a password has to be set:

- Password new = not 0000. It can be set only locally via Control Panel.

4.5 Self Tests

Self Test (Power-up)

During power up the UMC22 Power-up Self Test checks different functions such as:
- Check the checksum in the differnt kinds of memories,
- Measuring channels
- etc.

Self Test (Overload)

During operation - but only if the motor is switched off - the Overload Self Test can be started, either locally via Control Panel or via the control system and the fieldbus.

- The Overload Self Test creates a trip setting the signals normally delivered by the current transformers to a high level and checking the time until the circuit trips.
- Similar to that it creates a phase loss fault and checks the correct reaction.
- All tests named under Power-up test are carried out also.

Attention!

Starting the Self Test (Overload) sets the thermal memory to zero. This means a warmed up motor is not protected correctly. The waiting time adjusted with the parameter Cooling time is not sufficient to guarantee correct motor protection. It is recommended to start the Self Test (Overload) only when the motor is not warmed up.

Remark:

The Self Test (Overload) runs about 10 s until it has finished.
When the control system starts the Self Test (Overload) it has to check whether the start has happened reading the bit Self test in the diagnosis telegram. Similar for the Control Panel, shows „buSY“ as long as the Self Test (Overload) is running.
The Self Test must (Overload) be started at least every 3 years and during maintenance, but additionally during operation as often as the particular application requests it.

4.6 Fault behaviour

If any Self Test detects a fault,
- the operation is not started, output relays are not switched on,
- the internal fault bit is set, following the monitoring signal FAULT is sent to the fieldbus, the red LED lights on and the FAULT signal on the Control Panel display flashes.
- the diagnosis signal Self test fault is set
- if the parameter ’Fault output’ = On the relay output DO2 switches on.

The fault bit cannot be resetted neither with the Control Panel nor via the control system. Indeed a power-on resets the fault signal but the Power-up Self Test normally detects the fault if it is still present.

In this case the UMC22 - current transformer unit and controller unit mounted as one device - must be sent to the supplier. It is not allowed to disassemble devices used for applications as described in this chapter.

5. Data structure

5.1 Device configuration

Type	Group	Type / example *	Quantity / Presentation	Direction
Cyclic data exchange	Monitored signals (input)	DI = digital input	16 single Bits in 1 Word	read
		AI = analog input	1 Word	read
	Commands (outputs)	DO = digital output	16 single Bits in 1 Word	write
		AO = analog output	-	write
other basic data transfer	Diagnosis	Faults and warnings	4 Byte in one block	read
	Configuration, Identification	Quantity of DI, DO,... and product code	6 Word in one block	read/write
	Bus specific data	baud rate, time-out, ...	depends on the fieldbus	read/write
	Block parameters	Control function ... Trip class ...	20 Word in one block	write
Acyclic data exchange	Single parameters	Control function ... Trip class ...	27 single Parameter in Byte, Word, Double Word	read/write

Remarks:

Diagnosis: The diagnosis telegramms of the PROFIBUS DP slaves start with additional 2 bytes that concern the number of diagnosis bytes and status of the slave.

Configuration: Modern fieldbuses such as PROFIBUS DP-V0,-V1 and DeviceNet fix the configuration data using the appropriate configuration files (e.g. "xxx.GSD", "xxx.EDS") and write it automatically into the FieldBusPlug during power up.

Most of the FieldBusPlug types compare the configuration data sent by the UMC22 with the configuration data received from the fieldbus. When the result of the comparison is ok, parameters can be downloaded and the operation can start.

The configuration data set contains the product code, UMC22: 0x2AFB = 11003.

Additional to the above named data the FieldBusPlug - only the FieldBus-Plug, not the UMC22 - can send on request identification data such as vendor name, slave address and data baud rate as defined in the appropriate fieldbus standard.

Parameters: Depending on the fieldbus type the parameters can be
- written as one parameter block - only complete block - (e.g. PROFIBUS DP-V0) or
- written and read as single parameters (e.g. PROFIBUS DP-V1, DeviceNet).

The three service parameters *Operation hours*, *Number of starts* and *Number of trips* can be read only.

5.2 Bus data - Monitoring, command, diagnosis

5.2.1 Monitoring, command and diagnosis data - Overview

Monitoring telegram, digital: (sent from the UMC22 to the control system)

Bit No.	7	6	5	4	3	2	1	0
Byte 0	WARNING	FAULT	LOCAL CONTROL	REVERSE LOCK-OUT TIME	-	RUN FORWARD [2] / opening [3]	OFF	RUN REVERSE [2] / closing [3]
Byte 1	DI5 (UMC input)	DI4 (UMC input)	DI3 (UMC input)	DI2 (UMC input)	DI1 (UMC input)	DI0 (UMC input)	-	-

Monitoring telegram, analog: (sent from the UMC22 to the control system)

Bit No.	7 = LSB	6	5	4	3	2	1	0 = MSB
Byte 0	Byte weight: low	MOTOR CURRENT (% of Set current)						
Byte 1	Byte weight: high							

Remark:
Some fieldbuses transfer digital input signals together with analog input signals in words

Command telegram, digital only: (sent from the control system to the UMC22)

Bit No.	7	6	5	4	3	2	1	0
Byte 0	-	FAULT RESET	AUTO MODE	-	SELF TEST	RUN FORWARD [2] / open [3]	OFF	RUN REVERSE [2] / close[3]
Byte 1	DO2 [1] (UMC output)	DO1 [1] (UMC output)	DO0 [1] (UMC output)	-		-	-	-

[1] depending on the parameterization
[2] not for Actuator 1 to 4
[3] only for Actuator 1 to 4

5.2.1 Monitoring, command and diagnosis data - Overview (continued)

Diagnosis telegram

Telegram sent from UMC22 to control system.

Depending on the fieldbus type the bus master requests the diagnosis telegram from the concerned slave automatically or not, see appropriate FieldBusPlug description.

All faults can be acknowledged via:

► control system: Command Byte 0, Bit 6 =1 (FAULT RESET)

► Control Panel: menu point fault messages (FAuL)

► multi-function input (if parameterized)

Diagnosis telegram
1) for all control functions except Actuator 1 to 4
2) for control function Actuator 1 to 4

for	Bit No.	7	6	5	4	3	2	1	0
1)	Fault Byte 0	-	Self test failed F010 [2]	Fault signal on DI0, DI1 or DI2 [1] F011 [2]	-	-	-	-	-
2)		Sametime OLS and CLS F009 [2]			OLS 1 → 0 without close command F012 [2]	CLS 1 → 0 without open command F013 [2]	OLS 1 → 0 not within 3 s [4] after close command F014 [2]	CLS 1 → 0 not within 3 s [4] after open command F015 [2]	OTS 1 → 0 but not OLS (intermediate position) F016 [2]
1)	Fault Byte 1	Overload (trip) fault trip [2]	Motor blocked F002 [2]	Communi-cation fault F003 [2]	Parameter out of range F004 [2]	Current check-back fault [1] F005 [2]	Relay 2 check-back fault [1] F006 [2]	Relay 1 check-back fault [1] F007 [2]	Relay 0 check-back fault [1] F008 [2]
2)							OLS 0 → 1 without open command F006 [2]	CLS 0 → 1 without close command F006 [2]	CTS 1 → 0 but not CLS (intermediate position) F008 [2]
1)	Warning Byte 2	Motor current high threshold [1]	Motor current low threshold [1]	-	Cooling time running °C [2]	-	Self test running buSy [2]	-	-
2)									Run-time exeeded [3]
1) + 2)	Warning Byte 3	If Parameter out of range: Pamameter number (leading two stages of the parameter, e.g. "02" Current factor) If Self test fauled: Self test error number (only for service) In all other cases:							
		-	Fault on DI2 F024 [2]	Faut on DI1 F023 [2]	Fault on DI0 F022 [2]	Earth fault F020 [2]	PTC short-circuit F019 [2]	PTC wire break F018 [2]	PTC temperature F017 [2]

OLS = "Open limit switch" (active signal) CLS = "Closed limit switch" (active signal)
OTS = "Open torque switch" (closed circuit signal) CTS = "Closed torque switch" (closed circuit signal)

[1] depending on the parameterization [2] displayed on the Control Panel
[3] Run-time limit: max. running time open ⟷ close. Use Parameter *Star-delta starting time*.
[4] Start surveying time can be elongated (5.3.4)

5.2.2 Monitoring data - Details

Digital monitorings

Byte	Bit	Short description	Status	Description
0	0	**RUN REVERSE**	1	Motor running reverse **and** check-back (current/aux. contact) = 1
	1	**OFF**	0	RUN command is active **or** current is still flowing after off command
			1	Motor stopped **and** no current is flowing **and** no RUN command is active
	2	**RUN FORWARD**	1	Motor running forward **and** check-back (current/aux. contact) = 1
	3	-		-
	4	**REVERSE LOCK-OUT TIME** [2]	0	Reverse lock-out time is not running.
			1	Reverse lock-out time running. Starts with OFF command. The command of the opposite direction is accepted only when Reverse lock-out time is over.
	5	**LOCAL CONTROL**	0	Local control is not active.
			1	Local control via Control Panel or digital inputs is activated. RUN commands of the control system are ignored. Details see chapter 5.3.4
	6	**FAULT**	0	No fault exists
			1	Any Fault condition exists: Overload, no check-back when started, etc. Details see Diagnosis telegram, Fault Bytes 0 and 1. Fault must be acknowledged via fieldbus command FAULT RESET or with Control Panel.
	7	**WARNING**	0	No warning exists
			1	Any warning exists. Details see Diagnosis telegram, Warning Byte 2 and 3.

1	0	**UMC22 input DI5**	-	Reads UMC22 digital inputs DI0 ...DI5, independent of the parameterizing
	1	**UMC22 input DI4**	-	
	2	**UMC22 input DI3**	-	
	3	**UMC22 input DI2**	-	
	4	**UMC22 input DI1**	-	
	5	**UMC22 input DI0**	-	
	6	-	-	-
	7	-	-	-

Analog monitorings

0	0-7	**Motor current in % of set current**	-	Byte low
1	0-7		-	Byte high

[1] Only for reversing starter!

5.2.3 Commands - Details

Byte	Bit	Kurzbeschreibung	Zustand	Beschreibung
0	0	**RUN REVERSE**	0 → 1 transition	Motor starts running reverse or with speed 2 **Remarks:** see under RUN FORWARD
	1	**OFF**	1	Motor stops as long as this signal is 1. OFF dominates RUN commands.
	2	**RUN FORWARD**	0 → 1 transition	Motor starts running forward or with speed 1. **Remarks:** **Reversing starter: start in opposite direction** To start the opposite direction an OFF command is necessary. OFF starts immediately the Reverse lock-out time. When the Reverse lock-out time has elapsed, the motor can be started with the 0 → 1 transition of the opposite / different RUN command. **Pole-changig starter: change speed** Change of the speed is possible immediately.
	3	**SELF TEST**	0 → 1 transition	Internal test of the HW and SW starts (memory, measuring channels etc.). The self test can only be started when the motor is Off. Otherwise the signal Self test failed is set. **Attention!** Starting the self test resets the thermal memory to zero!
	4	**reserved**		-
	5	**AUTO MODE**	0	Supposed the parameter *Local control = On, 002, 003 or 004 (Local operation via DIs)*: The motor can be started via digital inputs of the UMC22. OFF via control system and via DIs is always possible.
			1	Run via digital inputs is blocked. OFF commands are always possible.
	6	**FAULT RESET**	0 → 1 transition	Resets all resetable faults (overload, check-back fault, etc.)
	7	-	-	-

1	0-4	-	-	-
	5	**UMC22 output DO0**	-	Transparent control of UMC22 digital output DO0...2, if not used by any *Control function* different from *Transparent* or *Overload relay*.
	6	**UMC22 output DO1**	-	
	7	**UMC22 output DO2**	-	

5.2.4 Diagnosis - Details

Byte	Bit	Panel	Short description	Description
0	0	F016	**OTS 1 → 0 but not OLS (= Intermediate position) (Fault)** [2]	Intermediate position is monitored: signal from open torque switch has switched from 1 → 0 but signal from open limit switch has not switched from 0 → 1. Reason: e. g. connection to the torque switch has been interrupted (closed circuit)
	1	F015	**CLS 1 → 0 not within 3 s after open command (Fault)** [2]	Signal from closed limit switch has not switched from 1 → 0 within 3 s after open command.
	2	F014	**OLS 1 → 0 not within 3 s after close command (Fault)** [2]	Signal from open limit switch has not switched from 1 → 0 within 3 s after close command.
	3	F013	**CLS 1 → 0 without open command (Fault)** [2]	Signal from closed limit switch has switched from 1 → 0 without an open command. Reason: e.g. faulty contact.
	4	F012	**OLS 1 → 0 without close command (Fault)** [2]	Signal from open limit switch has switched from 1 → 0 without a close command). Reason: e.g. faulty contact.
	5	F011	**Fault signal on DI0, DI1 or DI2 (Fault)**	At least one multi-function input has a fault signal (0-signal) e.g. from a thermistor module. **Assumption:** At least one multi-function input is parameterized as *Multi-function input = 001 (Fault signal always / not delayed)* (closed-circuit principle).
	6	F010	**Self test failed (Fault)**	Self test has failed or was started during motor running. **Remark:** This fault can not be acknowledged.
	7	F009	**Same time OLS and CLS (Fault)** [2]	Run-time: max. allowed running time open ⟷ close. For adjustment use parameter *Star-delta starting time*.

1	0	F008	**Relay 0 check-back fault (Fault)** [1]	No 1-signal from auxiliary contact at input DI0 within 300 ms after switching on the contactor or 1-signal at input DI0 even if contactor is not switched on. **Supposition:** Parameter *Check-back = Auxiliary contacts*.
			CTS 1 → 0 but not CLS (= Intermediate position) (Fault) [2]	Intermediate position is monitored: Signal from closed torque switch has switched from 1 → 0 but signal from closed limit switch has not switched from 0 → 1. Reason: e.g. connection to the torque switch has been interrupted (closed circuit)

[1] For all control functions ecxept Actuator 1-4!
[2] Only for control function Actuator 1-4!

5.2.4 Diagnosis - Details (continued)

Byte	Bit	Panel	Short description	Description
1	1	F007	**Relay 1 check-back fault (Fault)** [1]	No 1-signal from auxiliary contact at input DI1 within 300 ms after switching on the contactor or 1-signal at input DI1 even if contactor is not switched on. **Supposition:** Parameter *Check-back* = *Auxiliary contacts*.
			CLS 0 → 1 without close command (Fault) [2]	Signal from closed limit switch has switched from 0 → 1 (= "closed position" is monitored) without close command.
	2	F006	**Relay 2 check-back fault (Fault)** [1]	No 1-signal from auxiliary contact at input DI2 within 300 ms after switching on the contactor or 1-signal at input DI2 even if contactor is not switched on. **Supposition:** Parameter *Check-back* = *Auxiliary contacts*.
			OLS 0 → 1 without open command (Fault) [2]	Signal from open limit switch has switched from 0 → 1 (= "Open position" is monitored) without open command.
	3	F005	**Current check-back fault (Fault)**	No motor current within 300 ms after switching on or motor current is already flowing 300 ms after switching off. **Assumption:** Parameter *Check-back* = *Current*.
	4	F004	**Parameter out of range (Fault)**	Received parameter exeeds high or low limit. The accompannying parameter number is shown in Diagnosis Byte 3.
	5	F003	**Communication fault (Fault)**	UMC22 does not receive valid telegramms: - control system, fieldbus or FieldBusPlug is out of order or interrupted or - FieldBusPlug and UMC22 slave address are different (parameter *Address check* = *On*) **Remark:** The diagnosis bit is sent to the control system after reconnection. When the communication is correct again after fault the motor can be started immediately without fault acknowledge.
	6	F002	**Motor blocked (Fault)**	Motor current over blocking current threshold. **Assumption:** Parameter *Blocking current threshold* is activated.
	7	trip	**Overload fault (Fault)**	Overload or phase loss has lead to trip. Cooling time has started. As long as the cooling time is running the °C on the disply flashes. Acknowledge is possible when the cooling time has elapsed. **Remark:** Blocking causes also overload fault. In this case cooling time is not started.

[1] For all control functions ecxept Actuator 1-4!
[2] Only for control function Actuator 1-4!

5.2.4 Diagnosis - Details (continued)

Byte	Bit	Panel	Short description	Description
2	0	-	**Run-time exeeded (Warning)** [2]	
	1	-	**reserved**	-
	2	buSy	**Self test running (Warning)**	Self test is running
	3	-	-	-
	4	°C	**Cooling time running (Warning)**	Cooling time is running.
	5	-	-	-
	6	-	**Motor current low threshold (Warning)**	Motor current is below the low threshold current. **Assumption:** Parameter *Low current threshold* is activated.
	7	-	**Motor current high threshold (Warning)**	Motor current is above the high threshold current. **Assumption:** Parameter *High current threshold* is activated.

3	0-7	-	**Parameter number, Selft test fault number**	Neither: Parameter numbers above 27 are not accepted (parameter numbers are only possible for buses that allow access to single parameters) Nor: Self test fault number (for service only) Else:
	0	F017	**PTC temperature**	Motor temperature to high
	1	F018	**PTC wire break**	One of the PTC feed lines is broken
	2	F019	**PTC short-circuit**	
	3	F020	**Earth fault**	
	4	F022	**Fault on DI0**	External fault signaled via DI0
	5	F023	**Fault on DI1**	External fault signaled via DI1
	6	F024	**Fault on DI2**	External fault signaled via DI2
	7	-	-	-

[1] For all control functions ecxept Actuator 1-4!
[2] Only for control function Actuator 1-4!

5.3 Parameters

Loading parameters into the UMC22

To load parameters into the UMC22 different ways are possible depending on the fieldbus and the control system:

- ▶ The slave configuration file (e.g. GSD file for PROFIBUS DP) contains the parameters.
  The parameters are changed during configuration of the fieldbus and are loaded in the UMC22 during switching on (block transfer, see below).
- ▶ The slave configuration is made via particular functions or tools of the control system e.g. EDS file (DeviceNet) or FDT/DTM (PROFIBUS DP/V1; normally single parameter transfer).
- ▶ The parametrization is done via "handmade" application program of the control system (Single parameter or complete block transfer, see below)
- ▶ The Control Panel allows to set most of the parameters (9.1).
- ▶ As a special feature the Control Panel can be used to read the complete parameter set of a parameterized UMC22 and to transfer it to another UMC22 (9.2.3).

Remark:
Some parameters are taken over with "power up", others during "motor off". Provided that the internal fault bit is not set.

5.3.1 Parameter groups

Access via control system and/or Control Panel
The parameters are arranged into groups that apply for:

Parameter group: Control function

- ▶ Control function (8.)
  - ▷ Transparent (8.1)
  - ▷ Overload relay (8.2)
  - ▷ Direct starter (8.3)
  - ▷ Reversing starter (8.4)
  - ▷ Star-delta starter 1 (8.5)
  - ▷ Star-delta starter 2 (8.6)
  - ▷ Pole-changing starter 1 (8.7)
  - ▷ Actuator 1 to 4 (8.8)

Parameter group: Attached control function

- ▶ Local operation via digital inputs
- ▶ Check-back
- ▶ DI0, DI1 and DI2 Multi-function inputs
- ▶ Fault output
- ▶ Reverse lock-out time
- ▶ Star-delta changeover mode / Start surveying time
- ▶ Star-delta starting time / Rune time limit

Parameter group: Current settings

- ▶ Set current 1
- ▶ Set current 2
- ▶ Current factor

5.3.1 Parameter groups (continued)

Parameter group: Overload protection

- ▶ Trip class
- ▶ Phase loss protection
- ▶ Cooling time
- ▶ Automatic fault reset
- ▶ Start-up time *
- ▶ Blocking current threshold *
- ▶ Low current threshold *
- ▶ High current threshold *

Parameter group: Communication

- ▶ Bus fault reaction
- ▶ Address check *

Parameter group: Sercive info

No parameter, only additional information, control system can only read them, change only by Control Panel

- ▶ Self test
- ▶ Operating hours
- ▶ Number of starts
- ▶ Number of trips

Parameter group: Other info

These parameters are only accessible via Control Panel

- ▶ Address
  The fieldbus address can be changed also with the separate Addressing Set CAS21-FBP.0.
- ▶ Password panel control (9.1.4 and 9.2.2)
  Switch on and off motor. Dominating against control system, but needs password.
- ▶ Password
  Password needed for entering Menu level 2 and 3 of Control Panel.
- ▶ Change password
  Change password for entering Menu level 2 and 3 of Control Panel.
- ▶ Bus connection
  Can be set to Off when UMC22 is used stand alone without connection to a control system.
- ▶ Parameter lock
  Blocks the change of the parameters -
  mainly used for use of the motor in potential explosive atmospheres.
- ▶ Parameter transfer
  Transfer (read/write) of the complete parameter set from one UMC22 to one or more other UMC22.
- ▶ Reset to default
  Reset all values to default, except the values of the parameters Address, Operating hours, Number of starts and Number of trips.

* These parameters can only be changed by the control system, not with the Control Panel.

5.3.2 Single Parameter Transfer

Using the numeros of the Parameters

Para No.	Qty. Byte	Parameter name	Definition / Range	Default value (text version)	Default (digital)	take-over after [1]
01	4	Set current 1	0.24-3200.00 A, step: 0.01 A	0.5 A	50	motor off
02	2	Current factor	100-64000 %, step: 1 %	100 % = 1	100 [2]	motor off
03	4	Set current 2	0.24-3200.00 A, step: 0.01 A	0.5 A	50	motor off
04	1	Trip class	Class 5, Class 10, Class 20, Class 30 (Value 0, 1, 2, 3)	Class 10	1	motor off
05	1	DI0 Multi-function input	000 to 048	Transparent	000	motor off
06	1	Phase loss protection	Off (0), On (1), (2), (3), (4), (5), (6), (7)	On	1	motor off
		Please read the safety remark in subsection 5.3.4!				
07	1	DI1 Multi-function input	000 to 048	Transparent	000	motor off
08	1	Low current threshold	5-100 % * Set current, step: 5 %	50 %	10	motor off
09	1	High current threshold	100-800 % * Set current, step: 5 %	150 %	30	motor off
10	2	Cooling time	30-3600 s, step: 0.1 s	120 s	1200	motor off
11	1	Automatic fault reset	Disabled (0), Autoreset (1)	Disabled	0	motor off
12	1	Control function	Transparent (1), Overload relay (2), Direct starter (3), ...	Transparent	1	motor off [3]
13	1	Check-back	Auxiliary contontacts (1), Motor current (2), Simulation (3)	Motor current	2	motor off
14	2	Start-up time	0 - 600 s, step: 0.1 s	120 s	1200	motor off
15	1	Star-delta changeover mode	Time (0), Current (1)	Current	1	motor off
16	2	Star-delta starting time	1 - 3600 s, step: 0.1 s	60 s	600	motor off
17	2	Reverse lock-out time	0.2 - 3600 s, step: 0.1 s	2 s	20	motor off
18	2	Operating hours of motor	0 - 65·535 h, step: 1 h	0	0	(read only)
19	4	Number of starts	0 - 1000‘000, step: 1	0	0	(read only)
20	1	Bus fault reaction	Relais off (0), Outputs retain status (1)	Relais off	0	motor off
21	1	DI2 Multi-function input	000 to 089	Transparent	000	motor off

[1]: but only when the internal fault bit is not set.
[2]: 1 is also regarded as 100 % due to the compatibility to older configuration files (.GSD, .EDS...)
[3]: Only the control function Overload Relay requires a power cycle to become active.

5.3.2 Single Parameter Transfer using the numeros of the Parameters (continued)

Para No.	Qty. Byte	Parameter name	Definition / Range	Default value (text version)	Default (digital)	take-over after [1)]
22	1	Local control	Off (0), On (1), 002 (2), 003 (3), 004 (4), 005 (5)	Off	0	motor off
23	1	Blocking current threshold	0 - 800 % * Set current, step: 5 %	800 %	160	motor off
24	1	Fault output	Off (0), On (1), Blink (3)	Off	0	motor off
25	1	Number of trips	0 - 255, step: 1	0	0	(read only)
26	1	Address check	Off (0), On (1)	Off	0	power up
27	1	reserved	always Off (0)	Off	0	-

[1)]: but only when the internal fault bit is not set.

5.3.3 Transfer of the complete parameter set in one block

Wrd No.	Byt No.	Parameter name	Byte weight	Definition / Range	Default value	Default (digital)	take-over after [1]
0	0	Set current 1	high	0.24-3200.00 A, step: 0.01 A	0.5 A	50	motor off
	1						
1	2		low				
	3						
2	4	Current factor	high	100-64000 %, step: 1 %	1	100 [2]	motor off
	5		low				
3	6	Set current 2	high	0.24-3200.00 A, step: 0.01 A	0.5 A	50	motor off
	7						
4	8		low				
	9						
5	10	Trip class		Class 5, Class 10, Class 20, Class 30 (Value 0, 1, 2, 3)	Class 10	1	motor off
	11	DI0 Multi-function input		000 to 048	Transparent	000	motor off
6	12	Phase loss protection		Off (0), On (1), (2), (3), (4), (5), (6), (7)	On	1	motor off
		Please read the safety remark in subsection 5.3.4!					
	13	DI1 Multi-function input		000 to 048	Transparent	000	motor off
7	14	Low current threshold		50-100 % * Set current, step: 5 %	50 %	10	motor off
	15	High current threshold		100-800 % * Set current, step: 5 %	150 %	30	motor off
8	16	Cooling time	high	30-3600 s, step: 0.1 s	120 s	1200	motor off
	17		low				
9	18	Automatic fault reset		Disabled (0), Autoreset (1)	Disabled	0	motor off
	19	Control function		Transparent (1), Overload relay (2), Direct starter (3), ...	Transparent	1	motor off[3]
10	20	Check-back		Auxiliary contacts (1), Motor current (2), Simulation (3)	Motor current	2	motor off
	21	Start-up time	high	0-600 s, step: 0.1 s	120 s	1200	motor off
11	22		low				
	23	Star-delta changeover mode		Time (0), Current (1)	Current	1	motor off
12	24	Star-delta starting time	high	1-3600 s, step: 0.1 s	60 s	600	motor off
	25		low				
13	26	Reverse lock-out time	high	0.2-3600 s, step: 0.1 s	2 s	20	motor off
	27		low				
14	28	reserved		-		-	-
	29	reserved		-		-	-

[1]: but only when the internal fault bit is not set.
[2]: 1 is also regarded as 100 % due to the compatibility to older configuration files (.GSD, .EDS...)
[3]: Only the control function Overload Relay requires a power cycle to become active.

5.3.3 Transfer of the complete parameter set in one block (continued)

Wrd No.	Byt No.	Parameter name	Byte weight	Definition / Range	Default value	Default (digital)	take-over after [1]
15	30	reserved		-		-	-
	31	reserved		always Off (0)	Off	0	-
16	32	reserved		-	-	-	-
	33	reserved		-	-	-	-
17	34	reserved		-	-	-	-
	35	reserved		-	-	-	-
18	36	Address check		Off (0), On (1)	Off	0	power up
	37	Bus fault reaction		Relays off (0), Outputs retain status (1)	Relays off	0	motor off
19	38	DI2 Multi-function input		000 to 089	Transparent	000	motor off
	39	Local control		Off (0), On (1), 002 (2), 003 (3), 004 (4), 005 (5)	Off	0	motor off
20	40	Blocking current threshold		0-800 % * Set, current, step: 5 %	800 %	160	motor off
	41	Fault output		Off (0), On (1), blink (2)	Off	0	motor off

[1]: but only when the internal fault bit is not set.

5.3.4 Parameter - Details in alphabetical order

Parameter name / Parameter number	Remark		
	Parameter value		Description of parameter values
	Control system (digital value if	**Control Panel**	

Address	Accessible only via Control Panel (menu point: Addr) or Addressing Set CAS21-FBP! Enter slave address.		
	-	*	Entering "999" results in "A---" = no valid address * Range depends on the fieldbus type

Address check 26	Accessible only via control system! Details see chapter 3.3.2.		
	Off (0)	-	**Address check off (= default)**: UMC22 address is valid on fieldbus.
	On (1)	-	**Address check activated:** If the UMC22 and the FieldBusPlug contain different addresses the user must decide.

Automatic fault reset 11	Accessible via control system or Control Panel (menu point: A.rES)! Only for control function *Overload relay* due to safety considerations.		
	Disabled (0)	AroF	**Automatic fault reset off (= default):** Acknowledge via Control Panel or fieldbus necessary to reset fault. To switch on again, cooling time must be elapsed.
	Autoreset (1)	Aron	**Automatic fault reset activated**: Automatic reset of fault when fault condition is off and cooling time has elapsed. Fault is not monitored.

Blocking current threshold 23	Accessible only via control system!		
	0-795 % (0-159)	-	**Blocking protection aktivated:** 0-795 % x Set current (step: 5 %): 795 % = 5 % x 159 Fault signal when start-up time has elapsed and then current is above threshold for > 1 s. **Remark:** Blocking sets the internal fault signal and the monitoring telegram bit OVERLOAD and displays trip on the Control Panel. The cooling time is not started.
	800 % (160)	-	**Blocking protection off (= default):** 800 % x Set current (step: 5 %): 800 % = 5 % x 160 Blocking protection is inactive.

5.3.4 Parameter - Details in alphabetical order (continued)

Parameter name / Parameter number	Remark		
	Parameter value		Description of parameter values
	Control system (digital value if	**Control Panel**	

Bus connection	Accessible only via Control Panel (menu point: bu.co)! Not a parameter, only for stand alone operation without fieldbus. Allows to use the UMC22 without FieldBusPlug, e.g. as Overload relay. Set and reset only via Control Panel.		
	-	bu.oF	**Stand alone operation:** Stand alone operation without fieldbus, controlled by digital inputs and Control Panel
	-	bu.on	**Connected to the fieldbus (= default):** Can be controlled via fieldbus, via digital inputs or via Control Panel.

Bus fault reaction 20	Accessible via control system or Control Panel (menu point: bu.Fr)! All cases when UMC22 does not receive valid telegrams, either when control system or fieldbus or FieldBusPlug is out of order or interrupted.		
	Relays off (0)	b.oFF	**Relays off (= default)**: Relay outputs of UMC22 will be switched off if a bus fault occurs.
	Outputs retain status (1)	b.rEt	**Outputs retain status**: According to the control function the relay outputs of UMC22 which are used for motor control the retain their status if a bus fault occurs. For *Transparent mode* this means that all 3 relays de-energize.

Change password	Only accessible via Control Panel (menu point: PnEu)!		
	-	0001-9999	

5.3.4 Parameter - Details in alphabetical order (continued)

Parameter name / Parameter number	**Remark**		
	Parameter value		**Description of parameter values**
	Control system (digital value if	**Control Panel**	
Check-back 13	Accessible via control system or Control Panel (menu point: bA.ch)!		
	Auxiliary contacts (1)	bA.Au	**Check-back via auxiliary contacts**: Check-back OK, when auxiliary contacts are closed 300 ms after start
	Motor current (2)	bA.Cu	**Check-back via motor current (= default)**: Check-back OK, when current > 40 % of Set current is present 300 ms after start
	Simulation (3)	bA.Si	**Simulated check-back**: Check-back is simulated (e.g. for test without motor). **Remark:** Simulation is recommended only to be set via Control Panel, the control system must only set Auxiliary contacts or Motor current to guarantee for an operating check-back after next power on.

5.3.4 Parameter - Details in alphabetical order (continued)

Parameter name / Parameter number	Remark		
	Parameter value		Description of parameter values
	Control system (digital value if	**Control Panel**	
Control function 12	Accessible via control system or Control Panel (menu point: co.Fu)!		
	Transparent (1)	c.trA	**Control function Transparent (= default)**: Direct access to DIs / DOs via fieldbus
	Overload relay (2)	c.oVL	**Control function Overload relay**: Similar to overload relay. **Attention!** Normal signal on output DO0 is on and the connected contactor starts the motor.
	Direct starter (3)	c.dir	**Control function Direct starter**: Direct start of a motor for one direction of rotation
	Reversing starter (4)	c.reV	**Control function Reversing starter**: Reverse start of a motor for two direction of rotation
	Star-delta starter 1 (5)	c.Sd1	**Control function Star-delta starter 1**: Star-delta start via 2 DOs
	Pole-changing starter 1 (6)	c.Pch	**Control function Pole-changing starter 1**: Pole-changing start for two-pole and dahlander motors
	Actuator 1 (7)	c.Ac1	**Control function Actuator 1**: OPEN and CLOSE Position via limit switch
	Actuator 2 (8)	c.Ac2	**Control function Actuator 2**: OPEN and CLOSE Position via limit and torque switch
	Actuator 3 (9)	c.Ac3	**Control function Actuator 3**: OPEN Position via limit switch, CLOSE Position via limit and torque switch
	Actuator 4 (10)	c.Ac4	**Control function Actuator 4**: OPEN Position via limit and torque switch, CLOSE Position via limit switch
	Star-delta starter 2 (11)	c.Sd2	**Control function Star-delta starter 2**: Star-delta start via 3 DOs

5.3.4 Parameter - Details in alphabetical order (continued)

Parameter name / Parameter number	Remark		
	Parameter value		Description of parameter values
	Control system (digital value if	**Control Panel**	

Cooling time 10	Accessible via control system or Control Panel (menu point: ti.co)! Cooling time simulates the cooling behaviour of the inoperating motor after tripping. **Remark:** During cooling time is running, RUN commands are not accepted. WARNING is monitored.		
	30-3600 s (300-36000)	0030- 3600	**30-3600 s** Steps via control system: 0.1 s: 30 s = 0,1 s x 300 Steps via Control Panel: 1 s: 30 s = 1 s x 30 Default value: 1200 resp. 0120 (=120 s)

Current factor 02	Accessible via control system or Control Panel (menu point: cu.FA)! **Remark:** The UMC2 measures the currents of the lines in the bushing holes √ 3 wiring and/or an external current transformer result in a higher power line current. If the Set current shall include the current factor to show e.g. the real rated motor current the current factor must be changed before or together with the set current (3.2.3 and 3.2.4).		
	1 or 100	001.0	**Current factor = 1 → Current range 0.24-63 A (= default)**: ▶ Adjustment via control system: 1 or 100 Both values are identified as current factor 1 = 100 %. If 1 or 100 has to be set, depends on the version of the configuration file (.GSD, .EDS, ...) ▶ Adjustment via Control Panel: 001.0
	1,73 (173)	001.7	**Current factor = 1.73 → Current range 0.4-109 A**: (needed for √3 circuits) ▶ Adjustment via control system: 173 Value 173 corresponds with current factor 1.73 = 173 % ▶ Adjustment via Control Panel: 001.7 Value 1.7 is internally corrected to 1.73 = 173 %
	10-640 (1000- 64000)	10.00- 640.0	**Current factor = 10-640 → Current range 50-3200 A**: (for circuits with external current transformers) ▶ Adjustment via control system: 1000 - 64000 Value 1000 corresponds to current factor 10 = 1000 %, ... Value 64000 corresponds to current factor 640 = 64000 %, ... ▶ Adjustment via Control Panel: 010.0 - 640.0

5.3.4 Parameter - Details in alphabetical order (continued)

Parameter name / Parameter number	Remark		
	Parameter value		Description of parameter values
	Control system (digital value if	**Control Panel**	

DI0, DI1, DI2 Multi-function input 05 / 07 / 21 **Remark:** This settings do not influence the protection of the motor	Multi-function inputs offer additional possibilities to survey the motor and the production process it is used for. Via the parameters *DI0 Multi-function input*, *DI1 Multi-function input* and *DI2 Multi-function input* the inputs DI0, DI1 and DI2 can be parameterized as multi-function inputs with the following functions: ▶ *Transparent* (default): status is monitored only to the fieldbus ▶ *Fault signal always / not delayed or delayed* with 1 to 255 s: The delay time starts whether the motor is running or not. ▶ *Fault signal dependent / delayed* with 1 to 255 s: The delay time starts only when the motor is running. ▶ *Motor off always / not delayed or delayed* with 1 to 255 s: The delay time starts whether the motor is running or not. ▶ *Motor off dependent / delayed* with 1 to 255 s: The delay time starts only when the motor is running. ▶ *Reset internal fault signal* ▶ *Test* → Start without motor (no current check-back when started)

5.3.4 Parameter - Details in alphabetical order (continued)

Parameter name / Parameter number	Remark		
	Parameter value		Description of parameter values
	Control system (digital value if	Control Panel	

DI0, DI1, DI2 Multi-function input
05 / 07 / 21
(continued)

Remark:
This settings do not influence the protection of the motor

Remark:

- ▶ DI0, DI1 and DI2 can be parametrized via fieldbus. Only DI2 can be parametrized via Control Panel.
- ▶ DI0: *Check-back* = *Auxiliary contacts* is dominating against *Multi-function input*.
- ▶ DI0: can not be parameterized as *Fault signal always / not delayed* (reason: compatibility to older versions)

Control system	Control Panel	Description of parameter values
000	P.000	**Transparent (= default)** Input status is monitored only to the fieldbus. (correspondes to former parameter Fault input DI2 = Off)
001 [1], 010 - 018	P.001 [1], P.010 - P.018	**Fault signal always / not delayed or delayed** DIx = 1: fault free status DIx → 0: Starts the delay time whether the motor is running or not. When delay time has elapsed the internal fault signal is set und the motor is stopped. RUN commands will be only accepted when the fault has been reset. Reset of fault is only possible if DIx = 1 again.

Remark:

DI0: Due to compatibility reasons - new UMC22 versions as replacement in existing installations - DI0 = 1 is ignored and replaced by DI0 = 0.

Compatibility problems of the UMC22 Versions 3.2 consult 1.7.

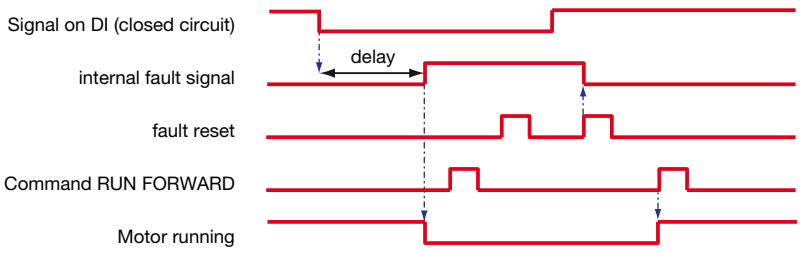

Parameter value	Delay time	Parameter value	Delay time
001 resp. P.001	0 s	014 resp. P.014	16 s
010 resp. P.010	1 s	015 resp. P.015	32 s
011 resp. P.011	2 s	016 resp. P.016	64 s
012 resp. P.012	4 s	017 resp. P.017	128 s
013 resp. P.013	8 s	018 resp. P.018	255 s

[1] For DI2 compatible to the former Parameter "Fault input".

5.3.4 Parameter - Details in alphabetical order (continued)

Parameter name / Parameter number	Remark: Parameter value: Control system (digital value if	Remark: Parameter value: Control Panel	Description of parameter values

DI0, DI1, DI2 Multi-function input (continued) 05 / 07 / 21

Remark:
This settings do not influence the protection of the motor

002, 020 - 028 | P.002, P.022 - P.028

Motor off always / undelayed or delayed
DIx = 1: Motor start is released, not stopped

DIx → 0: Starts the delay time whether the motor is running or not. When delay time has elapsed the motor is stopped. The internal fault signal is not (!) set.
RUN commands will be only accepted when DIx = 1 again.

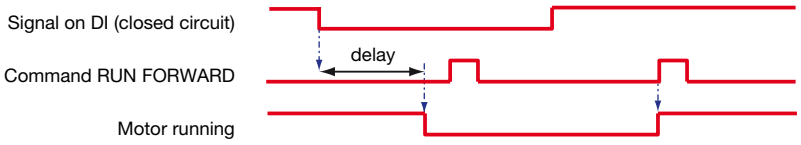

Parameter value	Delay time	Parameter value	Delay time
002 resp. P.002	0 s	024 resp. P.024	16 s
020 resp. P.020	1 s	025 resp. P.025	32 s
021 resp. P.021	2 s	026 resp. P.026	64 s
022 resp. P.022	4 s	027 resp. P.027	128 s
023 resp. P.023	8 s	028 resp. P.028	255 s

030 - 038 | P.030 - P.038

Fault signal dependent / delayed
DIx = 1: fault free status

DIx → 0: Starts the delay time but only if the motor is running or is started. When delay time has elapsed the internal fault signal is set und the motor is stopped.
RUN commands will be only accepted when the fault has been reset. Reset of fault is only possible if DIx = 1 again.

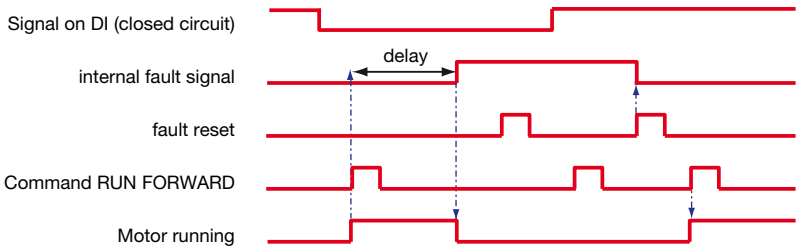

Parameter value	Delay time	Parameter value	Delay time
		034 resp. P.034	16 s
030 resp. P.030	1 s	035 resp. P.035	32 s
031 resp. P.031	2 s	036 resp. P.036	64 s
032 resp. P.032	4 s	037 resp. P.037	128 s
033 resp. P.033	8 s	038 resp. P.038	255 s

5.3.4 Parameter - Details in alphabetical order (continued)

Parameter name / Parameter number	Remark: Parameter value: Control system (digital value if	Remark: Parameter value: Control Panel	Remark: Description of parameter values
DI0, DI1, DI2 Multi-function input (continued) 05 / 07 / 21	040 - 048	P.040 - P.048	**Motor off dependent / delayed** DIx = 1: Motor start is not stopped DIx → 0: Starts the delay time but only if the motor is running or when it is started. If the fault is still present when delay time has elapsed the motor is stopped. The internal fault signal is not (!) set. RUN commands will be only accepted when DIx = 1 again. 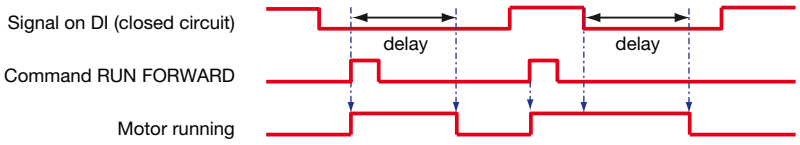 Parameter value / Delay time / Parameter value / Delay time 044 resp. P.044 / 16 s 040 resp. P.040 / 1 s / 045 resp. P.045 / 32 s 041 resp. P.041 / 2 s / 046 resp. P.046 / 64 s 042 resp. P.042 / 4 s / 047 resp. P.047 / 128 s 043 resp. P.043 / 8 s / 048 resp. P.048 / 255 s
Remark: This settings do not influence the protection of the motor	007	P.007	**Reset of internal fault signal** 1 signal at one of the inputs DI0, DI1 or DI2 resets the internal fault signal, provided that the cause of fault is repaired and the fault reason is not longer present.
	008	P.008	**Test** 1 signal at one of the inputs DI0, DI1 or DI2 simulates check-back "everything's OK". The motor can be controlled independend of any check-back (sometimes called Test input particularely for drawer systems). This setting corresponds to parameter *Check-back* = *Simulation*. For safety reasons it should be set via Control Panel only.
	003 - 006, 009, 019, 029, 039, 049	P.003 - P006, P.009, P.019, P.029, P.039, P.049	reserved

5.3.4 Parameter - Details in alphabetical order (continued)

Parameter name / Parameter number	Remark: Parameter value: Control system (digital value if	Parameter value: Control Panel	Description of parameter values
DI2 Multi-function input 21	050 - 089	P.050 - P.089	**Earth fault monitoring** Earth fault monitoring offers the following possibilities (Bits):
	080 - 089	P.080 - P.089	**Earth fault monitoring (Trip + Warning + Star-up inhibit)**
	060 - 069	P.060 - P.069	**Earth fault monitoring (Trip + Warning)**
	070 - 079	P.070 - P.079	**Earth fault monitoring (Warning + Star-up inhibit)**
	050 - 059	P.050 - P.059	**Earth fault monitoring (Warning)**

Remark:
This settings do not influence the protection of the motor

Parameter value	Delay time	Parameter value	Delay time
080 or P.080	1 s	084 or P.084	16 s
081 or P.081	2 s	085-089 or P.085-P.089	25 s
082 or P.082	4 s		
083 or P.083	8 s		

Parameter value	Delay time	Parameter value	Delay time
060 or P.060	1 s	064 or P.064	16 s
061 or P.061	2 s	065-069 or P.065-P.069	25 s
062 or P.062	4 s		
083 or P.063	8 s		

Parameter value	Delay time	Parameter value	Delay time
070 or P.070	1 s	074 or P.074	16 s
071 or P.071	2 s	075-079 or P.075-P.079	25 s
072 or P.072	4 s		
073 or P.073	8 s		

Parameter value	Delay time	Parameter value	Delay time
050 or P.050	1 s	054 or P.054	16 s
051 or P.051	2 s	055-059 or P.055-P.059	25 s
052 or P.052	4 s		
053 or P.053	8 s		

Fault output 24	Accessible via control system or Control Panel (menu point: F.out)!		
	Off (0)	Fo.of	**Fault output not activated (= default):** Output DO2 is free available..
	On (1)	Fo.on	**Fault output activated / light steady** Output DO2 is used for fault indication.
	Blink (3)	Fo.bl	**Fault output activated /flashing** Output DO2 is used for fault indication.

6.3.4 Parameter - Details in alphabetical order (continued)

Parameter name / Parameter number	Remark		
	Parameter value		Description of parameter values
	Control system (digital value if	**Control Panel**	

High current threshold 09	Accessible via control system only!		
	100-800 % (20-160)	-	**100-800 % x Set current** (step: 5 %): 100 % = 5 % x 20 Warning when motor current is above threshold after start-up time has elapsed. Default value: 30 (= 150 %)

Local control 22	Accessible via control system or Control Panel (menu point: L.ctr)! Local control is possible on various ways: - **Local operation via digital inputs** - adjustable via *Local control* - **Direct panel control** for simplified operation with the Control Panel - adjustable via *Local control* - **Password panel control** - password protected but always possible (not regarded here, see 9). **Remark:** Direct panel control and local control via digital inputs are only active when the control station sends AUTO MODE = 0. Details see chapters 3.4.		
	Off (0)	Lc.cF	**Off**: no local operation **(= default)** - Local operation via DIs: DI3*, DI4 and DI5 not used, free available - Direct panel control: not active
	On (1)	Lc.co	**On** - Local operation via DIs only (1): - Local operation via DIs: DI3* and DI4 active signal, pulse and DI5 closed circuit signal, pulse - Direct panel control: not active
	002 (2)	L.002	**002** - Local operation via DIs only (2): - Local operation via DIs: DI3*, DI4 and DI5 active signal, pulse - Direct panel control: not active
	003 (3)	L.003	**003** - Local operation via DIs (1) and Direct panel control: - Local operation via DIs: DI3* and DI4 active signal, pulse and DI5 closed circuit signal, pulse - Direct panel control: actived
	004 (4)	L.004	**004** - Local operation via DIs (2) and Direct panel control: - Local operation via DIs: DI3*, DI4 and DI5 active signal, pulse - Direct panel control: actived
	005 (5)	L.005	**005** - Direct panel control only: - Local operation via DIs: DI3*, DI4 and DI5 not used, free available - Direct panel control: actived
	* DI3 is only used for the control functions *Reversing starter*, *Pole-changing starter* and *Actuator 1-4*.		

5.3.4 Parameter - Details in alphabetical order (continued)

Parameter name / Parameter number	Remark		
	Parameter value		Description of parameter values
	Control system (digital value if	**Control Panel**	

Low current threshold 08	Accessible via control system only!		
	5-100 % (1-20)	-	**5-100 % x Set current** (step: 5 %): 5 % = 5 % x1 Warning when motor current is below threshold and start-up time has elapsed. Default vaule: 10 (= 50 %)

Multi-function input 05 / 07 / 21	see DI0, DI1, DI2 Multi-function input

Number of starts 19	Switching cycle counter Control system can only read the value - supposed the fieldbus can transmit the value. Change value is only possible via Control Panel (menu point: noSt)!		
	0-1'000'000	0000-1000	**Remark:** All starts are counted but the last 3 digit positions are not displayed on the Control Panel. The displayed range of 0000 - 1000 corresponds with 0 - 1.000.000.

Number of trips 25	Control system can only read the value - supposed the fieldbus can transmit the value. Change value is only possible via Control Panel (menu point: notr)!		
	0-255	0000-0255	**Remark:** All trips are counted and displayed on the Control Panel.

Operating hours of motor 18	Control system can only read the value - supposed the fieldbus can transmit the value. Change value is only possible via Control Panel (menu point: oPho)!		
	0-65'535	00.00-65.53	**Remark:** All hours are counted but the last digit position is not displayed on the Control Panel. The displayed range of 00.00 - 65.53 corresponds with 0 - 65.535.

Parameter lock	Accessible via Control Panel (menu point: PA.Lo) only! Locks writing the parameters via control system / fieldbus and via Control Panel.		
	-	P.EnA	**Parameter enabled (= default)**: Parameter lock is not activated: Writing of parameters enabled
	-	P.Loc	**Parameter locked**: Parameter lock is activated: Writing of parameters locked

5.3.4 Parameter - Details in alphabetical order (continued)

Parameter name / Parameter number	**Remark**		
	Parameter value		**Description of parameter values**
	Control system (digital value if	**Control Panel**	

Parameter transfer	Accessible via Control Panel (menu point: PA.tr) only! All parameter information - exept the Slave address, Operation hours, Number of starts and Number of trips - can be read out from or written into the UMC22 by the Control Panel.		
	-	PA.rE	**Read parameters**: Control Panel reads out all parameter information from an UMC22.
	-	PA.SE	**Set parameters**: Control Panel overwrites all parameter information in the UMC22.

Password	Accessible via Control Panel (menu point: PASS) only! Will be skipped - direct to the next menu point - if the default password has not been changed before.		
	-	0001-9999	

5.3.4 Parameter - Details in alphabetical order (continued)

Parameter name / Parameter number	Remark		
	Parameter value		Description of parameter values
	Control system (digital value if	Control Panel	

Phase loss protection 06	**Phase loss protection / PTC fault protection** (3.6) Accessible via control system or Control Panel (menu point: PH.LP)! **Safety remark!** The UMC22 is designed for 3-phase loads and therefore calculates internally with trip curves as they are used for 3-phase loads. If a phase loss appears without active phase loss protection trip time is elongated. With software version 3.5 it is not possible to switch off phase loss protection (see chapter 4.3.7). Phase loss / PTC protection offers the following possibilities (Bits): 0000.0x-- PTC warning / PTC trip x = 0: PTC warning / x = 1: PTC trip / -: any PTC warning: A warning is issued in case of PTC sensor's resistance transitions from a low to high value. The Warning disappears automatically after temperature is low. PTC trip: A warning and trip (stop motor) is issued in case of PTC sensor's resistance transitions from a low to high value. The Warning dissapears automatically after temperature is low and PTC sensors's resistance transitions from a high to low value. The fault (trip) disappear after fault reset. 0000.0-x- PTC protection x = 0: not active / x = 1: active / -: any 0000.0--x 000.0--x Phase loss protection x = 0: not active / x = 1: active / -: any with software version 3.5 it is always activated and can not be switched off (see chapter 4.3.7) Assumption for phase loss protection: The motor current has to be minimum 70 % of the rated current in fault free status. In case of phase unbalance or phase loss, the difference between the highest and the lowest phase current mustbe ≥ 50 % to trip. A phase loss also starts the Cooling time.		
	Off (0)	PH.oF	**Phase loss protection active** (can not be switched off with software version 3.5)/ **PTC protection not active (0000.0000)**
	On (1)	PH.on	**Phase loss protection active /** **PTC protection not active (0000.0001) (=default)**
	Off+PTC Warn (2)	PH. 2	**Phase loss protection active** (can not be switched off with software version 3.5)/ **PTC protection active mit PTC warning (0000.0010)**
	On+PTC Warn (3)	PH. 3	**Phase loss protection active /** **PTC protection active mit PTC warning (0000.0011)**
	004 (4)	PH. 4	**Phase loss protection active** (can not be switched off with software version 3.5)/ **PTC protection not active (0000.0100)** PTC trip activated, not executed, because PTC protection is not active.
	005 (5)	PH. 5	**Phase loss protection active /** **PTC protection not active (0000.0101)** PTC trip activated, not executed, because PTC protection is not active.
	Off+PTC Trip (6)	PH. 6	**Phase loss protection active** (can not be switched off with software version 3.5)/ **PTC protection active mit PTC trip (0000.0110)**
	On+PTC Trip (7)	PH. 7	**Phase loss protection active /** **PTC protection active mit PTC trip (0000.0111)**

5.3.4 Parameter - Details in alphabetical order (continued)

Parameter name / Parameter number	Remark		
	Parameter value		Description of parameter values
	Control system (digital value if	Control Panel	

Reset to de-fault	Accessible via Control Panel (menu point: rESE) only! Sets all parameter values to default values exept the parameters address, number of starts, number of trips and operating hours.

Reverse lock-out time 17	Accessible via control system or Control Panel (menu point: ti.rL)! Only for bidirectional starters! Time starts running with the OFF command. An Off command is nessesary between run forward and reverse, that means between RUN FORWARD and RUN REVERSE command. A RUN command into the other direction will be acepted only when the reverse lock-out time has elapsed.		
	2-36000	0002-3600	**0.2-3600 s** - Adjustment via control system: step: 0.1 s: 0.2 s = 0.1 s x 2 - Adjustment via Control Panel: step: 1 s: 2 s = 1 s x 2 A "0" set with the Control Panel corresponds to 0.2 s. Default value: 20 resp. 0002 (= 2 s)

Self test (Overload)	Accessible via Control Panel (menu point: SELF) only! Tests different functions, creates an overload and checks the correct trip time. Start self test with [ENTER]. The display "buSY" on the Control Panel shows the correct test run. Self test is OK if no fault signal is set after the test. **Attention!** Starting the Self Test (Overload) sets the thermal mempry to zero. This means a warmed up motor is not protected correctly, if immediately started after Self test.

5.3.4 Parameter - Details in alphabetical order (continued)

Parameter name / Parameter number	Remark		
	Parameter value		Description of parameter values
	Control system (digital value if	**Control Panel**	

Set current 1 01	Accessible via control system or Control Panel (menu point: Cur1)! **Remark:** If the parameter Current factor shall be higher than 100% - referring to 1.00 - it should be sent before or together with the changed Set current. The UMC22 divides the Set current by the Current factor. When the RUN signal appears and the result is higher than 63 A the RUN signal will be ignored and the internal fault signal will be set (parameter out of range).		
	24-6300	00.24-63.00	**0.24-63 A** (step: 0.01 A): 0.24 A = 0.01 A x 24 at current factor = 1 (default)
	42-109	00.42-109.0	**0.42-109 A** (step: 0.01 A): 0.42 A = 0.01 A x 42 at current factor = 1.73 (for √3 circuits)
	5000-32000	0050-3200	**1-3200 A** (step: 0.01 A): 50 A = 0.01 A x 500 at current factor > 10 (for circuits with external current transformers with secundary currents of approx. 5 A)

Set current 2 03	Accessible via control system or Control Panel (menu point: Cur2)! **Remark:** Only for Pole-changing and (two-pole Dahlander) starter!		
	24-6300	00.24-63.00	**0.24-63 A** (step: 0.01 A): 0.24 A = 0.01 A x 24 at current factor = 1 (default)
	42-10900	00.42-109.0	**0.42-109 A** (step: 0.01 A): 0.42 A = 0.01 A x 42 at current factor = 1.73 (for √3 circuits)
	5000-320000	0050-3200	**1-3200 A** (step: 0.01 A): 50 A = 0.01 A x 500 at current factor > 10 (for circuits with external current transformers with secundary currents of approx 5 A)

5.3.4 Parameter - Details in alphabetical order (continued)

Parameter name / Parameter number	**Remark**		
	Parameter value		**Description of parameter values**
	Control system (digital value if	**Control Panel**	
Star-delta changeover mode (Start surveying time) 15	Accessible via control system or Control Panel (menu point: Sd.ch (Edi.2))! **Star-delta changeover mode for star-delta starter 1:** defines when the UMC22 switches from star to delta. **Start surveying time for actuator 1-4:** defines whether the *Start surveying time* is prolonged or not.		
	Time (0)	Sd.ti	**Time**: For star-delta starter 1: Change from star to delta, when star-delta starting time is over For actuator 1-4: Start surveying time fixed = 3 s
	Current (1)	Sd.cu	**Current (= default)**: For star-delta starter 1: Change from star to delta, when motor current ≤ 0,9 x *Set current 1* **Remark:** Current check-back fault is generated if the *Star-delta starting time* has elapsed before switching to delta. For actuator 1-4: Start surveying time adjustable = 3 s + 12.5 % of the parameter *Run-time limit (Star-delta starting time).*

Star-delta starting time (Run-time limit) 16	Accessible via control system or Control Panel (menu point: ti.Sd (Edi.1))! **Star-delta starting time for star-delta starter 1:** defines the time when the UMC22 switches from star to delta or defines the surveying time **Run-time limit for actuator 1-4:** defines the prolongation of the *Start surveying time*		
	1-3600 s (10-36000)	0001-3600	**1-3600 s**: Adjustment via control system: step: 0.1 s: 1 s = 0.1 s x 10 Adjustment via Control Panel: step: 1 s: 1 s = 1 s x 1 Default value: 600 resp. 0060 (= 60 s)

Start-up time 14	Accessible via control system only! Suppresses Blocking / High current threshold / Low current threshold signals until motor is in normal running status.		
	0-600 s (0-6000)	-	**0-600 s** (step: 0.1 s): 600 s = 0.1 s x 6000 Default value: 1200 (=120 s)

5.3.4 Parameter - Details in alphabetical order (continued)

Parameter name / Parameter number	**Remark**		
	Parameter value		**Description of parameter values**
	Control system (digital value if	**Control Panel**	

Trip class 04	Accessible via control system or Control Panel (menu point: triP)! Overload calculation (thermal memory)		
	Class 5	tr05	**Trip class 5**
	Class 10	tr10	**Trip class 10 (= default)**
	Class 20	tr20	**Trip class 20**
	Class 30	tr30	**Trip class 30**

6. Technical data

6.1 Main power lines

Voltage (three-phase systems)		max. 690 V AC
Conductor holes in the current transformers		max. 25 mm² (max. diameter incl. insulation 11 mm)
Set current range for overload protection	UMC22 alone	0.24-63 A
	UMC22 with provided current transformer (see chapter 7).	50-850 A
Overload protection for three-phase motors		acc. to EN/IEC 60947-4-1
Trip classes, selectable by parameter		5, 10, 20, 30 (acc. to EN/IEC 60947-4-1)

Tripping time for cold motor for 3-phase symmetrical loads

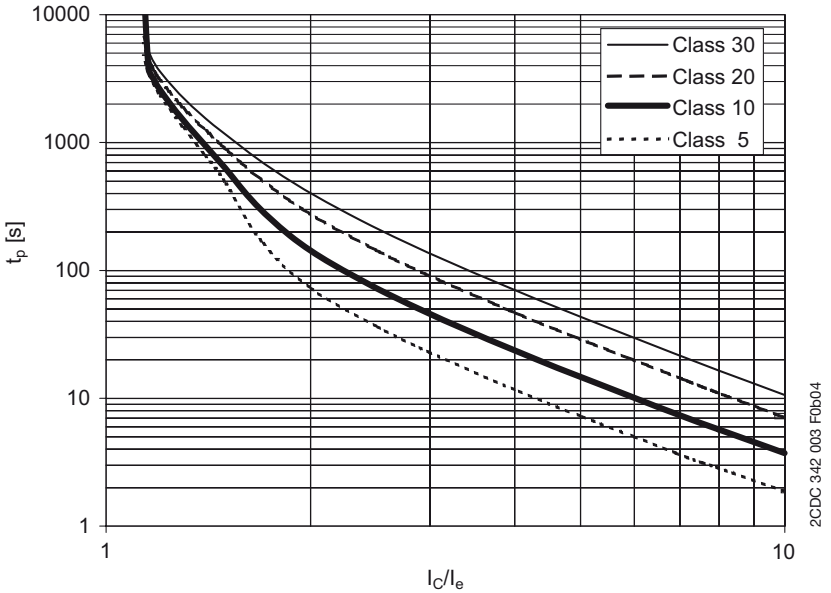

Tripping time for warm motor for 3-phase symmetrical loads
(motor current I_c/I_e = 100 % for long time before overloading)

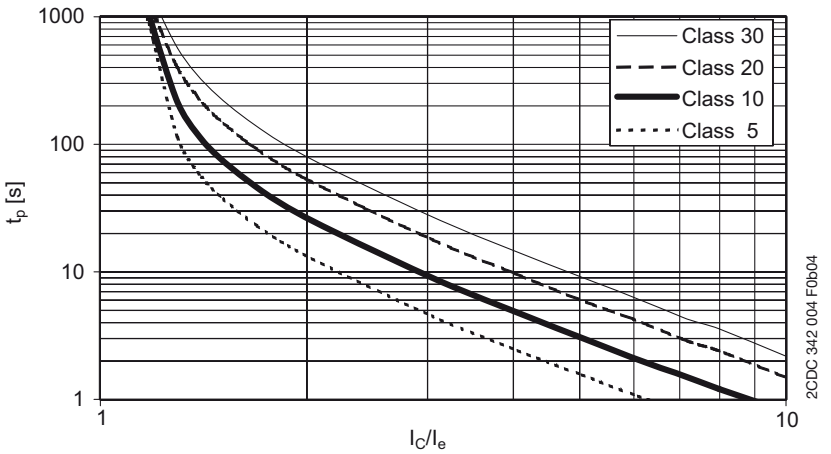

6.1 Main power lines (continued)

Tolerance of tripping time (incl. total ranges of current, temperature 0-55°C, frequency 45-65 Hz)	UMC22 alone		+/- 10 %
	UMC22 with provided current transformer (see chapter 7)		+/- 14 %
Phase loss protection: phase loss is detected (fault is signalled)			If the difference between the highest and the lowest phase current is ≥ 50 %. **Attention!** The phase loss protection operates correctly only when (in fault free state) the motor current is 70% of the rated current.
Tripping time for phase loss	Trip class	5	approx. 1.5 s
		10	approx. 3 s
		20	approx. 6 s
		30	approx. 9 s
Cooling simulation			After tripping the thermal memory calculates the reduction of the motor temperature (independend of the parameter *Cooling time*)
	internal cooling time constant		approx. 20 min
	if UMC22 is not longer supplied		Calculation continues for some minutes (typ. 20 min.)
Cooling time (parameter)			An appropriate value need to be set (default = 120 s)
	The cooling time that need to be set depends on:		- Motor size of the motor: larger size → longer cooling time - After trip motor still rotating (driven) or standstill (without ventilation → longer cooling time) - Environment temperature: higher temperature → longer cooling time Regarding this situation the needed cooling time can be assumed. Some examples of motor cooling time constants (motor standstill) can help to calculate (motors for explosive atmospheres).
	Motor size: 1 kW 1-pole		Cooling time constant: 10 min
	Motor size: 5 kW 1-pole		Cooling time constant: 15 min
	Motor size: 5 kW 2-pole		Cooling time constant: 20 min
	Motor size: 20 kW 2-pole		Cooling time constant: 30 min
	Motor size: 20 kW 3-pole		Cooling time constant: 40 min
	Motor size: 100 kW 3-pole		Cooling time constant: 70 min
	After three times the of cooling time constant, the motor has nearly the environment temperature.		

6.1 Main power lines (continued)

Accuracy class of the monitored current (range 50 to 200 %)	UMC22-FBP alone	3%
	UMC22 with provided current transformer (7)	4%
Burden per phase		ca. 30 mΩ
Frequency range		45-65 Hz
Frequency converters		not allowed
Short-circuit protection		Provided by external SCPD (Short Circuit Protection Device), e.g. MO, MCB, MCCB or fuse. Refer also to ABB coordination tables (Internet).
Coordination tables, access via Internet		http://www.abbcontrol.fr/coordination_tables/TABLES5.asp
Cross section of lines		acc. to the rated motor current referring EN/IEC 60947-1 and for particular installation situation referring EN/IEC 60204 or VDE 298-4 resp.

6.2 Controller unit

Supply voltage mode		Internal or external see chapter 3.2.1
Supply voltage		24 V DC (+30...-20 %) (19.2 ... 31.2 V DC) including ripple
Supply current (incl. inputs, relays activated)		max. 160 mA
Total device dissipation		max. 3.7 W (at 24 V DC)
Reverse polarity protection		yes
Number of	digital inputs	6 (DI0 ... DI5)
	relay outputs	3 (DO0 ... DO2)
	PTC inputs	1 (T1-T2)
	bus interfaces	1 (for connecting an ABB FieldBusPlug)
	Control Panel interfaces	1 (to mount Control Panel UMC-PAN)
Internal signal processing of control function and other properties		Selectable by parameters, see chapters 8 and 9
Parameter Setting		via fieldbus, via Control Panel, see chapters 8 and 9
LEDs on the front	green	device ready for operation
	red	fault (trip, device fault etc.)
	yellow	motor current > 20 % of set current
Diagnosis		see chapter 5.2.1

6.3 Digital inputs

Number of digital inputs		6 (DI0 ... DI5)
Supply for digital inputs (terminal 12)		Internal or external see chapter 3.2.1
Supply output current for inputs (terminal 12)		max. 70 mA
Voltage when standard contacts are used		min.18 V
Isolation		no see chapter 3.2.1
Input signal bounce suppression		typ. 4ms
Signal 0 range including ripple		-31.2...+5 V
Signal 1 range including ripple		+13...+31.2 V
Input current per channel (24 V DC)		typ. 6.0 mA
Input resistor to 0 V		3.9 kΩ
Cable length	unshielded	max. 600 m
	shielded	max. 1000 m
Wire size (rigid or fine-strand)		0.2-2.5 mm² / 14-24 AWG
Tightening torque		0.4 Nm

6.4 Digital outputs

Number of digital outputs			3 (DO0 ... DO2)	
Type of digital outputs			relay contacts	
Grouping of contacts			3 contacts with 1 common	
Voltage range of contacts			12-250 V AC/DC	
Lowest switched power for correct signals			1 W or 1 VA	
Switching capacity per relay contact acc. to EN 60947-5-1	AC-15	240 V AC	max. 1,5 A	(electromagnetic load)
	AC-15	120 V AC	max. 3 A	(electromagnetic load)
	DC-13	250 V DC	max. 0,11 A	(electromagnetic load)
	DC-13	125 V DC	max. 0,22 A	(electromagnetic load)
	DC-13	24 V DC	max. 1 A	(electromagnetic load)
Total current all contacts (terminal 5 or 6)			max. 4 A(thermal limit)	
Short circuit protection			6 A gL / gG	
Switching of inductive power			Inductive loads need additional measures for spark suppression. Diodes for DC voltage and varistors / RC elements for AC voltage are suitable. Some DC coil contactors contain rectifiers which suppress sparks perfectly.	
Relay contact lifetime	mechanical		500 000 switching cycles	
	electrical (250 V AC)	0.5 A	100 000 switching cycles	
		1.5 A	50 000 switching cycles	
		with ABB contactors	see chapter 3.2.2	
Internal clearance and creepage distances relay contacts to 24 V circuits			> 5.5 mm (safety insulation up to 250 VAC) (EN 60947-1, Pollution degree 2)	

6.4 Digital outputs (continued)

Supply power down/up, behaviour: Valid for all motor controlling Control functions, but not for Transparent and Overload relay.	Whenever the supply voltage of the UMC22 is switched off and on, the start of the motor needs a new 0 to 1 transition of the RUN signal.

6.5 Thermistor motor protection (PTC - binary)

Broken wire resistance		> 5 kΩ
Response resistance		3.4-3.8 kΩ
Reset resistance		1.5-1.8 kΩ
Short-circuit trip resistance		< 15-27 Ω (incl. PTC connection wires)
Response time		800 ms
Max. cold resistance of PTC sensor chain		< 1.5 kΩ
Line lenght	2.5 mm²	2 x 250 m
	1.5 mm²	2 x 150 m
	0.5 mm²	2 x 50 m
Isolation		no

6.6 FieldBusPlug connection

Mounting		Plug connection, fastening with supplied screw
Tightening torque of the fixing screw		0.8 Nm + rotation 90 degree
Suitable ABB FieldBusPlug types for	PROFIBUS DP	PDP21-FBP, PDP22-FBP
	Devicenet	DNP21-FBP
	MODBUS	MRP21-FBP
	AS-Interface	ASP22-FBP

6.7 Environmental and mechanical data

Mounting		on DIN rail (EN 50022-35) or with 4 screws M4
Mounting position		no restrictions
Dimensions (W x H x D)		70 x 105 x 110 mm (incl. FieldBusPlug and Control Panel)
Netto weight		0.39 kg (current transformer + controller unit)
Wire size	terminals	max. 2.5 mm² or max. 2 x 1.5 mm²
Degree of protection		IP 20
Temperature range	storage	-25 ... +70 °C
	operation	0 ... +55 °C
Approvals		CE, UL, CSA, CCC, ATEX
Approvals (planned)		GL, BV, LRS

6.8 Dimensions

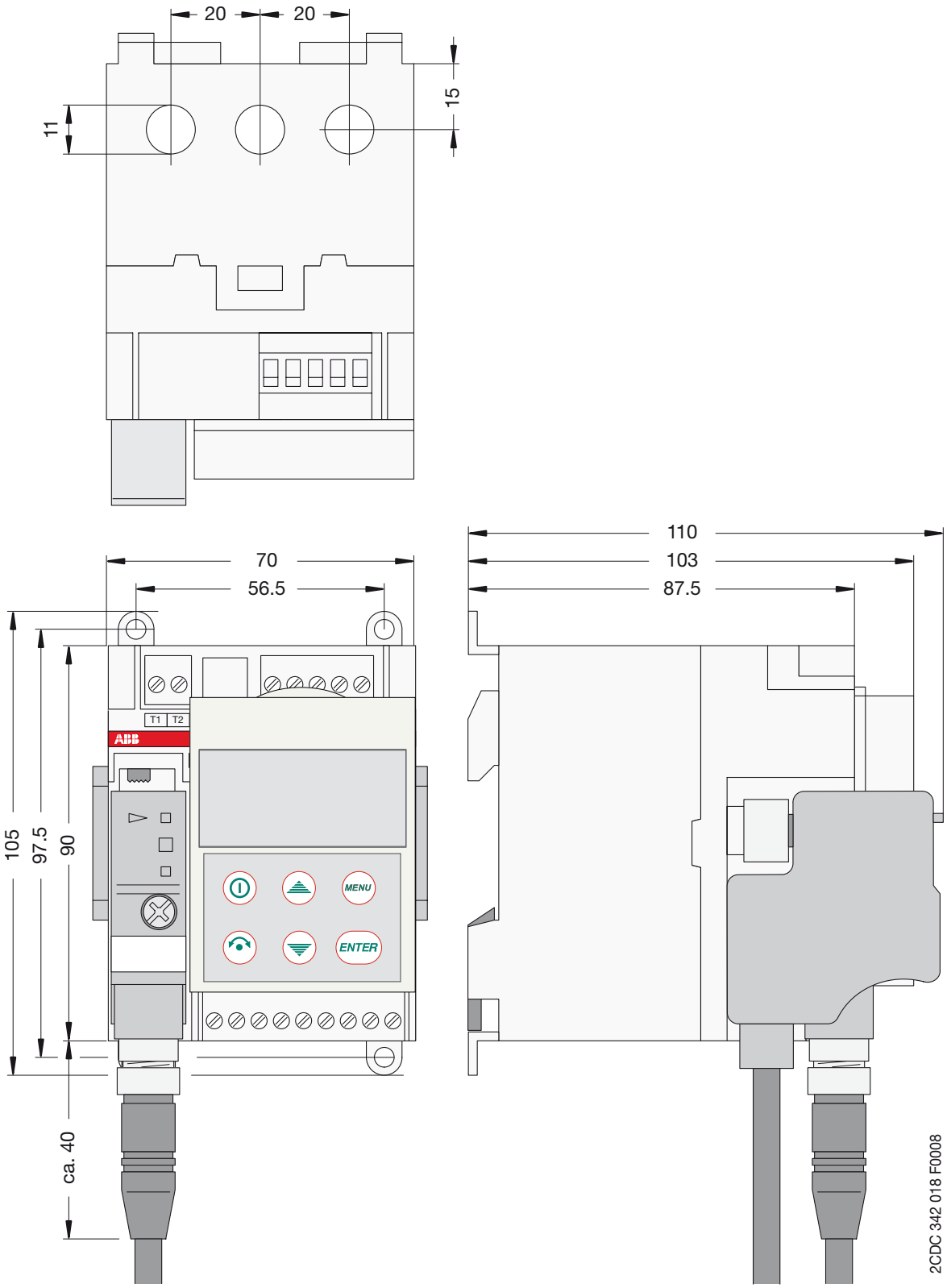

Fig. 6-1: Dimensions of UMC22-FBP

7. Ordering data

Description			Order code
Universal Motor Controller UMC22-FBP (ATEX)			1SAJ 510 000 R0500
Accessories (not in scope of delivery, to order separately)			
Control Panel UMC-PAN			1SAJ 510 001 R0001
Extension Cable UMC-CAB for Control Panel UMC-PAN		Cable length: 3.00 m	1SAJ 510 002 R0001
		Cable length: 0.50 m	1SAJ 510 003 R0001
Addressing-Set CAS21-FBP for PROFIBUS, DeviceNet, ...			1SAJ 929 003 R0001
FieldBusPlug types	PDP22-FBP (PROFIBUS DP)	Cable length: 0.25 m	1SAJ 240 100 R1003
		Cable length: 0.50 m	1SAJ 240 100 R1005
		Cable length: 1.00 m	1SAJ 240 100 R1010
		Cable length: 2.00 m	1SAJ 240 100 R1020
		Cable length: 5.00 m	1SAJ 240 100 R1050
	PDQ22-FBP (PROFIBUS DP)	4 x PROFIBUS DP FieldBusPlug	1SAJ 240 200 R0050
	DNP21-FBP (DeviceNet)	Cable length: 0.25 m	1SAJ 230 000 R1003
		Cable length: 0.50 m	1SAJ 230 000 R1005
		Cable length: 1.00 m	1SAJ 230 000 R1010
		Cable length: 5.00 m	1SAJ 230 000 R1050
	MRP21-FBP (MODBUS)	Cable length: 0.25 m	1SAJ 250 000 R0003
		Cable length: 0.50 m	1SAJ 250 000 R0005
		Cable length: 1.00 m	1SAJ 250 000 R0010
		Cable length: 5.00 m	1SAJ 250 000 R0050
	ASP22-FBP (AS-Interface)	Cable length: 0.25 m	1SAJ 220 000 R0003
		Cable length: 0.50 m	1SAJ 220 000 R0005
		Cable length: 1.00 m	1SAJ 220 000 R0010
		Cable length: 5.00 m	1SAJ 220 000 R0050
DIN rail adapter CDA11-FBP for PDQ22-FBP			1SAJ 929 300 R0001

7. Ordering data (continued)

Description			Order code
Earth fault monitors			
Type			
CEM11-FBP.20	Through hole diameter: 20 mm Earth fault currents [mA]: 80 [1], 300, 550, 750, 1000, 1200, 1500, 1700		1SAJ 929 200 R0020
CEM11-FBP.35	Through hole diameter: 35 mm Earth fault currents [mA]: 100 [1], 500, 1000, 1400, 2000, 2400, 3000, 3400		1SAJ 929 200 R0035
CEM11-FBP.60	Through hole diameter: 60 mm Earth fault currents [mA]: 120 [1], 1000, 2000, 2800, 4000, 4800, 6000, 6800		1SAJ 929 200 R0060
External current transformers			
Type (recommended current range)			
a	KORC 4L185 R/4	(63-185 A)	1SCA 022 193 R7830
b	KORC 4L310 R/4	(185-310 A)	1SCA 022 181 R0760
c	KORC 5L500 R/4	(310-500 A)	1SCA 022 208 R1010
d	KORC 5L850 R/4	(500-850 A)	1SCA 022 208 R1440
Link kit (bar) for current transformers			
Type (for contactor type)			
a	DT450/A185	(AF145 - AF185)	1SAZ 501 901 R1001
b	DT450/A300	(AF260 - AF300)	1SAZ 501 902 R1001
c	DT500/AF460L	(AF400, AF460) [2]	1SAX 701 902 R1001
d	DT800/AF750L	(AF580, AF750) [2]	1SAX 801 902 R1001

[1] Lowest values have higher inaccuracy
[2] Link kits for Star-delta starter. Others see catalogue.

8. Control functions

Circuit arrangement, description, data and parameters, time diagrams

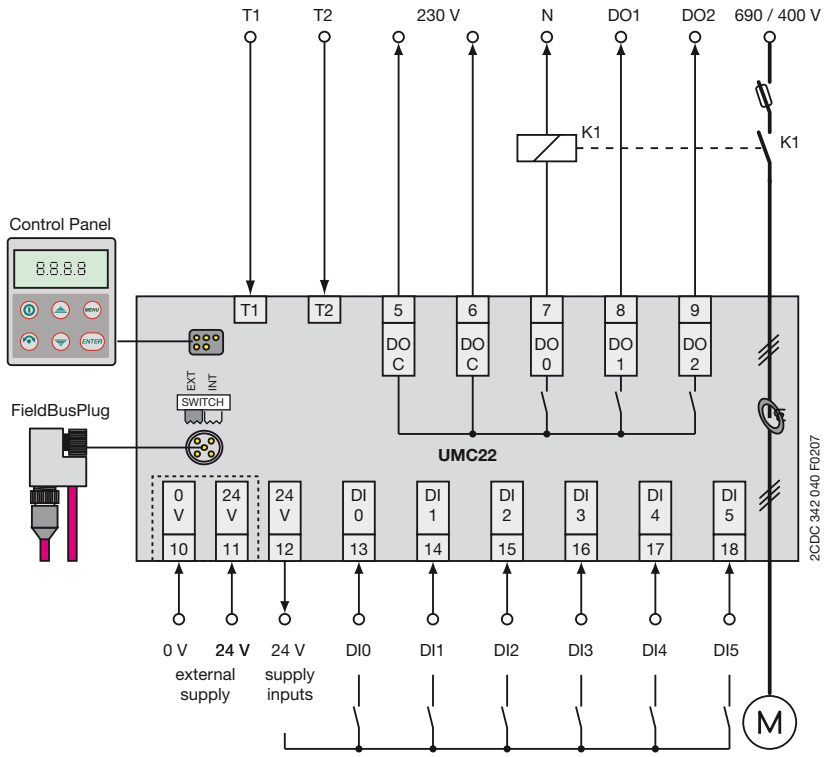

Illustration 8-1: UMC22-FBP: Control function = Direct starter (Example)

Content

8. Control functions 78
8.1 Transparent 79
8.2 Overload relay 82
8.3 Direct starter 86
8.4 Reversing starter 93
8.5 Star-delta starter 1 101
8.6 Star-delta starter 2 109
8.7 Pole-changing starter 1 117
8.8 Actuator 1, 2, 3 and 4 127

8.1 Transparent

The UMC22 parametrized with the *Control function* = *Transparent* (default) behaves like an I/O-module with an integrated overload check. The outputs DO0 ... DO2 and the inputs DI0 ... DI5 are directly connected to the fieldbus and are independent of the overload status.

8.1.1 Circuit diagrams

8.1.1.1 Basis circuit

Parameters to be changed (5.3.4) **(based on default)**

- ▶ *Address* via Control Panel or via Addressing Set

  If protection function is used:
- ▶ *Set current 1*
- ▶ Overload protection parameters

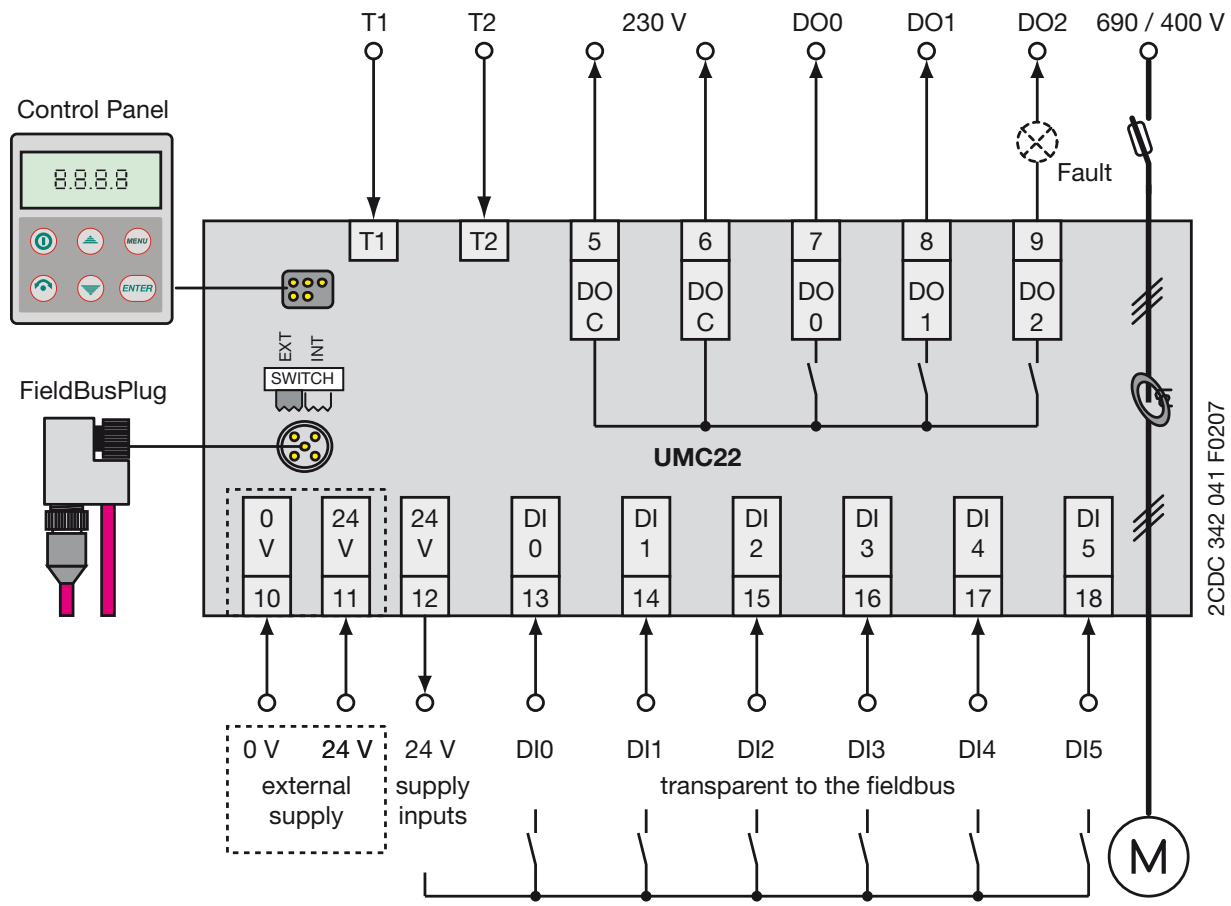

Illustration 8-2: UMC22-FBP: Control function = Transparent (Basis circuit)

8.1.2 Description

8.1.2.1 Attached control functions

The only possible exceptions:

- ▶ *Fault output = On*: The output DO2 = 1 if the internal fault signal is set.
  Fault output = Off: Default. Output DO2 is controlled directly via the fieldbus.
- ▶ *Multi-function input*: Some functions are available.

Remark:

All parameters are taken over immediately with the exception Control function that needs power up on the UMC22.

8.1.2.2 Fault behaviour

The internal fault bit is set only by faults in the mesuring part (all faults, e.g. trip, phase loss etc.) or by low signal on DI2 if the parameter Fault input = On. In this case:

- ▶ the monitoring signal FAULT is sent to the fieldbus,
- ▶ the red LED lights on,
- ▶ the FAULT signal on the Control Panel flashes,
- ▶ but the outputs DO0, DO1 and - depending on the parametrization - DO2 are controlled via fieldbus commands as before.

If a motor overload is the cause of the fault signal, the Cooling time is started additionally. The *Cooling time* is a parameter and can be adjusted.

More detailed information are monitored in the diagnosis telegram and on the Control Panel.

All faults can be acknowledged via fieldbus, via Control Panel or if parameterized via multi-function inputs.

8.1.2.3 Addressing (3.3.1)

The slave address of the UMC22-FieldBusPlug combination is not a parameter but can be set with Control Panel or with separate Addressing Set.

Important!

Normally the inputs and the internal electronic circuits are supplied locally via the terminals 10 and 11. In this case the SWITCH must be set to EXT. The connection of distant contacts or sensors requests urgently this kind of supply.

If only contacts next to the UMC22 are used - that means the 24 V wiring can be surveyed easily - the supply via the fieldbus and the FieldBusPlug is possible (SWITCH to INT) (3.2.1).

8.1.3 Interface and data overview

Hardware Inputs / Outputs

Terminal	13	14	15	16	17	18
Device input (to bus)	DI0	DI1	DI2	DI3	DI4	DI5
Terminal	7	8	9			
Device output (from bus)	DO0	DO1	DO2 [2] (fault output)			

Monitoring telegram, digital

Bit No.	7	6	5	4	3	2	1	0
Byte 0	WARNING	FAULT	-	-	-	-	-	-
Byte 1	DI5 (UMC input)	DI4 (UMC input)	DI3 (UMC input)	DI2 (UMC input)	DI1 (UMC input)	DI0 (UMC input)	-	-

Monitoring telegram, analog

Byte 0 and Byte 1: Motorcurrent in % of set current

Command telegram, digital only

Bit No.	7	6	5	4	3	2	1	0
Byte 0	-	FAULT RESET	-	-	SELF TEST	-	-	-
Byte 1	DO2 [1] (UMC output)	DO1 (UMC output)	DO0 (UMC output)	-		-	-	-

Diagnosis telegram

Bit No.	7	6	5	4	3	2	1	0
Fault Byte 0	-	Self test failed F010 [2]	Fault signal on DI0, DI1 or DI2 [1] F011 [2]	-	-	-	-	-
Fault Byte 1	Overload (trip) fault trip [2]	-	Communi-cation fault F003 [2]	Parameter out of range F004 [2]	-	-	-	-
Warning Byte 2	Motor current high threshold [1]	Motor current low threshold [1]	-	Self test running buSy [2]	-	Self test running buSy [2]	-	-
Warning Byte 3	If Parameter out of range: Pamameter number (leading two stages of the parameter, e.g. "02" Current factor) If Self test fauled: Self test error number (only for service) In all other cases:							
	-	Fault on DI2 F024 [2]	Faut on DI1 F023 [2]	Fault on DI0 F022 [2]	Earth fault F020 [2]	PTC short-circuit F019 [2]	PTC wire break F018 [2]	PTC temperature F017 [2]

[1] depending on parameterization [2] displayed on the Control Panel Busdata details see 5.2.2.

8.2 Overload relay

The UMC22 parametrized with the *Control function = Overload relay* provides excellent protection of a motor. Dedicated to replace a standard overload relay, stand-alone operation can be selected via Control Panel setting the parameter *Bus connection = Off*.

8.2.1 Circuit diagram

8.2.1.1 Basis circuit

Main features	**Parameters to be changed** (5.3.4) **(based on default)**
▶ Motor contactor at output DO0	▶ *Control function = Overload relay* ▶ *Set current 1* ▶ Overload protection parameters ▶ *Bus connection = Off* (Off if used without field-bus, to be selected by Control Panel: bu.co) ▶ *Address* (only when used with filedbus) via Control Panel or Addressing Set

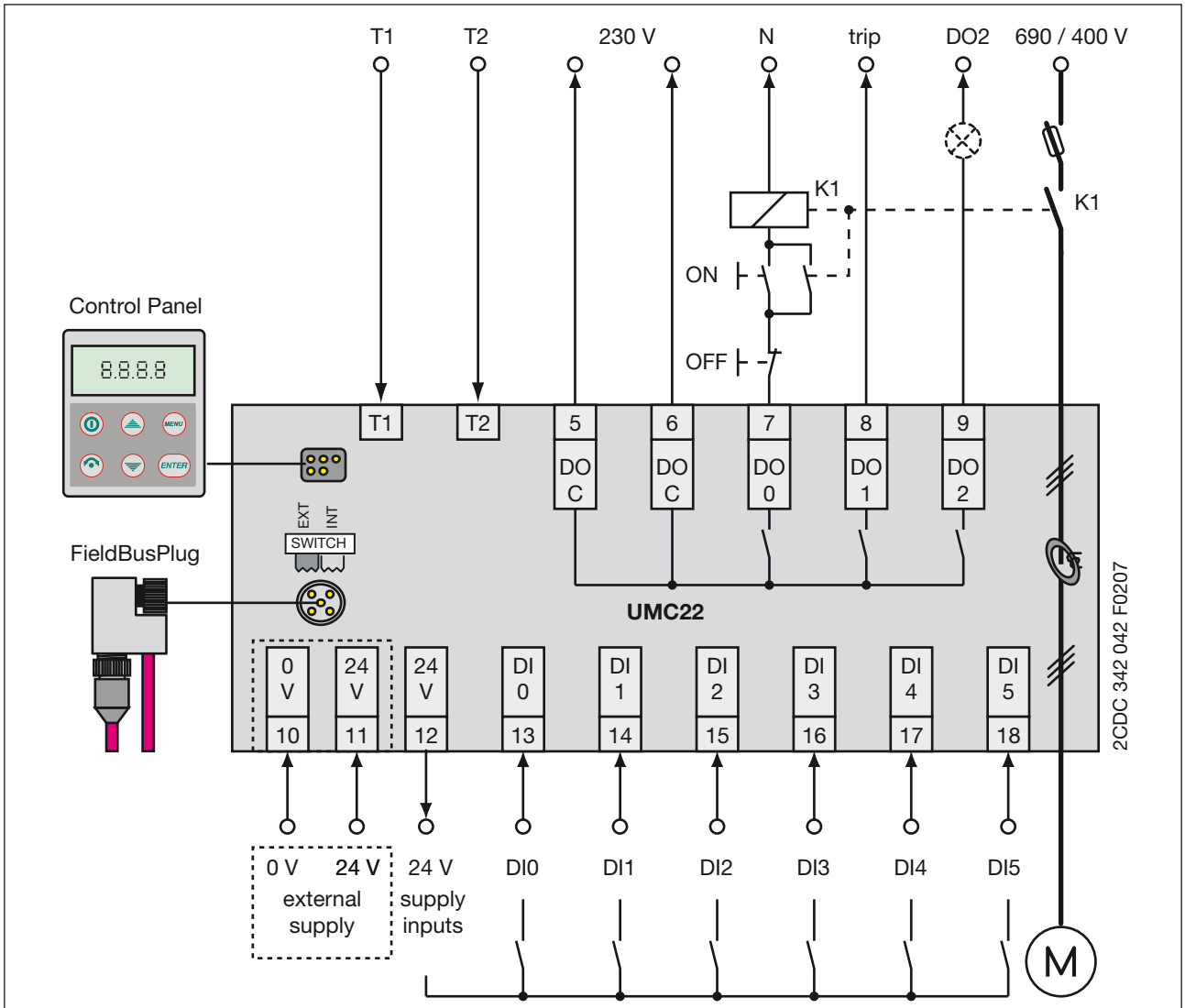

Illustration 8-3: UMC22-FBP: Control function = Overload relay (Basis circuit)

8.2.2 Description

After parametrizing *Control function* = *Overload relay* and *Bus communication* = *Off* power up is necessary to start the operation. Immediately contact DO0 closes, contact DO1 opens.

If *Bus communication* = *On* the active connection to the control system is an additional condition to start the operation.

8.2.2.1 Attached control functions

- ▶ *Fault output* = *On*: Fault output is activated. The output contact DO2 operates similar to DO1.
  Fault output = *Off*: The output contact DO2 can be controlled via fieldbus.
- ▶ *Multi-function input*: Some functions are available.

Remark:

All parameters are taken over immediately with the exception of Control function that needs a power up of the UMC22.

8.2.2.2 Fault behaviour

All kinds of detected external and internal faults set the internal fault bit. Result:

- ▶ contact DO0 opens,
- ▶ contact DO1 (and DO2 if parameterized) closes,
- ▶ the monitoring signal FAULT is send to the fieldbus,
- ▶ the red LED lights on and
- ▶ the FAULT signal on the Control Panel flashes.

If a motor overload is the cause of the fault signal, the cooling time is started additionally. The *Cooling time* is a parameter and can be adjusted, the default value is 120 s.

All faults can be acknowledged via fieldbus, via Control Panel or if parameterized via multi-function inputs.

Exception:

If the parameter *Automatic fault reset* = *On* the contacts DO0 closes and DO1 (and DO2) opens immediately when the cooling time is over (only available with Overload relay).

8.2.2.3 Addressing (3.3.1)

The slave address of the UMC22-FieldBusPlug combination is not a parameter but can be set with Control Panel or with separate Addressing Set.

Important!

If the UMC22-FBP is connected to a fieldbus via a FieldBusPlug:

Normally the inputs and the internal electronic circuits are supplied locally via the terminals 10 and 11. In this case the SWITCH must be set to EXT. The connection of distant contacts or sensors requests urgently this kind of supply.

If only contacts next to the UMC22 are used - that means the 24 V wiring can be surveyed easily - the supply via the fieldbus and the FieldBusPlug is possible. In this case the SWITCH must be set to INT (3.2.1).

8.2.3 Interface and data overview

Hardware Inputs / Outputs

Terminal	13	14	15	16	17	18
Device input (to bus)	DI0	DI1	DI2	DI3	DI4	DI5
Terminal	7	8	9			
Device output (from bus)	DO0 trip	DO1 trip inverted	DO2 [1] (fault output)			

Monitoring telegram, digital

Bit No.	7	6	5	4	3	2	1	0
Byte 0	WARNING	FAULT	-	-	-	-	-	-
Byte 1	DI5 (UMC input)	DI4 (UMC input)	DI3 (UMC input)	DI2 (UMC input)	DI1 (UMC input)	DI0 (UMC input)	-	-

Monitoring telegram, analog

Byte 0 and Byte 1: Motorcurrent in % of set current

Command telegram, digital Diagnosis telegram

Bit Nr.	7	6	5	4	3	2	1	0
Byte 0	-	FAULT RESET	-	-	SELF TEST	-	-	-
Byte 1	DO2 [1] (UMC output)	-	-	-		-	-	-

Diagnosis telegram

Bit No.	7	6	5	4	3	2	1	0
Fault Byte 0	-	Self test failed F010 [2]	Fault signal on DI0, DI1 or DI2 [1] F011 [2]	-	-	-	-	-
Fault Byte 1	Overload (trip) fault trip [2]	-	Communi-cation fault F003 [2]	Parameter out of range F004 [2]	Current check-back fault [1] F005 [2]	-	-	-
Warning Byte 2	Motor current high threshold [1]	Motor current low threshold [1]	-	Cooling time running °C [2]	-	Self test running buSy [2]	-	-
Warning Byte 3	If Parameter out of range: Pamameter number (leading two stages of the parameter, e.g. "02" Current factor) If Self test fauled: Self test error number (only for service) In all other cases:							
	-	Fault on DI2 F024 [2]	Faut on DI1 F023 [2]	Fault on DI0 F022 [2]	Earth fault F020 [2]	PTC short-circuit F019 [2]	PTC wire break F018 [2]	PTC temperature F017 [2]

[1] depending on parameterization [2] displayed on the Control Panel Busdata details see 5.2.2.

8.2.4 Time diagram

8.2.4.1 Overload

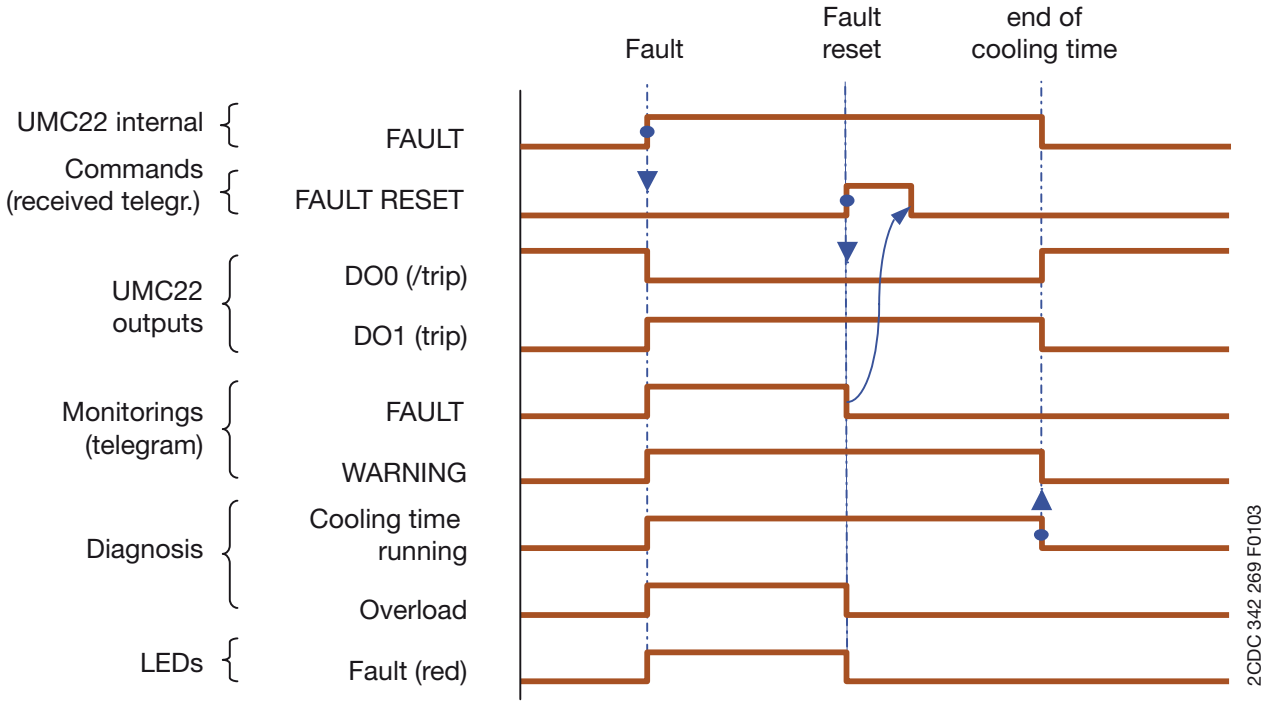

Illustration 8-4: UMC22-FBP: Control function = Overload relay - time diagram Overload

8.3 Direct starter

The UMC22 parametrized with the *Control function = Direct starter* provides excellent protection and control of a motor for one direction of rotation. The connection to a fieldbus is made via the appropriate type of the FieldBusPlug.

8.3.1 Circuit diagrams

8.3.1.1 Basis circuit

Main features	**Parameters to be changed** (5.3.4) **(based on default)**
▶ Contactor K1 at DO0	▶ *Control function = Direct starter*
▶ Check-back by current	▶ *Set current 1*
▶ Inputs are transparent to the fieldbus	▶ Overload protection parameters
	▶ *Address* via Control Panel or Addressing Set

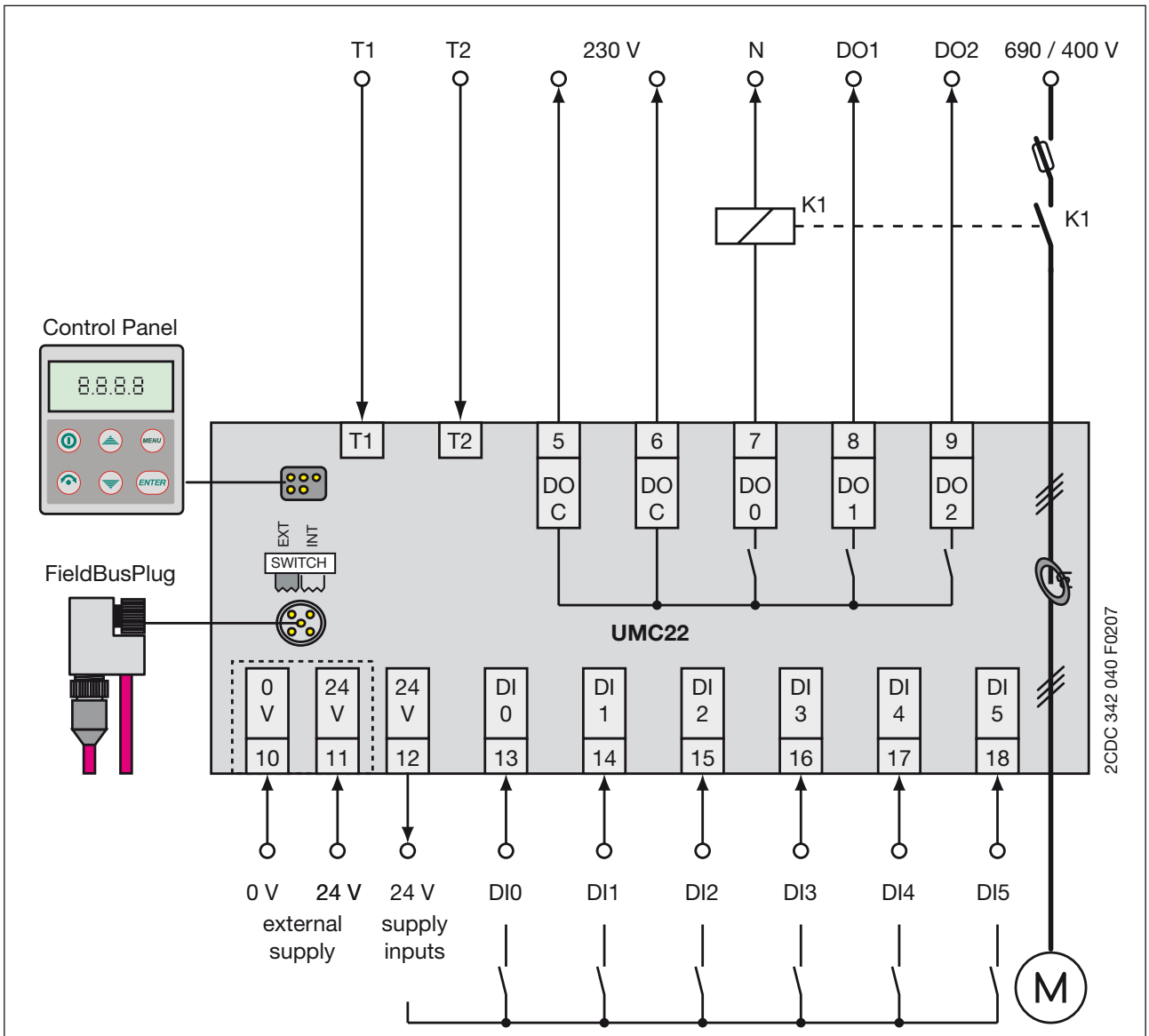

Illustration 8-5: UMC22-FBP: Control function = Direct starter (Basis circuit)

8.3.1.2 Extended circuit

Main features	Parameters to be changed (5.3.4) (based on default)
▶ Contactor K1 at output DO0	▶ *Control function = Direct starter*
▶ Check-back by auxiliary contacts at input DI0	▶ *Check-back = Auxiliary contacts*
▶ Fault indication at output DO2	▶ *Fault output = On*
▶ Fault input at DI2 (0 V signal = fault)	▶ *DI2 Multi-function input = 001*
▶ Local control via inputs DI4 and DI5	▶ *Local operation via DIs= On, 002, 003 or 004*
	▶ *Set current 1*
	▶ Overload protection parameters
	▶ *Address* via Control Panel or Addressing Set

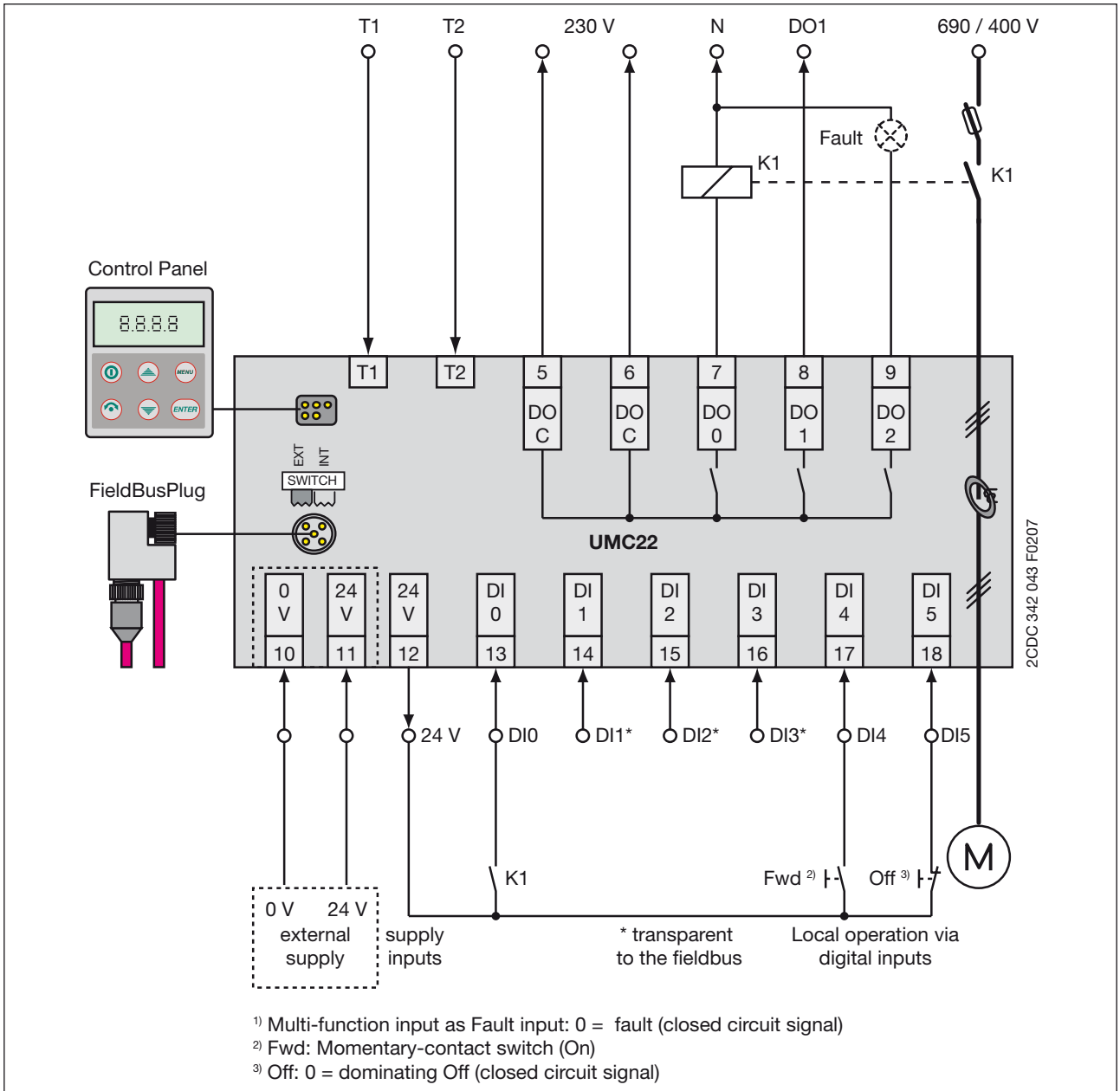

1) Multi-function input as Fault input: 0 = fault (closed circuit signal)
2) Fwd: Momentary-contact switch (On)
3) Off: 0 = dominating Off (closed circuit signal)

Illustration 8-6: UMC22-FBP: Control function = Direct starter (extended circuit)

8.3.2 Description

With *Direct starter* the output DO0 is defined to drive the motor contactor coil.

8.3.2.1 Attached control function (5.3.1)

The parameter set *Attached control functions* prepare the *Direct starter* to support different circuit arrangements including the use of inputs and outputs for particular use.

Examples:

Fault output (5.3.4)

Activate via Parameter *Fault output* = *On*:
If a fault appears
- the internal fault signal is set and
- the output contact DO2 closes.

Multi-function inputs DI0, DI1 and DI2 (5.3.4)

Depending of the parameterization of the parameters *DI0 Multi-function input*, *DI1 Multi-function input* and *DI2 Multi-function input* the following functions are possible:

- ► *Transparent* (default): status is monitored only to the fieldbus
- ► *Fault signal always / not delayed or delayed* with 1 to 255 s:
  The delay time starts whether the motor is running or not.
- ► *Fault signal dependent / delayed* with 1 to 255 s:
  The delay time starts only when the motor is running.
- ► *Motor off always / not delayed or delayed* with 1 to 255 s:
  The delay time starts whether the motor is running or not.
- ► *Motor off dependent / delayed* with 1 to 255 s:
  The delay time starts only when the motor is running.
- ► *Reset internal fault signal*
- ► *Test* → Start without motor (no current check-back when started)

Remark:

- ► DI0, DI1 and DI2 can be parametrized via fieldbus. Only DI2 can be parametrized via Control Panel.
- ► Setting *Check-back* = *Auxiliary contacts* and *DI0 Multi-function input* = *not 000* give the input DI0 two colliding tasks.
  As a result the internal fault signal is set and monitored via different ways, e.g. Parameter out of range / F004 (5.2.1). The motor cannot be started.
- ► DI0: can not be parameterized as Fault signal not delayed (reason: compatibility to older versions)

Local control via digital inputs (5.3.4)

Activate via parameter *Local operation via DIs* = *On*, *002*, *003* or *004*:
- DI4 to start the motor, only via active signal possible
- DI5 to stop the motors, depending on the parameterization via closed circuit or active signal possible

Remark:
A simplified local control is possible via Control Panel (*Direct panel control*):
Start, stop and fault reset.

Further functions (5.3.1)

Other parameters define the protection behaviour and additional functions.

8.3.2.2 Starting

Selection and activation of the control function

The control function can be set via LCD-panel or fieldbus and is taken over, if the motor is off.
If the configuration was changed in the control system, it must be downloaded to the UMC22 before it can be used.

Remark:
Most of the bus masters download / overwrite all parameters during power-up of the bus master or the UMC22. It may seem that the change of parameters via Control Panel is not effective.

Start of the motor

After activation of the selected *Control function* the motor can be started with the bus command RUN FORWARD or via local control.

8.3.2.3 Check-back (5.3.4)

When the motor is started the Check-back status is expected within 300 ms, otherwise a fault is detected. Selectable by parameter *Check-back*: *Motor current* or *Auxiliary contact* signal can serve as check-back status.

Remark:

Check-back = *Simulation* is recommended only to be set via Control Panel during commissioning.

The control system is only allowed to set *Auxiliary contacts* or *Motor current* to guarantee that the check-back operates correctly after next power up.

8.3.2.4 Fault behaviour

All kinds of detected external and internal faults set the internal fault bit. Result:

- ► Contact DO0 for the contactor coil opens,
- ► the monitoring signal FAULT is sent to the fieldbus,
- ► the red LED lights on and
- ► the FAULT signal on the Control Panel display flashes.
- ► If parameterized the output DO2 switches on.

If a motor overload is the cause of the fault signal, the cooling time is started additionally . The *Cooling time* is a parameter and can be adjusted. The running cooling time is shown on the Control Panel with „°C“.

All faults (except communication fault) must be acknowledged via fieldbus (5.2.1), via Control Panel (9.1.3) or if parameterized via multi-function inputs (5.3.4) to allow to start the motor.
Additional the cooling time (5.3.4) must have elapsed to allow to restart the motor with a 0→1 transition of the RUN command (5.2.1).

More detailed information are monitored in the diagnosis telegram (5.2.1) and on the Control Panel (9.2.1).

8.3.2.5 Addressing (3.3.1)

The slave address of the UMC22-FieldBusPlug combination is not a parameter but can be set with Control Panel (9.2.2) or with separate Addressing Set.

Important!

Normally the inputs and the internal electronic circuits are supplied locally via the terminals 10 and 11. In this case the SWITCH must be set to EXT. The connection of distant contacts or sensors requests urgently this kind of supply.

If only contacts next to the UMC22-FBP are used - that means the 24 V wiring can be surveyed easily - the supply via the fieldbus and the FieldBusPlug is possible (SWITCH to INT) (3.2.1).

8.3.3 Interface and data overview

Hardware Inputs / Outputs

Terminal	13	14	15	16	17	18
Device input (to bus)	DI0 [1] (Multi-function input or check-back)	DI1 [1] (Multi-function input)	DI2 [1] (Multi-function input)	DI3	DI4 [1] (Local: On)	DI5 [1] (Local: Off)
Terminal	7	8	9			
Device output (from bus)	DO0 Forward	DO1	DO2 [1] (Fault output)			

Monitoring telegram, digital

Bit No.	7	6	5	4	3	2	1	0
Byte 0	WARNING	FAULT	LOCAL CONTROL	-	-	RUN FORWARD	OFF	-
Byte 1	DI5 [1] (UMC input)	DI4 [1] (UMC input)	DI3 [1] (UMC input)	DI2 [1] (UMC input)	DI1 [1] (UMC input)	DI0 [1] (UMC input)	-	-

Monitoring telegram, analog

Byte 0 and Byte 1: Motorcurrent in % of set current

Command telegram, digital only

Bit No.	7	6	5	4	3	2	1	0
Byte 0	-	FAULT RESET)	AUTO MODE	-	SELF TEST	RUN FORWARD	OFF	-
Byte 1	DO2 [1] (UMC output)	DO1 (UMC output)	-	-		-	-	-

Diagnosis telegram

Bit No.	7	6	5	4	3	2	1	0
Fault Byte 0	-	Self test failed F010 [2]	Fault signal on DI0, DI1 or DI2 [1] F011 [2]	-	-	-	-	-
Fault Byte 1	Overload (trip) fault trip [2]	Motor blocked F002 [2]	Communi-cation fault F003 [2]	Parameter out of range F004 [2]	Current check-back fault [1] F005 [2]	-	-	Relay 0 check-back fault [1] F008 [2]
Warning Byte 2	Motor current high threshold [1]	Motor current low threshold [1]	-	Cooling time running °C [2]	-	Self test running buSy [2]	-	-
Warning Byte 3	If Parameter out of range: Pamameter number (leading two stages of the parameter, e.g. "02" Current factor) If Self test fauled: Self test error number (only for service) In all other cases:							
	-	Fault on DI2 F024 [2]	Faut on DI1 F023 [2]	Fault on DI0 F022 [2]	Earth fault F020 [2]	PTC short-circuit F019 [2]	PTC wire break F018 [2]	PTC temperature F017 [2]

[1] depending on parameterization [2] displayed on the Control Panel Busdata details see 5.2.2.

8.3.4 Timing diagram

8.3.4.1 Overload

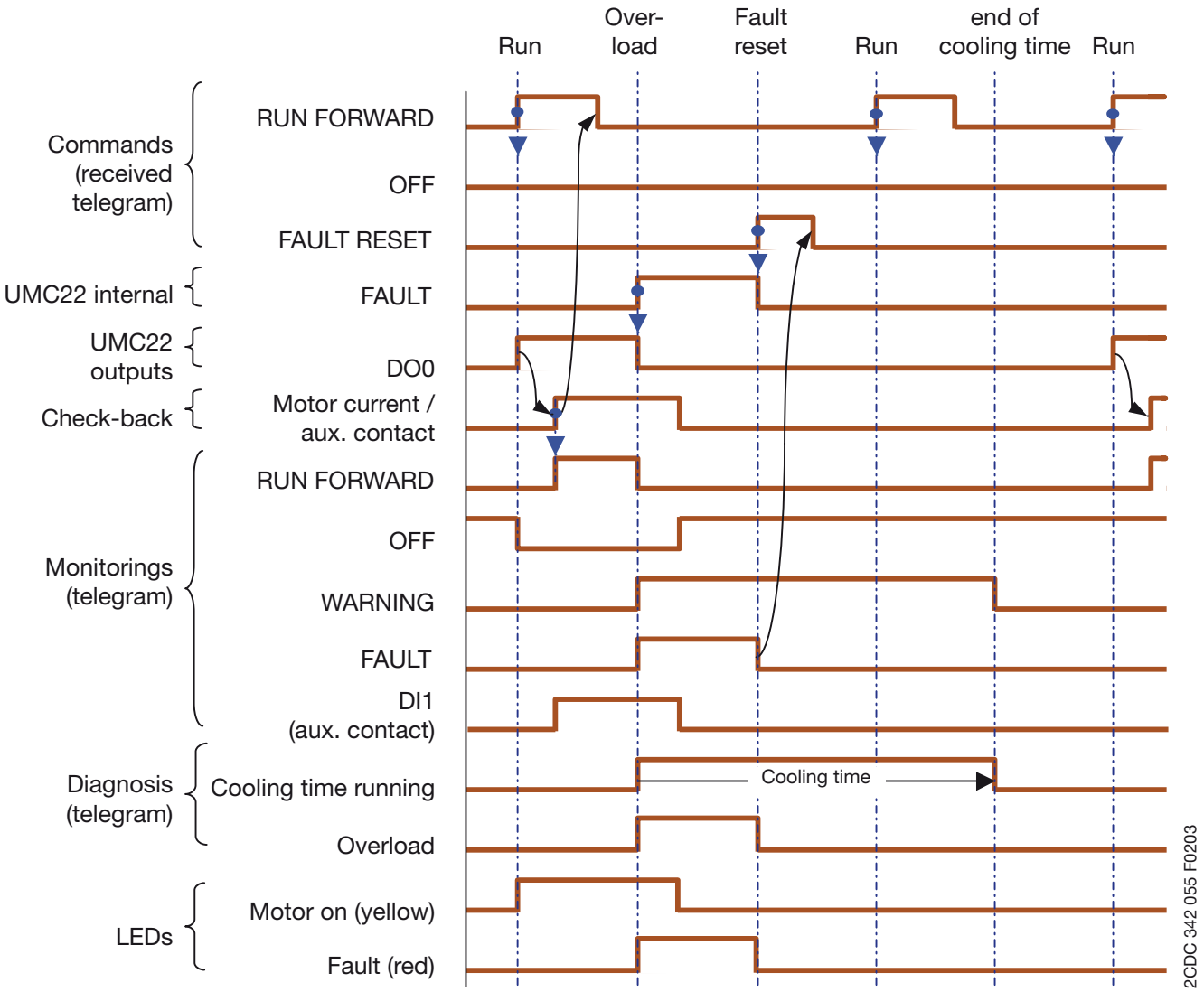

Illustarion 8-7: UMC22-FBP: Control function = Direct starter - Timing diagram overload

8.4 Reversing starter

The UMC22 parametrized with the *Control function = Reversing starter* provides excellent protection and control of a motor for two directions of rotation.
The connection to a fieldbus is made via the appropriate type of the FieldBusPlug.

8.4.1 Circuit diagram

8.4.1.1 Basis circuit

Main features	**Parameters to be changed** (5.3.4) **(based on default)**
▶ Contactor K1 (forward) at output DO0	▶ *Control function = Reversing starter*
▶ Check-back by current	▶ *Set current 1*
▶ Contactor K2 (reverse) at output DO1	▶ Overload protection parameters
▶ Inputs are transparent to the fieldbus	▶ *Address* via Control Panel or Addressing Set

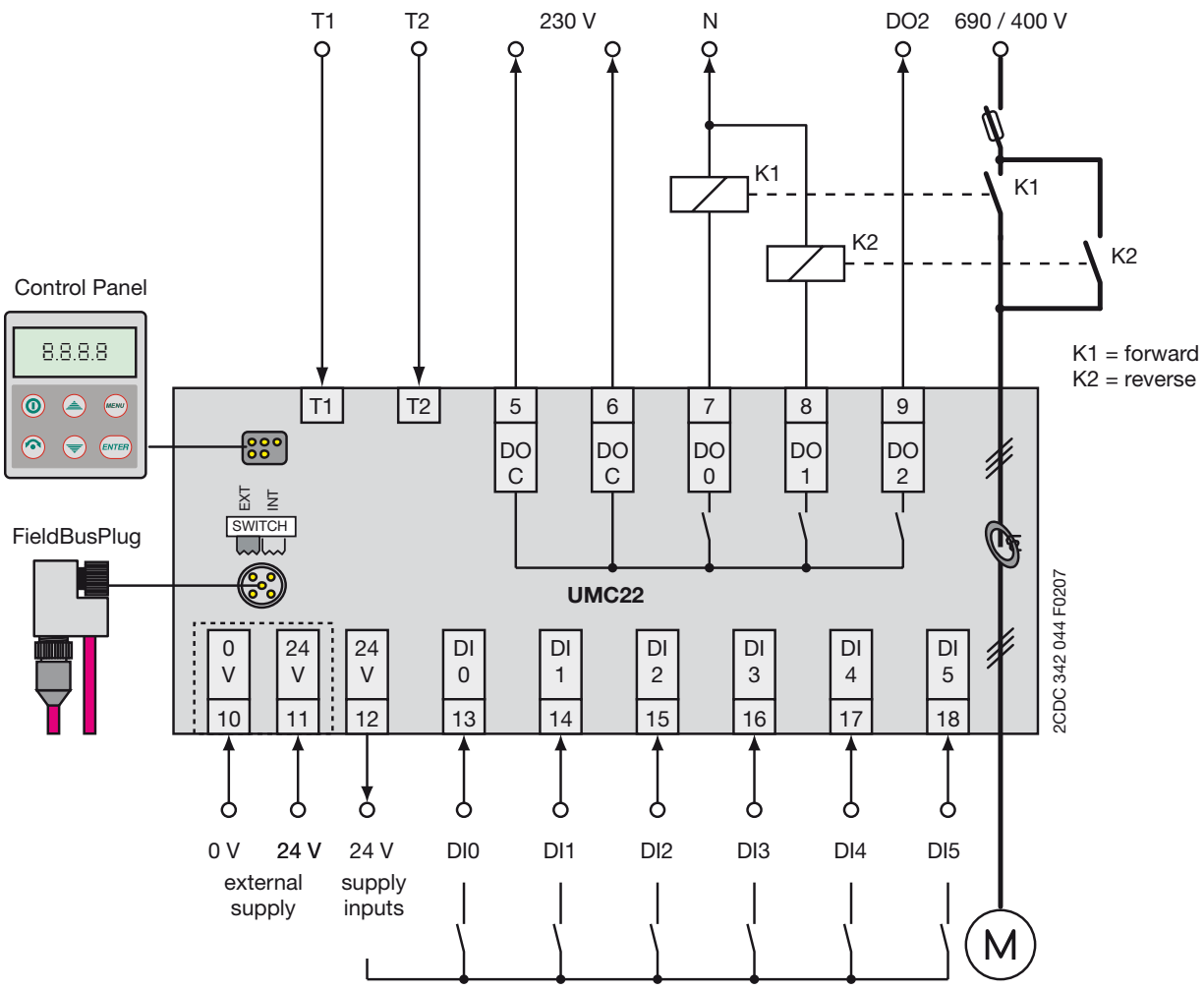

Illustration 8-8: UMC22-FBP: Control function = Reversing starter (Basis circuit)

8.4.1.2 Extended circuit

Main features	**Parameters to be changed** (5.3.4) **(based on default)**
▶ Contactor K1 (forward) at output DO0	▶ *Control function = Reversing starter*
▶ Check-back by auxiliary contact at DI0	▶ *Check-back = Auxiliary contact*
▶ Contactor K2 (reverse) at output DO1	▶ *DI2 Multi-function input = 001*
▶ Fault input at DI2 (0 V signal = fault)	▶ *Fault output = On*
▶ Fault indication at output DO2	▶ *Local operation via DIs = On, 002, 003 or 004*
▶ Local control via digital inputs DI3, DI4, DI5	▶ *Set current 1*
	▶ Overload protection parameters
	▶ *Address* via Control Panel or Addressing Set

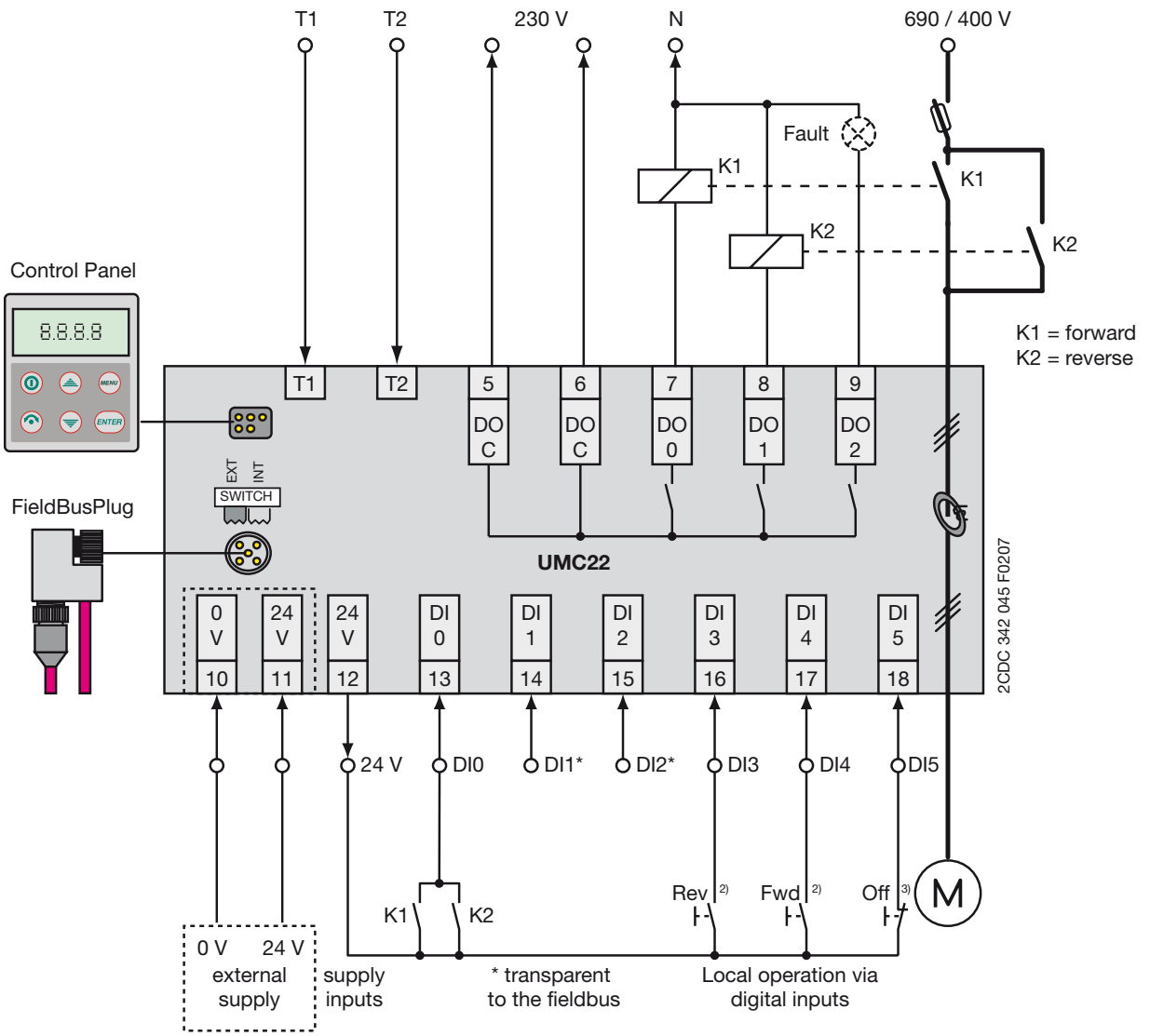

[1] Multi-function input as Fault input: 0 = fault (closed circuit signal)
[2] Fwd, Rev: Momentary-contact switch (On)
[3] Off: 0 = dominating Off (closed circuit signal)

Illustration 8-9: UMC22-FBP: Control function = Reversing starter (Extended circuit)

8.4.2 Description

With *Reversing starter* the outputs DO0 (forward) and DO1 (reverse) are defined to drive the motor contactor coils.

8.4.2.1 Attached control function (5.3.1)

The parameter set *Attached control functions* prepare the *Reversing starter* to support different circuit arrangements including the use of inputs and outputs for particular use.

Fault output (5.3.4)

Activate via Parameter *Fault output = On*:
If a fault appears
- the output contact DO2 closes and
- the internal fault signal is set.

Multi-function inputs DI0, DI1 and DI2 (5.3.4)

Depending of the parameterization of the parameters *DI0 Multi-function input*, *DI1 Multi-function input* and *DI2 Multi-function input* the following functions are possible:

- ► *Transparent* (default): status is monitored only to the fieldbus
- ► *Fault signal always / not delayed or delayed* with 1 to 255 s:
  The delay time starts whether the motor is running or not.
- ► *Fault signal dependent / delayed* with 1 to 255 s:
  The delay time starts only when the motor is running.
- ► *Motor off always / not delayed or delayed* with 1 to 255 s:
  The delay time starts whether the motor is running or not.
- ► *Motor off dependent / delayed* with 1 to 255 s:
  The delay time starts only when the motor is running.
- ► *Reset internal fault signal*
- ► *Test* → Start without motor (no current check-back when started)

Remark:

- ► DI0, DI1 and DI2 can be parametrized via fieldbus. Only DI2 can be parametrized via Control Panel.
- ► Setting *Check-back = Auxiliary contacts* and *DI0 Multi-function input = not 000* give the input DI0 two colliding tasks.
  As a result the internal fault signal is set and monitored via different ways, e.g. Parameter out of range / F004 (5.2.1). The motor cannot be started.
- ► DI0: can not be parameterized as Fault signal not delayed (reason: compatibility to older versions)

Local control via digital inputs (5.3.4)

Activate via parameter *Local operation via DIs = On*, *002*, *003* or *004*:
- DI3 and DI4 to start the motor, only via active signal possible
- DI5 to stop the motors, depending on the parameterization via closed circuit or active signal possible

Remark:

A simplified local control is possible via Control Panel (*Direct panel control*):
Start, stop and fault reset.

Further functions (5.3.1)

Other parameters define the protection behaviour and additional functions.

8.4.2.2 Starting

Selection and activation of the control function

The control function can be set via LCD-panel or fieldbus and is taken over, if the motor is off.
If the configuration was changed in the control system, it must be downloaded to the UMC22 before it can be used.

Remark:
Most of the bus masters download / overwrite all parameters during power-up of the bus master or the UMC22. It may seem that the change of parameters via Control Panel is not effective.

Start of the motor

After activation of the selected *Control function* the motor can be started with the bus command RUN FORWARD or RUN REVERSE or via local control.

8.4.2.2 Change direction

- ► An OFF command is necessary before switching to the opposite direction.
- ► The OFF command starts the *Reversing lock-out time* (parameterizable).
- ► The opposite RUN command - 0-1 transition - is accepted only when the *Reversing lock-out time* has elapsed.

8.4.2.4 Check-back (5.3.4)

When the motor is started the *Check-back* status is expected within 300 ms, otherwise a fault is detected.

Selectable by parameter *Check-back*: *Motor current* or *Auxiliary contact* signal can serve as check-back status.

Remark:

Check-back = *Simulation* is recommended only to be set via Control Panel during commissioning.

The control system is only allowed to set *Auxiliary contacts* or *Motor current* to guarantee that the check-back operates correctly after next power up.

8.4.2.5 Fault behaviour

All kinds of detected external and internal faults set the internal fault bit. Result:

- ► Contact DO0 or DO1 for the contactor coil opens,
- ► the monitoring signal FAULT is sent to the fieldbus,
- ► the red LED lights on and
- ► the FAULT signal on the Control Panel display flashes.
- ► If parameterized the output DO2 switches on.

If a motor overload is the cause of the fault signal, the cooling time is started additionally .
The *Cooling time* is a parameter and can be adjusted. The running cooling time is shown on the Control Panel with „°C“.

All faults (except communication fault) must be acknowledged via fieldbus (5.2.1), via Control Panel (9.1.3) or if parameterized via multi-function inputs (5.3.4) to allow to start the motor.
Additional the cooling time (5.3.4) must have elapsed to allow to restart the motor with a 0→1 transition of the RUN command (5.2.1).

More detailed information are monitored in the diagnosis telegram (5.2.1) and on the Control Panel (9.2.1).

8.4.2.5 Addressing (3.3.1)

The slave address of the UMC22-FieldBusPlug combination is not a parameter but can be set with Control Panel (9.2.2) or with separate Addressing Set.

Important!

Normally the inputs and the internal electronic circuits are supplied locally via the terminals 10 and 11. In this case the SWITCH must be set to EXT. The connection of distant contacts or sensors requests urgently this kind of supply.

If only contacts next to the UMC22 are used - that means the 24 V wiring can be surveyed easily - the supply via the fieldbus and the FieldBusPlug is possible (SWITCH to INT) (3.2.1).

8.4.3 Interface and data overview

Hardware Inputs / Outputs

Terminal	13	14	15	16	17	18
Device input (to bus)	DI0 [1] (Multi-function input or check-back)	DI1 [1] (Multi-function input)	DI2 [1] (Multi-function input)	DI3 [1] (Local: reverse On)	DI4 [1] (Local: forward On)	DI5 [1] (Local: Off)
Terminal	7	8	9			
Device output (from bus)	DO0 Forward	DO1 Reverse	DO2 [1] (Fault output)			

Monitoring telegram, digital

Bit No.	7	6	5	4	3	2	1	0
Byte 0	WARNING	FAULT	LOCAL CONTROL	REVERSE LOCK-OUT TIME	-	RUN FORWARD	OFF	RUN REVERSE
Byte 1	DI5 [1] (UMCinput)	DI4 [1] (UMCinput)	DI3 [1] (UMCinput)	DI2 [1] (UMCinput)	DI1 [1] (UMCinput)	DI0 [1] (UMCinput)	-	-

Monitoring telegram, analog

Byte 0 and Byte 1: Motorcurrent in % of set current

Command telegram, digital only

Bit Nro	7	6	5	4	3	2	1	0
Byte 0	-	FAULT RESET	AUTO MODE	-	SELF TEST	RUN FORWARD	OFF	RUN REVERSE
Byte 1	DO2 [1] (UMC output)	-	-	-		-	-	-

Diagnosis telegram

Bit No.	7	6	5	4	3	2	1	0
Fault Byte 0	-	Self test failed F010 [2]	Fault signal on DI0, DI1 or DI2 [1] F011 [2]	-	-	-	-	-
Fault Byte 1	Overload (trip) fault trip [2]	Motor blocked F002 [2]	Communi-cation fault F003 [2]	Parameter out of range F004 [2]	Current check-back fault [1] F005 [2]	-	Relay 1 check-back fault [1] F007 [2]	Relay 0 check-back fault [1] F008 [2]
Warning Byte 2	Motor current high threshold [1]	Motor current low threshold [1]	-	Cooling time running °C [2]	-	Self test running buSy [2]	-	-
Warning Byte 3	If Parameter out of range: Pamameter number (leading two stages of the parameter, e.g. "02" Current factor) If Self test fauled: Self test error number (only for service) In all other cases:							
	-	Fault on DI2 F024 [2]	Faut on DI1 F023 [2]	Fault on DI0 F022 [2]	Earth fault F020 [2]	PTC short-circuit F019 [2]	PTC wire break F018 [2]	PTC temperature F017 [2]

[1] depending on parameterization [2] displayed on the Control Panel Busdata details see 5.2.2.

8.4.4 Timing diagrams

8.4.4.1 Change direction

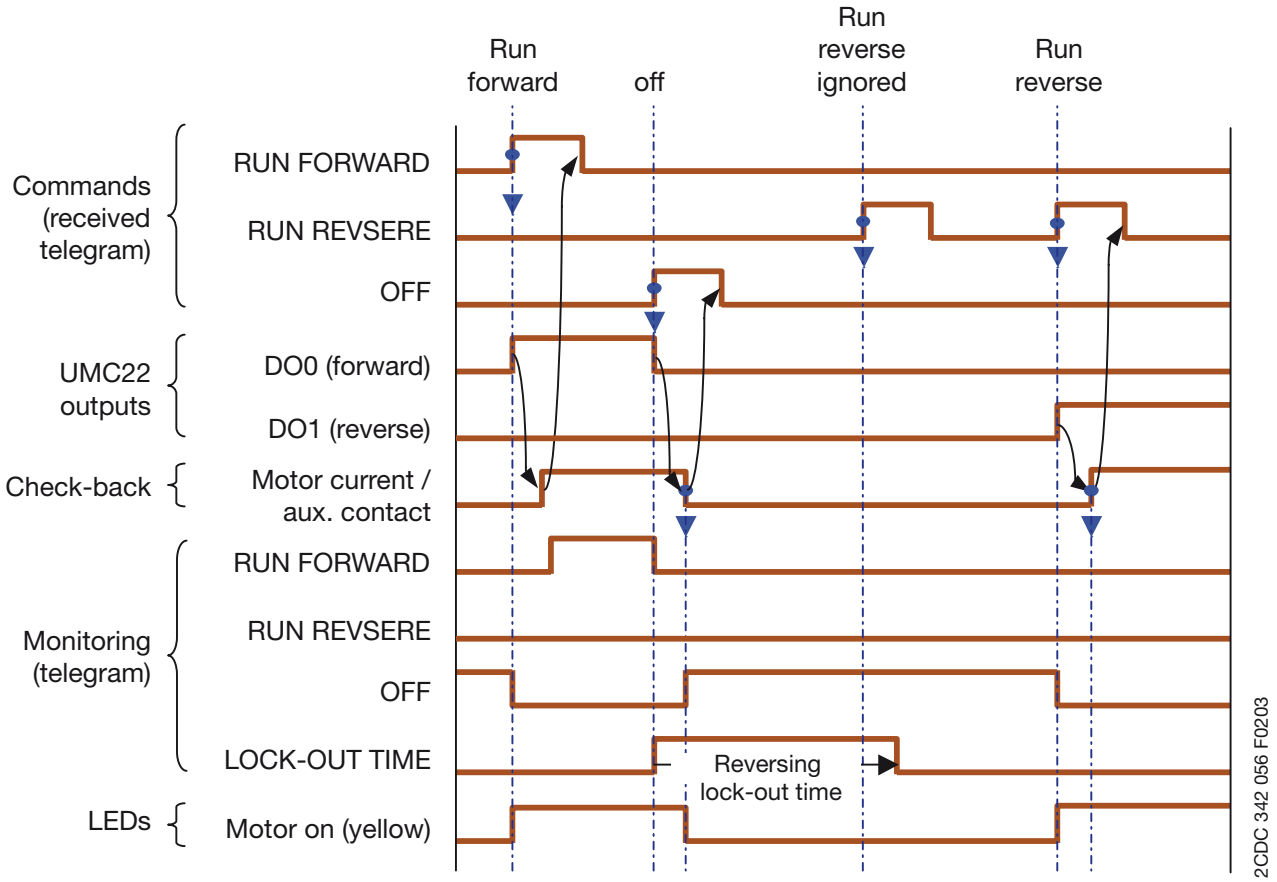

Illustration 8-10: UMC22-FBP: Control function = Reversing starter - Timing diaram change direction

Remark:

- ▶ Opposite direction only possible after OFF and after the *Reverse lock-out time* has elapsed.
- ▶ Restart in the same direction without regard of the *Reverse lock-out time*.

8.4.4.2 Overload

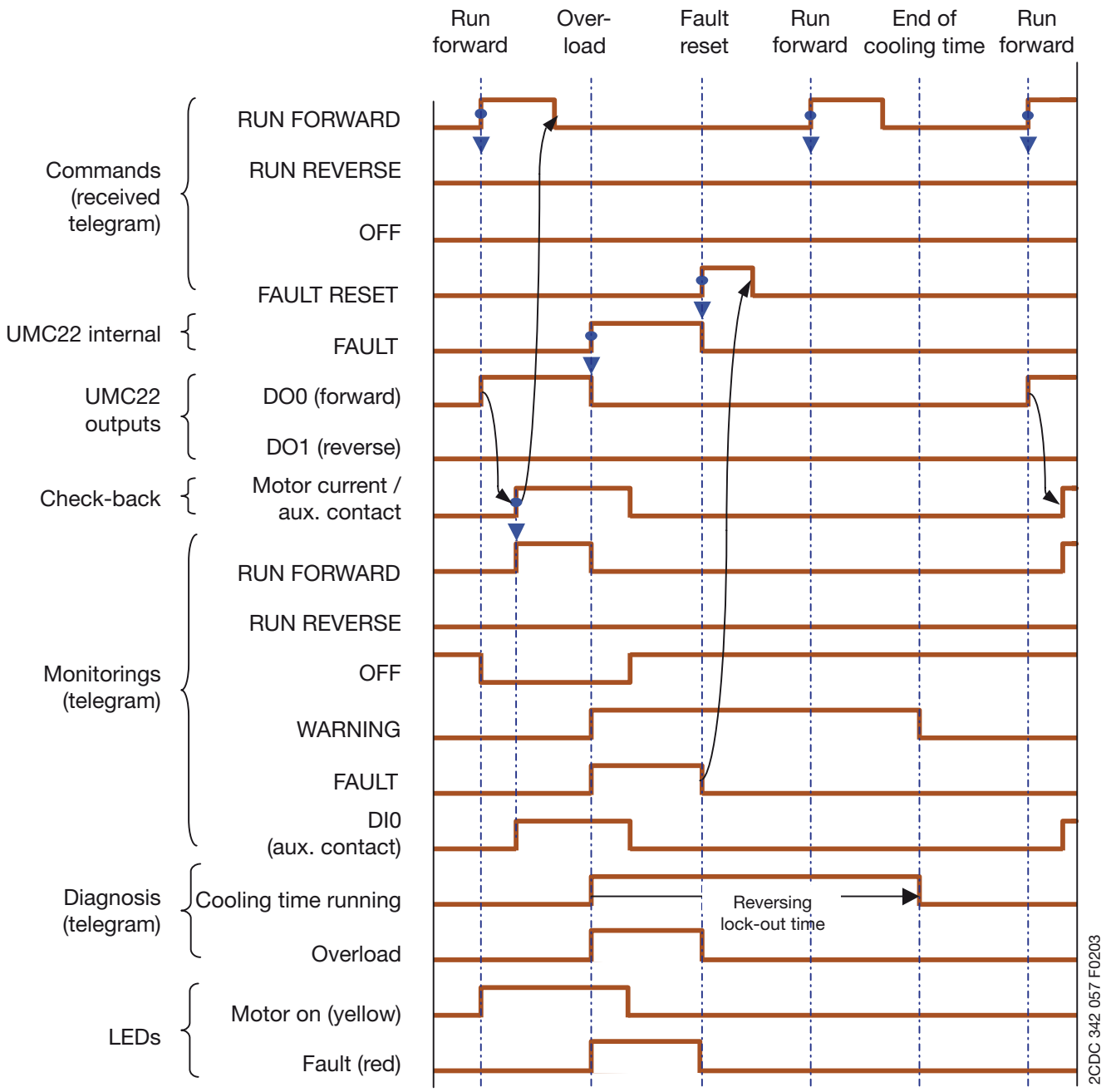

Illustration 8-11: UMC22-FBP: Control function = Reversing starter - Timing diagram overload

Remark:

▶ Restart possible only if cooling time has elapsed and fault is acknowledged.

8.5 Star-delta starter 1

The UMC22 parameterized with the *Control function = Star-delta starter 1* provides excellent protection and control of a motor for one direction of rotation including the time or current controlled star-delta transition. The connection to a fieldbus is made via the appropriate type of the FieldBusPlug.

8.5.1 Circuit diagram

8.5.1.1 Basic circuit

Main features	**Parameters to be changed** (5.3.4) **(based on default)**
▶ Contactor K3 (star) at output DO0	▶ *Control function = Star-delta starter 1*
▶ Contactor K5 (delta) at output DO1	▶ *Set current 1*
▶ Contactor K1 (main) via auxiliary contacts of K3 and K5	▶ Overload protection parameters
▶ Check-back by current	▶ *Address* via Control Panel or Addressing Set

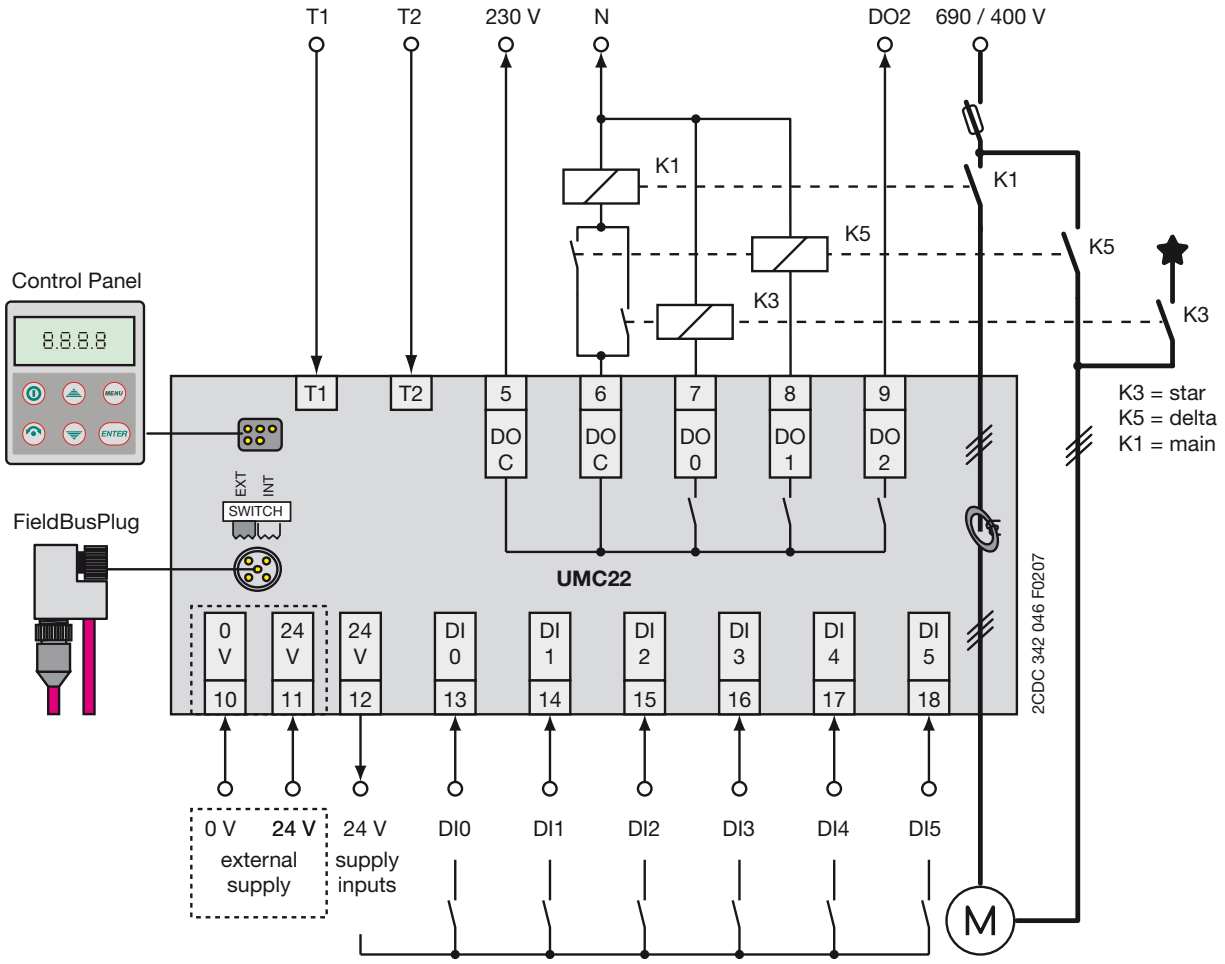

Illustarion 8-12: UMC22-FBP: Control function = Star-delta starer 1 (Basic circuit)

Remark: In this circuit diagram inner delta wiring of the motor is used. The current factor should be set to 1,73 (3.2.3 and 5.3.4).

8.5.1.2 Extended circuit

Main features	Parameters to be changed (5.3.4) (based on default)
▶ Contactor K3 (star) at output DO0	▶ *Control function = Star-delta starter 1*
▶ Contactor K5 (delta) at output DO1	▶ *Fault output = On*
▶ Contactor K1 (main) via auxiliary contacts of K3 and K5	▶ *Check-back = Auxiliary contacts*
	▶ *DI2 Multi-function input = 001*
▶ Fault lamp at output DO2	▶ *Local operation via DIs = On, 002, 003 or 004*
▶ Check-back by aux.contacts (DI0, DI1)	▶ *Set current 1*
▶ DI0, DI1, DI2 = Multi-function inputs e.g. fault or stop inputs when parameterized	▶ Overload protection parameters
	▶ *Address* via Control Panel or Addressing Set
▶ Local operation via inputs DI4 and DI5	

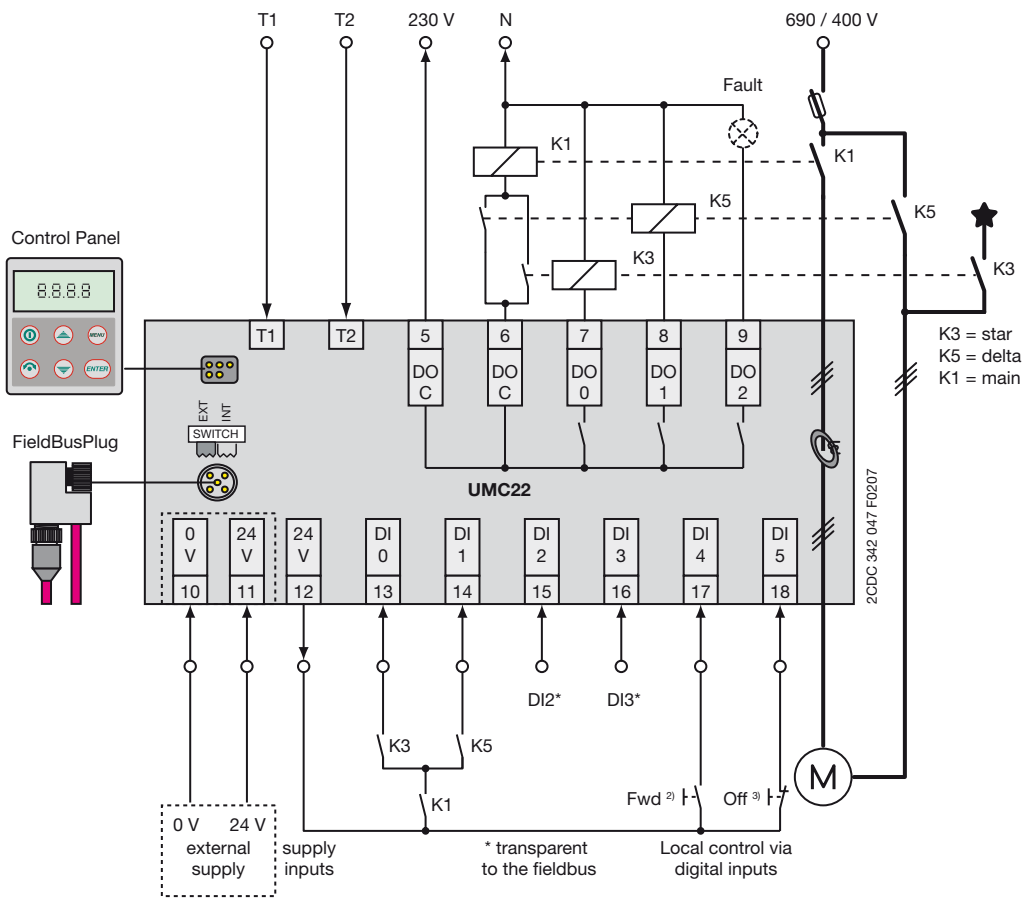

1) Multi-function input DI2 as fault input: 0 = fault (closed circuit signal)
2) Fwd: Momentary-contact switch (On)
3) Off: 0 = dominating Off (closed circuit signal)

Illustration 8-13: UMC22-FBP: Control function = Star-delta starter 1 - (Extended circuit)

Remark: For this case of motor wiring the set current must be set to 58% of the nominal motor current (3.2.3 and 5.3.4).

8.5.2 Description

With *Star-delta starter 2* the outputs DO0 (star) and DO1 (delta) are defined to drive the motor contactor coils. The main contactor is controlled via auxiliary contacts of the star and delta contactors.

Once the motor is started with RUN FORWARD the star-delta-sequence is controlled automatically by the UMC22.

8.5.2.1 Attached control functions (5.3.1)

The parameter set Attached control functions prepare the star-delta starter 1 to support different circuit arrangements including the use of inputs and outputs for particular use.

Examples:

Star-delta changeover mode (5.3.4)

- *Star-delta changeover mode* = *Current* (default):
  The UMC22 switches from star to delta when the current decreases under 90% of the set current. Additional the parameterizable *Star-delta starting time* (default 60 s) is started. If this time has elapsed the UMC22 must be in delta mode otherwise Current check-back fault is signalled and the motor is stopped.
- *Star-delta changeover mode* = *Time*:
  The UMC22 switches after the parameterizable *Star-delta starting time* (default 60 s).
  The transition time star to delta is fixed 50 ms after current is 0 or auxiliary contacts are open resp.

Fault output (5.3.4)

Activate via Parameter *Fault output* = *On*:
If a fault appears
- the output contact DO2 closes and
- the internal fault signal is set.

Multi-function inputs DI0, DI1 and DI2 (4.3.4)

Depending of the parameterization of the parameters *DI0 Multi-function input*, *DI1 Multi-function input* and *DI2 Multi-function input* the following functions are possible:

- *Transparent* (default): status is monitored only to the fieldbus
- *Fault signal always / not delayed or delayed* with 1 to 255 s:
  The delay time starts whether the motor is running or not.
- *Fault signal dependent / delayed* with 1 to 255 s:
  The delay time starts only when the motor is running.
- *Motor off always / not delayed or delayed* with 1 to 255 s:
  The delay time starts whether the motor is running or not.
- *Motor off dependent / delayed* with 1 to 255 s:
  The delay time starts only when the motor is running.
- *Reset internal fault signal*
- *Test* → Start without motor (no current check-back when started)

Remark:

- DI0, DI1 and DI2 can be parametrized via fieldbus. Only DI2 can be parametrized via Control Panel.
- Setting *Check-back* = *Auxiliary contacts* and *DI0 Multi-function input* = *not 000* give the input DI0 two colliding tasks.
  As a result the internal fault signal is set and monitored via different ways, e.g. Parameter out of range / F004 (5.2.1). The motor cannot be started.
- DI0: can not be parameterized as Fault signal not delayed (reason: compatibility to older versions)

Local control via digital inputs (5.3.4)

Activate via parameter *Local operation via DIs* = *On*, *002*, *003* or *004*:
- DI4 to start the motor, only via active signal possible
- DI5 to stop the motors, depending on the parameterization via closed circuit or active signal possible

Remark:
A simplified local control is possible via Control Panel (*Direct panel control*):
Start, stop and fault reset.

Further functions (5.3.1)

Other parameters define the protection behaviour and additional functions.

8.5.2.2 Starting

Selection and activation of the control function

The control function can be set via LCD-panel or fieldbus and is taken over, if the motor is off.
If the configuration was changed in the control system, it must be downloaded to the UMC22 before it can be used.

Remark:
Most of the bus masters download / overwrite all parameters during power-up of the bus master or the UMC22. It may seem that the change of parameters via Control Panel is not effective.

Start of the motor

After activation of the selected control function the motor can be started with the bus command RUN FORWARD or via local control.

Depending on the parameter *Star-delta changeover mode* the mode changes from star to delta:

- *Star-delta changeover mode* = *Current* (Default): Changeover within the *Star-delta changeover time* is requested otherwise the Current check-back fault is generated.
- *Star-delta changeover mode* = *Time*: Changeover after the *Star-delta changeover time* independent of the actual current.

8.5.2.3 Check-back (5.3.4)

When the motor is started the check-back status is expected within 300 ms, otherwise a fault is detected. Selectable by parameter, current or auxiliary contact signal can serve as check-back status.

DI0 and DI1 can not operate as Multi-function inputs when *Check-back* = *Auxiliary Contacts* is selected.

Remark:
Check-back = *Simulation* is recommended only to be set via Control Panel during commissioning. The control system must only set *Auxiliary contacts* or *Motor current* to guarantee that the check-back operates correctly after next power on.

7.5.2.4 Fault behaviour

All kinds of detected external and internal faults set the internal fault bit. In the following:

- ▶ contact DO0 (or DO1 resp.) for the contactor coil opens,
- ▶ the monitoring signal FAULT is sent to the fieldbus,
- ▶ the red LED lights on and
- ▶ the FAULT signal on the Control Panel display flashes.
- ▶ If parameterized the output DO2 switches on.

If a motor overload is the cause of the fault signal, the cooling time is started additionally . The *Cooling time* is a parameter and can be adjusted. The running cooling time is shown on the Control Panel with "°C".

All faults (except communication fault) must be acknowledged via fieldbus (5.2.1), via Control Panel (9.1.3) or if parameterized via multi-function inputs (5.3.4) to allow to start the motor.
Additional the cooling time (5.3.4) must have elapsed to allow to restart the motor with a 0→1 transition of the RUN command (5.2.1).

More detailed information are monitored in the diagnosis telegram (5.2.1) and on the Control Panel (9.2.1).

7.5.2.5 Addressing (3.3.1)

The slave address of the UMC22-FieldBusPlug combination is not a parameter but can be set with Control Panel (9.2.2) or with separate Addressing Set.

Important!

The inputs and the internal electronic circuits are supplied normally by the FieldBusPlug "internally" (SWITCH to INT). Internal supply is also allowed for contacts next to the UMC22, when the 24 V wiring can be surveyed easily.

If distant contacts or sensors are connected, an external supply (SWITCH to EXT) must be used to avoid that an external short circuit paralyses the fieldbus (3.2.1).

8.5.3 Interface and data overview

Hardware Inputs / Outputs

Terminal	13	14	15	16	17	18
Device input (to bus)	DI0 [1] (aux. contact)	DI1	DI2 [1] (ext. fault)	DI3	DI4 [1] (local: Fwd)	DI5 [1] (local: Off)
Terminal	7	8	9			
Device output (from bus)	Star	Delta	DO2 [1] (Fault output)			

Monitoring telegram, digital

Bit No.	7	6	5	4	3	2	1	0
Byte 0	WARNING	FAULT	LOCAL CONTROL	-	-	RUN FORWARD	OFF	-
Byte 1	DI5 [1] (UMC input)	DI4 [1] (UMC input)	DI3 (UMC input)	DI2 [1] (UMC input)	DI1 [1] (UMC input)	DI0 [1] (UMC input)	-	-

Monitoring telegram, analog

Byte 0 and Byte 1: Motorcurrent in % of set current

Command telegram, digital only

Bit No.	7	6	5	4	3	2	1	0
Byte 0	-	FAULT RESET	AUTO MODE	-	SELF TEST	RUN FORWARD	OFF	-
Byte 1	DO2 [1] (UMC output)	-	-	-		-	-	-

Diagnosis telegram

Bit No.	7	6	5	4	3	2	1	0
Fault Byte 0	-	Self test failed F010 [2]	Fault signal on DI0, DI1 or DI2 [1] F011 [2]	-	-	-	-	-
Fault Byte 1	Overload (trip) fault trip [2]	Motor blocked F002 [2]	Communi-cation fault F003 [2]	Parameter out of range F004 [2]	Current check-back fault [1] F005 [2]	-	Relay 1 check-back fault [1] F007 [2]	Relay 0 check-back fault [1] F008 [2]
Warning Byte 2	Motor current high threshold [1]	Motor current low threshold [1]	-	Cooling time running °C [2]	-	Self test running buSy [2]	-	-
Warning Byte 3	If Parameter out of range: Pamameter number (leading two stages of the parameter, e.g. "02" Current factor) If Self test fauled: Self test error number (only for service) In all other cases:							
	-	Fault on DI2 F024 [2]	Faut on DI1 F023 [2]	Fault on DI0 F022 [2]	Earth fault F020 [2]	PTC short-circuit F019 [2]	PTC wire break F018 [2]	PTC temperature F017 [2]

[1] depending on parameterization [2] displayed on the Control Panel Busdata details see 5.2.2.

8.5.4 Timing diagrams

8.5.4.1 Star-delta start 1

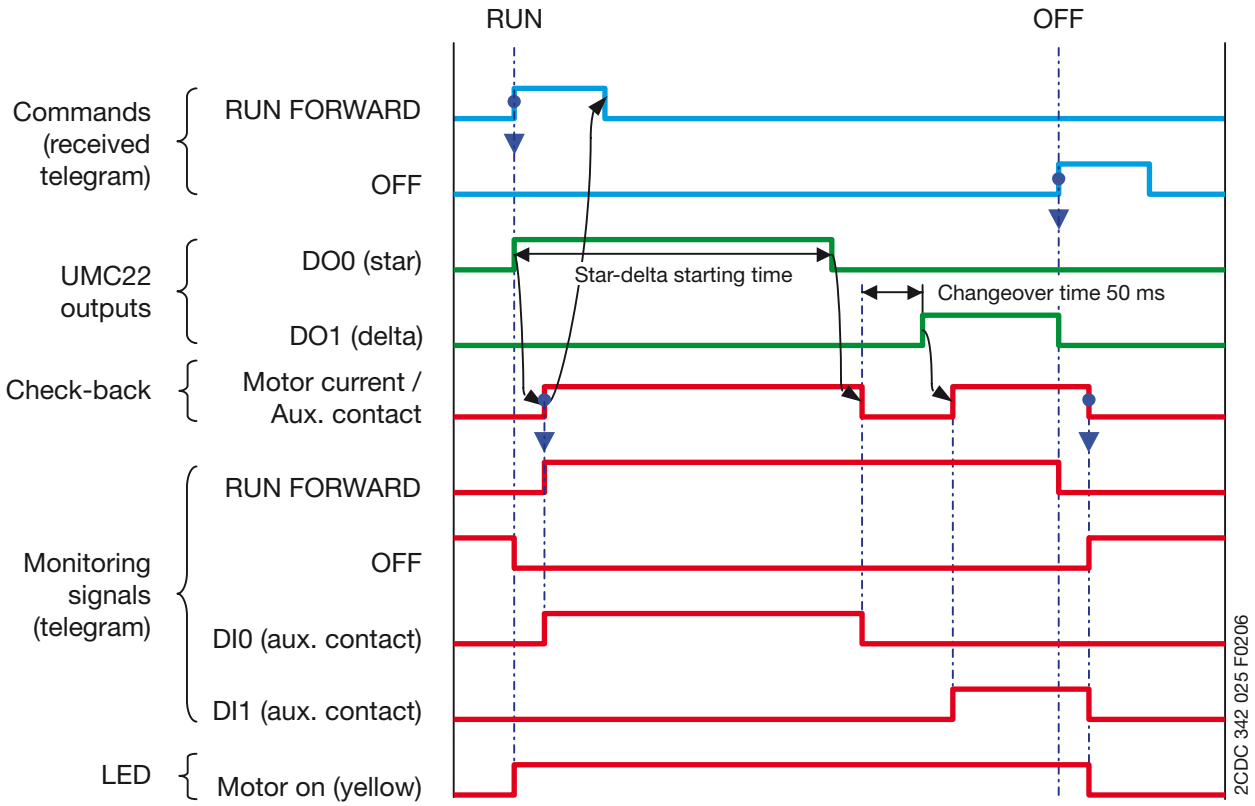

Illustration 8-14: UMC22-FBP: Control function = Star-delta starter 1 - Timing diagram star-delta start

8.5.4.3 Overload

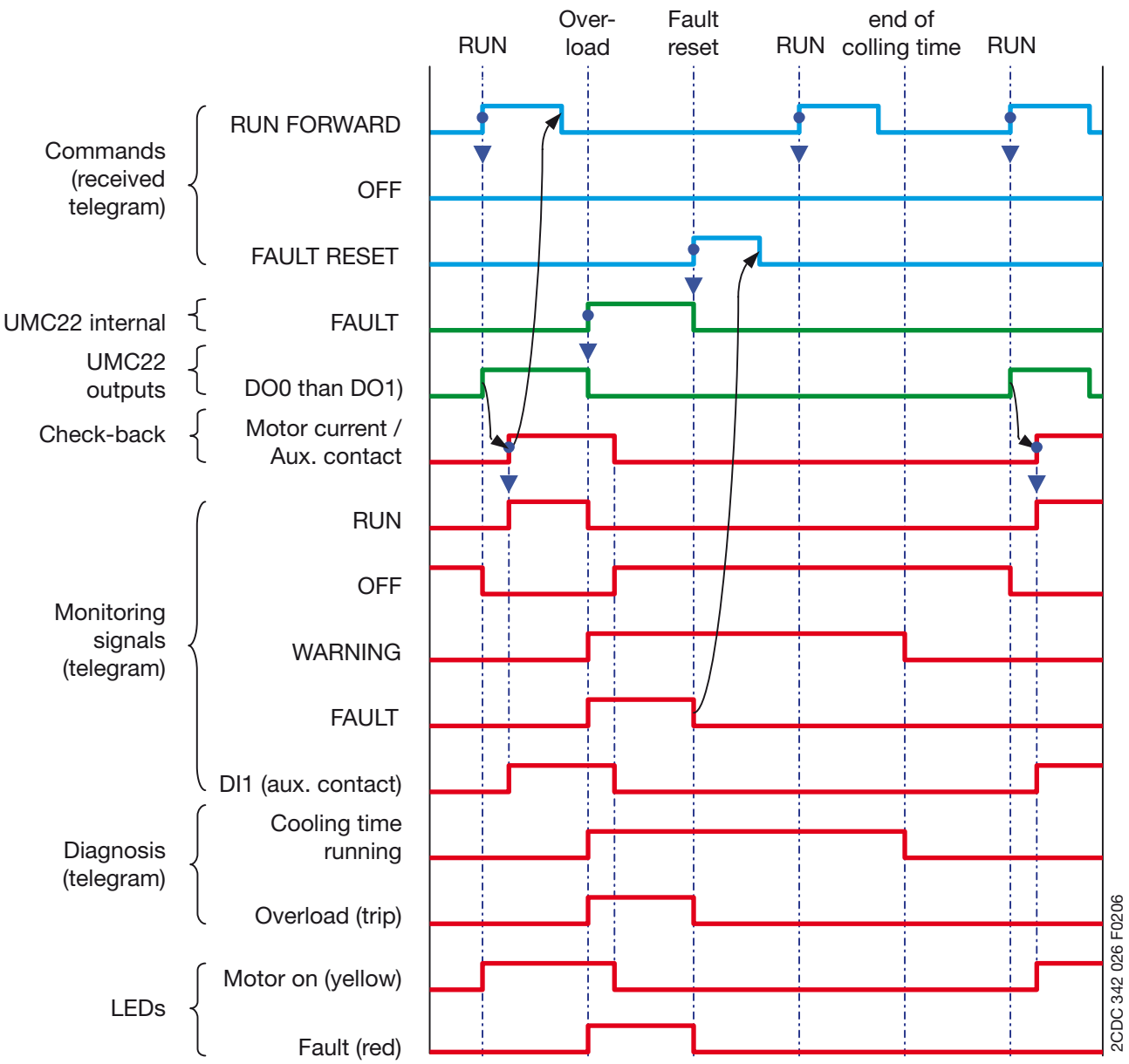

Illustration 8-15: UMC22-FBP: Control function = Star-delta starter 1 - Timing diagram overload

8.6 Star-delta starter 2

The UMC22 parameterized with the *Control function = Star-delta starter 2* provides excellent protection and control of a motor for one direction of rotation including the time or current controlled star-delta transition.
The connection to a fieldbus is made via the appropriate type of the FieldBusPlug.

Differences to control function Star-delta starter 1:
- For Star-delta starter 2 the number of switching cycles is the same for all 3 relais.
- Control function Star-delta starter 2 does not offern a fault output.

8.6.1 Circuit diagram

8.6.1.1 Basic circuit

Main features	**Parameters to be changed** (5.3.4) **(based on default)**
▶ Contactor K3 (star) at output DO0	▶ *Control function = Star-delta starter 2*
▶ Contactor K5 (delta) at output DO1	▶ *Set current 1*
▶ Contactor K1 (main) via DO2	▶ Overload protection parameters
▶ Check-back by current	▶ *Address* via Control Panel or Addressing Set

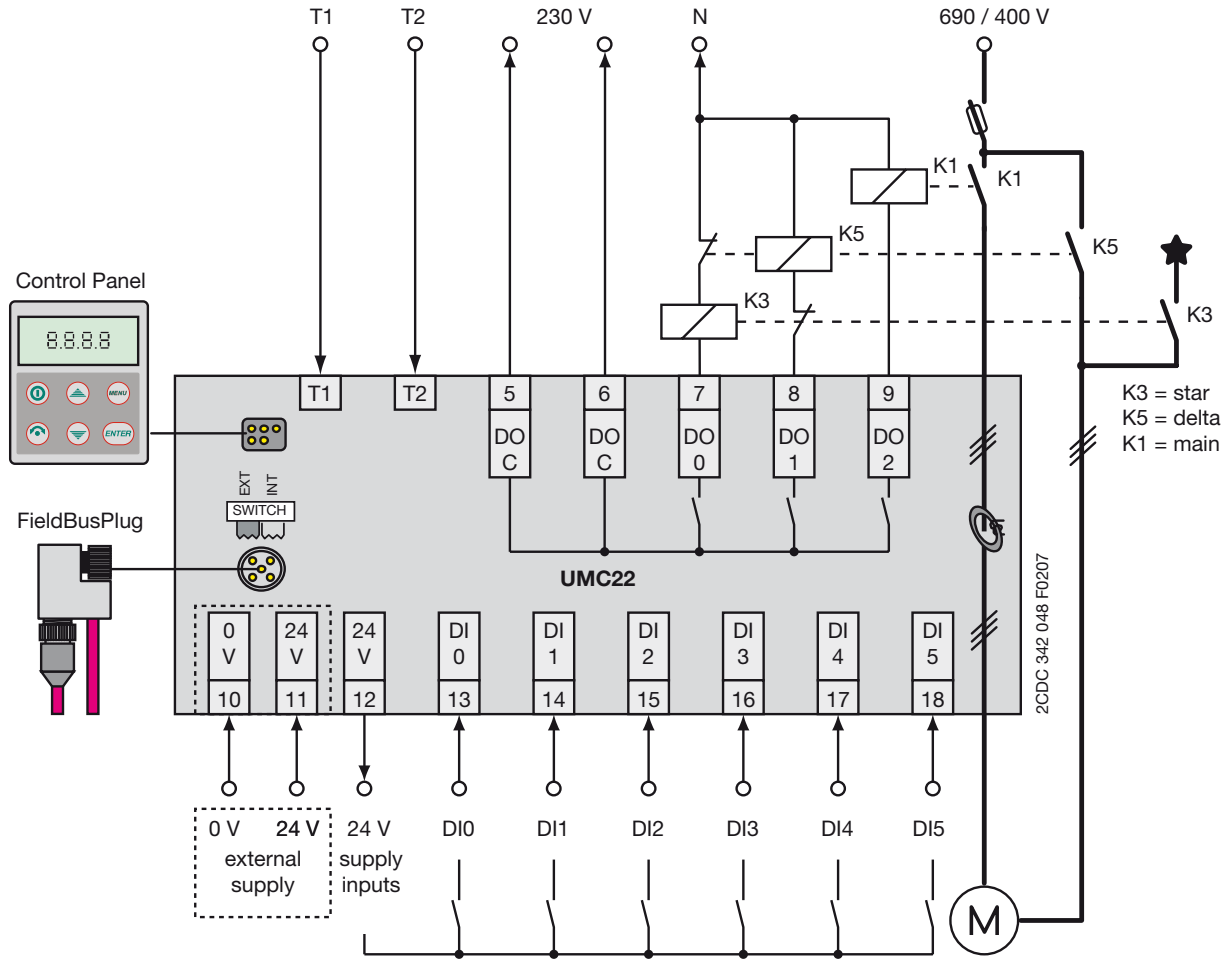

Illustarion87-16: UMC22-FBP: Control function = Star-delta starer 2 (Basic circuit)

Remark: In this circuit diagram inner delta wiring of the motor is used. The current factor should be set to 1,73 (3.2.3 and 5.3.4).

8.6.1.2 Extended circuit

Main features	**Parameters to be changed** (5.3.4) **(based on default)**
▶ Contactor K3 (star) at output DO0	▶ *Control function = Star-delta starter 2*
▶ Contactor K5 (delta) at output DO1	▶ *Fault output = Off*
▶ Contactor K1 (main) via DO2	▶ *Check-back = Auxiliary contacts*
▶ Check-back by aux.contacts (DI0, DI1)	▶ *DI2 Multi-function input = 001*
▶ DI0, DI1, DI2 = Multi-function inputs e.g. fault or stop inputs when parameterized	▶ *Local operation via DIs = On, 002, 003 or 004*
	▶ *Set current 1*
▶ Local operation via inputs DI4 and DI5	▶ Overload protection parameters
	▶ *Address* via Control Panel or Addressing Set

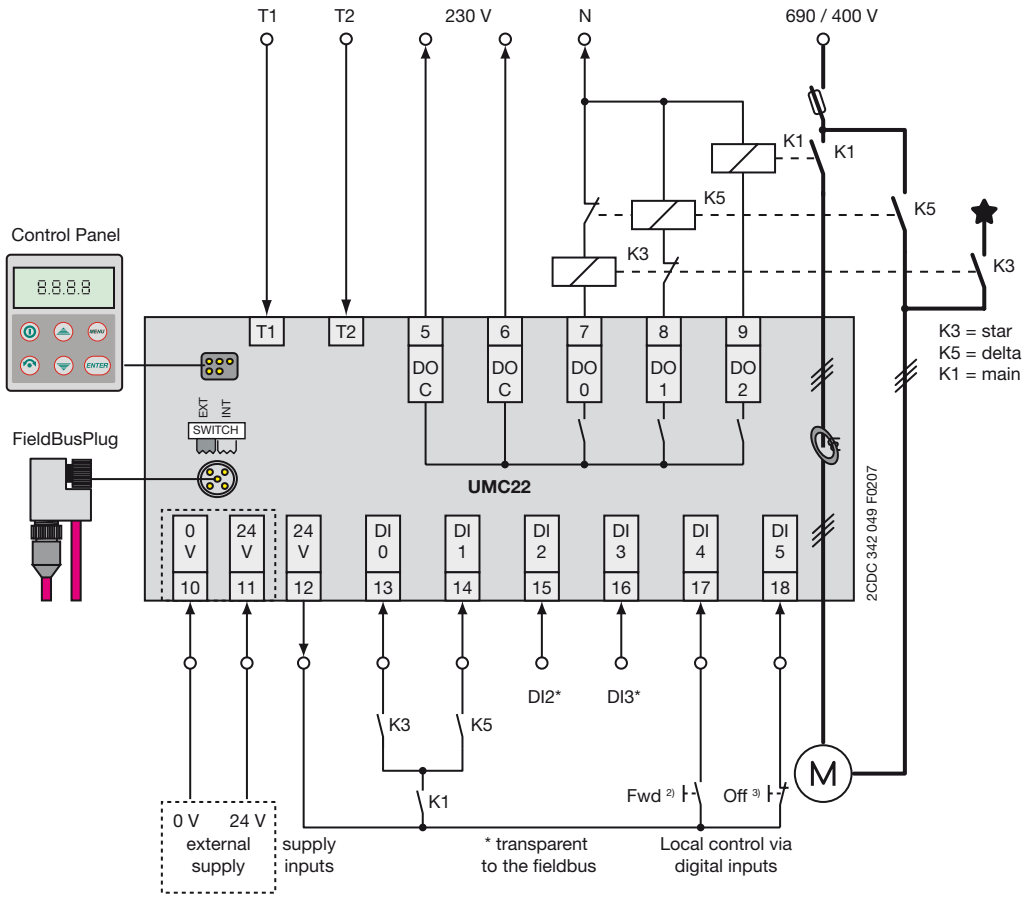

1) Multi-function input DI2 as fault input: 0 = fault (closed circuit signal)
2) Fwd: Momentary-contact switch (On)
3) Off: 0 = dominating Off (closed circuit signal)

Illustration 8-17: UMC22-FBP: Control function = Star-delta starter 2 - (Extended circuit)

Remark: For this case of motor wiring the set current must be set to 58% of the nominal motor current (3.2.3 and 4.3.4).

8.6.2 Description

With *Star-delta starter 2* the outputs DO0 (star), DO1 (delta) and DO2 (main) are defined to drive the motor contactor coils.

Once the motor is started with RUN FORWARD the star-delta-sequence is controlled automatically by the UMC22.

8.6.2.1 Attached control functions (5.3.1)

The parameter set Attached control functions prepare the star-delta starter 1 to support different circuit arrangements including the use of inputs and outputs for particular use.

Examples:

Star-delta changeover mode (5.3.4)

- *Star-delta changeover mode* = *Current* (default):
  The UMC22 switches from star to delta when the current decreases under 90% of the set current. Additional the parameterizable *Star-delta starting time* (default 60 s) is started. If this time has elapsed the UMC22 must be in delta mode otherwise Current check-back fault is signalled and the motor is stopped.
- *Star-delta changeover mode* = *Time*:
  The UMC22 switches after the parameterizable *Star-delta starting time* (default 60 s).
  The transition time star to delta is fixed 50 ms after current is 0 or auxiliary contacts are open resp.

Multi-function inputs DI0, DI1 and DI2 (4.3.4)

Depending of the parameterization of the parameters *DI0 Multi-function input*, *DI1 Multi-function input* and *DI2 Multi-function input* the following functions are possible:

- *Transparent* (default): status is monitored only to the fieldbus
- *Fault signal always* / *not delayed or delayed* with 1 to 255 s:
  The delay time starts whether the motor is running or not.
- *Fault signal dependent* / *delayed* with 1 to 255 s:
  The delay time starts only when the motor is running.
- *Motor off always* / *not delayed or delayed* with 1 to 255 s:
  The delay time starts whether the motor is running or not.
- *Motor off dependent* / *delayed* with 1 to 255 s:
  The delay time starts only when the motor is running.
- *Reset internal fault signal*
- *Test* → Start without motor (no current check-back when started)

Remark:

- DI0, DI1 and DI2 can be parametrized via fieldbus. Only DI2 can be parametrized via Control Panel.
- Setting *Check-back* = *Auxiliary contacts* and *DI0 Multi-function input* = *not 000* give the input DI0 two colliding tasks.
  As a result the internal fault signal is set and monitored via different ways, e.g. Parameter out of range / F004 (5.2.1). The motor cannot be started.
- DI0: can not be parameterized as Fault signal not delayed (reason: compatibility to older versions)

Local control via digital inputs (5.3.4)

Activate via parameter *Local operation via DIs* = *On*, *002*, *003* or *004*:
- DI4 to start the motor, only via active signal possible
- DI5 to stop the motors, depending on the parameterization via closed circuit or active signal possible

Remark:
A simplified local control is possible via Control Panel (*Direct panel control*):
Start, stop and fault reset.

Further functions (5.3.1)

Other parameters define the protection behaviour and additional functions.

8.6.2.2 Starting

Selection and activation of the control function

The control function can be set via LCD-panel or fieldbus and is taken over, if the motor is off.
If the configuration was changed in the control system, it must be downloaded to the UMC22 before it can be used.

Remark:
Most of the bus masters download / overwrite all parameters during power-up of the bus master or the UMC22. It may seem that the change of parameters via Control Panel is not effective.

Start of the motor

After activation of the selected control function the motor can be started with the bus command RUN FORWARD or via local control.

Depending on the parameter *Star-delta changeover mode* the mode changes from star to delta:

- *Star-delta changeover mode* = *Current* (Default): Changeover within the *Star-delta changeover time* is requested otherwise the Current check-back fault is generated.
- *Star-delta changeover mode* = *Time*: Changeover after the *Star-delta changeover time* independent of the actual current.

8.6.2.3 Check-back (5.3.4)

When the motor is started the check-back status is expected within 300 ms, otherwise a fault is detected. Selectable by parameter, current or auxiliary contact signal can serve as check-back status.

DI0 and DI1 can not operate as Multi-function inputs when *Check-back* = *Auxiliary Contacts* is selected.

Remark:
Check-back = *Simulation* is recommended only to be set via Control Panel during commissioning. The control system must only set *Auxiliary contacts* or *Motor current* to guarantee that the check-back operates correctly after next power on.

8.6.2.4 Fault behaviour

All kinds of detected external and internal faults set the internal fault bit. In the following:

- contact DO0 (or DO1 or DO2 resp.) for the contactor coil opens,
- the monitoring signal FAULT is sent to the fieldbus,
- the red LED lights on and
- the FAULT signal on the Control Panel display flashes.
- If parameterized the output DO2 switches on.

If a motor overload is the cause of the fault signal, the cooling time is started additionally . The *Cooling time* is a parameter and can be adjusted. The running cooling time is shown on the Control Panel with "°C".

All faults (except communication fault) must be acknowledged via fieldbus (5.2.1), via Control Panel (9.1.3) or if parameterized via multi-function inputs (5.3.4) to allow to start the motor.
Additional the cooling time (5.3.4) must have elapsed to allow to restart the motor with a 0→1 transition of the RUN command (5.2.1).

More detailed information are monitored in the diagnosis telegram (5.2.1) and on the Control Panel (9.2.1).

8.6.2.5 Addressing (3.3.1)

The slave address of the UMC22-FieldBusPlug combination is not a parameter but can be set with Control Panel (9.2.2) or with separate Addressing Set.

Important!

The inputs and the internal electronic circuits are supplied normally by the FieldBusPlug "internally" (SWITCH to INT). Internal supply is also allowed for contacts next to the UMC22, when the 24 V wiring can be surveyed easily.

If distant contacts or sensors are connected, an external supply (SWITCH to EXT) must be used to avoid that an external short circuit paralyses the fieldbus (3.2.1).

8.6.3 Interface and data overview

Hardware Inputs / Outputs

Terminal	13	14	15	16	17	18
Device input (to bus)	DI0 [1] (Multifunction input / Check-back)	DI1 (Multifunction input / Check-back)	DI2 [1] (Multifunction input)	DI3	DI4 [1] (local: Fwd)	DI5 [1] (local: Off)
Terminal	7	8	9			
Device output (from bus)	Star	Delta	Main			

Monitoring telegram, digital

Bit No.	7	6	5	4	3	2	1	0
Byte 0	WARNING	FAULT	LOCAL CONTROL	-	-	RUN FORWARD	OFF	-
Byte 1	DI5 [1] (UMC input)	DI4 [1] (UMC input)	DI3 (UMC input)	DI2 [1] (UMC input)	DI1 [1] (UMC input)	DI0 [1] (UMC input)	-	-

Monitoring telegram, analog

Byte 0 and Byte 1: Motorcurrent in % of set current

Command telegram, digital

Bit No.	7	6	5	4	3	2	1	0
Byte 0	-	FAULT RESET	AUTO MODE	-	SELF TEST	RUN FORWARD	OFF	-
Byte 1	-	-	-	-		-	-	-

Diagnosis telegram

Bit No.	7	6	5	4	3	2	1	0
Fault Byte 0	-	Self test failed F010 [2]	Fault signal on DI0, DI1 or DI2 [1] F011 [2]	-	-	-	-	-
Fault Byte 1	Overload (trip) fault trip [2]	Motor blocked F002 [2]	Communi-cation fault F003 [2]	Parameter out of range F004 [2]	Current check-back fault [1] F005 [2]	-	Relay 1 check-back fault [1] F007 [2]	Relay 0 check-back fault [1] F008 [2]
Warning Byte 2	Motor current high threshold [1]	Motor current low threshold [1]	-	Cooling time running °C [2]	-	Self test running buSy [2]	-	-
Warning Byte 3	If Parameter out of range: Pamameter number (leading two stages of the parameter, e.g. "02" Current factor) If Self test fauled: Self test error number (only for service) In all other cases:							
	-	Fault on DI2 F024 [2]	Faut on DI1 F023 [2]	Fault on DI0 F022 [2]	Earth fault F020 [2]	PTC short-circuit F019 [2]	PTC wire break F018 [2]	PTC temperature F017 [2]

[1] depending on parameterization [2] displayed on the Control Panel Busdata details see 5.2.2.

8.6.4 Timing diagrams

8.6.4.1 Star-delta start 2

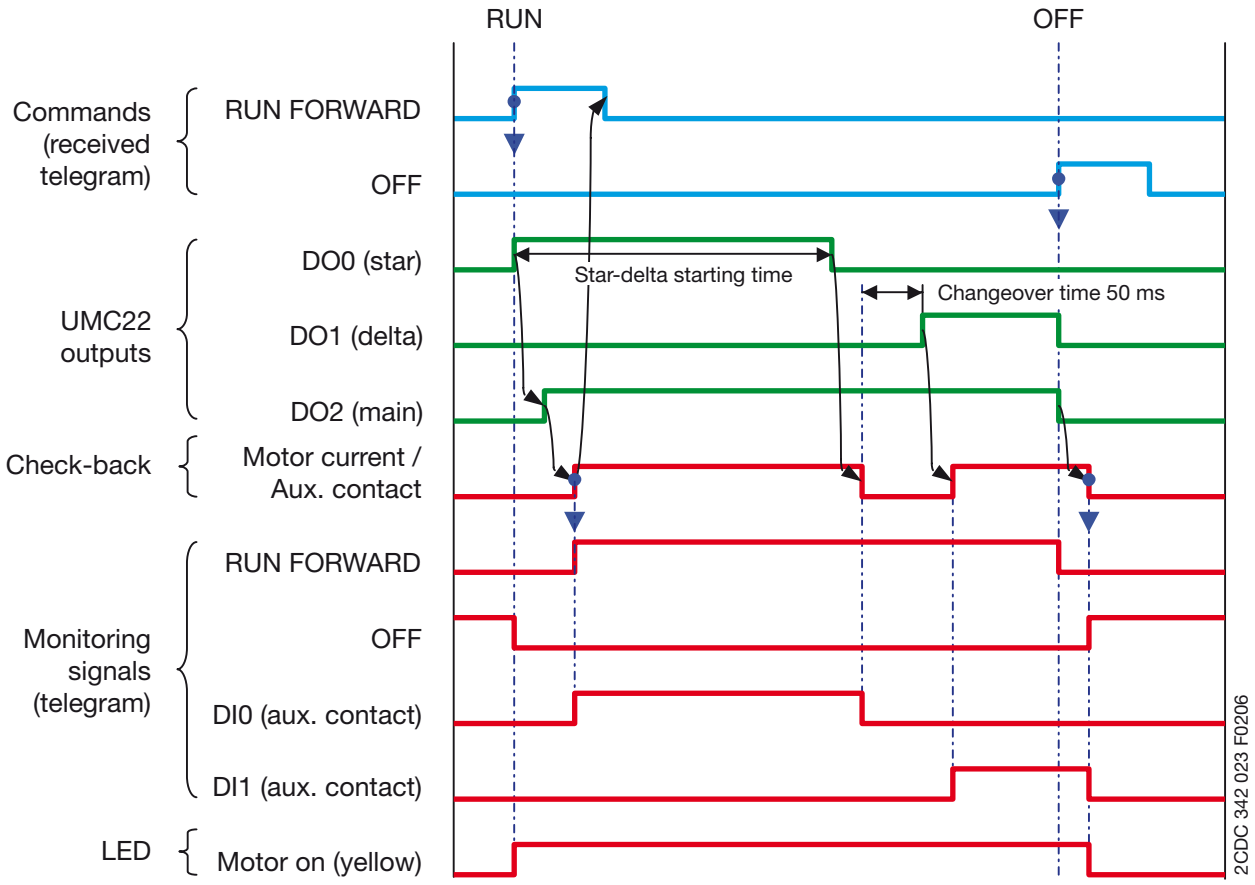

Illustration 8-18: UMC22-FBP: Control function = Star-delta starter 1 - Timing diagram star-delta start

8.6.4.3 Overload

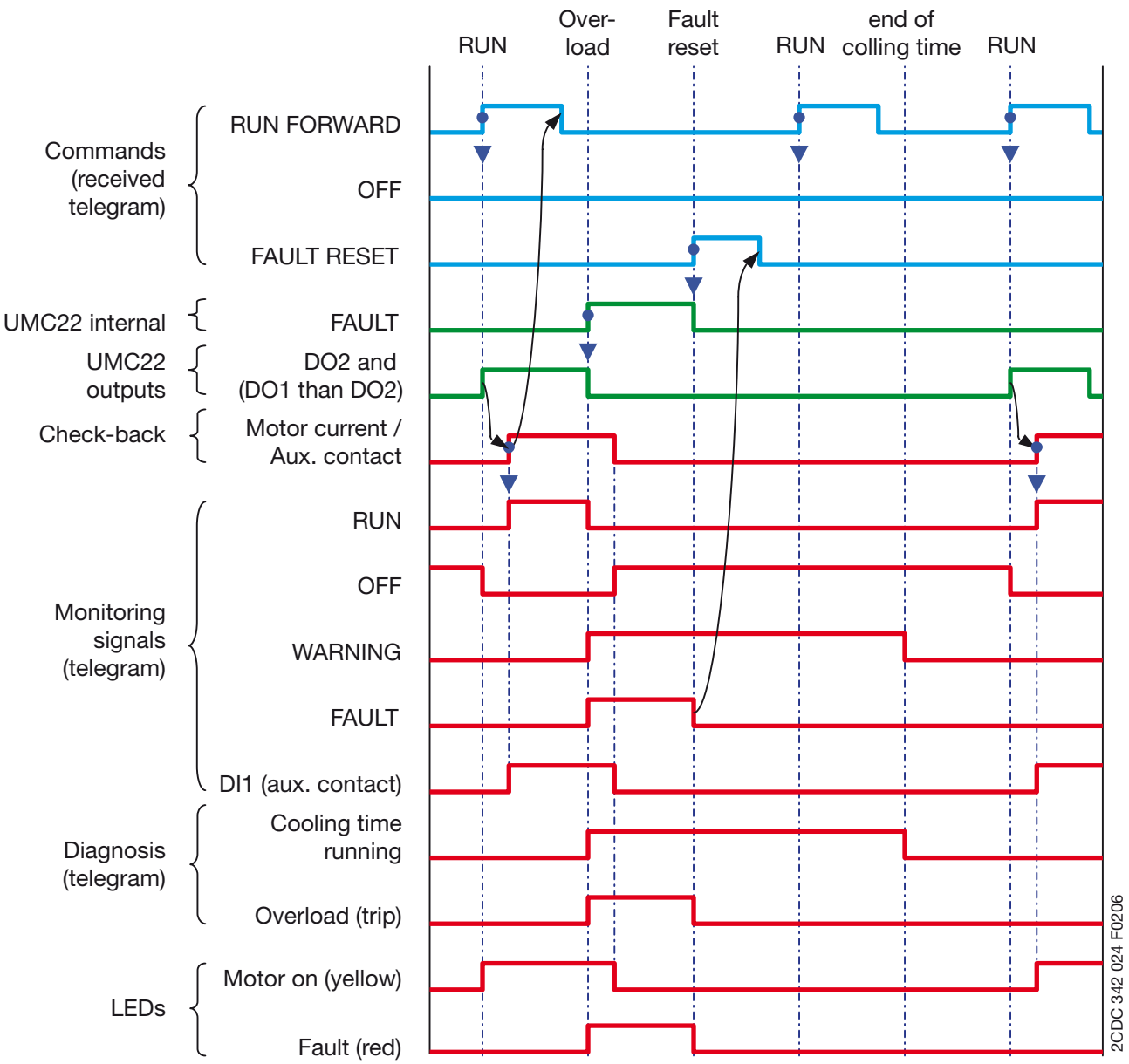

Illustration 8-19: UMC22-FBP: Control function = Star-delta starter 1 - Timing diagram overload

8.7 Pole-changing starter 1

The UMC22 parametrized with the *Control function = Pole-changing starter 1* provides excellent protection and control of a Two-pole or Dahlander motor for one direction of rotation. The change from one speed to the other is possible immediately.

The connection to a fieldbus is made via FieldBusPlug.

8.7.1 Circuit diagrams

8.7.1.1 Basic circuit - Two-Pole Motor

Main features	**Parameters to be changed** (5.3.4) **(based on default)**
▶ Contactor K81 at output DO0	▶ *Control function = Pole-changing starter 1*
▶ Contactor K91 at output DO1	▶ *Set current 1* and *Set current 2*
▶ Check-back by current	▶ Overload protection parameters
	▶ *Address* via Control Panel or Addressing Set

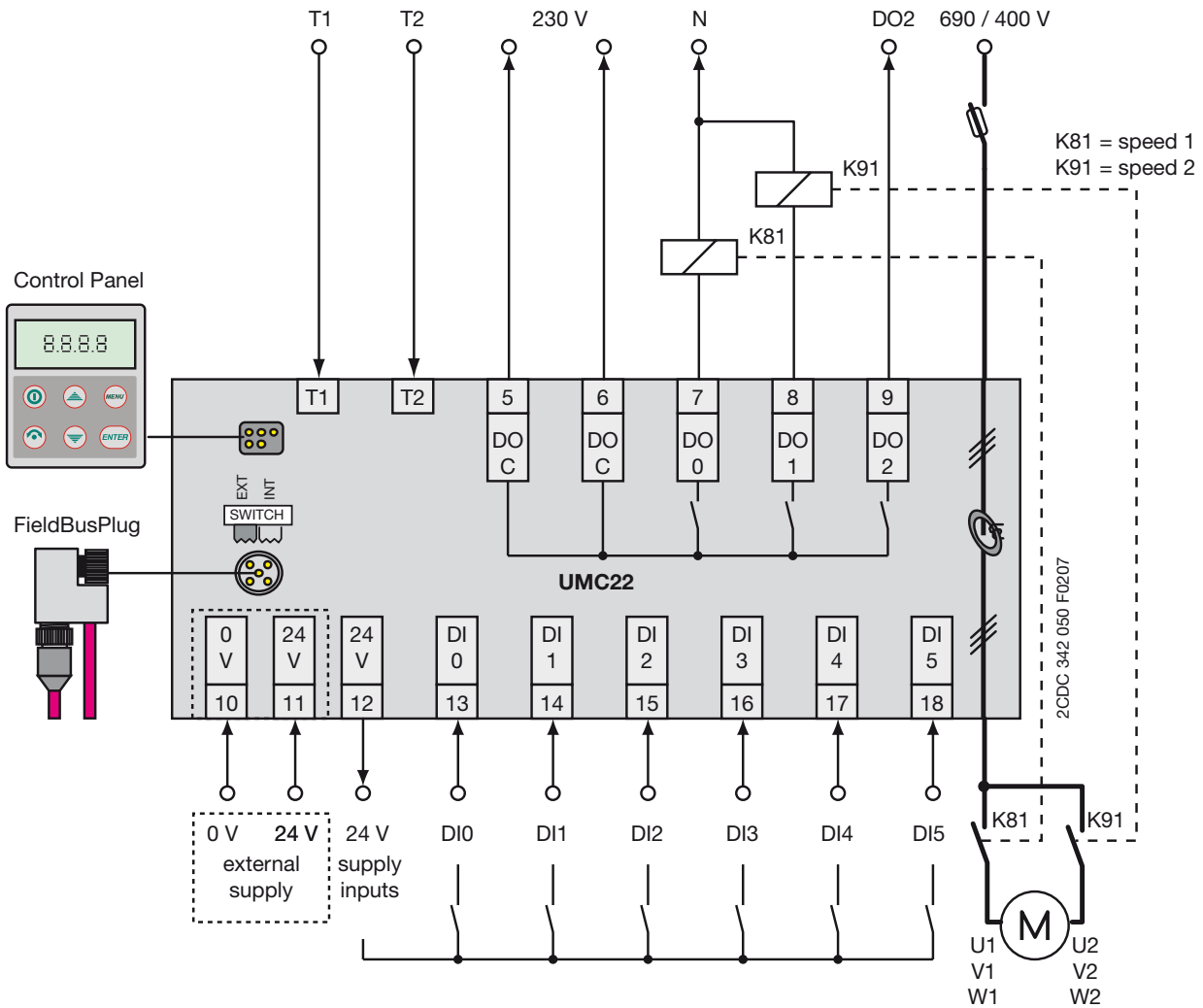

Illustration 8-20: UMC22-FBP: Control function = Pole-changing starter 1 - Two-pole motor (Basic circuit)

8.7.1.2 Extended circuit - Two-Pole Motor

Main features	**Parameters to be changed** (5.3.4) **(based on default)**
▶ Contactor K81 at output DO0	▶ *Control function = Pole-changing starter 1*
▶ Contactor K91 at output DO1	▶ *Fault output = On*
▶ Fault lamp at output DO2	▶ *Check-back = Auxiliary contacts*
▶ Check-back by aux.contacts on DI0	▶ *DI2 Multi-function input = 001*
▶ DI0, DI1, DI2 = Multi-function inputs e.g. Fault or stop inputs when parametrized	▶ *Local operation via DIs = On, 002, 003* or *004*
	▶ *Set current 1* and *Set current 2*
▶ Local operation via inputs DI4 and DI5	▶ Overload protection parameters
	▶ *Address* via Control Panel or Addressing Set

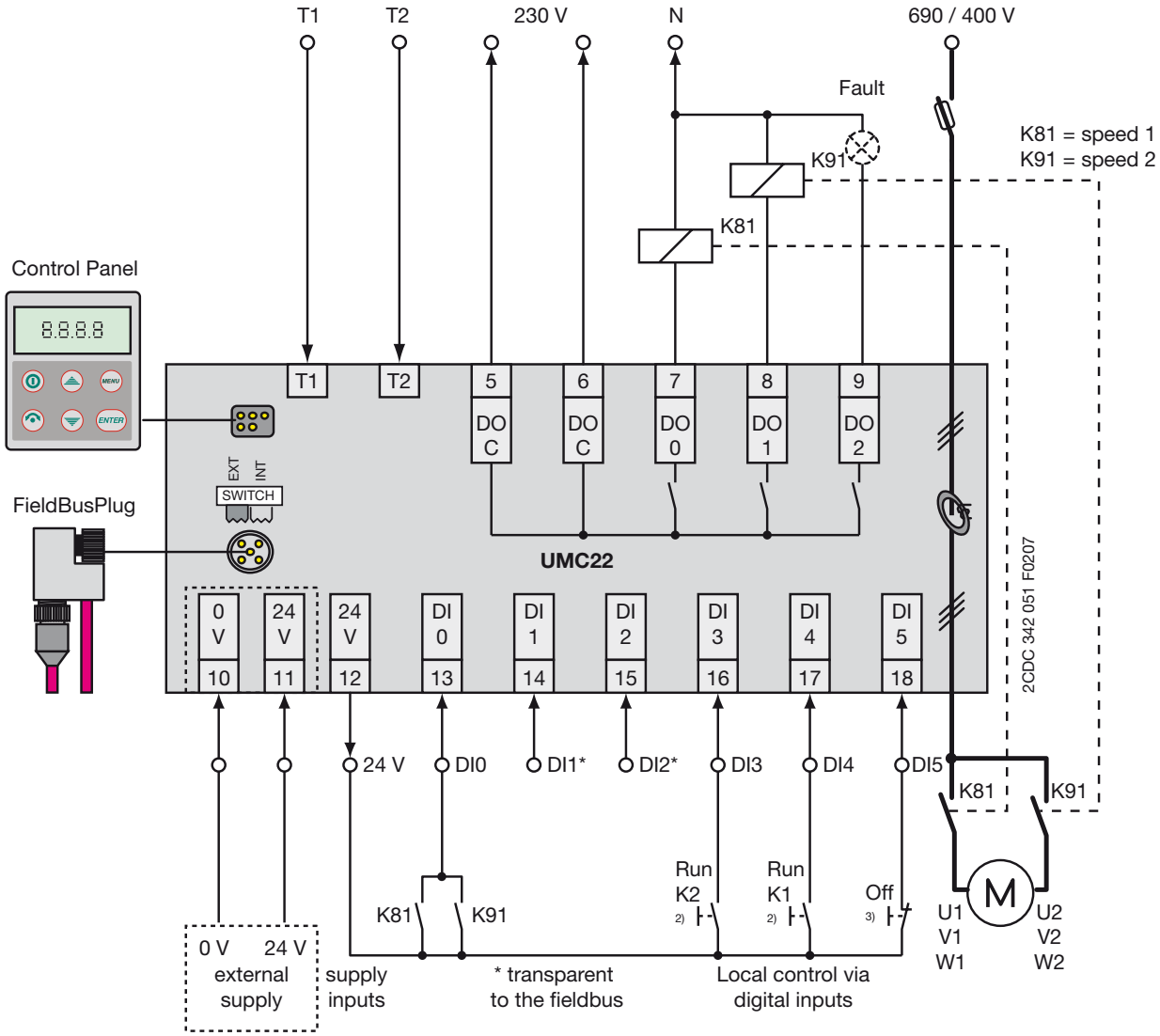

[1] Multi-function input as Fault input: 0 = fault (0 V signal)
[2] Run A, Run B: Momentary-contact switch (On)
[3] Off: 0 = dominating Off (closed-circuit signal)

Illustartion 8-21: UMC22-FBP: Control function = Pole-changing starter 1 - Two-pole motor (Extended circuit)

8.7.1.3 Basis circuit - Dahlander Motor

Main features	**Parameters to be changed** (5.3.4) **(based on default)**
▶ Contactor K81 at output DO0	▶ *Control function* = *Pole-changing starter 1*
▶ Contactor K291b at output DO1	
▶ Contactor K91a via auxiliary contact of contactor K91b	▶ *Set current 1* and *Set current 2*
	▶ Overload protection parameters
▶ Check-back by current	▶ *Address* via Control Panel or Addressing Set

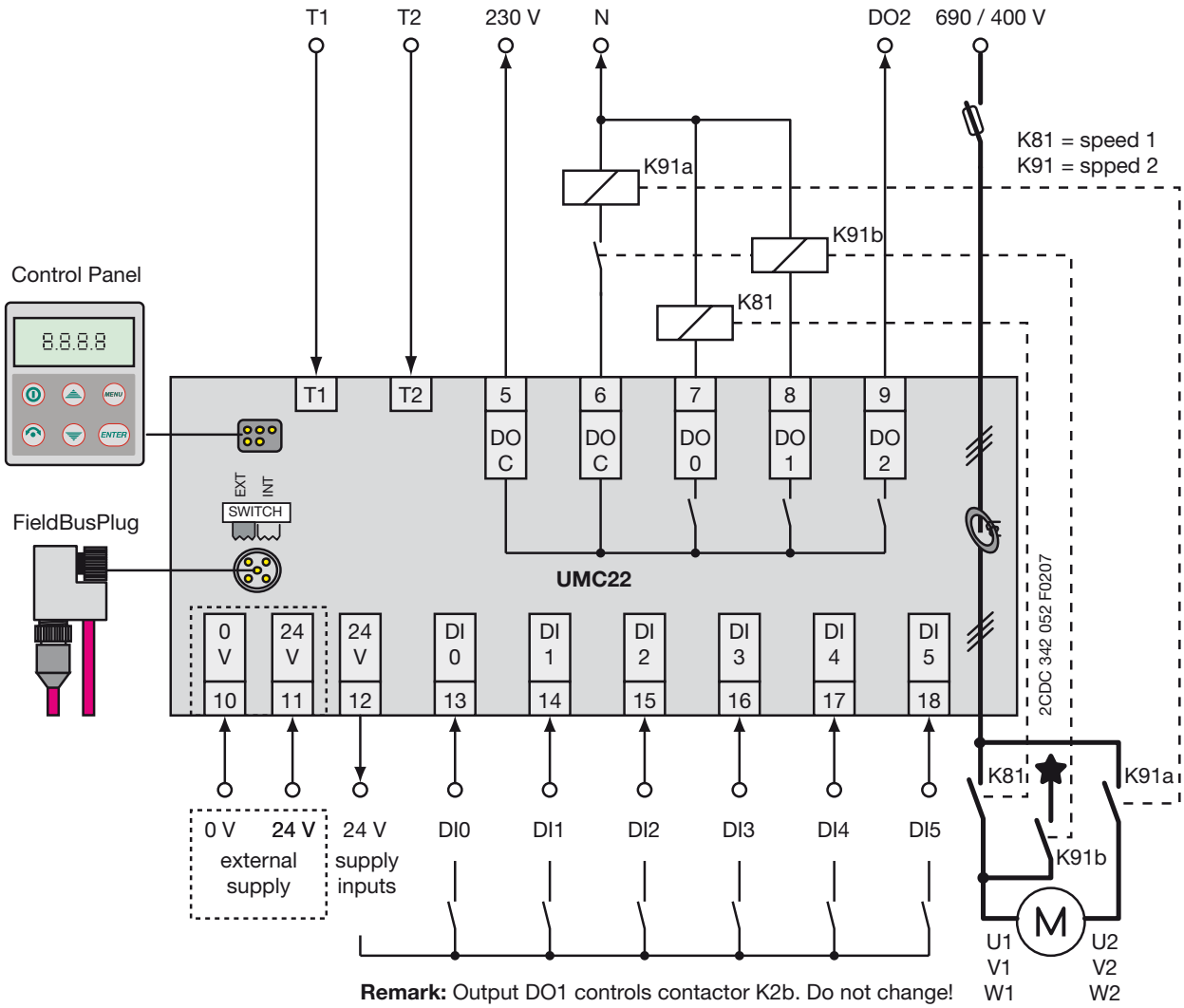

Illustartion 8-22: UMC22-FBP: Control function = Pole-changing starter 1 - Dahlander-Motor (Basic circuit)

8.7.1.4 Extended circuit - Dahlander Motor

Main features	Parameters to be changed (5.3.4) (based on default)
▶ Contactor K81 at output DO0	▶ *Control function = Pole-changing starter 1*
▶ ContactorK91b at output DO1	▶ *Fault output = On*
▶ Contactor K91a via auxiliary contact of contactor K91b	▶ *Check-back = Auxiliary contacts*
	▶ *DI2 Multi-function input = 001*
▶ Fault lamp at output DO2	▶ *Local operation via DIs = On, 002, 003* or *004*
▶ Check-back by aux.contacts on DI0	▶ *Set current 1* and *Set current 2*
▶ DI0, DI1, DI2 = Multi-function inputs e.g. Fault or stop inputs when parametrized	▶ Overload protection parameters
	▶ *Address* via Control Panel or Addressing Set
▶ Local operation via inputs DI4 and DI5	

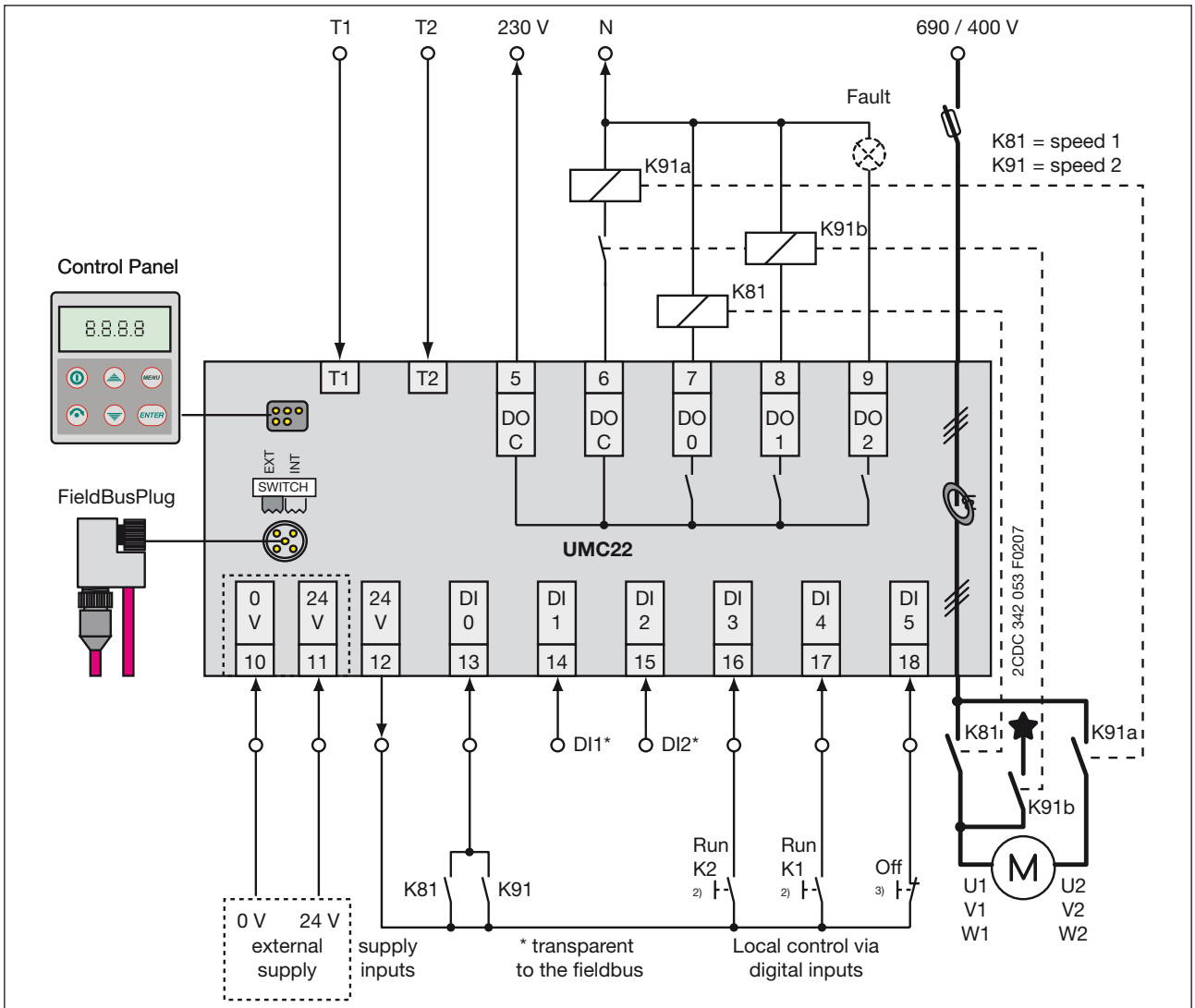

Remark: Output DO1 controls contactor K91b. Do not change!

1) Multi-function input as Fault input: 0 = fault (0 V signal)
2) Run A, Run B: Momentary-contact switch (On)
3) Off: 0 = dominating Off (closed-circuit signal)

Illustartion 8-23: UMC22-FBP: Control function = Pole-changing starter 1 - Dahlander-Motor (Extended circuit)

8.7.2 Description

With *Pole-changing starter 1* the outputs DO0 and DO1 are defined to drive the contactor coils as shown in the circuit diagrams.

The contactors are locked electronically to avoid short circuit due to not extinct spark. The minimal change-over time is fixed 50 ms.

To keep this lock-out function for Dahlander start also the contactors K81 and K91b must be controlled by the UMC22 outputs. Contactor K91a is controlled by an auxiliary contact of the contactor K91b.

8.7.2.1 Attached control functions (5.3.1)

The parameter set Attached control functions prepare the UMC22 to support different circuit arrangements including the use of inputs and outputs for particular use.

Examples:

Fault output (5.3.4)

Activate via Parameter *Fault output* = *On*:
If a fault appears
- the output contact DO2 closes and
- the internal fault signal is set.

Multi-function inputs DI0, DI1 and DI2 (5.3.4)

Depending of the parameterization of the parameters *DI0 Multi-function input*, *DI1 Multi-function input* and *DI2 Multi-function input* the following functions are possible:

- ▶ *Transparent* (default): status is monitored only to the fieldbus
- ▶ *Fault signal always / not delayed or delayed* with 1 to 255 s:
  The delay time starts whether the motor is running or not.
- ▶ *Fault signal dependent / delayed* with 1 to 255 s:
  The delay time starts only when the motor is running.
- ▶ *Motor off always / not delayed or delayed* with 1 to 255 s:
  The delay time starts whether the motor is running or not.
- ▶ *Motor off dependent / delayed* with 1 to 255 s:
  The delay time starts only when the motor is running.
- ▶ *Reset internal fault signal*
- ▶ *Test* → Start without motor (no current check-back when started)

Remark:

- ▶ DI0, DI1 and DI2 can be parametrized via fieldbus. Only DI2 can be parametrized via Control Panel.
- ▶ Setting *Check-back* = *Auxiliary contacts* and *DI0 Multi-function input* = *not 000* give the input DI0 two colliding tasks.
  As a result the internal fault signal is set and monitored via different ways, e.g. Parameter out of range / F004 (5.2.1). The motor cannot be started.
- ▶ DI0: can not be parameterized as Fault signal not delayed (reason: compatibility to older versions)

Local control via digital inputs (5.3.4)

Activate via parameter *Local operation via DIs* = *On*, *002*, *003* or *004*:
- DI3 and DI4 to start the motor, only via active signal possible
- DI5 to stop the motors, depending on the parameterization via closed circuit or active signal possible

Remark:
A simplified local control is possible via Control Panel (*Direct panel control*):
Start, stop and fault reset.

Further functions 5.3.1)

Other parameters define the protection behaviour and additional functions.7.7.2.2 Starting

8.7.2.2 Starting

Selection and activation of the control function

The control function can be set via LCD-panel or fieldbus and is taken over, if the motor is off.
If the configuration was changed in the control system, it must be downloaded to the UMC22 before it can be used.

.

Remark:
Most of the bus masters download / overwrite all parameters during power-up of the bus master or the UMC22. It may seem that the change of parameters via Control Panel is not effective.

Start of the motor

After activation of the selected control function the motor can be started with the bus command RUN FORWARD (speed 1, contactor K1) or RUN REVERSE (speed 2, contactors K2a and K2b) or via local control.

Change of the speed (A→B→A) is possible without restriction. Between the two speeds a minimal change-over time of about 50 ms is waited after current = 0 or auxiliary contact = off resp.

8.7.2.3 Check-back (5.3.4)

When the motor is started the check-back status is expected within 300 ms, otherwise a fault is detected. Selectable by parameter, current or auxiliary contact signal can serve as check-back status.

DI0 can not operate as Multi-function inputs when *Check-back* = *Auxiliary Contacts* is selected.

Remark:
Check-back = *Simulation* is recommended only to be set via Control Panel during commissioning. The control system must only set *Auxiliary contacts* or *Motor current* to guarantee that the check-back operates correctly after next power on.

8.7.2.4 Fault behaviour

All kinds of detected external and internal faults set the internal fault bit. In the following:

- ▶ contact DO0 (or DO1 resp.) for the contactor coil opens,
- ▶ the monitoring signal FAULT is sent to the fieldbus,
- ▶ the red LED lights on and
- ▶ the FAULT signal on the Control Panel display flashes.
- ▶ If parameterized the output DO2 switches on.

If a motor overload is the cause of the fault signal, the cooling time is started additionally . The cooling time is a parameter and can be adjusted. The running cooling time is shown on the Control Panel with "°C".

All faults (except communication fault) must be acknowledged via fieldbus (5.2.1), via Control Panel (9.1.3) or if parameterized via multi-function inputs (5.3.4) to allow to start the motor.
Additional the cooling time (5.3.4) must have elapsed to allow to restart the motor with a 0→1 transition of the RUN command (5.2.1).

More detailed information are monitored in the diagnosis telegram (5.2.1) and on the Control Panel 9.2.1).

8.7.2.5 Addressing (3.3.1)

The slave address of the UMC22-FieldBusPlug combination is not a parameter but can be set with Control Panel (9.2.2) or with separate Addressing Set.

Important!

The inputs and the internal electronic circuits are supplied normally by the FieldBusPlug "internally" (SWITCH to INT). Internal supply is also allowed for contacts next to the UMC22, when the 24 V wiring can be surveyed easily.

If distant contacts or sensors are connected, an external supply (SWITCH to EXT) must be used to avoid that an external short circuit paralyses the fieldbus (3.2.1).

8.7.3 Interface and data overview

Hardware Inputs / Outputs

Terminal	13	14	15	16	17	18
Device input (to bus)	DI0 [1] (aux. contact)	DI1	DI2 (ext. fault)	DI3 (local: K91a)	DI4 (local: K81)	DI5 (local: Off)
Terminal	7	8	9			
Device output (from bus)	DO0 (contactor K81)	DO1 (contactor K91b)	DO2 [1] (Fault output)			

Monitoring telegram, digital

Bit No.	7	6	5	4	3	2	1	0
Byte 0	WARNING	FAULT	LOCAL CONTROL	-	-	RUN FORWARD (contactor K81)	OFF	RUN REVERSE (contaktor K91a)
Byte 1	DI5 [1] (UMC input)	DI4 [1] (UMC input)	DI3 [1] (UMC input)	DI2 [1] (UMC input)	DI1 [1] (UMC input)	DI0 [1] (UMC input)	-	-

Monitoring telegram, analog

Byte 0 and Byte 1: Motorcurrent in % of set current

Command telegram, digital

Bit No.	7	6	5	4	3	2	1	0
Byte 0	-	FAULT RESET	AUTO MODE	-	SELF TEST	RUN FORWARD	OFF	RUN REVERSE
Byte 1	DO2 [1] (UMC output)	-	-	-		-	-	-

Diagnosis telegram

Bit No.	7	6	5	4	3	2	1	0
Fault Byte 0	-	Self test failed F010 [2]	Fault signal on DI0, DI1 or DI2 [1] F011 [2]	-	-	-	-	-
Fault Byte 1	Overload (trip) fault trip [2]	Motor blocked F002 [2]	Communi-cation fault F003 [2]	Parameter out of range F004 [2]	Current check-back fault [1] F005 [2]	-	-	Relay 0 check-back fault [1] F008 [2]
Warning Byte 2	Motor current high threshold [1]	Motor current low threshold [1]	-	Cooling time running °C [2]	-	Self test running buSy [2]	-	-
Warning Byte 3	If Parameter out of range: Pamameter number (leading two stages of the parameter, e.g. "02" Current factor) If Self test fauled: Self test error number (only for service) In all other cases:							
	-	Fault on DI2 F024 [2]	Faut on DI1 F023 [2]	Fault on DI0 F022 [2]	Earth fault F020 [2]	PTC short-circuit F019 [2]	PTC wire break F018 [2]	PTC temperature F017 [2]

[1] depending on parameterization [2] displayed on the Control Panel Busdata details see 5.2.2.

8.7.4 Timing diagrams

8.7.4.1 Change speed

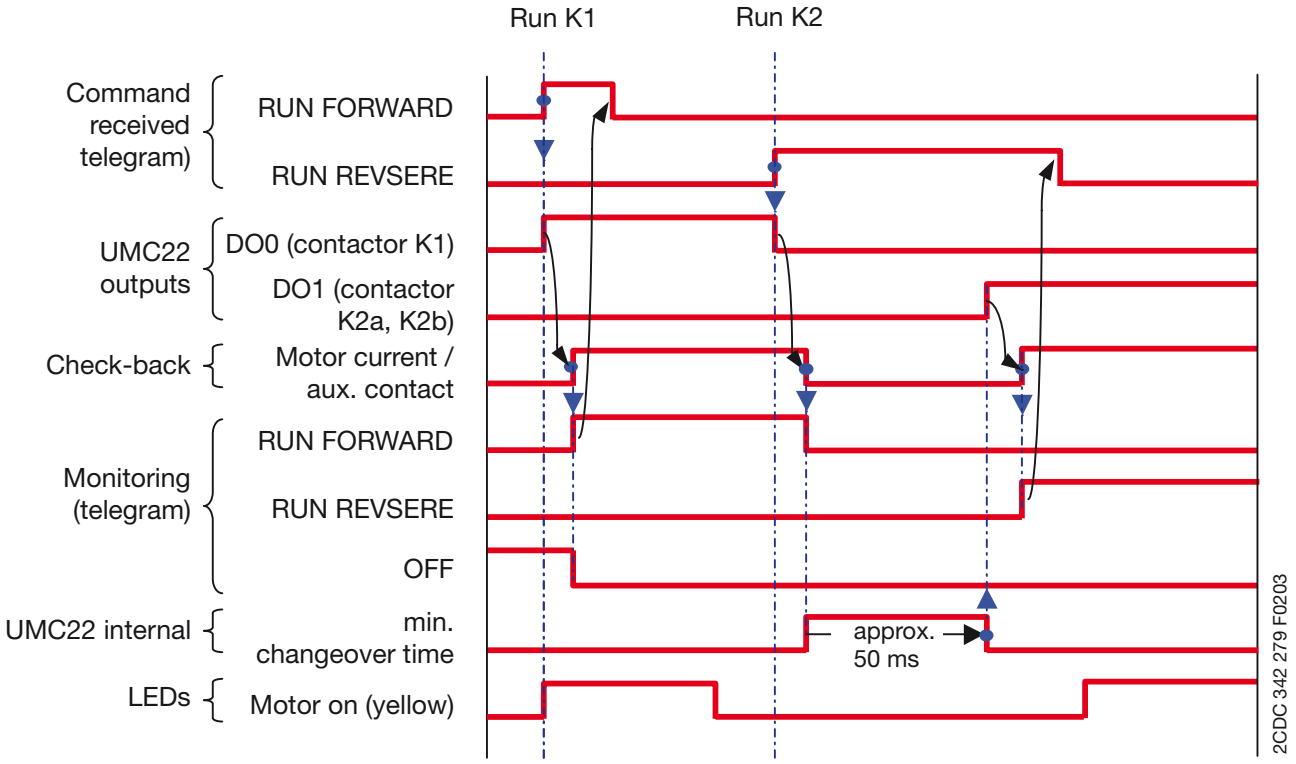

Illustration 8-24: UMC22-FBP: Control function = Pole-changing starter 1 - Timing diagram change speed

8.7.4.2 Overload

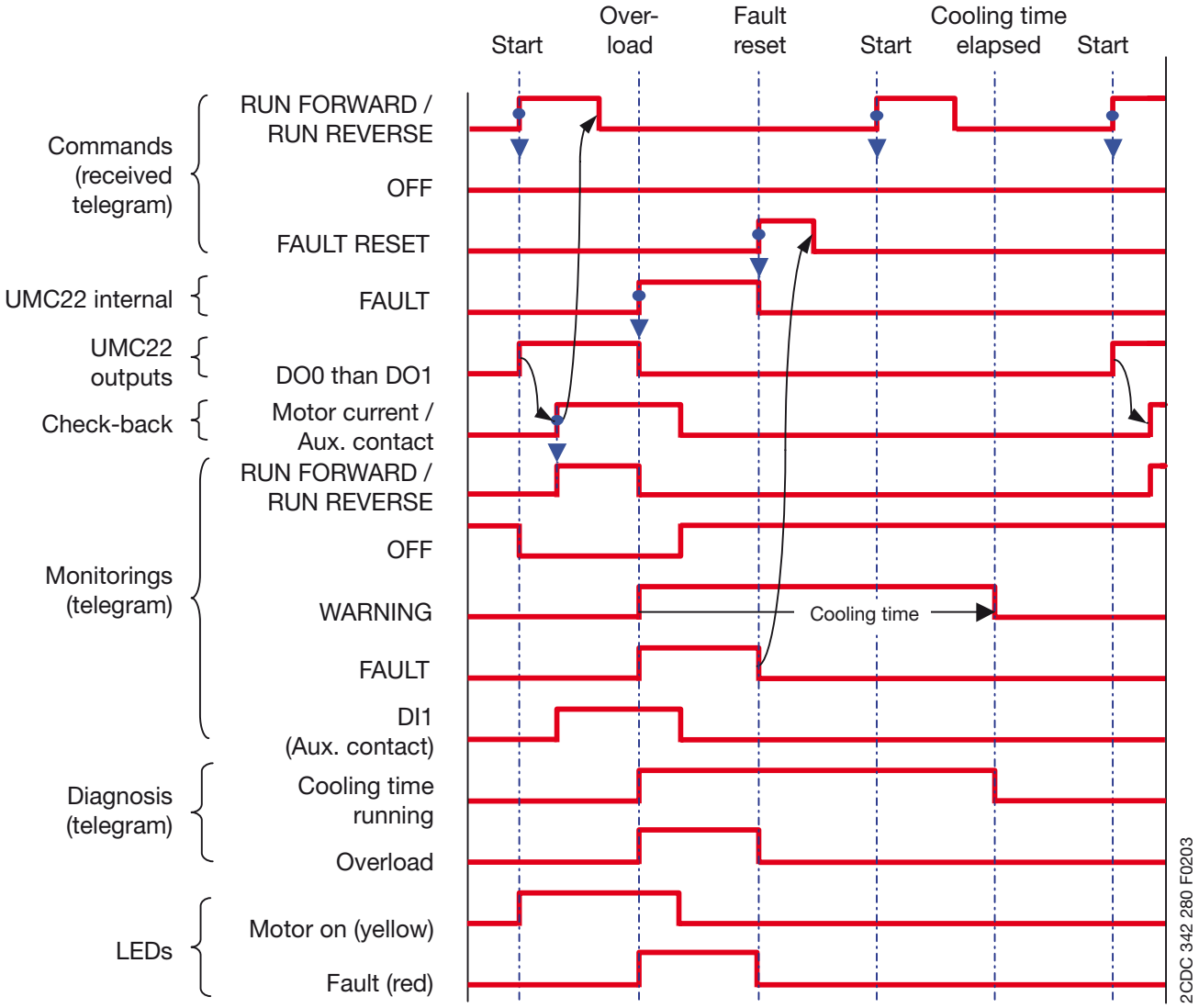

Illustration 8-25: UMC22-FBP: Control function = Pole-changing starter 1 - Timimg diagram overload

8.8 Actuator 1, 2, 3 and 4

The UMC22 parametrized with *Control function = Actuator 1, 2, 3 or 4* provides complete control as well as excellent protection of the Actuator motor.

Three inputs are prepared to monitor the status of the Actuator, depending on the selected Actuator version, the other three inputs can be parametrized as Fault input or as Local control signals resp.

The connection to a fieldbus is made via the appropriate type of the FieldBusPlug.

8.8.1 Circuit diagram

8.8.1.1 Basic circuit

Wiring	**Parameters to be changed** (5.3.4) **(based on default)**
▶ DO0 / DO1 for Open / Close contactor	▶ *Control function = Actuator 1, 2, 3* or *4*
▶ DI0 / DI1 for Open / Closed limit switches	▶ *Reverse lock-out time*
▶ DI3 for Torque switches (closed circuit)	▶ *DI2 Multi-function input = 001*
▶ DI2 = Multi-function input e.g. Fault input if parametrized	▶ *Run time limit = Star-delta starting time*
	▶ *Local operation via Dis = On, 002, 003* or *004*
▶ DI4, DI5 for Local Control if parametrized (motor runs as long as signal = 1)	▶ *Fault output = On*
	▶ *Set current 1* and *Set current 2*
	▶ Overload protection parameters
	▶ *Address* via Control Panel or Addressing Set

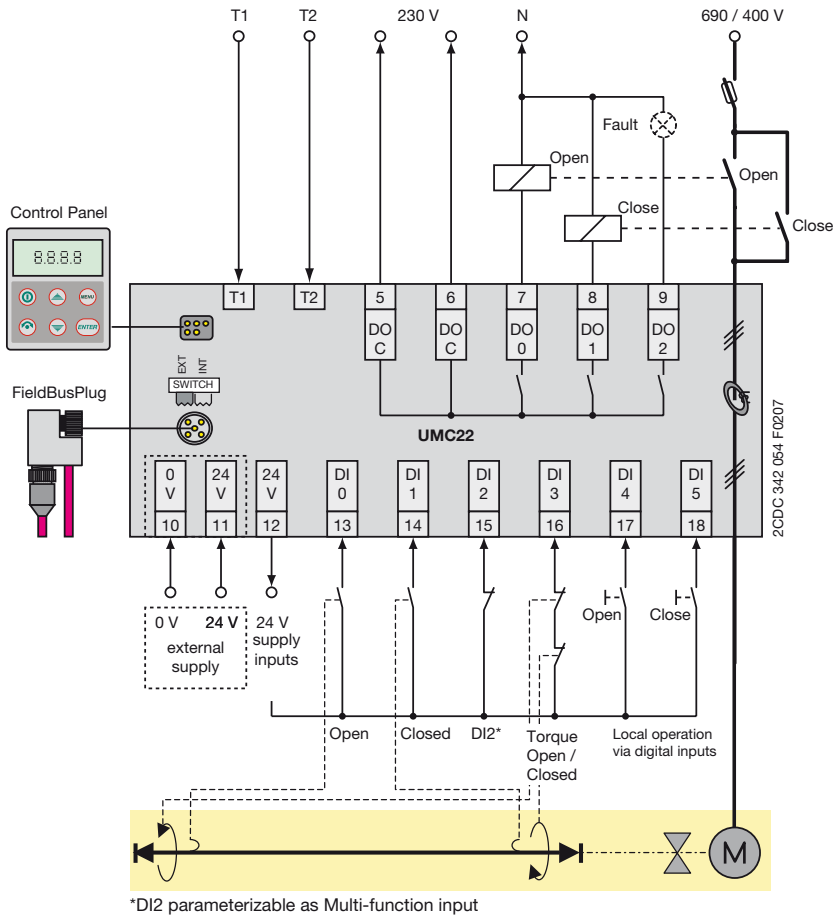

Illustration 8-26: UMC22-FBP: Control function = Actuator 2 (Basic circuit)

8.8.2 Description

The control functions Actuator 1, 2, 3 and 4 provide different use of and reaction on the limit switches Closed and Open and on the Torque switches (DI0, DI1 and DI3):

Overview:

Control function	Open ⟷ Closed			
	Torque open	Limit open	Limit closed	Torque closed
Actuator 1	-	Stop	Stop	-
Actuator 2	Stop	Prepare	Prepare	Stop
Actuator 3	-	Stop	Prepare	Stop
Actuator 4	Stop	Prepare	Stop	-

DI2, DI4 and DI5 and also DO2 can be parameterized for other functions, see below.

8.8.2.1 Actuator 1:
Open and Close position via limit switches

With torque switches

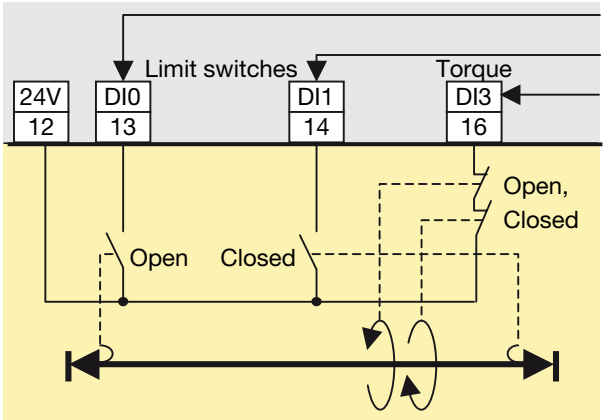

Illustration 8-27: UMC22-FBP: Control function = Actuator 1 (Basic circuit with torque switches)

DI0: Motor off, start only in Close direction

DI1: Motor off, start only in Open direction

DI3: Fault: motor stops

Remark:

- ▶ Torque signals are not necessary but can be used for surveillance.
- ▶ After switching off the motor continues to run for some milliseconds due to its rotating mass. Adjustment of the Closed and Open limit switches is necessary to get the correct end positions.

Without torque switches

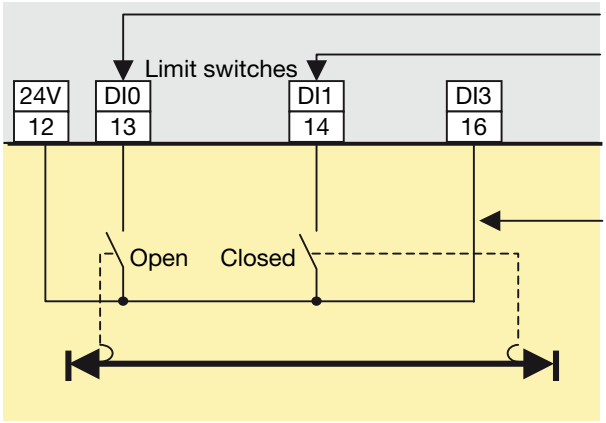

Illustration 8-28: UMC22-FBP: Control function = Actuator 1 (Basic circuit with torque switches)

DI0: Motor off, start only in Close direction

DI1: Motor off, start only in Open direction

Connection if torque contacts are not available

8.8.2.2 Actuator 2:
Open and Close position via torque and limit switches

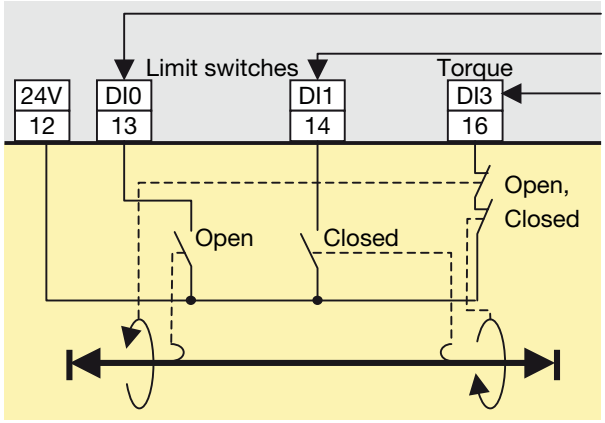

Illustration 8-29: UMC22-FBP: Control function = Actuator 2 (Basic circuit)

* Start is only possible in the opposite direction after resetting the fault. The torque signal has to disappear within 0.5 s otherwise a fault is generated again.

DI0: Preparation for Open limit motor off

DI1: Preparation for Closed limit motor off

DI3:
- Motor off, start only in opposite direction
- Fault if not prepared*

Remark:

- ▶ The limit switches Open or Closed prepare the stop. Torque Open or Close stop the motor. The start is only possible in the opposite direction.
- ▶ The single torque signals in the telegram - torque open or torque closed - are calculated based on the direction of movement before stop.
- ▶ If after power-up a torque signal is detected and neither an Open nor a Closed limit is present it will be supposed that the Torque happened during closing. The start is possible only after fault acknowledge and only in the opposite direction.

8.8.2.3 Actuator 3:
Open position via limit switch only, Closed position via torque and limit switches

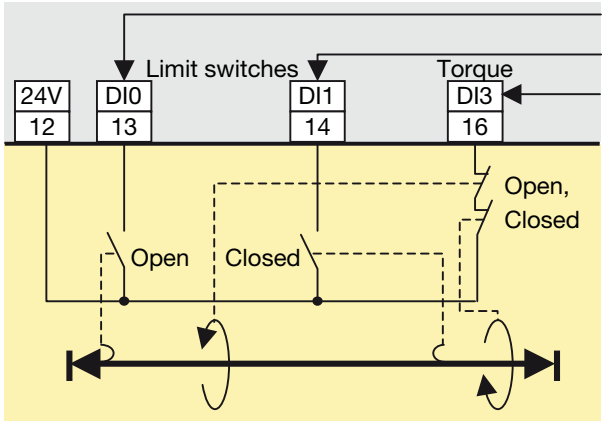

Illustration 8-30: UMC22-FBP: Control function = Actuator 3 (Basic circuit)

DI0: Motor off, start only in Close direction

DI1: Preparation for Close limit off

DI3:
- Motor off if prepared for Close off, start only in Open direction
- Fault if not prepared*

Remark:

- ▶ The limit switch Open prepares the stop.
  Torque Open stops the motor. The start is only possible in the opposite direction
- ▶ The single Torque signals in the telegram - Torque open or Torque closed - are calculated based on the direction of movement before stop.

8.8.2.4 Actuator 4:
Open position via torque and limit switches, Closed position via limit switch only

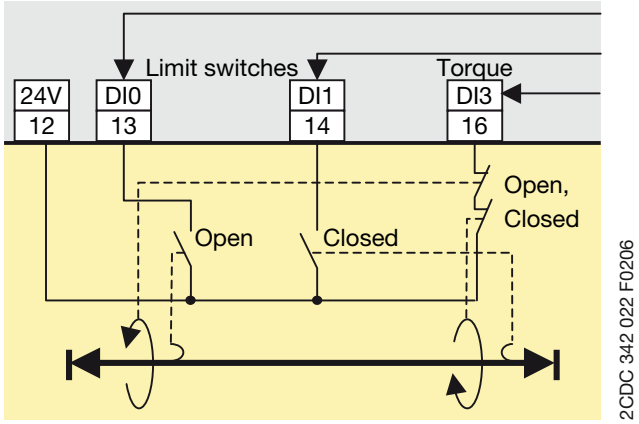

Illustration 8-31: UMC22-FBP: Control function = Actuator 4 (Basic circuit)

DI0: Preparation for Open limit off

DI1: Motor off, start only in Open direction

DI3:
- Motor off if prepared for Open off, start only in Close direction
- Fault if not prepared or if during closing

Remark:

▶ The limit switch Closed prepares the stop. Torque Closed stops the motor. The start is only possible in the opposite direction

▶ The single torque signals in the telegram - Torque open or Torque closed - are calculated based on the direction of movement before stop.

7.8.2.5 Definitions and Supervisions particular for the control functions Actuator 1,2,3 and 4

▶ Input signals: Open and Closed inputs are active signals, Torque input is a closed loop signal.

Attention!
In the application as actuator controller the inputs are connected to contacts outside of the cabinet. Therefore the UMC22 must be supplied locally via the terminals 10 and 11. The SWITCH must be set to EXT (3.2.1).

▶ The two Torque signals are connected in series. The discrete Torque signal is created based on the direction of movement before.

Remark:
If DI2 is not needed as Fault input it can be connected to the connection between the torque contacts to find out which torque signal is active.

▶ Run-time Open ⟷ Close: The *Run-time limit* (= *Star-delta starting time*) must be changed and should be set according to actuator datas. Setting the *Run-time limit = 1 s* disables the supervision.

▶ Starting from Open or Closed: The limit switch has to open within the start surveying time of 3 s. Exeeding the time results in the fault signal Open limit switch 1 → 0 not within 3 s after Close command. The *Start surveying time* can be enlongated (5.3.4).

▶ Faulty torque signal in intermediate position sets the internal fault signal
The motor is stopped an can be started again
- after fault reset via Fieldbus or other - AND -
- only in the opposite direction (direction before is blocked).

After start the torque signal must disappear within 0.5 s. Otherwise the internal fault signal is set again.

Fault reset and start in the opposite direction can be repeated as often as desired.

▶ If after power-up a Torque signal (0-signal) is present and neither an Open nor a Close signal is present it will be supposed that the Torque happened during closing. The motor can be started:
- after fault reset via Fieldbus or other - AND -
- only in the open direction

8.8.2.6 Attached control functions (453.1)

The parameter set Attached control functions prepare the UMC22 to support different circuit arrangements including the use of inputs and outputs for particular use.

Examples:

Fault output (5.3.4)

Activate via Parameter *Fault output* = *On*:
If a fault appears
- the output contact DO2 closes and
- the internal fault signal is set.

Multi-function inputs DI0, DI1 and DI2 (5.3.4)

Depending of the parameterization of the parameters *DI0 Multi-function input*, *DI1 Multi-function input* and *DI2 Multi-function input* the following functions are possible:

- ► *Transparent* (default): status is monitored only to the fieldbus
- ► *Fault signal always / not delayed or delayed* with 1 to 255 s:
  The delay time starts whether the motor is running or not.
- ► *Fault signal dependent / delayed* with 1 to 255 s:
  The delay time starts only when the motor is running.
- ► *Motor off always / not delayed or delayed* with 1 to 255 s:
  The delay time starts whether the motor is running or not.
- ► *Motor off dependent / delayed* with 1 to 255 s:
  The delay time starts only when the motor is running.
- ► *Reset internal fault signal*
- ► *Test* → Start without motor (no current check-back when started)

Remark:

- ► DI2 can be parametrized via fieldbus or via Control Panel.
- ► Setting the parameters *DI0* and *DI1 Multi-function input* = *not 000* gives the input DI0 and DI1 colliding tasks. As a result the internal fault signal is set and monitored via different ways, e.g. Parameter out of range / F004 (5.2.1). The motor can not be started.

Local control via digital inputs (5.3.4)

Activate via parameter *Local operation via DIs* = *On*, *002*, *003* or *004*:
- DI4 to start the motor, only via active signal possible
- DI5 to stop the motors, depending on the parameterization via closed circuit or active signal possible

Remark:
A simplified local control is possible via Control Panel (*Direct panel control*):
Start, stop and fault reset.

Further functions (5.3.1)

Other parameters define the protection behaviour and additional functions.

8.8.2.7 Starting

Selection and activation of the control function

The control function can be set via LCD-panel or fieldbus and is taken over, if the motor is off.
If the configuration was changed in the control system, it must be downloaded to the UMC22 before it can be used.

Remark:
Most of the bus masters download / overwrite all parameters during power-up of the bus master or the UMC22. It may seem that the change of parameters via Control Panel is not effective.

Start of the motor

After activation of the selected control function the motor can be started with the bus command RUN FORWARD (speed 1, contactor K1) or RUN REVERSE (speed 2, contactors K2a and K2b) or via local control.

Change direction

Change from one direction to the other requests:

- ► An OFF command is necessary before switching to the opposite direction.
- ► The OFF command starts the reverse lock-out time (parameterizable).
- ► The opposite RUN command - 0→1 transition - is accepted only when the reverse lock out time has elapsed.

8.8.2.8 Check-back (5.3.4)

When the motor is started the check-back status is expected within 300 ms, otherwise a fault is detected. Selectable by parameter, current or auxiliary contact signal can serve as check-back status.

DI0 can not operate as Multi-function inputs when *Check-back* = *Auxiliary Contacts* is selected.

Remark:
Check-back = *Simulation* is recommended only to be set via Control Panel during commissioning. The control system must only set *Auxiliary contacts* or *Motor current* to guarantee that the check-back operates correctly after next power on.

8.8.2.9 Fault behaviour

All kinds of detected external and internal faults set the internal fault bit. In the following:

- contact DO0 (or DO1 resp.) for the contactor coil opens,
- the monitoring signal FAULT is sent to the fieldbus,
- the red LED lights on and
- the FAULT signal on the Control Panel display flashes.
- If parameterized the output DO2 switches on.

If a motor overload is the cause of the fault signal, the cooling time is started additionally. The *Cooling time* is a parameter and can be adjusted. The running cooling time is shown on the Control Panel with "°C".

All faults (except communication fault) must be acknowledged via fieldbus (5.2.1), via Control Panel (9.1.3) or if parameterized via multi-function inputs (5.3.4) to allow to start the motor.
Additional the cooling time (5.3.4) must have elapsed to allow to restart the motor with a 0→1 transition of the RUN command (5.2.1).

More detailed information are monitored in the diagnosis telegram (5.2.1) and on the Control Panel (9.2.1).

Normally *Check-back* = *Current* (default) is active, it requests current >20 % of the set current 1 latest 300 ms after start, otherwise the internal fault signal is set. Setting *Check-back* = *auxiliary contacts* deactivates the surveyance.

8.8.2.10 Addressing (3.3.1)

The slave address of the UMC22-FieldBusPlug combination is not a parameter but can be set with Control Panel (9.2.2) or with separate Addressing Set.

8.8.3 Interface and data overview

Hardware Inputs / Outputs

Terminal	13	14	15	16	17	18
Device input (to bus)	DI0 (Check-back OLS)	DI1 (Check-back CLS)	DI2 [1] (Multifunction input)	DI3 (Check-back OTS / CTS)	DI4 [1] (local: open)	DI5 [1] (local: close)
Terminal	7	8	9			
Device output (from bus)	DO0 (contactor OPEN)	DO1 (contactor CLOSE)	DO2 [1] (Fault output)			

Monitoring telegram, digital

Bit No.	7	6	5	4	3	2	1	0
Byte 0	WARNING	FAULT	LOCAL CONTROL	-	REVERSE LOCK-OUT TIME	RUN FORWARD / Opening	OFF (aus)	RUN REVERSE/ Closing
Byte 1	DI5 [1] (UMC input)	DI4 [1] (UMC input)	DI3 (UMC input)	DI2 [1] (UMC input)	DI1 (UMC input)	DI0 (UMC input)	-	-

Monitoring telegram, analog

Byte 0 and Byte 1: Motorcurrent in % of set current

Command telegram, digital

Bit No.	7	6	5	4	3	2	1	0
Byte 0	-	FAULT RESET	AUTO MODE	-	SELF TEST	RUN FORWARD / Open	OFF	RUN REVERSE / Close
Byte 1	DO2 [1] (UMC output)	-	-	-		-	-	-

Diagnosis telegram

Bit No.	7	6	5	4	3	2	1	0
Fault Byte 0	Sametime OLS and CLS F009 [2]	Self test failed F010 [2]	Fault signal on DI0, DI1 or DI2 [1] F011 [2]	OLS 1 → 0 without close command F012 [2]	CLS 1 → 0 without open command F013 [2]	OLS 1 → 0 not within 3 s [3] after close command F014 [2]	CLS 1 → 0 not within 3 s [3] after open command F015 [2]	OTS 1 → 0 but not OLS (intermediate position) F016 [2]
Fault Byte 1	Overload (trip) fault trip [2]	Motor blocked F002 [2]	Communi-cation fault F003 [2]	Parameter out of range F004 [2]	Current check-back fault [1] F005 [2]	OLS 0 → 1 without open command F006 [2]	CLS 0 → 1 without close command F007 [2]	CTS 1 → 0 but not CLS (intermediate position) F008 [2]
Warning Byte 2	Motor current high threshold [1]	Motor current low threshold [1]	-	Cooling time running °C [2]	-	Self test running buSy [2]	-	Run-time exeeded [4]
Warning Byte 3	If Parameter out of range: Pamameter number (leading two stages of the parameter, e.g. "02" Current factor) If Self test fauled: Self test error number (only for service) In all other cases:							
	-	Fault on DI2 F024 [2]	Faut on DI1 F023 [2]	Fault on DI0 F022 [2]	Earth fault F020 [2]	PTC short-circuit F019 [2]	PTC wire break F018 [2]	PTC temperature F017 [2]

[1] depending on the parameterization [2] displayed on the Control Panel [3] Time can be elongated.
[4] Run-time: max. running time open ⟷ close. Use Parameter *Star-delta starting time*. Busdata details see 5.2.2.

9. Control Panel - Overview and menu

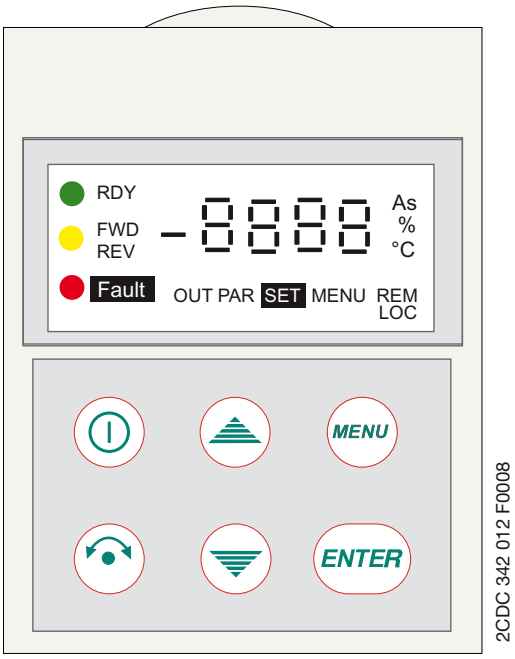

Fig. 9-1: UMC-PAN Control Panel for UMC22-FBP

Content

9. Control Panel - Overview and menu 135
9.1 Overview - Control Panel UMC-PAN 136
9.1.1 Menu levels 136
9.1.2 Buttons on the Control Panel 137
9.1.3 Direct panel control 138
9.1.3.1 Current indication in % or absolute 138
9.1.3.2 Menu levels for direct panel control 139
9.1.4 Comparison Password panel control and Direct panel control 140
9.2. Menu levels 141
9.2.1 Monitoring 141
9.2.2 Edit 1 147
9.2.3 Edit 2 151

9.1 Overview - Control Panel UMC-PAN

9.1.1 Menu levels

The Control Panel UMC-PAN offers the selection of a limited set of functions in 3 levels.

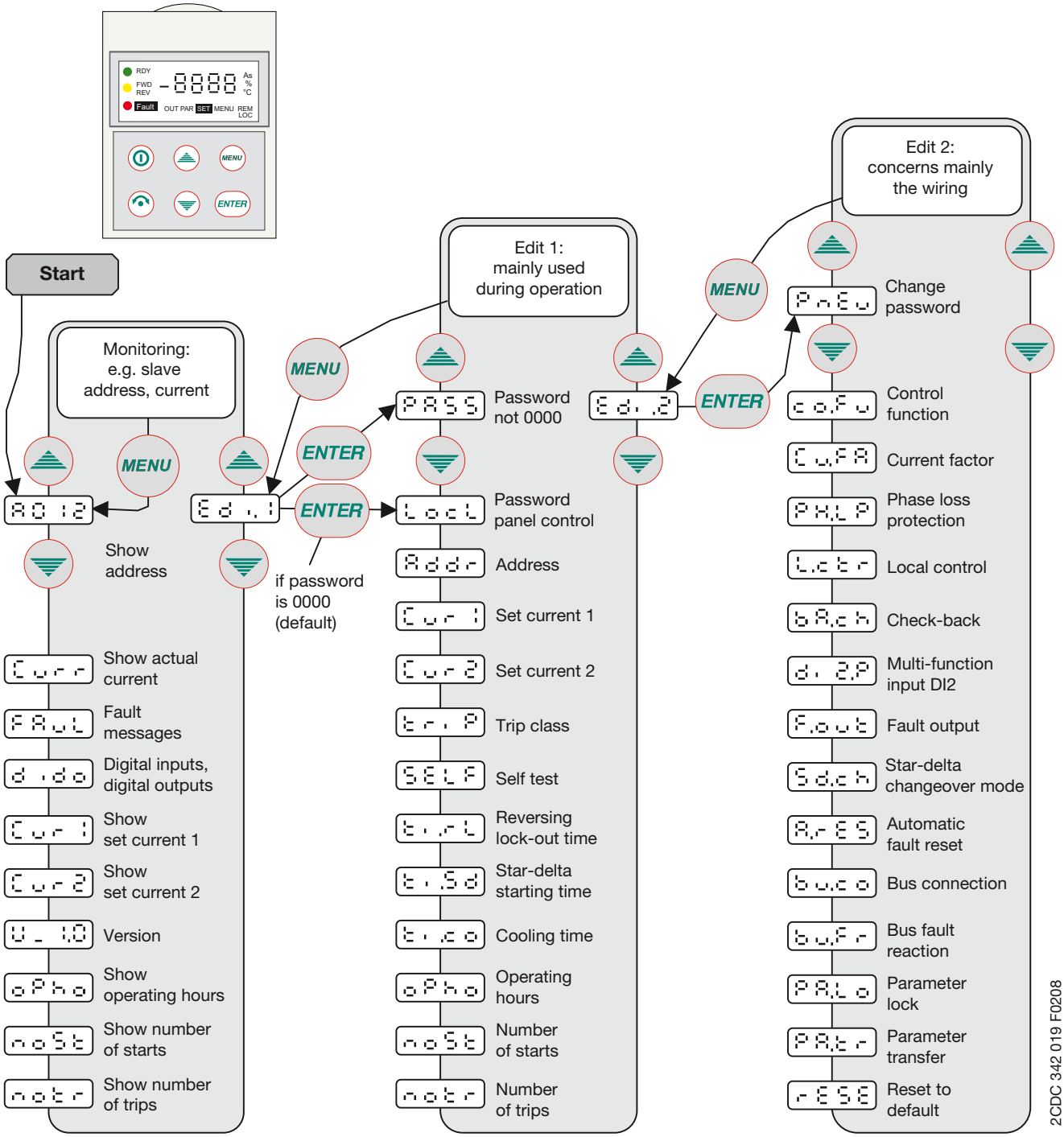

9.1.2 Buttons on the Control Panel

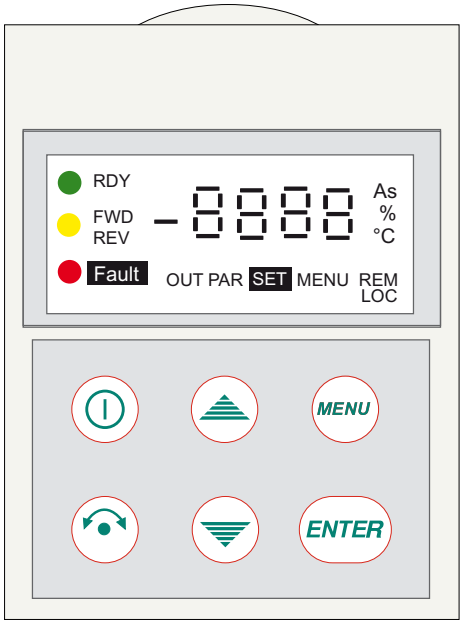

2CDC 342 012 F0008

Remark:
Changed parameters are displayed immediately but executed after power up of the UMC22 or motor off (3.5.2 und 5.3.4).

ENTER	Go to higher menu level or change/save value
PAR or LOC	Control Panel in menu level Edit 1 or Edit 2
SET	Edit 1 or Edit 2: ready to change the value
MENU	Go to lower menu level (unconditional / without saving value) Remark: Returns to menu point “Show address” after 5 min if no button is pressed. Exception: Display Curr
▲ ▼	Go to next or previous menu point, toggle round

2CDC 342 032 F0207

Procedure to adjust alphanumerical parameter values
(e.g. Parameter address, Password, ...)

- ▶ Select the parameter you want to adjusted or changed with [CURSOR].
- ▶ Confirm selection with [ENTER].
- ▶ The actual adjusted value is shown.
- ▶ The first position flashes. Change with [CURSOR] and confirm with [ENTER].
  - ▶ The next position flashes.
- ▶ The second position flashes. Change with [CURSOR] and confirm with [ENTER].
  - ▶ The next position flashes.
- ▶ The third position flashes. Change with [CURSOR] and confirm with [ENTER].
  - ▶ The next position flashes.
- ▶ The forth position flashes. Change with [CURSOR] and confirm with [ENTER] to safe the value.
- ▶ Go back with [MENU] at any time without saving.

9.1.3 Direct panel control

9.1.3.1 Current indication in % or absolute

Direct panel control via Control Panel UMC-PAN offers a significant simplified control of the motor during operation of an installation.

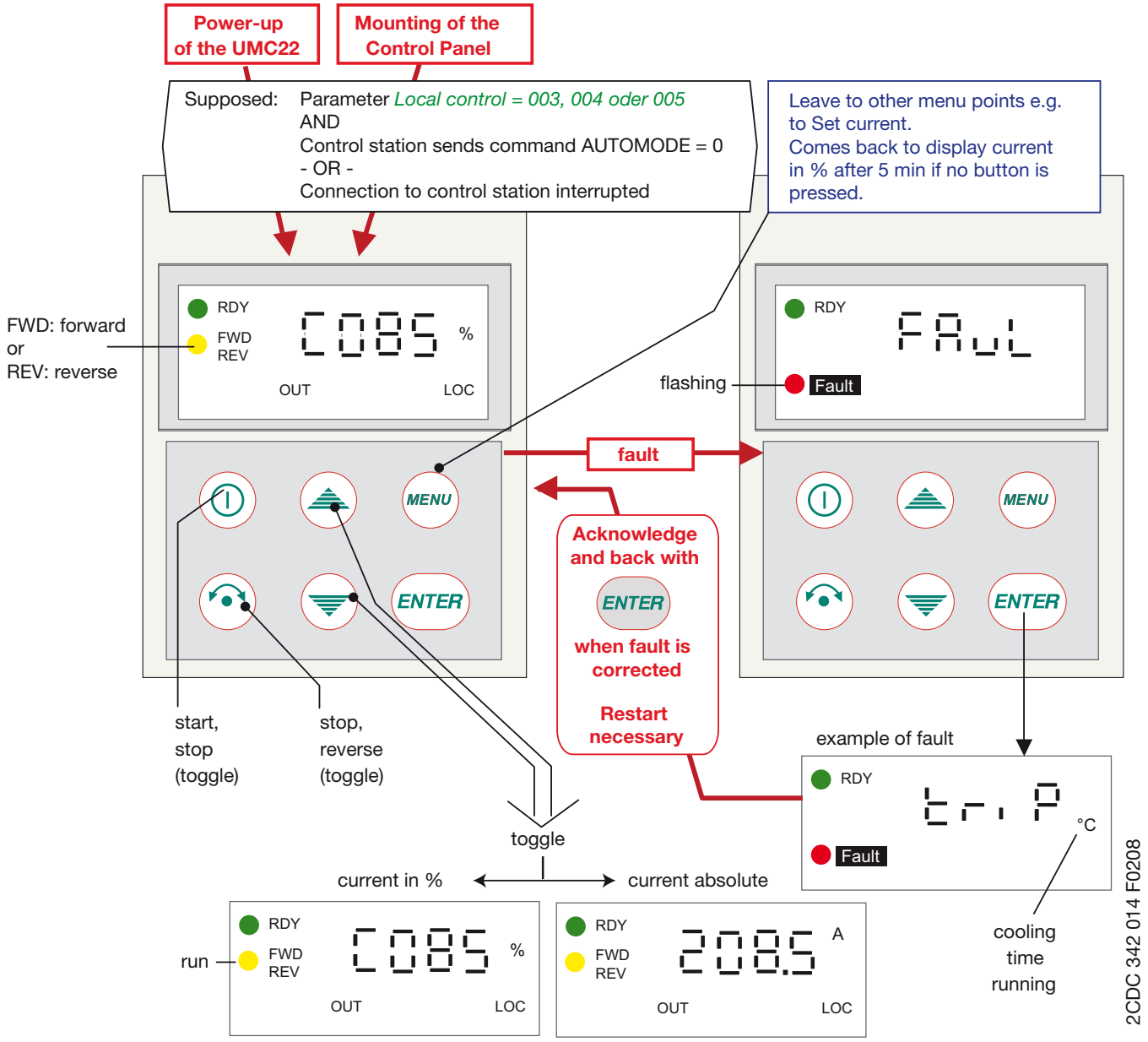

9.1.3.2 Menu levels for direct panel control

The Control Panel UMC-PAN offers the selection of a limited set of functions in 3 levels.

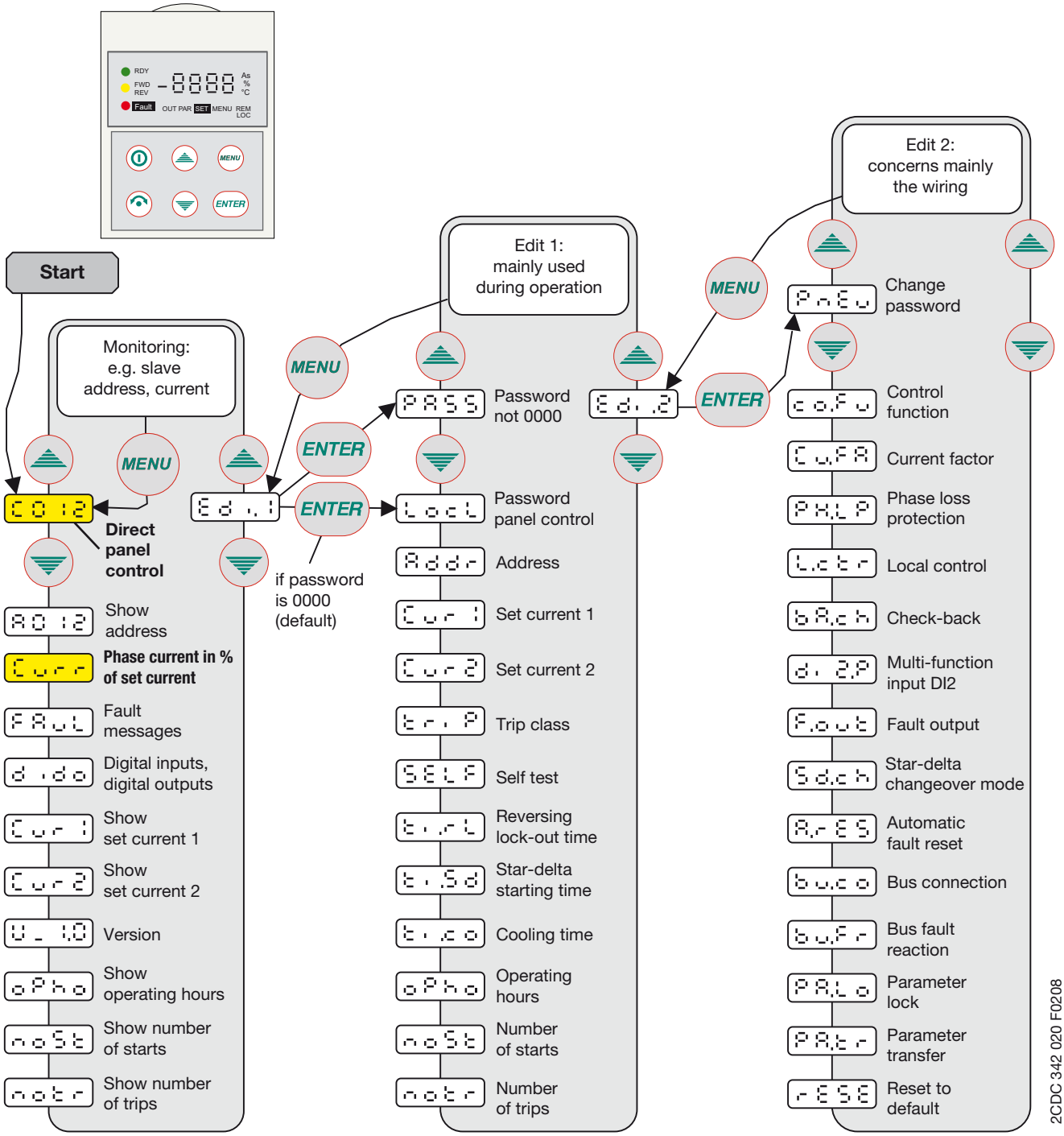

9.1.4 Comparison Password panel control and Direct panel control

Description:

The Control Panel on the UMC22 offers two different ways to switch off and on the motor.
The features and restrictions of both ways are based on safety / security requirements.
Definitions conc.:

► entering the menu point
► switching on and off the motor and
► access to other menu points etc.

Comparison:

	Password panel control	**Direct panel control**
Entering the menu	With power-up on the UMC22 or when mounting the Control Panel on the UMC22 the menu point Address (Axxx) appears. ► cursor up to "Edit1", [ENTER], ► enter Password if defined before, ► cursor down to "Local", [ENTER], ready to switch on and off motor with the two buttons on the left side	► set parameter *Local control = 003, 004 or 005* (4.3.4) or got to menu level Edit 2 (password protected) and set menu point Local control to L003, L004 or L005, (8.2.3) ► command AUTO MODE = 0 sent by the control system. The Control Panel immediately changes to Direct panel control. Similar when mounted or after power-up
Motor on	Switching on and off of the motor is always possible, under all circumstances, independent of any parameter adjustment and command in the master telegram.	Switching on motor only when control station allows. Switching off is always possible.
Safety / Security	Password must be defined and entered.	Only with command AUTO MODE = 0 from control station.
Leave from "Local…"	Before removing the Control Panel this menu must be left, otherwise the control system can not switch on the motor.	Contol Panel remains in this menu until AUTO MODE = 1 or when any fault appears.
Pass to Monitoring	Always possible	Always possible
Pass to Edit 1 / 2	Directly, but back to menu point address if no button is pressed for 5 min.	Only with password.
Mainly applied	During commissioning, for skilled people.	During normal operation where simplified control is desired.
Other info	Display of the current absolute or as percentage of the *Set current*, change with cursor up or down.	Display of the current absolute or as percentage of the *Set current*, change with cursor up or down.

9.2. Menu levels

9.2.1 Monitoring

Par. No.	Menu No.	Menu point name	Display: 7-segm.	Default	Range	Description / remark	take over
-	1.1	**Show address** (5.3.4)	A012	no	depending on bus typ	Actual slave address	-
			A---			Invalid / no address	
-	1.2	**Actual current**	Curr			Highest current of one of the 3 phases	-
	1.2.1	show	C113		0 - 800 % xx.xx A xxx.x A xxxx A	**Actual current in % of Set current** → % is displayed on the right side of the display, resolution on the bus 1/32 = 3.125 % With cursor it can be changed to (and back): **Actual current absolute** → A is displayed on the right side of the display, the position of the decimal point is set automatically	
-	1.3	**Fault messages** (5.3.4)	FAUL			FAULT on the left side of the display is flashing. → Fault existing! The menu goes directly to menu point Fault.	-
	1.3.x	first fault				The first of the existing faults is shown with [ENTER].	
	1.3.1.1	Acknowledge	Acno			Acnowledge of this fault with [ENTER].	
	1.3.y	next fault				The next existing fault is shown immediately.	
	1.3.1.1 ...	Acknowledge ...	Acno F---			Acknowledge this fault with [ENTER]. ... No Fault existing!	
	1.3.1	Overload fault	trip			Overload or phase loss has lead to trip. Cooling time has started. As long as the Cooling time is running the °C on the disply flashes. Acknowledge is possible when the Cooling time has elapsed. Restart of motor needs: - Acknowledge and - 0→1 transition of RUN FORWARD or RUN REVERSE command Remark: Blocking causes also Overload fault. In this case Cooling time is not started.	
	1.3.2	Motor blocked	F002			Motor current over blocking current threshold. Assumption: Parameter *Blocking current threshold* is activated.	

Par. No.	Menu No.	Menu point name	Display: 7-segm.	Default	Range	Description / remark	take over
-	1.3.3	Communication fault	F 0 0 3			UMC22 does not receive valid telegramms: control system, fieldbus or FieldBusPlug is out of order or interrupted or FieldBusPlug and UMC22 slave address are different. When the communication is correct again after fault the motor can be started immediately without fault acknowledge (3.3.1). Remark: Once the communication fault is acknowledged the menu goes back to "Show address" or to "Direct panel control" resp. even there is still a communication fault. Procedure: Fault [ENTER] F00x [ENTER] Acno [ENTER] F - - - [MENU] Fault [MENU]	-
	1.3.4	Parameter out of range	F 0 0 4			Received parameter exeeds high or low limit.	
	1.3.5	Current check-back fault	F 0 0 5			No motor current within 300 ms after switching on or motor current is still flowing 300 ms after switching off. Assumption: *Check-back = Motor current*	
	1.3.6	OLS 0→1 without close command (Actuator)	F 0 0 6			Actuator only! Open limit signal appears without open command	
	1.3.7	Relay 1 check-back fault	F 0 0 7			No 1-signal from auxiliary contact at input DI1 within 300 ms after switching on the contactor or 1-signal at input DI1 even if contactor is not switched on. Assumption: *Check-back = Auxiliary contacts*	
		CLS 0→1 without close open (Actuator)				Actuator only! Closed limit signal appears without close command	

Par. No.	Menu No.	Menu point name	Display: 7-segm.	Default	Range	Description / remark	take over
-	1.3.8	Relay 0 check-back fault	F 0 0 8			No 1-signal from auxiliary contact at input DI0 within 300 ms after switching on the contactor or 1-signal at input DI0 even if contactor is not switched on. Assumption: *Check-back = Auxiliary contacts*	-
		CTS 1→0 but not CLS (Intermediate position) (Actuator)				Actuator only! Closed torque signal appears (without closed limit signal) in intermediate position	
	1.3.9	Sametime OLS and CLS (Actuator)	F 0 0 9			Actuator only! Closed limit signal and Open limit signal are present at the same time	
	1.3.10	Self test failed	F 0 1 0			Self test failed, e.g. CRC check not ok, or was started during motor running. **Remark:** This fault can not be achnowledged.	
	1.3.11	Fault signal on DI0, DI1 or DI2	F 0 1 1			At least one Multi-function input has a fault signal (0-signal) e.g. from a thermistor module. Assumption: At least one multi-function input is parametrized as *Multi-function input = P.001* (Fault signal always / not delayed) (closed-circuit principle).	
	1.3.12	OLS 1→0 without close command (Actuator)	F 0 1 2			Actuator only! Open limit signal disappears without close command.	
	1.3.13	CLS 1→0 without open command (Actuator)	F 0 1 3			Actuator only! Closed limit signal disappears without open command.	
	1.3.14	OLS 1→0 not within 3 s after close command (Actuator)	F 0 1 4			Actuator only! Open limit signal does not disappear within 3 s after close command (8.8).	
	1.3.15	CLS 1→0 not within 3 s after open command (Actuator)	F 0 1 5			Actuator only! Closed limit signal does not isappear within 3 s after open command (8.8).	
	1.3.16	OTS 1→0 but not OLS (Intermediate position) (Actuator)	F 0 1 6			Actuator only! Open torque signal appears in intermediate position (without Open limit signal).	

Par. No.	Menu No.	Menu point name	Display: 7-segm.	Default	Range	Description / remark	take over
-	1.3.17	**PTC temperature**	F017			Motor temperature to high	-
	1.3.18	**PTC wire break**	F018			One of the PTC feed lines is broken	
	1.3.19	**PTC short-circuit**	F019				
	1.3.20	**Earth fault**	F020				
	1.3.21	**Address fault**	F021			Address check monitors: addresses of FieldBusPlug and UMC22 are different	
	1.3.22	**Fault on DI0**	F022			External fault signaled via DI0	
	1.3.23	**Fault on DI1**	F023			External fault signaled via DI1	
	1.3.24	**Fault on DI2**	F024			External fault signaled via DI2	

-	1.4	**Digital input, digital output**	d.do				-
	1.4.0	DI0	d.0.0			Example: 0 signal at digital input 0	
	:	DI1...DI5...DO0.. DO1	:			:	
	1.4.8	DO 2	do2.1			Example: 1 signal at digital output 2	
	1.4.9	Status DI, DO	dnrr			Left place of the display: "d" for digital I/O Upper vertical lines of the 2 right places: Signal status of the 3 digital outputs, from DO0 (right) to DO2 (left). Line visible = 1. Lower vertical lines of the 3 right places: Signal status of the 6 digital inputs, from DI0 (right) to DI5 (left). Line visible = 1. Horizontal lines: Shall help to find I/O number. Example shown left: DO-Nr. : 0,1,2 DO-Status: 1 0 1 DI-Status: 1 1 1 0 1 0 DI-Nr. : 0,1,2,3,4,5	

Par. No.	Menu No.	Menu point name	Display: 7-segm.	Default	Range	Description / remark	take over
01	1.5	**Show set current 1** (5.3.4)	Cur 1		0.24-3200 A	The UMC22 measures the currents of the lines in the bushing holes. √3 wiring and/or the use of an external current transformer result in a higher power line current. To show e.g. the real rated motor current the Current factor can be changed, see menu point Current factor in level Edit 2. Depending on the Current factor the number of stages before the decimal point fits to the desired range.	-
	1.5.1	show	10,00 100,0 1000		0.24-63.00 A 0.42-109.0 A 50- 3200 A	- Displayed range at Current factor = 1.0 (default) - Displayed range at Current factor = 1.7 (for √3 circuitry) - Displayed range at Current factor > 10 (for external current transformer, secondary current 5 A)	
03	1.6	**Show set current 2** (5.3.4)	Cur 2			Set current of winding 2 of 2-speed-motors.	-
	1.6.1	show	01,00			see show Set current 1	
-	1.7	**Version**	U_3.3			Firmware-version of UMC22	-
18	1.8	**Operating hours** (5.3.4)	oPho			All hours are counted but the unit place is not displayed in the Control Panel (10 hour steps). Displayed figures 00.00-65.53 correspond with real 00'000-65'530.	-
	1.8.1	show	00,00	0	0-65'535		
19	1.9	**Number of starts** (5.3.4)	noSt			All starts are counted but the three lower places are not displayed on the Control Panel. The displayed range 0000-1000 corresponds with real 0-1'000'000.	-
	1.9.1	show	0000	0	0-1'000'000		

Par. No.	Menu No.	Menu point name	Display: 7-segm.	Default	Range	Description / remark	take over
25	1.10	**Number of trips** (5.3.4)	nbtr			All trips are counted and displayed as 0000-0255 (E: 0xxx→ xxx).	-
	1.10.1	show	0000	0	0-255		
-	1.11 to 2.1	**Edit 1**	Ed.1			Go to Local control, to parameters for motor protection and times with [ENTER].	-

9.2.2 Edit 1

Par. No.	Menu No.	Menu point name	Display: 7-segm.	Default	Range	Description / remark	take over
-	2.1	**Password**	PASS			Skipped to menu point Password panel control if the password (default 0000) has not been changed. Else enter password	immedia-tely
	2.1.1	enter password * * * *	0000	0	0001-9999	- At any time back with [MENU] without saving. - First position flashes, change with [Cursor], press [ENTER], ..., 4th number flashes, change with [CURSOR], after position 4 (4!) save with [ENTER].	
-	2.2	**Passoword panel control**	LocL			Local control is always possible, independent of the status of the command AUTO MODE. If local control is activated, RUN commands from the control system are ignored. Entering and leaving local control does not influence the actual status of the outputs of the UMC22 Before removing the Control Panel this menu must be left, otherwise the control system can not switch on the motor.	-
	2.2.1	switch motor on and off change direction				Off is always possible and dominating via control system, Control Panel and, if parametrized, via digital input DI0. Toggle on/off of the relay outputs, on incl. start procedure and check-back. **Remark:** Reversing starter: Selection of the other direction is possible if - motor is stopped AND - Reversing lock-out time has elapsed. Pole-changing starter: Switch over to the other speed is executed immediately (changeover time min. 50 ms). Display: Speed 1=FWD Speed 2=REV.	

Par. No.	Menu No.	Menu point name	Display: 7-segm.	Default	Range	Description / remark	take over
-	2.3	**Address**	Addr				-
	2.3.1	show / change	A023 A---	A000	depending on bus type	- entered address: here 23. - no address (Entering 999 results in "no address")	
01	2.4	**Set current 1** (5.3.4)	Cur 1			The UMC22 measures the currents of the lines in the bushing holes. √3 wiring and/or the use of an external current transformer result in a higher power line current. To show e.g. the real rated motor current the Current factor can be changed, see menu point Current factor in level Edit 2. Depending on the Current factor the number of stages before the decimal point fits to the desired range (More details see menu point Current factor and chapter 3.2.3 and 3.2.4). With [Enter]:	during motor off
	2.4.1	show / change	10,00 100,0 1000	0.5 A	0.24-63.00 A 0.42-109.0 A 1- 3200 A	- Displayed range at Current factor = 1.00 (default) 2 stages before decimal point - Displayed range at Current factor = 1.7 (internally corrected into 1.73, used for √3 circuitry, up to 109.0 A without external current transformer) 3 stages before decimal point - Displayed range at Current factor 10-640 (used for external current transformers, with secondary current = 5 A) 4 stages before decimal point	
03	2.5	**Set current 2** (5.3.4)	Cur 2			Only for pole-changing and dahlander starter! Set current of winding 2 of 2-speed-motors.	during motor off
	2.5.1	show / change	01,00	0.5 A	0.24 - 63 A or more	see Set current 1	
04	2.6	**Trip class** (453.4)	tr.P			overload calculation (thermal memory)	during motor off
	2.6.1	Class 5	tr 5				
	2.6.2	Class 10	tr 10	10			
	2.6.3	Class 20	tr 20				
	2.6.4	Class 30	tr 30				

Par. No.	Menu No.	Menu point name	Display: 7-segm.	Default	Range	Description / remark	take over
-	2.7	**Self Test (Overload)** (5.3.4)	SELF			Tests different functions, creates an overload and checks the correct trip time. **Remark:** Starting the Self Test (Overload) sets the thermal memory to zero. This means a warmed up motor is not protected correctly if started immediately after the Self Test. With [ENTER] to:	-
	2.7.1		Acno			Start with [ENTER]	
	2.7.2		buSY			Shows the correct test run. Test is ok if no fault signal is set after the test.	
17	2.8	**Reverse lock-out time** (5.3.4)	t.rL			Only for bidirectional starter! Time starts running with the OFF command. An Off command is nessesary between run forward and reverse, that means between RUN FORWARD and RUN REVERSE command. A RUN command into the other direction will be only acepted when the Reverse lock-out time has elapsed. (adjusting 0 results in 0.2)	during motor off
	2.8.1	show / change	0002	2 s	0.2-3600 s	Show and change Reverse lock-out time in steps of 1 s	
16	2.9	**Star-delta starting time**	t.Sd			**Only for Star-delta starter!** Starts with the RUN command.	during motor off
		Run-time limit (5.3.4)				**Only for Actuator 1-4!** This time is used to survey the running time from Closed to Open position and vice versa (see parameter *Start surveying time / Star-delta changeover mode*).	
	2.9.1	show / change	0060	60 s	0-3600 s	Show and change time in steps of 1s	
10	2.10	**Cooling time** (5.3.4)	t.co			Cooling time simulates the cooling behaviour of the inoperating motor after tripping. **Remark:** During Cooling time is running, RUN commands are not accepted. WARNING is monitored.	during motor off
	2.10.1	show / change	0120	120s	30 - 3600s	Show and change Cooling time in steps of 1s	

Par. No.	Menu No.	Menu point name	Display: 7-segm.	Default	Range	Description / remark	take over
18	2.11	**Operating hours** (5.3.4)	oPho			All hours are counted but the unit place is not displayed in the Control Panel (10 hour steps). Displayed figures 00.00 - 65.53 correspond with real 00‘000 to 65‘530	during motor off
	2.11.1	show / change	0000	0	0 - 65‘535		
19	2.12	**Number of starts** (5.3.4)	noSt			All starts are counted but the three lower places are not displayed on the Control Panel. The displayed range 0000-1000 corresponds with real 0 to 1‘000‘000.	during motor off
	2.12.1	show / change	0000	0	0-1'000‘000		
25	2.13	**Number of trips** (5.3.4)	notr			All trips are counted and displayed as 0000-0255.	during motor off
	2.13.1	show / change	0000	0	0 - 255		
-	2.14 to 3.1	**Edit 2**	Edi.2			Go to operation level Edit 2.	-

9.2.3 Edit 2

Par. No.	Menu No.	Menu point name	Display: 7-segm.	Default	Range	Description / remark	take over
-	3.1	**Change password** (5.3.4)	PnEu				-
	3.1.1	show / change	1234	0000	0001-9999	Show and change password. Entering 0000 resets the password to none.	
12	3.2	**Control function** (5.3.4)	coFu				Power up transition
	3.2.1	Transparent	c.trA	Trans.		Direct access to DIs/DOs via fieldbus	
	3.2.2	Overload relay	c.oUL			Similar to overload relay	
	3.2.3	Direct starter	c.d ir			Direct start with check-back	
	3.2.4	Reversing starter	c.rEU			Reversing start with check-back	
	3.2.5	Star-delta starter 1	c.Sd1			Star-delta start via 2 DOs, with check-back	
	3.2.6	Pole-changing starter 1	c.Pch			Pole-changing start witch check-back	
	3.2.7	Actuator 1	c.Ac1			Actuator start type 1 witch check-back	
	3.2.8	Actuator 2	c.Ac2			Actuator start type 2 witch check-back	
	3.2.9	Actuator 3	c.Ac3			Actuator start type 3 witch check-back	
	3.2.10	Actuator 4	c.Ac4			Actuator start type 4 witch check-back	
	3.2.11	Star-delta starter 2	c.Sd2			Star-delta start via 3 DOs, with check-back	

Par. No.	Menu No.	Menu point name	Display: 7-segm.	Default	Range	Description / remark	take over
02	3.3	**Current factor** (5.3.4)	CurFA			The UMC22-FBP measures the currents of the lines in the bushing holes. √3 wiring and/or the use of an external current transformer result in a higher power line current. To show e.g. the real rated motor current the Current factor has to be changed before or together with the Set current. Depending on the Current factor the number of stages before the decimal point fits to the desired range (More details see menu point Current factor and chapter 3.2.3 and 3.2.4). With [Enter]:	during motor off
	3.3.1	show / change	00 1.0 00 1.7 640.0	1.0	1.0 1.7 10-640	- Current range: 0.24-63.00 A (default) 2 stages before decimal point - Current range: 0.42-109.0 A (1.7 is internally corrected into 1.73, used for √3 circuitry, up to 109.0 A without external transformer) 3 stages before decimal point - Current range: 10-3200 A (supposed an external current transformers with a secondary current of 5 A). 3 stages before decimal point.	

06	3.4	**Phase loss protection** (5.3.4)	PHLP			**Please read the safety remark in subsection 5.3.4!** Assumption: The motor current has to be minimum 70 % of the rated current in fault free status. In case of phase unbalance or phase loss, the difference between the highest and the lowest phase current must be ≥ 50 % to trip.	during motor off
	3.4.1	Off	PHoF			Phase loss protection active [1]/ PTC protection not active	
	3.4.2	On	PHon	On		Phase loss protection active / PTC protection not active (=default)	
	3.4.3	Off + PTC Warn	PH02			Phase loss protection active [1]/ PTC protection active with PTC warning	
	3.4.4	On + PTC Warn	PH03			Phase loss protection active / PTC protection active with PTC warning	
	3.4.5	004	PH04			Phase loss protection active [1]/ PTC protection not active	
	3.4.6	005	PH05			Phase loss protection active / PTC protection not active	
	3.4.7	Off + PTC Trip	PH06			Phase loss protection active [1]/ PTC protection active with PTC trip	
	3.4.8	On + PTC Trip	PH07			Phase loss protection active / PTC protection active with PTC trip	

[1] with software version 3.5 always activated (see chapter 4.3.7)

Par. No.	Menu No.	Menu point name	Display: 7-segm.	Default	Range	Description / remark	take over
22	3.5	**Local control** (5.3.4)	L.ctr			This parameter prepares for: - Local operation via digital inputs AND/OR - Direct panel control via Control Panel (9.1.2). **Remarks:** - Off Input DI5 can be prepared as closed-circuit signal or as true signal. - Local control (direct panel control and/or local operation via DIs) is activated if ~ command AUTO MODE = 0 is send by the control system -OR- ~ communication to the control system is interrupted.	during motor off
	3.5.1	No local control	L.c.oF	No loc. control		No local control of any kind	
	3.5.2	Local operation only via DI3, DI4, DI5 (1)	L.c.on			DI3: Reverse (true, pulse) DI4: Forward (true, pulse) DI5: Off (closed circuit, pulse) No Direct panel control via Control Panel	
	3.5.3	Local operation only via DI3, DI4, DI5 (2)	L.002			DI3: Reverse (true, pulse) DI4: Forward (true, pulse) DI5: Off (true, pulse) No Direct panel control via Control Panel	
	3.5.4	Local operation via DI3, DI4, DI5 (1) Direct panel control via Control Panel	L.003			DI3: Reverse (true, pulse) DI4: Forward (true, pulse) DI5: Off (closed circuit, pulse) Direct panel control via Control Panel	
	3.5.5	Local operation via DI3, DI4, DI5 (2) Direct panel control via Control Panel	L.004			DI3: Reverse (true, pulse) DI4: Forward (true, pulse) DI5: Off (true, pulse) Direct local control via Control Panel	
	3.5.6	Direct panel control only	L.005			Only Direct panel control via Control Panel	

Par. No.	Menu No.	Menu point name	Display: 7-segm.	Default	Range	Description / remark	take over
13	3.6.	**Check-back** (5.3.4)	bA,ch				during motor off
	3.6.0	Auxiliary contacts	bA,Au			Check-back OK, when auxiliary contacts are closed 300 ms after start.	
	3.6.1	Motor current	bA,Cu	current		Check-back OK, when current is > 40 % of the set current is present 300 ms sfter start.	
	3.6.2	Simulation	bA,Si			Simulated check-back (e.g. to be set to operation without motor). **Remark:** Normally overwritten by the control system during power on (4.3).	
21	3.7	**DI2 Multi-function input** (5.3.4)	di 2,P		01...49	Multi-function input DI2 offers additional possibilities to survey the motor and the production process it is used for. **Remarks:** Multi-function input DI2 replaces - keeping the compatibility - the former parameter Fault input (DI2). The same functions are available for DI0 and DI1 but can be parameterized only via bus master / fieldbus.	during motor off
	3.7.00	Transparent	P,000	P.000		Input status is monitored only to the fieldbus. (correspondes to former parameter Fault input DI2 = Off)	
	3.7.01	Fault signal always / undelayed	P,001			If the input DI2 = 0 the internal fault signal is set immmediately. In the following: ► Relays outputs open, motor is stopped ► fault is monitored to the fieldbus ► If parameter *Fault output* = *On* output DO2 is set to 1. The fault can be only acknowledged when the input gets high signal. After successful acknowledge the motor can be restarted. (correspondes to former paremeter Fault input DI2 = On)	
	3.7.02	Motor off always / undelayed	P,002			If one of the inputs DI0, DI1 or DI2 = 0 the motor is stoped immediately. The internal fault signal ist not (!) set.	

Par. No.	Menu No.	Menu point name	Display: 7-segm.	Default	Range	Description / remark	take over
21 (cont.)	3.7.03 ... 3.7.06	reserved	P.003 - P.006			reserved	during motor off
	3.7.07	Fault reset	P.007			1 signal at input DI2 resets the internal fault signal, provided that the cause of fault is repaired and the fault reason is not longer present.	
	3.7.08	Test	P.008			1 signal at inputDI2 simulates check-back "everything's OK". The motor can be controlled independend of any check-back (sometimes called Test input particularely for drawer systems). This setting corresponds to parameter *Check-back* = *Simulation*. For safety reasons it should be set via Control Panel only.	
	3.7.09	reserved	P.009			-	

Par. No.	Menu No.	Menu point name	Display: 7-segm.	Default	Range	Description / remark	take over
21 (cont.)	3.7.19 - 3.7.18	Fault signal always / delayed				DI2 = 1: faultless status ("released") DI2 = 0: internal fault signal is set after delay time independend of the motor run/off status. After delay time internal fault signal is set → motor stops. Restart is possible only after fault acknowledge **Remark:** The signals are monitored to the fieldbus without delay.	during motor off

Menü No.	Display	Delay time	Menü No.	Display	Delay time
3.7.10	P.010	1 s	3.7.15	P.015	32 s
3.7.11	P.011	2 s	3.7.16	P.016	64 s
3.7.12	P.012	4 s	3.7.17	P.017	128 s
3.7.13	P.013	8 s	3.7.18	P.018	255 s
3.7.14	P.014	16 s			

	3.7.19	reserved	P.019			reserved
	3.7.20 - 3.7.28	Motor off always / delayed				DI2 = 1: motor: start is released, is not stopped DI2 = 0: time starts independend of motor run/off status. After time delay motor is not longer released or is stopped resp.“

Menü No.	Display	Delay time	Menü No.	Display	Delay time
3.7.20	P.020	1 s	3.7.25		32 s
3.7.21	...	2 s	3.7.26		64 s
3.7.22		4 s	3.7.27		128 s
3.7.23		8 s	3.7.28		255 s
3.7.24		16 s			

	3.7.29	reserved	P.029			reserved

Par. No.	Menu No.	Menu point name	Display: 7-segm.	Default	Range	Description / remark	take over
21 (cont.) 3.7.50 - 3.7.59	3.7.30 - 3.7.38	Fault signal dependent / delayed				DI2 = 1: faultless status DI2 = 0: internal fault signal is not set as long as the motor is not started, delay time starts earliest with motor start, internal fault signal stops motor Restart is possible only after fault acknowledge	during motor off

Menü No.	Display	Delay time	Menü No.	Display	Delay time
3.7.30	P.030	1 s	3.7.35		32 s
3.7.31	...	2 s	3.7.36		64 s
3.7.32		4 s	3.7.37		128 s
3.7.33		8 s	3.7.38		255 s
3.7.34		16 s			

	3.7.39	reserved	P.039			reserved
	3.7.40 - 3.7.48	Motor off dependent / delayed				DI2 = 1: motor is not stopped DI2 = 0: motor start is not blocked, delay time starts earliest with motor start, after delay time motor is stopped.

Menü No.	Display	Delay time	Menü No.	Display	Delay time
3.7.40	P.040	1 s	3.7.45		32 s
3.7.41	...	2 s	3.7.46		64 s
3.7.42		4 s	3.7.47		128 s
3.7.43		8 s	3.7.48		255 s
3.7.44		16 s			

	3.7.49	reserved	P.049			reserved
	3.7.50 - 3.7.59	Earth fault monitoring warning only				

Menü No.	Display	Delay time	Menü No.	Display	Delay time
3.7.50	P.050	1 s	3.7.54	P.054	16 s
3.7.51	P.051	2 s	3.7.55-3.7.59	P.055_ P.059	25 s
3.7.52	P.052	4 s			
3.7.53	P.053	8 s			

Par. No.	Menu No.	Menu point name	Display: 7-segm.	Default	Range	Description / remark	take over
21 (cont.)	3.7.60 - 3.7.69	Earth fault monitoring trip and warning					during motor off

Menü No.	Display	Delay time	Menü No.	Display	Delay time
3.7.60	P.060	1 s	3.7.64	P.064	16 s
3.7.61	P.061	2 s	3.7.65- 3.7.69	P.065_ P.069	25 s
3.7.62	P.062	4 s			
3.7.63	P.063	8 s			

	3.7.70 - 3.7.79	Earth fault monitoring warning with start-up inhibit					

Menü No.	Display	Delay time	Menü No.	Display	Delay time
3.7.70	P.070	1 s	3.7.74	P.074	16 s
3.7.71	P.071	2 s	3.7.75- 3.7.79	P.075_ P.079	25 s
3.7.72	P.072	4 s			
3.7.73	P.073	8 s			

	3.7.80 - 3.7.89	Earth fault monitoring trip and warning with start-up inhibit					

Menü No.	Display	Delay time	Menü No.	Display	Delay time
3.7.80	P.080	1 s	3.7.84	P.084	16 s
3.7.81	P.081	2 s	3.7.85- 3.7.89	P.085_ P.089	25 s
3.7.82	P.082	4 s			
3.7.83	P.083	8 s			

24	3.8	**Fault output** (5.3.4)	F.out			UMC22 output D02 can be used for fault indication.	during motor off
	3.8.0	off	F o.oF	off		Fault output is not activated. DO2 free available.	
	3.8.1	on	F o.on			Fault output is activated. DO2 used for fault indication (lights steady)	
	3.8.2	flashing	F o.bL			Fault output is activated. DO2 used for fault indication (flashing)	

Par. No.	Menu No.	Menu point name	Display: 7-segm.	Default	Range	Description / remark	take over
15	3.9	**Star-delta changeover mode**	Sd,ch			**Only for star-delta starter!**	during motor off
		Start surveying time (5.3.4)				**Only for actuator 1-4!**	
	3.9.1	Time	Sd,t,			**For star-delta starter:** Change from star to delta, when star-delta starting time is over. **For actuator 1-4:** Start surveying time fixed = 3 s.	
	3.9.2	Current	Sd,cu	Current		**For star-delta starter:** Change from star to delta, when motor current ≤ 0,9 x Set current. **Remark:** Current check-back fault is generated if the star-delta starting time has elapsed before switching to delta. **For actuator 1-4:** Start surveying time adjustable = 3 s + 12.5 % of parameter *Run-time limit (Star-delta starting time)*.	

11	3.10	**Automatic fault reset** (5.3.4)	A,-ES			Only for control function Overload relay due to safety considerations.	during motor off
	3.10.0	Off	A,-oF	Off		Automatic fault reset is not activated. Acknowledge via Control Panel or fieldbus necessary to reset fault. To switch on again, cooling time must be elapsed.	
	3.10.1	On	A,-on			Automatic fault reset is activated. Automatic reset of Fault when fault condition is off and Cooling time has elapsed. Fault is not monitored.	

-	3.11	**Bus connection** (5.3.4)	buco			Not a parameter, only for stand alone operation without fieldbus. Allows to use the UMC22 without FieldBusPlug, e.g. as Overload relay. → → continued → →	power up transition
-	3.11.0	Stand alone	buoF			Stand alone operation without fieldbus, controlled by digital inputs and Control Panel	power up transition
	3.11.1	Connected to the fieldbus	buon	On		Operation with fieldbus	

Par. No.	Menu No.	Menu point name	Display: 7-segm.	Default	Range	Description / remark	take over
-	3.12	**Bus fault reaction** (5.3.4)	bu.Fr			All cases when UMC22 does not receive valid telegrams, either when the control system or the fieldbus or the FieldBusPlug is out of order or interrupted.	during motor off
	3.12.1	Relays off	b.oFF	Relays off		Relay outputs of UMC22 will be switched off if a bus fault occurs.	
	3.12.2	Relays retain status	b.rEt			Relay outputs of UMC22 retain their status if a bus fault occurs.	
-	3.13	**Parameter lock** (5.3.4)	PA.Lo			Locks writing all parameters via control system / fieldbus and via Control Panel	immediately
	3.13.1	Parameter enabled	P.EnA	Off		Writing parameters enabled	
	3.13.2	Parameter locked	P.Loc			Writing parameters locked	
-	3.14	**Parameter transfer** (5.3.4)	PA.tr			All parameter information - exept the Slave address, Operation hours, Number of starts and Number of trips - can be read out from or write into the UMC22.	power up transition
	3.14.1	Read parameters	PA.rE			Control Panel reads out all parameter information from an UMC22.	
	3.14.2	Set parameters	PA.SE			Control Panel overwrites all parameter information in the UMC22.	
-	3.15	**Reset to Default** (5.3.4)	rESE				power up transition
	3.15.1	execute	rESE			Sets all parameter values to default values exept the parameters Address, Number of starts, Number of trips and Operating hours.	

10. Index

Absolute current, display on the Control Panel 9.1.3
Addressing 3.3.1
Bus data 5.2
  Diagnosis (Telegram) 5.2.1, 5.2.4
  Commands (Telegram) 5.2.1, 5.2.3
  Faults (Telegram) 5.2.1, 5.2.4
  Monitoring data (Telegram) 5.2.1, 5.2.2
  Warnings (Telegram) 5.2.1, 5.2.4
Compatibiliy 1.7
Contactors, connection of 3.2.2
Control functions 8
  Actuator 1-4 ..... 8.8
  Direct starter 8.3
  Overload relay 8.2
  Pole-changing starter 8.7
    Dahlander starter 8.7.1
    Two-pole motor starter 8.7.1
  Reversing starter 8.4
  Star-delta starter 1 ..... 8.5
  Star-delta starter 2 ..... 8.6
  Transparent mode 8.1
Earth fault protection 3.5
External current transformer, use of 3.2.4
Fault indication 3.7.4
Faults displayed on the Control Panel 9.2.1, 3.7.4
Getting started ..... 8.3.1, 8.4.1, ...
Higher currents, above 63 A 3.2.4
Local control 9.1
  Direct panel control 9.1.3
  Local control via digital inputs ..... 8.3.1, 8.4.1, ..., 3.4.1
  Password panel control 9.1.1
  Simplified control via Control Panel 9.1.3
Multi function input, application example 3.4.2
Operating mode - automatic, manual 3.4.1
Panel (Control Panel) 9.1

10. Index (continued)

Parameters 5.3, 9.2
Current factor 3.2.4, 5.3.4
Multi-function inputs DI0, DI1 and DI2 ..... 5.3.4, 9.2.3
Fault signal delayed 5.3.4, 9.2.3
Operation hours 5.3.4, 9.2.2
Parameter transfer 5.3.4, 9.2.3
Phase loss protection 5.3.4, 9.2.3
PTC protection 5.3.4, 9.2.3, 3.6
Starts, number of 5.3.4, 9.2.2
Trips, number of 5.3.4, 9.2.2
PTC / Thermistor protection 3.6
Supply 3.2.1
Switch on and off motor 3.4
Trip diagrams 6.1

Manual No. 2CDC 135 004 D0206 (09.2008)

ABB STOTZ-KONTAKT GmbH

Eppelheimer Straße 82
69123 Heidelberg
Germany

Postfach 101680
69006 Heidelberg
Germany

Telephone +49 (0) 6221 701- 0
Telefax +49 (0) 6221 701- 240
E-mail automation-helpline.desto@de.abb.com
Internet http://www.abb.de/stotz-kontakt