Examples of connections

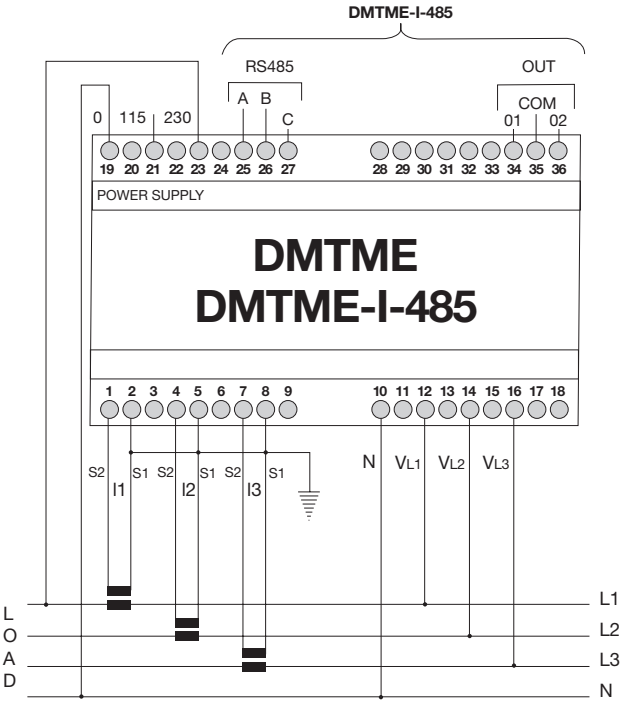

LV three-phase connection with neutral

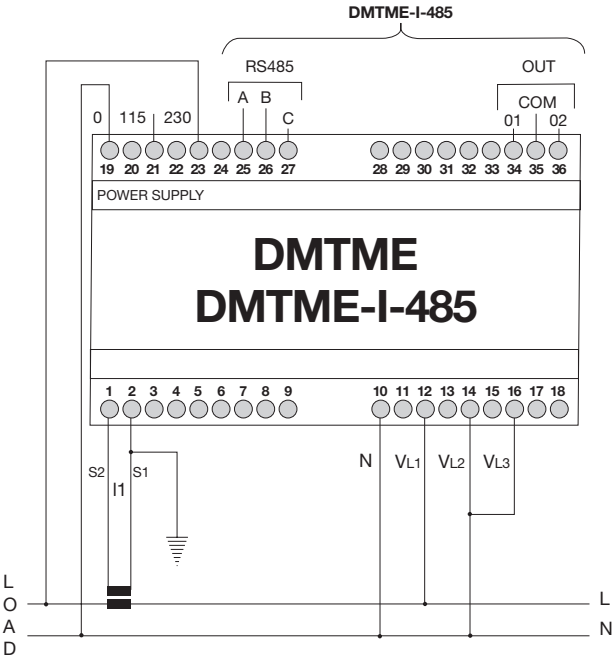

LV single-phase connection with neutral
NOTE: in single-phase connections the phase-to-phase quantities are not significant.

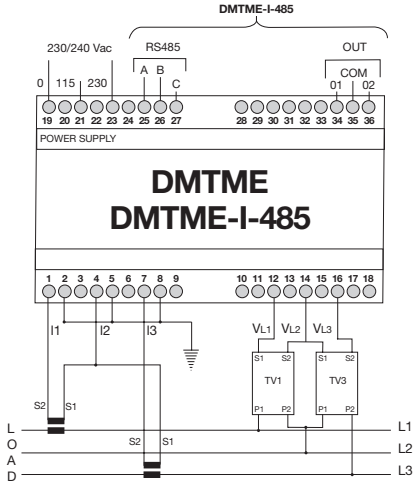

Three-phase connection without neutral, with 2TA and 2TV

Terminal board connections

Terminal	Description	Terminal	Description	Terminal	Description
19	0 ~ power sup.	1	S2 – input I1	10	N – Voltmeter inp.
21	115 ~ power sup.	2	S1 – input I1	12	L1 – Voltmeter inp.
23	230 ~ power sup.	4	S2 – input I2	14	L2 – Voltmeter inp.
25 (*)	A (+) RS485	5	S1 – input I2	16	L3 – Voltmeter inp.
26 (*)	B (-) RS485	7	S2 – input I3	34 (*)	Digital Out 1 (pulse kWh/ alarm 1)
27 (*)	Shield RS485	8	S1 – input I3	35 (*)	Digital Out common
				36 (*)	Digital Out 2 (pulse kVArh/alarm 2)

(*) Terminals 25, 26, 27, 34, 35 and 36 are meaningful only for the DMTME-I-485 model.

Size of terminals: 2,5 mm^2