DCT880
Demo Unit

Power and productivity
for a better world™

Commissioning instructions using Control Panel or Drive composer

General

Order number DCT880 Demo Unit: 3ADT203036R0003
Single-phase mains of either 230 V_{AC} or 115 V_{AC} is needed.

Set default (factory) settings

Before starting all parameters must be set to default (factory):

Parameter	Value
99.07 ApplMacro	Factory reset

Adapt the demo unit

Parameter	Value
99.01 Supply Voltage	230 V or 115 V
99.02 Load Current	10 A
99.03 Load Voltage	230 V
99.04 Supply configuration	3 x 1ph + N 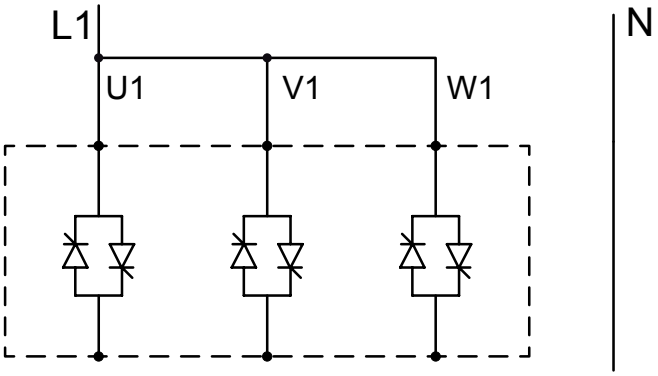
99.05 Load Configuration	3 x 1ph loads 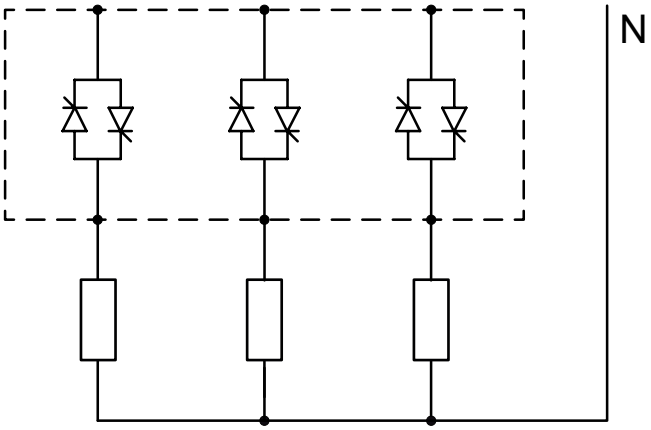
10.24 RO1 source	Other: 06.13.1- 06.13 Global Status Word; bit 1 (Any Fault); inverted
11.05 DIO1 function	Input
11.09 DIO2 function	Input

Leg 1

Adapt control mode

Parameter	Value
99.10 Leg 1 Control Mode	Full Wave Fix Cycle

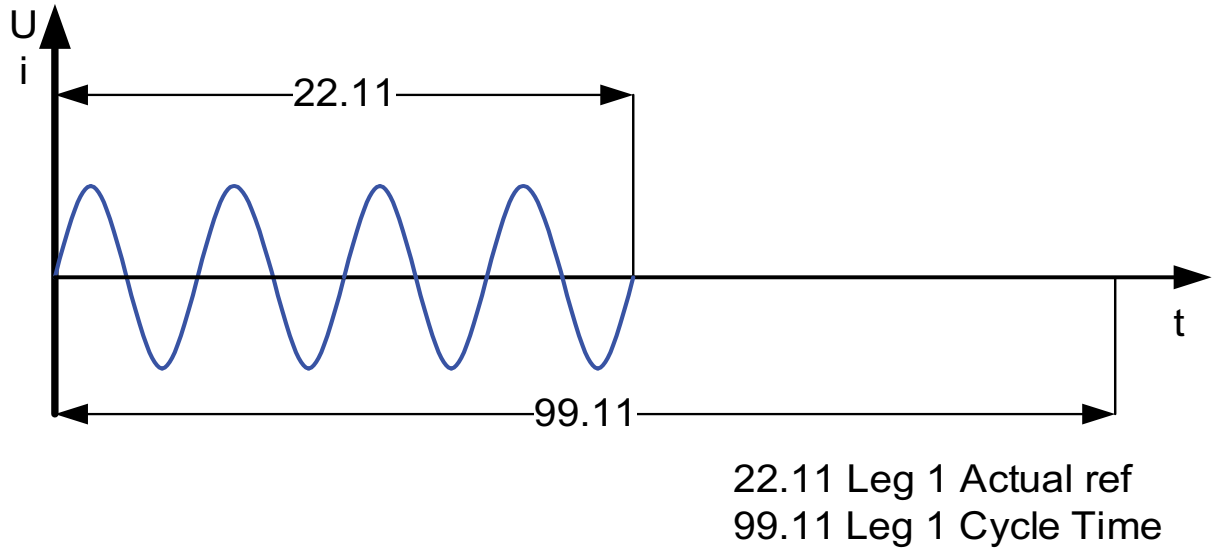

99.11 Leg 1 Cycle Time	200 Periods
99.12 Leg 1 Start Mode	Normal

This is the reaction of the lamp:

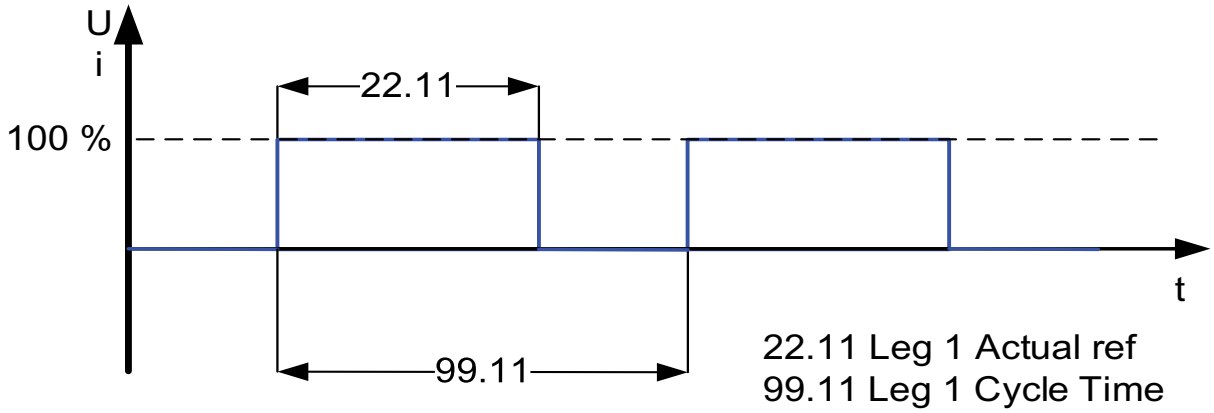

Leg 1

Adapt reference chain

Parameter	Value
22.15 Leg 1 Cha A Main ref Selector	AI1 scaled (12.12) (default) 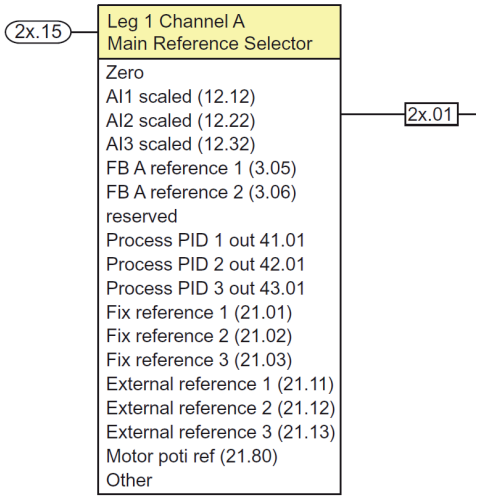 **Attention:** The reference has to be positive (voltage of AI1 must be positive)
22.16 Leg 1 Cha A Main ref Mux	Close (default) 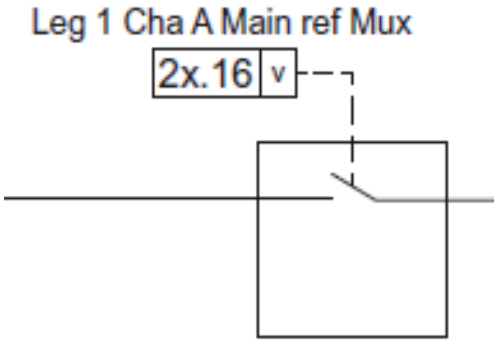
22.17 Leg 1 Cha A Main ref inversion	Normal (default) 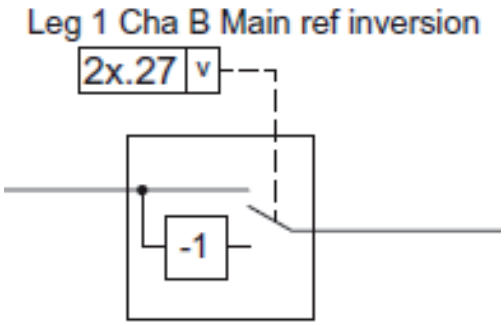

Leg 1

22.35 Leg 1 Cha A / Cha B Selector	Channel A (default) 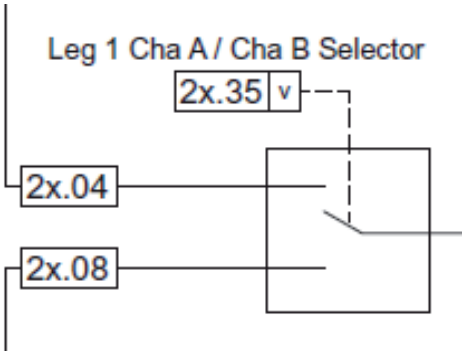
22.37 Leg 1 Panel / Remote Selector	Auto (default) 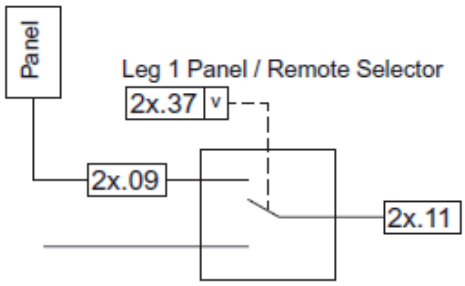
30.20 Leg 1 Current Limit	Disabled (default) 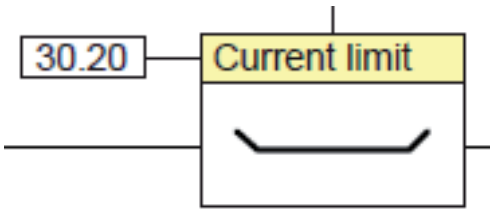

Leg 1

Adapt command chain

Parameter	Value
19.01 Leg 1 Enable Local I/O	DI1 (default)
19.02 Leg 1 Run Local I/O	DI2 (default)
19.10 Leg 1 Command Location Selector	Hardware DI (default)
	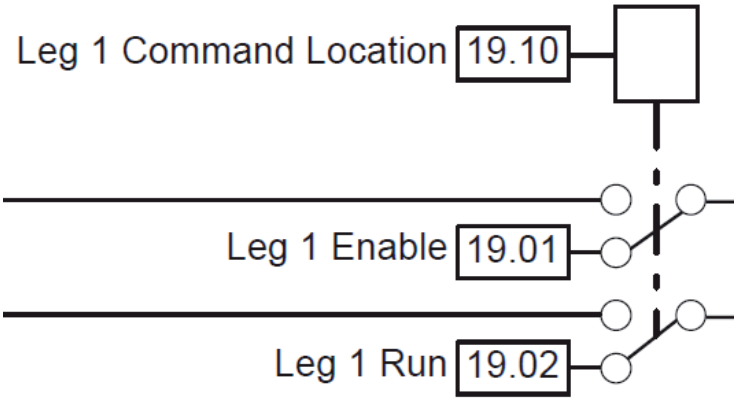
19.15 Reset	DI3 (default)
19.30 Common Control Selector	Separate (default)
	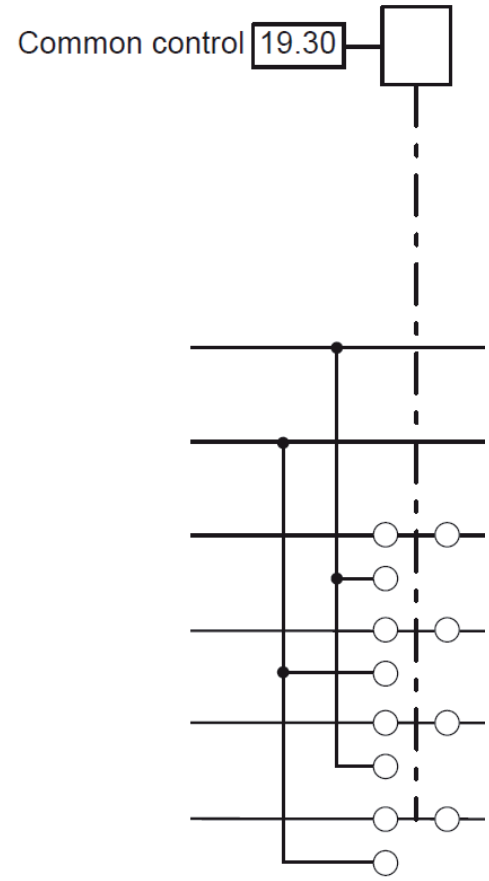

Leg 2

Adapt control mode

Parameter	Value
99.25 Leg 2 Control Mode	Full Wave Fix Cycle

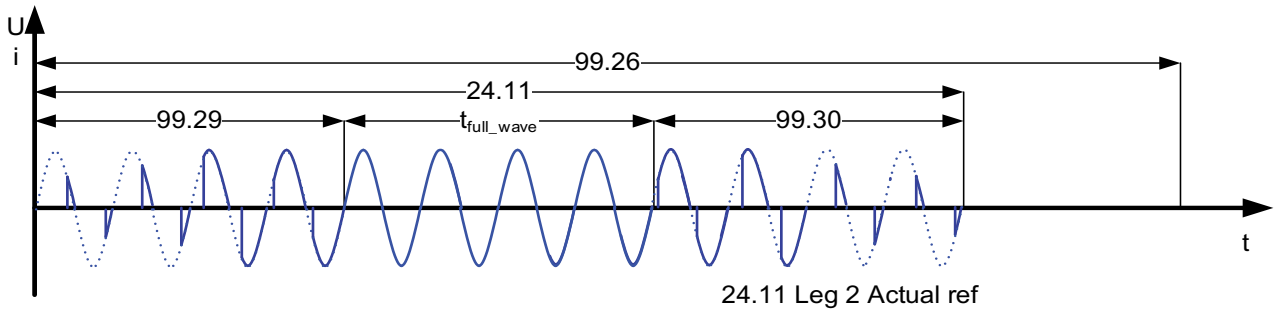

24.11 Leg 2 Actual ref
99.26 Leg 2 Cycle Time
99.29 Leg 2 Burst Soft Start Ramp
99.30 Leg 2 Burst Soft Down Ramp
$t_{full\ wave}$, time where the full wave is at the load

99.26 Leg 2 Cycle Time	200 Periods
99.27 Leg 2 Start Mode	Soft Start / Soft Down (default)
99.29 Leg 2 Burst Soft Start Ramp	60 Periods
99.30 Leg 2 Burst Soft Down Ramp	60 Periods

This is the reaction of the lamp:

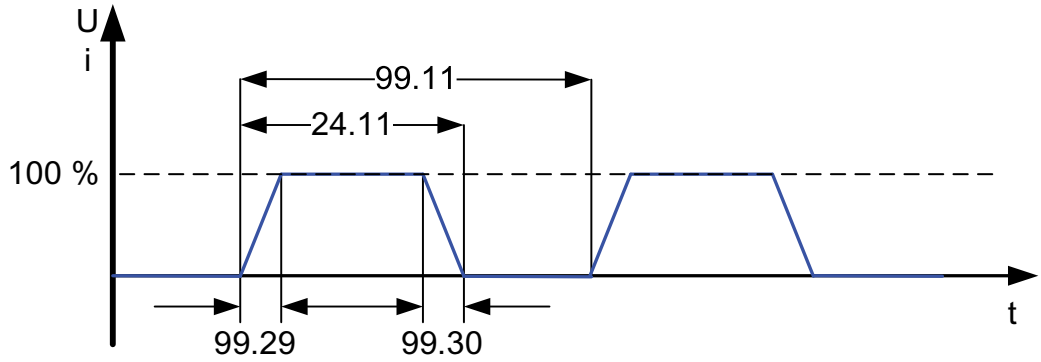

24.11 Leg 2 Actual ref
99.26 Leg 2 Cycle Time
99.29 Leg 2 Burst Soft Start Ramp
99.30 Leg 2 Burst Soft Down Ramp
$t_{full\ wave}$, time where the full wave is at the load

Leg 2

Adapt reference chain

Parameter	Value
24.15 Leg 2 Cha A Main ref Selector	AI2 scaled (12.22) Attention: The reference has to be positive (voltage of AI2 must be positive)
24.16 Leg 2 Cha A Main ref Mux	Close (default)
24.17 Leg 2 Cha A Main ref inversion	Normal (default)
24.35 Leg 2 Cha A / Cha B Selector	Channel A (default)
24.37 Leg 2 Panel / Remote Selector	Auto (default)
31.20 Leg 2 Current Limit	Disabled (default)

Adapt command chain

Parameter	Value
19.03 Leg 2 Enable Local I/O	DI5
19.04 Leg 2 Run Local I/O	DI6
19.11 Leg 2 Command Location Selector	Hardware DI (default)
19.15 Reset	DI3 (default)
19.30 Common Control Selector	Separate (default)

Leg 3

Adapt control mode

Parameter	Value
99.40 Leg 3 Control Mode	U α Open loop control (default)

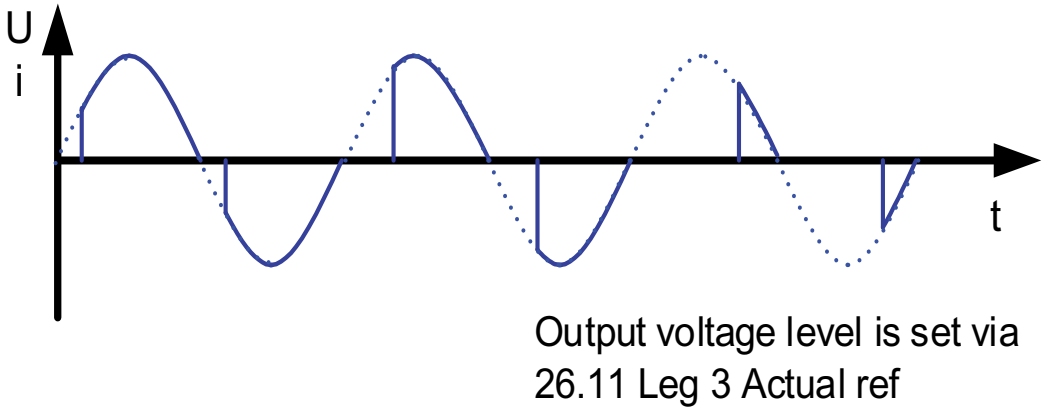

This is the reaction of the lamp:

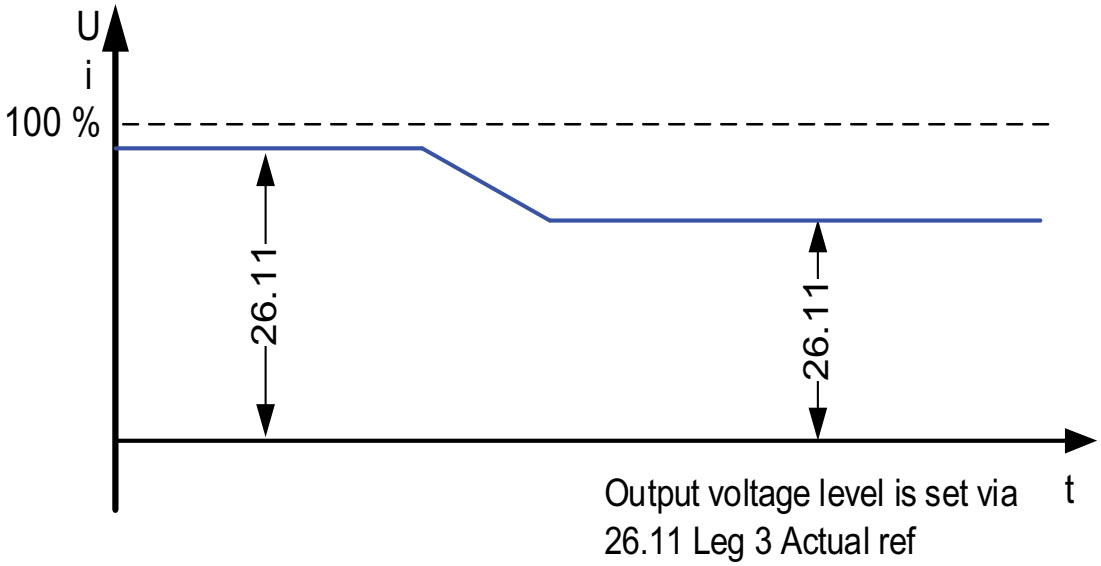

Adapt reference chain

Parameter	Value
26.15 Leg 3 Cha A Main ref Selector	AI3 scaled (12.32) Attention: The reference has to be positive (voltage of AI3 must be positive)
26.16 Leg 3 Cha A Main ref Mux	Close (default)
26.17 Leg 3 Cha A Main ref inversion	Normal (default)
26.35 Leg 3 Cha A / Cha B Selector	Channel A (default)
26.37 Leg 3 Panel / Remote Selector	Auto (default)
32.20 Leg 3 Current Limit	Disabled (default)

Adapt command chain

Parameter	Value
19.05 Leg 3 Enable Local I/O	DIO1
19.06 Leg 3 Run Local I/O	DIO2
19.12 Leg 3 Command Location Selector	Hardware DI (default)
19.15 Reset	DI3 (default)
19.30 Common Control Selector	Separate (default)

Drive composer

Drive composer settings

This is a screenshot using Drive composer pro.

- Black shows leg 1 (constant reference): 1.13 Voltage U2 - N actual
- Red shows leg 2 (constant reference): 1.14 Voltage V2 - N actual
- Green shows leg 3 (reference is lowered): 1.15 Voltage W2 - N actual

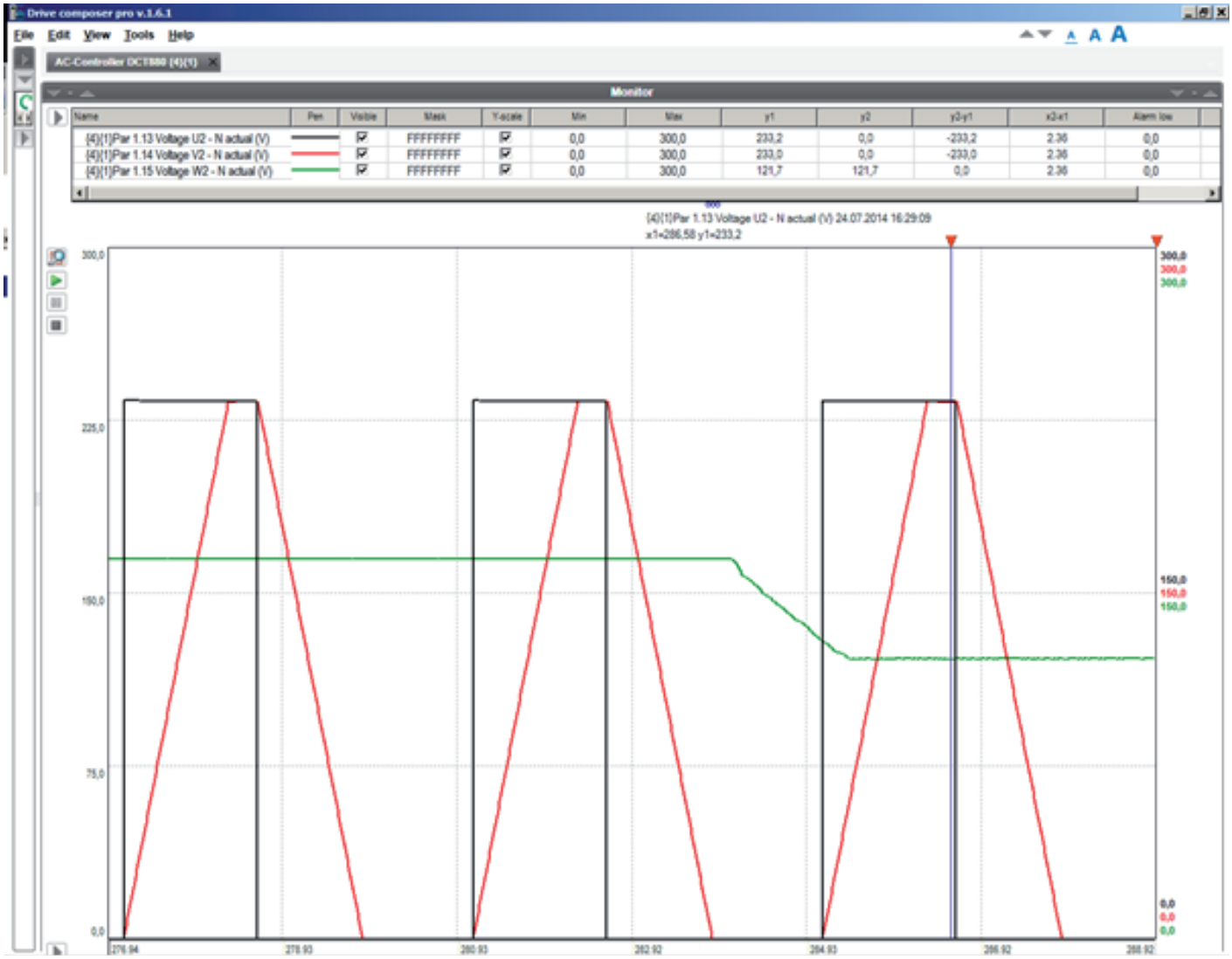

DCT880 Demo Unit Dimensions and Weight

Dimensions		
H	W	D
680 mm	360 mm	350 mm
27 inch	15 inch	14 inch
Weight: 27 kg / 60 lbs		

Order number DCT880 Demo Unit

3ADT203036R0003

Single line

DCT880 Demo Unit single-phase

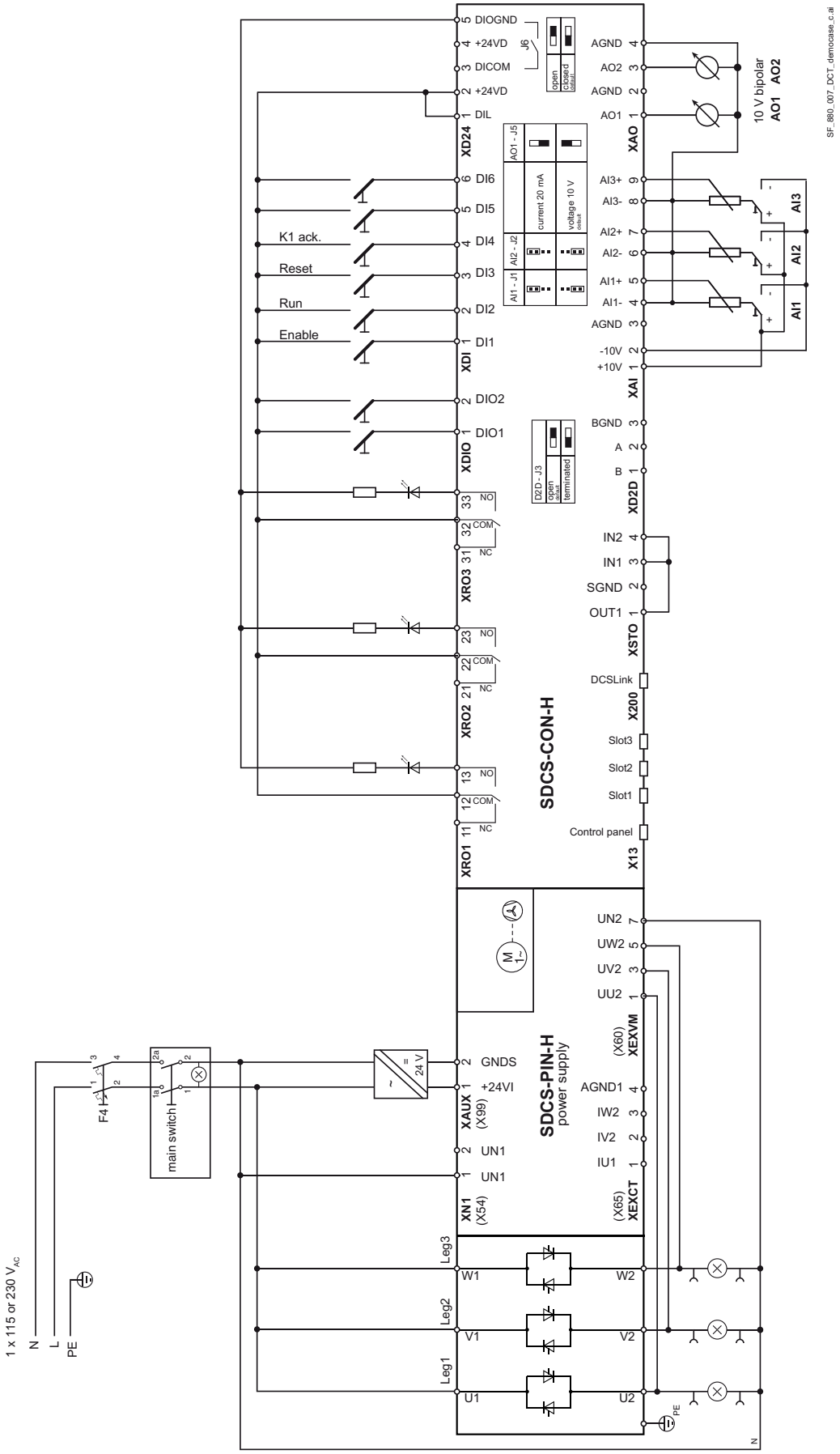

Contact us

ABB Automation Products GmbH
Motors and Drives
Wallstadter Straße 59
D-68526 Ladenburg
Germany
Phone: +49 (0) 6203 71 7608
Fax: +49 (0) 6203 71 7609
dc-drives@de.abb.com
www.abb.com/drives

© Copyright 2015 ABB. All rights reserved. 3ADW000434R0301 Rev C 04.2015 Specifications subject to change without notice.

Power and productivity
for a better world™