ABB drives for HVAC

Hardware manual
ACH580-01 drives
(0.75 to 250 kW, 1 to 350 hp)

Power and productivity
for a better world™

List of related manuals

Drive manuals and guides	Code (English)
ACH580 HVAC control program firmware manual	*3AXD50000027537*
ACH580-01 (0.75 to 250 kW, 1 to 350 hp) hardware manual	*3AUA0000076331*
ACH580-01 quick installation and start-up guide for frames R0 to R5	*3AUA0000076330*
ACH580-01 quick installation and start-up guide for frames R6 to R9	*3AXD50000036602*
ACS-AP-x assistant control panels user's manual	*3AUA0000085685*

Option manuals and guides	
CPTC-02 ATEX-certified thermistor protection module, Ex II (2) GD (+L537+Q971) user's manual	*3AXD50000032016*
CDPI-01 communication adapter module user's manual	*3AXD50000009929*
DPMP-01 mounting platform for ACS-AP control panel	*3AUA0000100140*
DPMP-02/03 mounting platform for ACS-AP control panel	*3AUA0000136205*
FBIP-21 BACnet/IP adapter module	*3AXD50000028468*
FCAN-01 CANopen adapter module user's manual	*3AFE68615500*
FCNA-01 ControlNet adapter module user's manual	*3AUA0000141650*
FDNA-01 DeviceNet™ adapter module user's manual	*3AFE68573360*
FECA-01 EtherCAT adapter module user's manual	*3AUA0000068940*
FENA-01/-11/-21 Ethernet adapter module user's manual	*3AUA0000093568*
FEPL-02 Ethernet POWERLINK adapter module user's manual	*3AUA0000123527*
FLON-01 LonWorks® adapter module user's manual	*3AUA0000041017*
FPBA-01 PROFIBUS DP adapter module user's manual	*3AFE68573271*
FSCA-01 RS-485 adapter module user's manual	*3AUA0000109533*
Flange mounting kit installation supplement	*3AXD50000019100*
Flange mounting kit quick installation guide for ACX580-01 frames R0 to R5	*3AXD50000036610*
Flange mounting kit quick installation guide for ACS880-01 and ACX580-01 frames R6 to R9	*3AXD50000019099*

Tool and maintenance manuals and guides	
Drive composer PC tool user's manual	*3AUA0000094606*
Converter module capacitor reforming instructions	*3BFE64059629*
NETA-21 remote monitoring tool user's manual	*3AUA00000969391*
NETA-21 remote monitoring tool installation and start-up guide	*3AUA0000096881*

You can find manuals and other product documents in PDF format on the Internet. See section *Document library on the Internet* on the inside of the back cover. For manuals not available in the Document library, contact your local ABB representative.

ACH580-01 manuals

Hardware manual

ACH580-01 drives
(0.75 to 250 kW, 1 to 350 hp)

Table of contents

1. Safety instructions

4. Mechanical installation

6. Electrical installation

© 2016 ABB Oy. All Rights Reserved.

3AUA0000076331 Rev B
EN
EFFECTIVE: 2016-04-14

Table of contents

List of related manuals 2

1. Safety instructions

Contents of this chapter 13
Use of warnings and notes in this manual 13
General safety in installation, start-up and maintenance 14
Electrical safety in installation, start-up and maintenance 16
Precautions before electrical work 16
Additional instructions and notes 17
Grounding 18
Additional instructions for permanent magnet motor drives 19
Safety in installation, start-up and maintenance 19
General safety in operation 20

2. Introduction to the manual

Contents of this chapter 21
Applicability 21
Target audience 21
Purpose of the manual 21
Contents of this manual 22
Related documents 22
Categorization by frame (size) 23
Quick installation and commissioning flowchart 24

3. Operation principle and hardware description

Contents of this chapter 27
Operation principle 28
Layout 29
Overview of power and control connections 31
External control connection terminals, frames R0…R5 32
External control connection terminals, frames R6…R9 33
Control panel 34
Type designation label 35
Locations of the labels on the drive 36
Type designation key 37

4. Mechanical installation

Contents of this chapter 39
Safety 39
Checking the installation site 40
Required tools 42
Moving the drive 42
Unpacking and examining delivery, frames R0…R4 43

Unpacking and examining delivery, frame R5 44
Frame R5 cable box (IP21, UL Type 1) 45
Unpacking and examining delivery, frames R6…R9 46
Frame R6 cable box (IP21, UL Type 1) 47
Frame R7 cable box (IP21, UL Type 1) 48
Frame R8 cable box (IP21, UL Type 1) 49
Frame R9 cable box (IP21, UL Type 1) 50
Installing the drive 51
Installing the drive vertically, frames R0…R4 51
Installing the drive vertically, frame R5 53
Installing the drive vertically, frames R6…R9 56
Installing the drive vertically side by side 57
Installing the drive horizontally, frames R0…R3 57
Flange mounting 58

5. Planning the electrical installation

Contents of this chapter 59
Selecting the supply disconnecting device 59
European Union 59
Other regions 60
Checking the compatibility of the motor and drive 60
Selecting the power cables 60
General rules 60
Typical power cable sizes 61
Alternative power cable types 62
Motor cable shield 63
Additional US requirements 63
Selecting the control cables 64
Shielding 64
Signals in separate cables 64
Signals allowed to be run in the same cable 64
Relay cable 65
Control panel cable 65
Drive composer PC tool cable 65
FPBA-01 PROFIBUS DP adapter module connectors 65
Routing the cables 66
General rules 66
Separate control cable ducts 67
Continuous motor cable shield or enclosure for equipment on the motor cable 67
Implementing thermal overload and short-circuit protection 68
Protecting the drive and input power cable in short-circuits 68
Protecting the motor and motor cable in short-circuits 68
Protecting the drive and the input power and motor cables against thermal overload . . . 68
Protecting the motor against thermal overload 68
Protecting the drive against ground faults 69
Residual current device compatibility 69
Implementing the Emergency stop function 69
Implementing the Safe torque off function 69
Implementing the undervoltage control (power-loss ride-through) 69
Using a safety switch between the drive and the motor 70

Using a contactor between the drive and the motor 70
Protecting the contacts of relay outputs 70
Limiting relay output maximum voltages at high installation altitudes 71

6. Electrical installation

Contents of this chapter 73
Warnings 73
Required tools 73
Checking the insulation of the assembly 74
Drive 74
Input power cable 74
Motor and motor cable 74
Brake resistor assembly for R0…R3 75
Checking the compatibility with IT (ungrounded) and corner-grounded TN systems 75
EMC filter 75
Ground-to-phase varistor 76
Frames R0…R3 77
Frames R4…R9 78
Connecting the power cables 80
Connection diagram 80
Connection procedure, frames R0…R4 81
Connection procedure, frame R5 90
Connection procedure, frames R6…R9 96
DC connection 100
Connecting the control cables 101
Default I/O connection diagram (HVAC default configuration) 102
Control cable connection procedure R0…R9 111
Installing option modules 117
Mechanical installation of option modules 117
Wiring the modules 119
Reinstalling covers 120
Reinstalling cover, frames R0…R4 120
Reinstalling covers, frame R5 121
Reinstalling side plates and covers, frames R6…R9 122
Connecting a PC 123

7. Installation checklist

Contents of this chapter 125
Warnings 125
Checklist 125

8. Maintenance and hardware diagnostics

Contents of this chapter 127
Maintenance intervals 127
Description of symbols 128
Recommended annual maintenance actions by the user 128
Recommended maintenance actions by the user 128
Heatsink 129

Fans . . . 130
Replacing the main cooling fan, frames R0…R4 . . . 130
Replacing the main cooling fan, frames R5…R8 . . . 132
Replacing the main cooling fans, frame R9 . . . 133
Replacing the auxiliary cooling fan, frames R5…R9 . . . 134
Replacing the auxiliary cooling fan, IP55 (UL Type 12) frames R0…R2 . . . 135
Replacing the auxiliary cooling fan, IP55 (UL Type 12) frames R3 . . . 136
Replacing the auxiliary cooling fan, IP55 (UL Type 12) frames R4 . . . 137
Replacing the auxiliary cooling fan, IP55 (UL Type 12) frames R8…R9 . . . 138
Capacitors . . . 139
Reforming the capacitors . . . 139
Control panel . . . 140
Cleaning the control panel . . . 140
Replacing the battery in the control panel . . . 140
LEDs . . . 141
Drive LEDs . . . 141
Control panel LEDs . . . 142

9. Technical data

Contents of this chapter . . . 143
Ratings . . . 144
IEC ratings . . . 144
NEMA ratings . . . 145
Definitions . . . 145
Sizing . . . 146
Derating . . . 146
Ambient temperature derating, IP21 (UL Type 1) . . . 147
Ambient temperature derating, IP55 (UL Type 12) . . . 148
Switching frequency derating . . . 150
Altitude derating . . . 150
Fuses (IEC) . . . 151
gG fuses . . . 152
uR and aR fuses . . . 153
Fuses (UL) . . . 154
Circuit breakers . . . 155
Dimensions, weights and free space requirements . . . 156
Losses, cooling data and noise . . . 159
Cooling air flow and heat dissipation for flange mounting (option +C135) . . . 160
Terminal and lead-through data for the power cables . . . 161
IEC . . . 161
US . . . 163
Terminal and lead-through data for the control cables . . . 165
IEC . . . 165
US . . . 165
Electrical power network specification . . . 166
Voltage (U1) . . . 166
Motor connection data . . . 166
Brake resistor connection data for frames R0…R3 . . . 169
Control connection data . . . 169
Efficiency . . . 175

Degree of protection . . . 175
Ambient conditions . . . 175
Materials . . . 177
Applicable standards . . . 177
CE marking . . . 179
Compliance with the European Low Voltage Directive . . . 179
Compliance with the European EMC Directive . . . 179
Compliance with the European ROHS II Directive 2011/65/EU . . . 179
Compliance with the European Machinery Directive 2006/42/EC 2nd Edition – June 2010 . . . 179
Compliance with the EN 61800-3:2004 + A1:2012 . . . 180
Definitions . . . 180
Category C1 . . . 180
Category C2 . . . 181
Category C3 . . . 181
Category C4 . . . 182
RCM marking . . . 183
EAC marking . . . 183
Disclaimer . . . 183
Cyber security disclaimer . . . 183

10. Dimension drawings

Contents of this chapter . . . 185
Frame R0, IP21 (UL Type 1) . . . 186
Frame R0, IP55 (UL Type 12) . . . 187
Frame R1, IP21 (UL Type 1) . . . 188
Frame R1, IP55 (UL Type 12) . . . 189
Frame R2, IP21 (UL Type 1) . . . 190
Frame R2, IP55 (UL Type 12) . . . 191
Frame R3, IP21 (UL Type 1) . . . 192
Frame R3, IP55 (UL Type 12) . . . 193
Frame R4, IP21 (UL Type 1) . . . 194
Frame R4, IP55 (UL Type 12) . . . 195
Frame R5, IP21 (UL Type 1) . . . 196
Frame R5, IP55 (UL Type 12) . . . 197
Frame R6, IP21 (UL Type 1) . . . 198
Frame R6, IP55 (UL Type 12) . . . 199
Frame R7, IP21 (UL Type 1) . . . 200
Frame R7, IP55 (UL Type 12) . . . 201
Frame R8, IP21 (UL Type 1) . . . 202
Frame R8, IP55 (UL Type 12) . . . 203
Frame R9, IP21 (UL Type 1) . . . 204
Frame R9, IP55 (UL Type 12) . . . 205

11. Resistor braking

Contents of this chapter . . . 207
Operation principle and hardware description . . . 207
Resistor braking, frames R0…R3 . . . 208
Planning the braking system . . . 208

Mechanical installation . . . 212
Electrical installation . . . 212
Start-up . . . 213
Resistor braking, frames R4…R9 . . . 214
Planning the braking system . . . 214

12. Safe torque off function

What this chapter contains . . . 215
Description . . . 215
Compliance with the European Machinery Directive . . . 216
Connection principle . . . 217
Connection with internal +24 V DC power supply . . . 217
Connection with external +24 V DC power supply . . . 217
Wiring examples . . . 218
Activation switch . . . 218
Cable types and lengths . . . 219
Grounding of protective shields . . . 219
Operation principle . . . 219
Start-up including acceptance test . . . 220
Authorized person . . . 220
Acceptance test reports . . . 220
Acceptance test procedure . . . 221
Use . . . 222
Maintenance . . . 223
Fault tracing . . . 223
Safety data . . . 224
Abbreviations . . . 226
Declaration of conformity . . . 226
Certificate . . . 226

13. Optional I/O extension modules

What this chapter contains . . . 227
CHDI-01 115/230 V digital input extension module . . . 227
Safety instructions . . . 227
Hardware description . . . 227
Mechanical installation . . . 228
Electrical installation . . . 229
Start-up . . . 231
Diagnostics . . . 231
Technical data . . . 232
CMOD-01 multifunction extension module (external 24 V AC/DC and digital I/O) . . . 234
Safety instructions . . . 234
Hardware description . . . 234
Mechanical installation . . . 235
Electrical installation . . . 236
Start-up . . . 238
Diagnostics . . . 239
Technical data . . . 240

CMOD-02 multifunction extension module (external 24 V AC/DC and isolated PTC interface) 242
Safety instructions 242
Hardware description 242
Mechanical installation 243
Electrical installation 244
Start-up 246
Diagnostics 247
Technical data 248

Further information

Product and service inquiries 251
Product training 251
Providing feedback on ABB Drives manuals 251
Document library on the Internet 251

1

Safety instructions

Contents of this chapter

This chapter contains the safety instructions which you must obey when you install and operate the drive and do maintenance on the drive. If you ignore the safety instructions, injury, death or damage can occur.

Use of warnings and notes in this manual

Warnings tell you about conditions which can cause injury or death, or damage to the equipment. They also tell you how to prevent the danger. Notes draw attention to a particular condition or fact, or give information on a subject.

The manual uses these warning symbols:

	Electricity warning tells about hazards from electricity which can cause injury or death, or damage to the equipment.
	General warning tells about conditions, other than those caused by electricity, which can cause injury or death, or damage to the equipment.
	Electrostatic sensitive devices warning tells you about the risk of electrostatic discharge which can cause damage to the equipment.

General safety in installation, start-up and maintenance

These instructions are for all personnel that install the drive and do maintenance work on it.

WARNING! Obey these instructions. If you ignore them, injury or death, or damage to the equipment can occur.

- Use safety shoes with a metal toe cap to avoid foot injury. Wear protective gloves and long sleeves. Some parts have sharp edges.
- Handle the drive carefully.
  - Frames R5…R9: Lift the drive with a lifting device. Use the lifting eyes of the drive.
  - Frames R5…R9: Do not tilt the drive. The drive is heavy and its center of gravity is high. An overturning drive can cause physical injury.

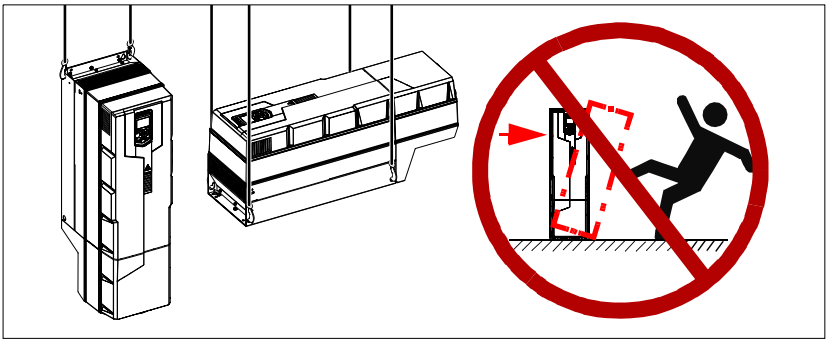

- Beware of hot surfaces. Some parts, such as heatsinks of power semiconductors, remain hot for a while after disconnection of the electrical supply.
- Keep the drive in its package or protect it otherwise from dust and burr from drilling and grinding until you install it.
- Protect also the installed drive against dust and burr. Electrically conductive debris inside the drive may cause damage or malfunction.
- Vacuum clean the area below the drive before the start-up to prevent the drive cooling fan from drawing the dust inside the drive.
- Do not cover the air inlet and outlet when the drive runs.
- Make sure that there is sufficient cooling. See sections *Checking the installation site* on page *40* and *Losses, cooling data and noise* on page *159* for more information.
- Before you connect voltage to the drive, make sure that the drive covers are on. Keep the covers on during the operation.
- Before you adjust the drive operation limits, make sure that the motor and all driven equipment can operate throughout the set operation limits.

- Before you activate the automatic fault reset or automatic restart functions of the drive control program, make sure that no dangerous situations can occur. These functions reset the drive automatically and continue operation after a fault or supply break.
- The maximum number of drive power-ups is five in ten minutes. Too frequent power-ups can damage the charging circuit of the DC capacitors.
- If you have connected safety circuits to the drive (for example, emergency stop and Safe torque off), validate them at the start up. For the validation of the Safe torque off, see *ACH580 HVAC control program firmware manual* (3AXD50000027537 [English]). For the validation of other safety circuits, see the instructions provided with them.

Note:

- If you select an external source for start command and it is on, and the start command is level-triggered, the drive will start immediately after fault reset. See parameters 20.02 Ext1 start trigger type and 20.07 Ext2 start trigger type in *ACH580 HVAC control program firmware manual* (3AXD50000027537 [English]).
- When the control location is not set to Local (text Hand is not shown on the top row of the panel and parameter 19.19 Off mode disable has value Off button disabled), the stop key on the control panel will not stop the drive.
- Frames R0…R5 are not field repairable. Do not attempt to repair a malfunctioning drive; contact your local representative for replacement.

  Frames R6…R9 can be repaired by authorized persons.

Electrical safety in installation, start-up and maintenance

Precautions before electrical work

These warnings are for all personnel who do work on the drive, motor cable or motor.

WARNING! Obey these instructions. If you ignore them, injury or death, or damage to the equipment can occur. If you are not a qualified electrician, do not do electrical installation or maintenance work. Go through these steps before you begin any installation or maintenance work.

1. Clearly identify the work location.
2. Disconnect all possible voltage sources.
   - Open the main disconnector at the power supply of the drive.
   - Make sure that reconnection is not possible. Lock the disconnector to open position and attach a warning notice to the disconnector.
   - Disconnect any external power sources from the control circuits before you do work on the control cables.
   - After you disconnect the drive, always wait for 5 minutes to let the intermediate circuit capacitors discharge before you continue.
3. Protect any other energized parts in the work location against contact.
4. Take special precautions when close to bare conductors.
5. Measure that the installation is de-energized.
   - Use a multimeter with an impedance of at least 1 Mohm.
   - Make sure that the voltage between the drive input power terminals (L1, L2, L3) and the grounding terminal (PE) is close to 0 V.
   - Make sure that the voltage between the drive DC terminals (UDC+ and UDC-) and the grounding terminal (PE) is close to 0 V.
6. Install temporary grounding as required by the local regulations.
7. Ask for a permit to work from the person in control of the electrical installation work.

Additional instructions and notes

WARNING! Obey these instructions. If you ignore them, injury or death, or damage to the equipment can occur.

- If you install the drive on an IT system (an ungrounded power system or a high-resistance-grounded [over 30 ohms] power system), disconnect the ground-to-phase varistor; otherwise the varistor circuit can be damaged. See page *76*.
- If you install the drive on an IT system (an ungrounded power system or a high-resistance-grounded [over 30 ohms] power system), disconnect the internal EMC filter; otherwise the system will be connected to ground potential through the EMC filter capacitors. This can cause danger or damage the drive. See page *75*.
  Note: Disconnecting the internal EMC filter increases the conducted emission and reduces the drive EMC compatibility considerably. See section *EMC compatibility and motor cable length* on page *167*.
- If you install the drive on a corner-grounded TN system, disconnect the internal EMC filter; otherwise the system will be connected to ground potential through the EMC filter capacitors. This will damage the drive. See page *77*.
  Note: Disconnecting the internal EMC filter increases the conducted emission and reduces the drive EMC compatibility considerably. See section *EMC compatibility and motor cable length* on page *167*.
- Use all ELV (extra low voltage) circuits connected to the drive only within a zone of equipotential bonding, that is, within a zone where all simultaneously accessible conductive parts are electrically connected to prevent hazardous voltages appearing between them. You can accomplish this by a proper factory grounding, that is, make sure that all simultaneously accessible conductive parts are grounded to the protective earth (PE) bus of the building.
- Do not do insulation or voltage withstand tests on the drive or drive modules.

Note:

- The motor cable terminals of the drive are at a dangerous voltage when the input power is on, regardless of whether the motor is running or not.
- The DC and brake resistor terminals (UDC+, UDC-, R+ and R-) are at a dangerous voltage.
- External wiring can supply dangerous voltages to the terminals of relay outputs (RO1, RO2 and RO3).
- The Safe torque off function does not remove the voltage from the main and auxiliary circuits. The function is not effective against deliberate sabotage or misuse.

WARNING! Use a grounding wrist band when you handle the printed circuit boards. Do not touch the boards unnecessarily. The boards contain components sensitive to electrostatic discharge.

Grounding

These instructions are for all personnel who are responsible for the electrical installation, including the grounding of the drive.

WARNING! Obey these instructions. If you ignore them, injury or death, or equipment malfunction can occur, and electromagnetic interference can increase.

- If you are not a qualified electrician, do not do grounding work.
- Always ground the drive, the motor and adjoining equipment to the protective earth (PE) bus of the power supply. This is necessary for the personnel safety. Proper grounding also reduces electromagnetic emission and interference.
- In a multiple-drive installation, connect each drive separately to the protective earth (PE) bus of the power supply.
- Make sure that the conductivity of the protective earth (PE) conductors is sufficient. See section *Selecting the power cables* on page *60*. Obey the local regulations.
- Connect the power cable shields to the protective earth (PE) terminals of the drive.
- Make a 360° grounding of the power and control cable shields at the cable entries to suppress electromagnetic disturbances.

Note:

- You can use power cable shields as grounding conductors only when their conductivity is sufficient.
- Standard IEC/EN 61800-5-1 (section 4.3.5.5.2.) requires that as the normal touch current of the drive is higher than 3.5 mA AC or 10 mA DC, you must use a fixed protective earth (PE) connection. In addition,
  - install a second protective earth conductor of the same cross-sectional area as the original protective earthing conductor,

  or
  - install a protective earth conductor with a cross-section of at least 10 mm^2 Cu or 16 mm^2 Al,

  or
  - install a device which automatically disconnects the supply if the protective earth conductor breaks.

Additional instructions for permanent magnet motor drives

Safety in installation, start-up and maintenance

These are additional warnings concerning permanent magnet motor drives. The other safety instructions in this chapter are also valid.

WARNING! Obey these instructions. If you ignore them, injury or death and damage to the equipment can occur.

- Do not work on a drive when a rotating permanent magnet motor is connected to it. A rotating permanent magnet motor energizes the drive including its input power terminals.

Before installation, start-up and maintenance work on the drive:

- Stop the motor.
- Disconnect the motor from the drive with a safety switch or by other means.
- If you cannot disconnect the motor, make sure that the motor cannot rotate during work. Make sure that no other system, like hydraulic crawling drives, can rotate the motor directly or through any mechanical connection like felt, nip, rope, etc.
- Measure that the installation is de-energized.
  - Use a multimeter with an impedance of at least 1 Mohm.
  - Make sure that the voltage between the drive output terminals (T1/U, T2/V, T3/W) and the grounding (PE) busbar is close to 0 V.
  - Make sure that the voltage between the drive input power terminals (L1, L2, L3) and the grounding (PE) busbar is close to 0 V.
  - Make sure that the voltage between the drive DC terminals (UDC+, UDC-) and the grounding (PE) terminal is close to 0 V.
- Install temporary grounding to the drive output terminals (T1/U, T2/V, T3/W). Connect the output terminals together as well as to the PE.

Start-up and operation:

- Make sure that the operator cannot run the motor over the rated speed. Motor overspeed causes overvoltage that can damage or destroy the capacitors in the intermediate circuit of the drive.

General safety in operation

These instructions are for all personnel that operate the drive.

WARNING! Obey these instructions. If you ignore them, injury or death, or damage to the equipment can occur.

- Do not control the motor with the disconnector at the drive power supply; instead, use the control panel start and stop keys or commands through the I/O terminals of the drive.
- Give a stop command to the drive before you reset a fault. If you have an external source for the start command and the start is on, the drive will start immediately after the fault reset, unless you configure the drive for pulse start. See the firmware manual.
- Before you activate automatic fault reset functions of the drive control program, make sure that no dangerous situations can occur. These functions reset the drive automatically and continue operation after a fault.

Note: When the drive is not in the Hand mode, the Off key on the control panel will not stop the drive.

2

Introduction to the manual

Contents of this chapter

The chapter describes applicability, target audience and purpose of this manual. It describes the contents of this manual and refers to a list of related manuals for more information. The chapter also contains a flowchart of steps for checking the delivery, installing and commissioning the drive. The flowchart refers to chapters/sections in this manual.

Applicability

The manual applies to the ACH580-01 drives.

Target audience

The reader is expected to know the fundamentals of electricity, wiring, electrical components and electrical schematic symbols.

The manual is written for readers worldwide. Both SI and imperial units are shown. Special US instructions for installations in the United States are given.

Purpose of the manual

This manual provides information needed for planning the installation, installing, and servicing the drive.

Contents of this manual

The manual consists of the following chapters:

- *Safety instructions* (page *13*) gives safety instructions you must obey when installing, commissioning, operating and servicing the drive.
- *Introduction to the manual* (this chapter, page *21*) describes applicability, target audience, purpose and contents of this manual. It also contains a quick installation and commissioning flowchart. At the end, it lists terms and abbreviations.
- *Operation principle and hardware description* (page *27*) describes the operation principle, layout, power connections and control interfaces, type designation label and type designation information in short.
- *Mechanical installation* (page *39*) describes how to check the installation site, unpack, check the delivery and install the drive mechanically.
- *Planning the electrical installation* (page *59*) describes how to plan the electrical installation of the drive, for example, how to check the compatibility of the motor and the drive and select cables, protections and cable routing.
- *Electrical installation* (page *73*) describes how to check the insulation of the assembly and the compatibility with IT (ungrounded) and corner-grounded TN systems. It then shows how to connect the power and control cables, install optional modules and connect a PC.
- *Installation checklist* (page *125*) contains a checklist for checking the mechanical and electrical installation of the drive before start-up.
- *Maintenance and hardware diagnostics* (page *127*) contains preventive maintenance instructions and LED indicator descriptions.
- *Technical data* (page *143*) contains technical specifications of the drive, eg ratings, sizes and technical requirements as well as provisions for fulfilling the requirements for CE and other marks.
- *Dimension drawings* (page *185*) shows dimension drawings of the drive.
- *Resistor braking* (page *207*) tells how to select the brake resistor.
- *Safe torque off function* (page *215*) describes STO features, installation and technical data.
- *Optional I/O extension modules* (page *227*) describes CMOD-01 and CMOD-02 multifunction extension modules, their installation, start-up, diagnostics and technical data.
- *Further information* (inside of the back cover, page *251*) tells how to make product and service inquiries, get information on product training, provide feedback on manuals and find documents on the Internet.

Related documents

See *List of related manuals* on page *2* (inside of the front cover).

Categorization by frame (size)

The ACH580-01 is manufactured in frames (frame sizes) R0…R9. Some instructions and other information which only concern certain frames are marked with the symbol of the frame (R0…R9). The frame is marked on the type designation label attached to the drive, see section *Type designation label* on page *35*.

Quick installation and commissioning flowchart

Task	See
Identify the frame of your drive: R0…R9.	*Operation principle and hardware description*: *Type designation key* on page *37*
Plan the installation: select the cables, etc. Check the ambient conditions, ratings and required cooling air flow.	*Planning the electrical installation* on page *59* *Technical data* on page *143*
Unpack and check the drive.	*Mechanical installation: Unpacking and examining delivery, frames R0…R4* on page *43*, *Unpacking and examining delivery, frame R5* on page *44*, *Unpacking and examining delivery, frames R6…R9* on page *46*
If the drive will be connected to an IT (ungrounded) system, check that the internal EMC filter and ground-to-phase varistor are not connected. If the drive will be connected to a corner-grounded TN system, check that the internal EMC filter is not connected.	*Operation principle and hardware description*: *Type designation key* on page *37* *Electrical installation*: *Checking the compatibility with IT (ungrounded) and corner-grounded TN systems* on page *75*
Install the drive on a wall.	*Mechanical installation* on page *39*
Route the cables.	*Planning the electrical installation*: *Routing the cables* on page *66*
Check the insulation of the input cable and the motor and the motor cable.	*Electrical installation*: *Checking the insulation of the assembly* on page *74*
Connect the power cables.	*Electrical installation*: *Connecting the power cables* on page *80*
Connect the control cables.	*Electrical installation*: *Connecting the control cables* on page *101*
Check the installation.	*Installation checklist* on page *125*
Commission the drive.	*ACH580 HVAC control program firmware manual* (3AXD50000027537 [English])

Terms and abbreviations

Term/abbreviation	Explanation
ACH-AP-H	Control panel with Hand-Off-Auto functionality
ACS-AP-x	Assistant control panel, advanced operator keypad for communication with the drive. The dedicated assistant control panel for the ACH580 is ACH-AP-H (Hand-Off-Auto panel). The ACH580 offers limited support of ACS-AP-I and ACS-AP-W. The Start, Stop, Loc/Rem buttons on these panels act as Hand, Auto and Off buttons, respectively, when used with the ACH580. You can use parameters and Primary settings menus with ACS-AP-I and parameters and I/O with ACS-AP-W.
BACnet™	BACnet™ is a registered trademark of American Society of Heating, Refrigerating and Air-Conditioning Engineers (ASHRAE).
Brake chopper	Conducts the surplus energy from the intermediate circuit of the drive to the brake resistor when necessary. The chopper operates when the DC link voltage exceeds a certain maximum limit. The voltage rise is typically caused by deceleration (braking) of a high inertia motor.
Brake resistor	Dissipates the drive surplus braking energy conducted by the brake chopper to heat. Essential part of the brake circuit. See *Brake chopper*.
Control board	Circuit board in which the control program runs.
Capacitor bank	See *DC link capacitors*.
CDPI-01	Communication adapter module
CCA-01	Configuration adapter
CHDI-01	Optional 115/230 V digital input extension module
CMOD-01	Optional multifunction extension module (external 24 V AC/DC and digital I/O extension)
CMOD-02	Optional multifunction extension module (external 24 V AC/DC and isolated PTC interface)
CPTC-02	Optional multifunction extension module (external 24 V and ATEX certified PTC interface)
DC link	DC circuit between rectifier and inverter
DC link capacitors	Energy storage which stabilizes the intermediate circuit DC voltage
DPMP-01	Mounting platform for ACS-AP control panel (flange mounting)
DPMP-02	Mounting platform for ACS-AP control panel (surface mounting)
Drive	Frequency converter for controlling AC motors
EMC	Electromagnetic compatibility
EFB	Embedded fieldbus
FBA	Fieldbus adapter
FBIP-21	Optional BACnet/IP adapter module
FCAN-01	Optional CANopen adapter module
FCNA-01	ControlNet adapter module

Term/abbreviation	Explanation
FDNA-01	Optional DeviceNet adapter module
FECA-01	Optional EtherCAT adapter module
FENA-11/-21	Optional Ethernet adapter module for EtherNet/IP, Modbus TCP and PROFINET IO protocols
FEPL-02	Optional Ethernet POWERLINK adapter module
FLON-01	LONWORKS® adapter module
FPBA-01	Optional PROFIBUS DP adapter module
Frame (size)	Refers to drive physical size, for example R0 and R1. The type designation label attached to the drive shows the frame of the drive, see section *Type designation key* on page *37*.
FSCA-01	Optional EIA-485 adapter module
I/O	Input/Output
IGBT	Insulated gate bipolar transistor
Intermediate circuit	See *DC link*.
Inverter	Converts direct current and voltage to alternating current and voltage.
LONWORKS®	LONWORKS® (local operating network) is a networking platform specifically created to address the needs of control applications.
NETA-21	Remote monitoring tool
Network control	With fieldbus protocols based on the Common Industrial Protocol (CIP™), such as DeviceNet and Ethernet/IP, denotes the control of the drive using the Net Ctrl and Net Ref objects of the ODVA AC/DC Drive Profile. For more information, see www.odva.org, and the following manuals: • *FDNA-01 DeviceNet adapter module user's manual* (3AFE68573360 [English]), and • *FENA-01/-11/-21 Ethernet adapter module user's manual* (3AUA0000093568 [English]).
Parameter	User-adjustable operation instruction to the drive, or signal measured or calculated by the drive
PLC	Programmable logic controller
PROFIBUS, PROFIBUS DP, PROFINET IO	Registered trademarks of PI - PROFIBUS & PROFINET International
PTC	Positive temperature coefficient (PTC) refers to materials that experience an increase in electrical resistance when their temperature is raised.
R0, R1, …	*Frame (size)*
Rectifier	Converts alternating current and voltage to direct current and voltage.
SIL	Safety integrity level. See chapter *Safe torque off function* on page *215*.
STO	Safe torque off. See chapter *Safe torque off function* on page *215*.

3

Operation principle and hardware description

Contents of this chapter

This chapter briefly describes the operation principle, layout, type designation label and type designation information. It also shows a general diagram of power connections and control interfaces.

Operation principle

The ACH580-01 is a drive for controlling asynchronous AC induction motors, permanent magnet motors and synchronous reluctance motors (SynRM).

The figure below shows the simplified main circuit diagram of the drive.

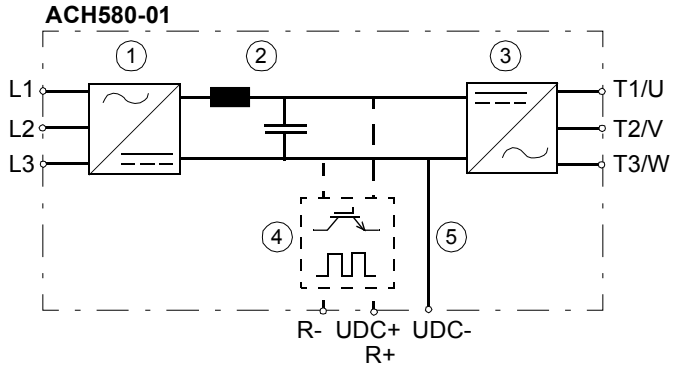

1	Rectifier. Converts alternating current and voltage to direct current and voltage.
2	DC link. DC circuit between rectifier and inverter.
3	Inverter. Converts direct current and voltage to alternating current and voltage.
4	Built-in brake chopper (R-, R+) in frames R0…R3. Conducts the surplus energy from the intermediate DC circuit of the drive to the brake resistor when necessary. The chopper operates when the DC link voltage exceeds a certain maximum limit. The voltage rise is typically caused by deceleration (braking) of a high inertia motor. The user obtains and installs the brake resistor when needed.
5	DC connection (UDC+, UDC-), for an external brake chopper in frames R4…R9.

Layout

Frames R0…R5

The layout of a frame R0 drive is presented below. The constructions of frames R1…R5 differ to some extent.

R0

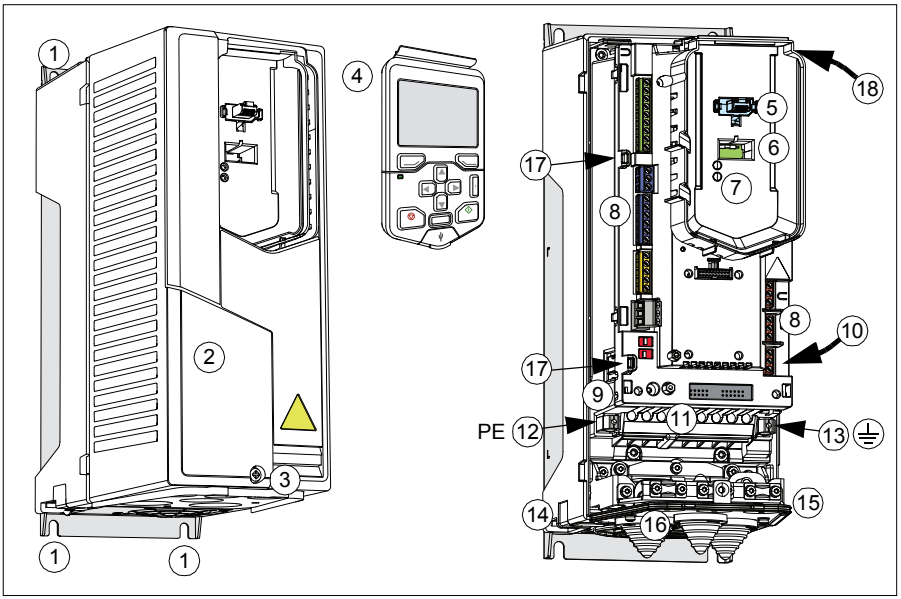

1	Mounting points (4 pieces)
2	Cover
3	Cover screw
4	Control panel
5	Control panel connection
6	Cold configuration connection for CCA-01
7	Power OK and Fault LEDs. See section *LEDs* on page *141*.
8	I/O connections. See section *External control connection terminals, frames R0…R5* on page *32*.
9	Varistor grounding switch (VAR)

10	EMC filter grounding switch (EMC). R0…R2: On the right side of the drive. R3: On the front, near the I/O connections. See *Checking the compatibility with IT (ungrounded) and corner-grounded TN systems* on page *75*.
11	Input power connection (L1, L2, L3), motor connection (T1/U, T2/V, T3/W) and brake connection (R-, R+)
12	PE connection (power line)
13	Grounding connection (motor)
14	Additional grounding connection
15	Lead-through plate
16	Main cooling fan
17	Cable tie mounts for I/O cables
18	Auxiliary cooling fan connector

Frames R6…R9

The layout of a frame R6 drive is presented below. The constructions of frames R7…R9 differ to some extent.

R6

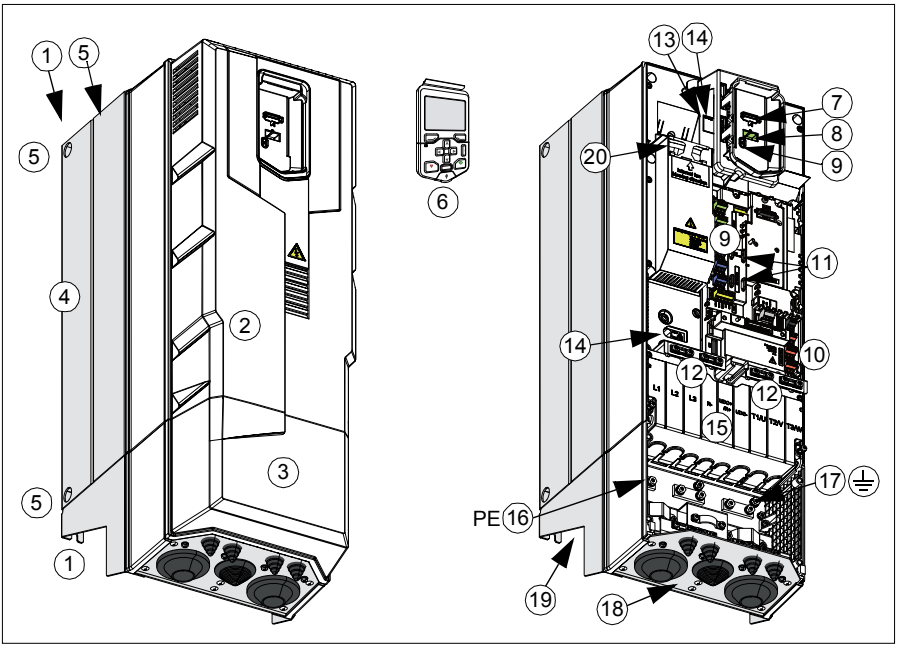

1	Mounting points (2 at the top, 2 at the bottom of the main part of the frame, 2 at the top of the cable box)
2	Cover
3	Cable box
4	Heatsink
5	Lifting holes (6 pieces)
6	Control panel
7	Control panel connection
8	Cold configuration connection for CCA-01
9	Power OK and Fault LEDs. See section *LEDs* on page *141*.
10	I/O connections. See section *External control connection terminals, frames R6…R9* on page *33*.
11	Cable tie mounts for I/O cables
12	Clamps for I/O cable mechanical support

13	Varistor grounding screw (VAR), under the control panel platform
14	Two EMC filter grounding screws (EMC), one under the control panel platform and one at the left, above the shroud. See *Checking the compatibility with IT (ungrounded) and corner-grounded TN systems* on page *75*.
15	Shroud. Under the shroud: Input power connection (L1, L2, L3), motor connection (T1/U, T2/V, T3/W) and DC connection (UDC+, UDC-).
16	PE connection (power line)
17	Grounding connection (motor)
18	Lead-through plate
19	Main cooling fan
20	Auxiliary cooling fan

Overview of power and control connections

The logical diagram below shows the power connections and control interfaces of the drive.

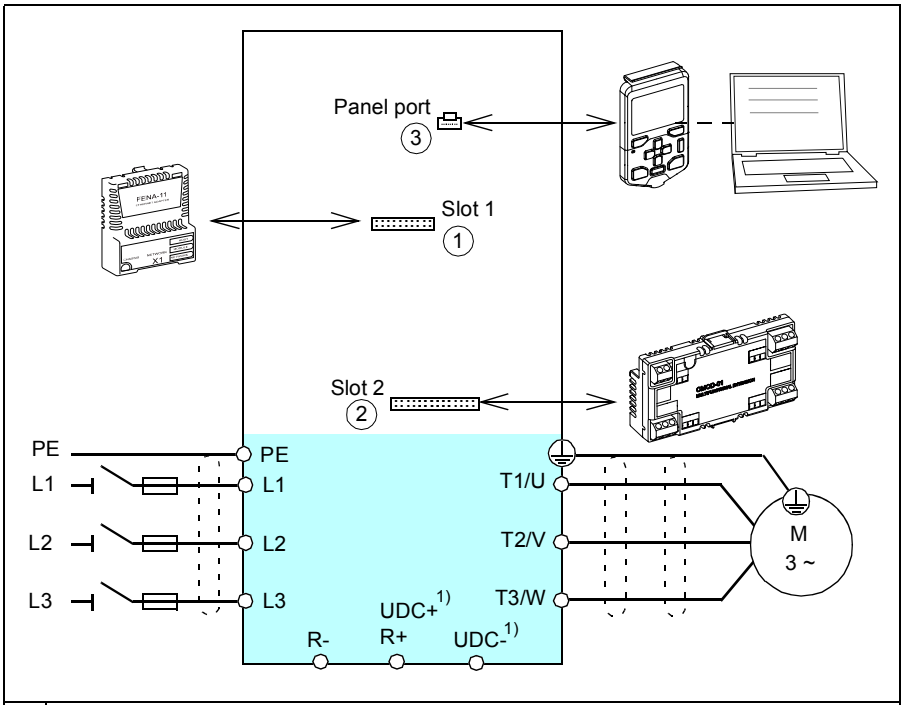

1	Option slot 1 for optional fieldbus adapter modules
2	Option slot 2 for optional I/O extension modules
3	Panel port.

1) Not in all frame sizes.

External control connection terminals, frames R0…R5

The layout of the external control connection terminals of the R0 frame is shown below. Layout of the external control connection terminals is identical in frames R0…R5 but the location of the control board with the terminals is different in frames R3…R5.

R0

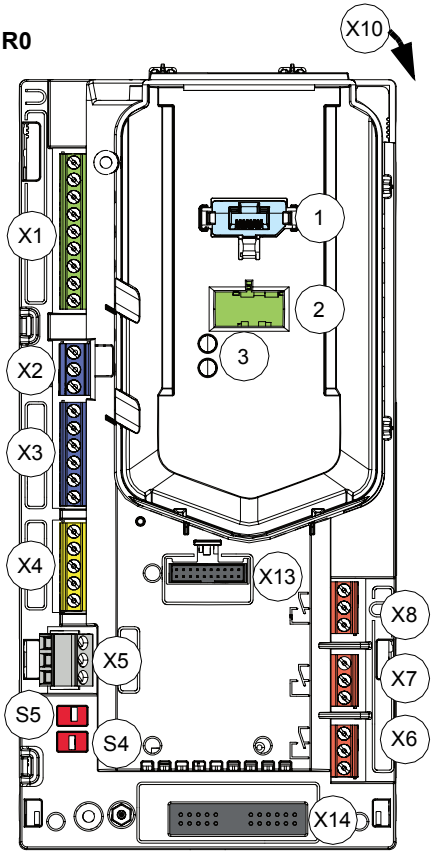

	Description
X1	Analog inputs and outputs
X2	Aux. voltage output
X3	Programmable digital inputs
X4	Safe torque off connection
X5	Embedded fieldbus
X6	Relay output 3
X7	Relay output 2
X8	Relay output 1
X10	Auxiliary fan connection (IP55)
X13	Option slot 1 (fieldbus adapter modules)
X14	Option slot 2 (I/O extension modules)
S4, S5	Termination switch (S4), bias resistor switch (S5), see section *Switches* on page *105*
1	Panel port (control panel connection)
2	Cold configuration connection. This connector is used with the CCA-01 configuration adapter.
3	Power OK and Fault LEDs. See section *LEDs* on page *141*.

External control connection terminals, frames R6…R9

The layout of the external control connection terminals of frames R6…R9 is shown below.

R6…R9

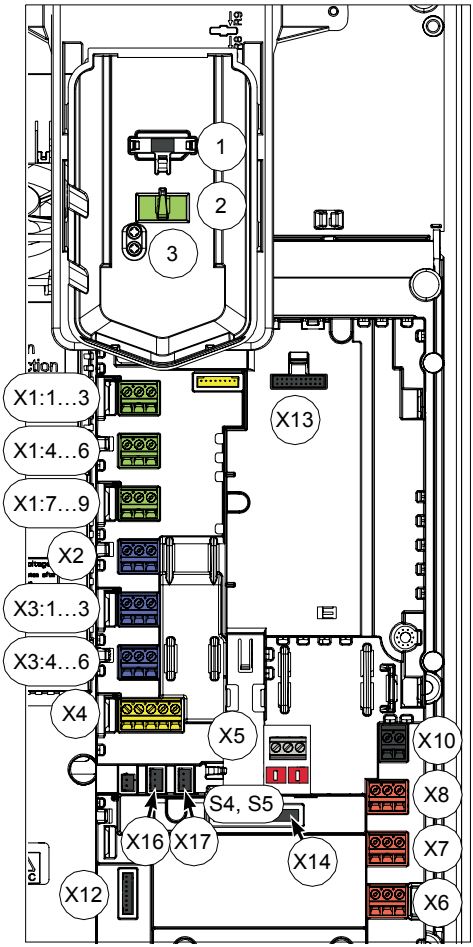

	Description
X1	Analog inputs and outputs
X2	Aux. voltage output
X3	Digital inputs
X4	Safe torque off connection
X5	Connection to embedded EIA-485 fieldbus adapter module (installed in option slot 3)
X6	Relay output 3
X7	Relay output 2
X8	Relay output 1
X10	External +24 V AC/DC input connection
X12	Panel connection
X13	Option slot 1 (fieldbus adapter modules)
X14	Option slot 2 (I/O extension modules)
X16	Auxiliary fan 1 connection
X17	Auxiliary fan 2 connection
S4, S5	Termination switch (S4), bias resistor switch (S5), see section *Switches* on page *105*
1	Panel port (control panel connection)
2	Cold configuration connection. This connector is used with the CCA-01 configuration adapter.
3	Power OK and Fault LEDs. See section *LEDs* on page *141*.

WARNING! Do not connect the +24 V AC cable to the control board ground when the control board is powered using an external 24 V AC supply.

Control panel

To remove the control panel, press the retaining clip at the top (1a) and pull it forward from the top edge (1b).

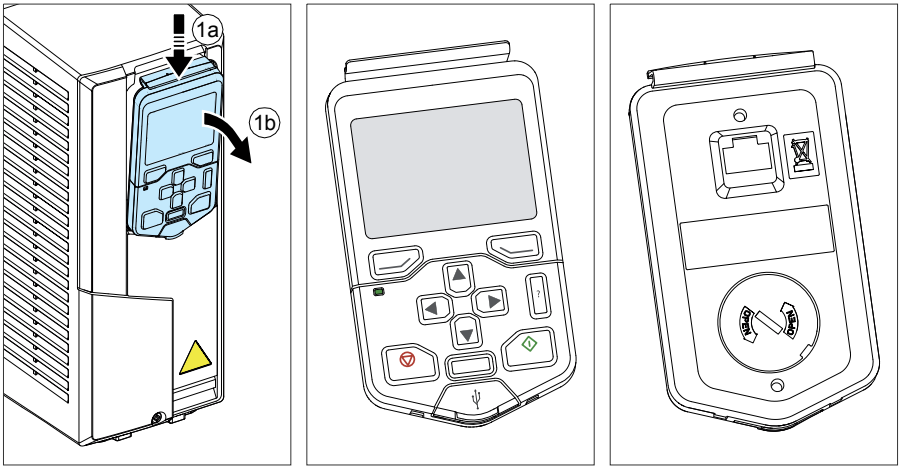

To reinstall the control panel, put the bottom of the container in position (1a), press the retaining clip at the top (1b) and push the control panel in at the top edge (1c).

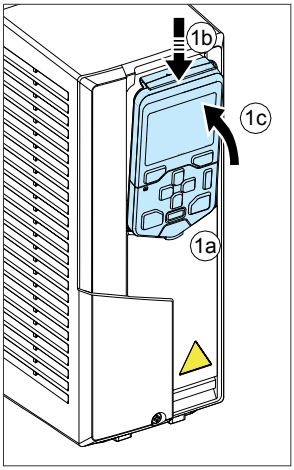

For the use of the control panel, see *ACH580 HVAC control program firmware manual* (3AXD50000027537 [English]) and *ACS-AP-X assistant control panels user's manual* (3AUA0000085685 [English]).

Type designation label

The type designation label includes IEC and NEMA ratings, appropriate markings and the type designation and serial number, which allow identification of each drive. The type designation label is located on the left side of the drive, see section *Locations of the labels on the drive*. An example label is shown below.

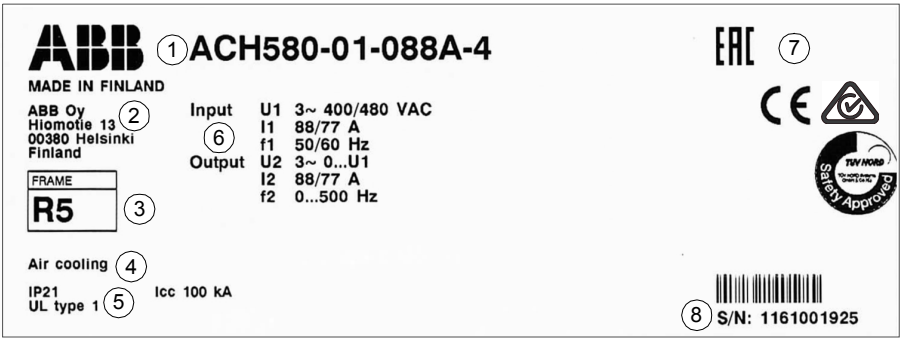

No.	Description
1	Type designation, see section *Type designation key* on page *37*.
2	Name and address of the manufacturer
3	Frame (size)
4	Type of the drive, for example, with Air cooling or Liquid cooling, and so on.
5	Degree of protection
6	Nominal ratings in the supply voltage range, see section *Ratings* on page *144*, section *Electrical power network specification* on page *166* and section *Motor connection data* on page *166*. Input voltage range 3~ 380…480V AC. This is indicated in the type designation label as typical input voltage levels (U_1) (3~ 400/480V AC). See page *166* for further information.
7	Valid markings
8	S/N: Serial number of format MYYWWXXXX, where M: Manufacturer YY: 16, 17, 18, … for 2016, 2017, 2018, … WW: 01, 02, 03, … for week 1, week 2, week 3, … XXXXX: Integer starting every week from 0001

Locations of the labels on the drive

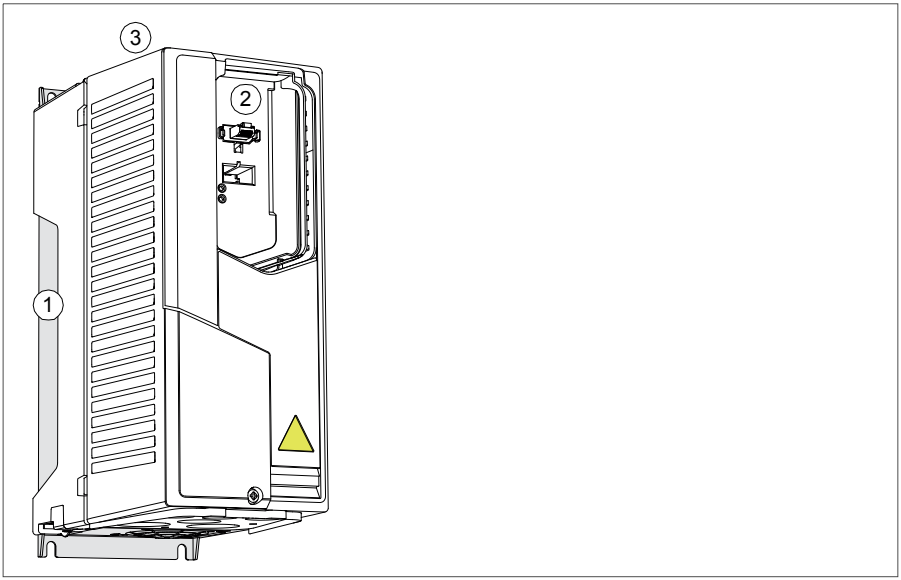

1	ABB MADE IN FINLAND ABB Oy Hiomotie 13 00380 Helsinki Finland FRAME R5 Air cooling IP21 UL type 1 Icc 100 kA ACH580-01-088A-4 Input U1 3~ 400/480 VAC I1 88/77 A f1 50/60 Hz Output U2 3~ 0...U1 I2 88/77 A f2 0...500 Hz EAC CE TÜV NORD Safety Approved S/N: 1161001925
2	ACH580-01-088A-4 S/N: 1161001925 SW v1.70
3	U1 3~ 400/480 VAC I2 88/77 A Pn 45 kW/60 hp ACH580-01-088A-4 S/N: 1161001925

Type designation key

The type designation contains information on the specifications and configuration of the drive. You find the type designation on the type designation label attached to the drive. The first digits from the left express the basic configuration, for example, ACH580-01-12A6-4. The optional selections are given after that, separated by plus signs, for example, +L501. The main selections are described below. Not all selections are available for all types.

ACH580-01-206A-4+B056+J400+...

① ② ③ ④

	CODE	DESCRIPTION
	Basic codes	
①	ACH580	Product series
	01	When no options are selected: Wall mounted, IP21 (UL Type 1), control panel with a USB port, choke, EMC C2 filter (internal EMC filter), safe torque off, coated boards, cable lead through entry from the bottom, cable box or the conduit plate with cable entries, quick installation and start-up guide (multilingual).
②	**Size**	
	xxxx	Refer to the rating table, page *144*
③	**Voltage rating**	
	4	400/480 V (380…480 V). See page *166* for further information.
④	**Option codes (plus codes)**	
	Control panel and panel options	
	J400	ACH-AP-H Control panel (as standard)
	J424	CDUM-01 Blank control panel cover (no control panel)
	I/O (one slot available for I/O options)	
	L501	CMOD-01 External 24 V AC/DC and digital I/O extension (2×RO and 1×DO)
	L523	CMOD-02 External 24 V AC/DC and isolated PTC interface
	L512	CHDI-01 115/230 V Digital input extension (6×DI and 2×RO)
	L537	ATEX certified PTC interface and external 24 V. Requires option Q971.
	Safety	
	Q971	ATEX certified safe disconnection function, EX II (2) GD. Sold only with option L357.
	Fieldbus adapters	
	K465	FBIP-21 BACnet/IP (2-port)

	CODE	DESCRIPTION
	K452	FLON-01 LONWORKS®
	K454	FPBA-01 PROFIBUS DP
	K457	FCAN-01 CANopen
	K451	FDNA-01 DeviceNet™
	K473	FENA-11 Ethernet (EtherNet/IP™, Modbus/TCP, PROFINET)
	K469	FECA-01 EtherCAT
	K458	FSCA-01 Modbus/RTU
	K470	FEPL-02 Ethernet POWERLINK
	K462	FCNA-01 ControlNet™
	K475	FENA-21 2-port Ethernet (EtherNet/IP™, Modbus/TCP, PROFINET)
	Embedded fieldbus	
		Embedded fieldbus, EIA-485 as standard
	Construction	
	B056	IP55 (UL type 12). Factory option, retro-fit not possible.
	C135	Flange mounting kit
	H358	Cable conduit plate, blank.
	Full set of printed manuals in selected language. Note: The delivered manual set may include manuals in English if the translation is not available.	
	R700	English
	R701	German
	R702	Italian
	R703	Dutch
	R704	Danish
	R705	Swedish
	R706	Finnish
	R707	French
	R708	Spanish
	R709	Portuguese (Portugal)
	R711	Russian
	R712	Chinese
	R714	Turkish

3AXD10000324814

4

Mechanical installation

Contents of this chapter

The chapter tells how to check the installation site, unpack, check the delivery and install the drive mechanically.

Safety

WARNING! Frames R5…R9: Lift the drive with a lifting device. Use the lifting eyes of the drive. Do not tilt the drive. **The drive is heavy and its center of gravity is high. An overturning drive can cause physical injury.**

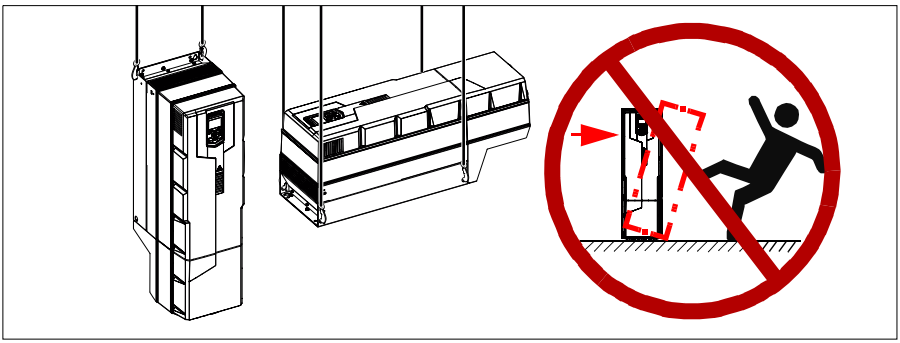

Checking the installation site

The drive must be installed on the wall. There are three alternative ways to install it:

- vertically alone. Do not install the drive upside down.

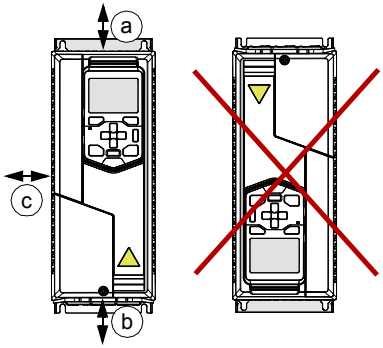

Frame size	Vertical installation - Free space					
	Above (a)		Below (b)[1]		Beside	
	mm	in	mm	in	mm	in
R0	30	1.2	200	7.9	150	5.9
R1	30	1.2	200	7.9	150	5.9
R2	30	1.2	200	7.9	150	5.9
R3	53	2.1	200	7.9	150	5.9
R4	53	2.1	200	7.9	150	5.9
R5	100	3.9	200	7.9	150	5.9
R6	155	6.1	300	11.8	150	5.9
R7	155	6.1	300	11.8	150	5.9
R8	155	6.1	300	11.8	150	5.9
R9	200	7.9	300	11.8	150	5.9

3AXD00000586715.xls H

[1] Free space below is measured from the frame, not from the cable box used in frames R5…R9.

- vertically side by side

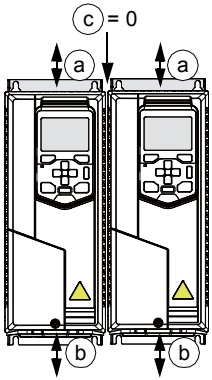

Frame size	Vertical installation side by side - Free space					
	Above (a)		Below (b)[1]		Between (c)	
	mm	in	mm	in	mm	in
R0	200	7.9	200	7.9	0	0
R1	200	7.9	200	7.9	0	0
R2	200	7.9	200	7.9	0	0
R3	200	7.9	200	7.9	0	0
R4	200	7.9	200	7.9	0	0
R5	200	7.9	200	11.8	0	0
R6	200	7.9	300	11.8	0	0
R7	200	7.9	300	11.8	0	0
R8	200	7.9	300	11.8	0	0
R9	200	7.9	300	11.8	0	0

3AXD00000586715.xls H

[1] Free space below is measured from the frame, not from the cable box used in frames R5…R9.

- horizontally alone, IP21 (UL Type 1) only

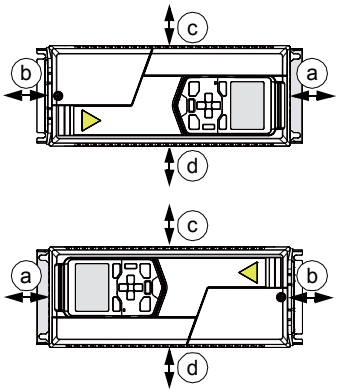

Frame size	Horizontal installation - Free space					
	Above (a)		Below (b)		Side up (c)	
	mm	in	mm	in	mm	in
R0	30	1.2	200	7.9	30	1.2
R1	30	1.2	200	7.9	30	1.2
R2	30	1.2	200	7.9	30	1.2
R3	30	1.2	200	7.9	30	1.2

Frame size	Side down (d)	
	mm	in
	200	7.9
R1	200	7.9
R2	200	7.9
R3	200	7.9

3AXD00000586715.xls H

Check the installation site according to the requirements below:

- The installation site is sufficiently ventilated or cooled to transfer away the drive losses. See section *Losses, cooling data and noise* on page *159*.
- The operation conditions of the drive meet the specifications given in section *Ambient conditions* on page *175*.
- The wall is as close to vertical as possible, of non-flammable material and strong enough to carry the weight of the drive, see section *Dimensions, weights and free space requirements* on page *156*.
- The floor/material below the installation is non-flammable.
- There is enough free space above and below the drive to enable cooling air flow, service and maintenance, See the required free space tables for each of the different mounting alignments on page *40* (or page *156*).

Required tools

To install the drive mechanically, you need the following tools:

- drill with suitable bits
- screwdriver and/or wrench with a set of suitable bits (as appropriate for the installation hardware used)
- tape measure, if you will not be using the provided mounting template.

Moving the drive

Frames R5…R9: Move the transport package by pallet truck to the installation site.

Unpacking and examining delivery, frames R0…R4

The figure below shows the drive package with its contents. Examine that all items are present and there are no signs of damage. Read the data on the type designation label of the drive to make sure that the drive is of the correct type. See section *Type designation label* on page *35*.

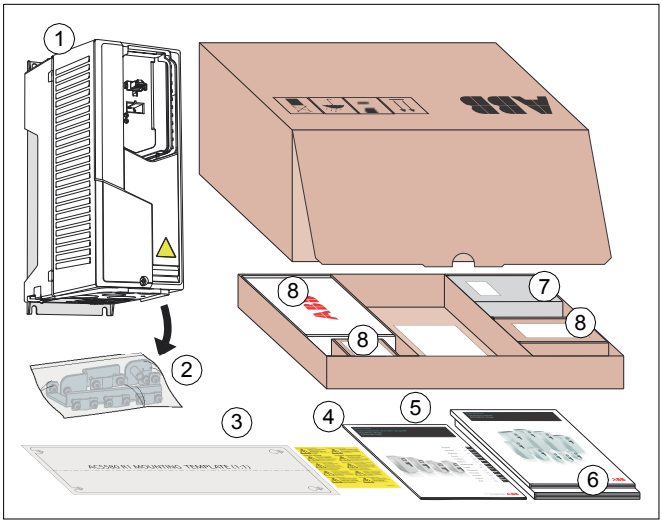

1	Drive (frame R1 shown)
2	Mounting accessories in plastic bag(s), under the drive cover
3	Mounting template
4	Multilingual residual voltage warning stickers
5	Multilingual quick installation and start-up guide

6	User's manual (if ordered with a plus code)
7	Control panel selected in the order (in a separate package)
8	Possible options in separate packages, if they have been ordered with a plus code,such as for example +K457 (FCAN-01 CANopen adapter module). US: Options are installed at the factory.
Note: Hood included with option +B056 (IP55/UL Type 12)	

Unpacking and examining delivery, frame R5

The figure below shows the layout of the transport package. Examine that all items are present and there are no signs of damage. Read the data on the type designation label of the drive to make sure that the drive is of the correct type. See section *Type designation label* on page *35*.

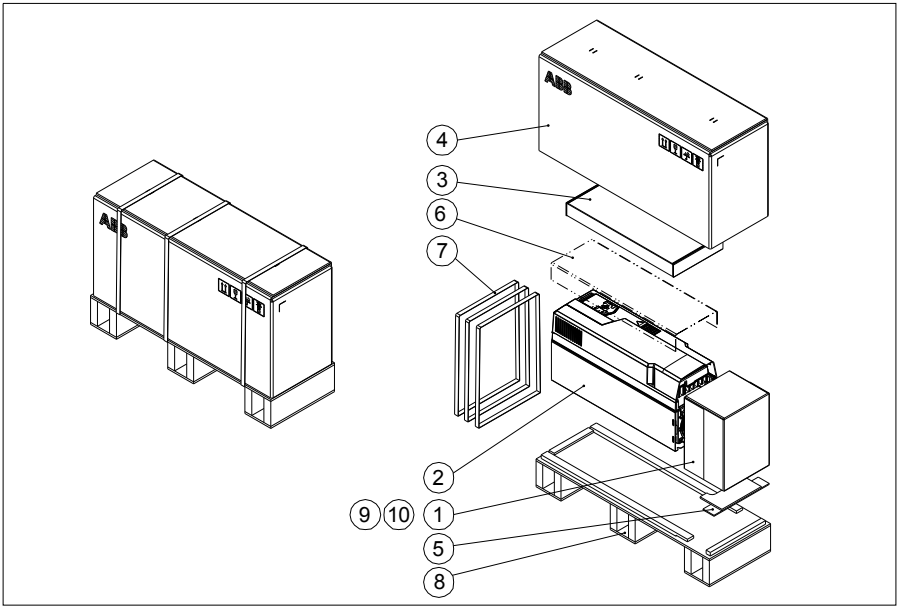

1	Cable box package. **Note:** The cable box is mounted to the IP55 drive module frame at the factory.
2	Drive
3	In the option box • Multilingual quick installation and start-up guide • User's manual (if ordered with a plus code) • Multilingual residual voltage warning stickers
4	Cardboard box. Mounting template in the cardboard box.

5	Stopper
6	Cover protecting film
7	Straps
8	Pallet
9	Control panel selected in the order (in a separate package) in the option box
10	Possible options in separate packages, if they have been ordered with a plus code, such as for example +K457 (FCAN-01 CANopen adapter module) in the option box. US: Options are installed at the factory.
Note: Hood included with option +B056 (IP55/UL Type 12)	

To unpack:

- Cut the straps (7).
- Remove the cardboard box (4) and option box (3).
- Remove the cover protecting film (6).
- Lift the drive.

Frame R5 cable box (IP21, UL Type 1)

This illustration shows the contents of the cable box package. The package also includes an assembly drawing which shows how to install the cable box to the drive module frame.

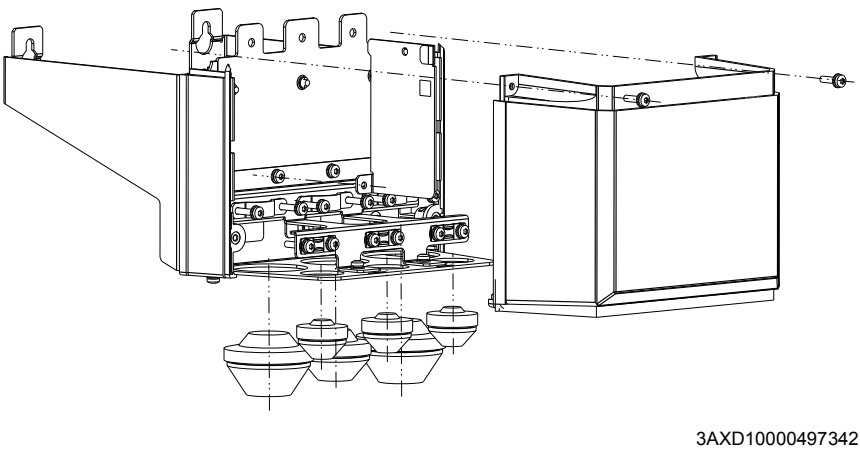

Unpacking and examining delivery, frames R6…R9

The figure below shows the layout of the transport package. Examine that all items are present and there are no signs of damage. Read the data on the type designation label of the drive to make sure that the drive is of the correct type. See section *Type designation label* on page *35*.

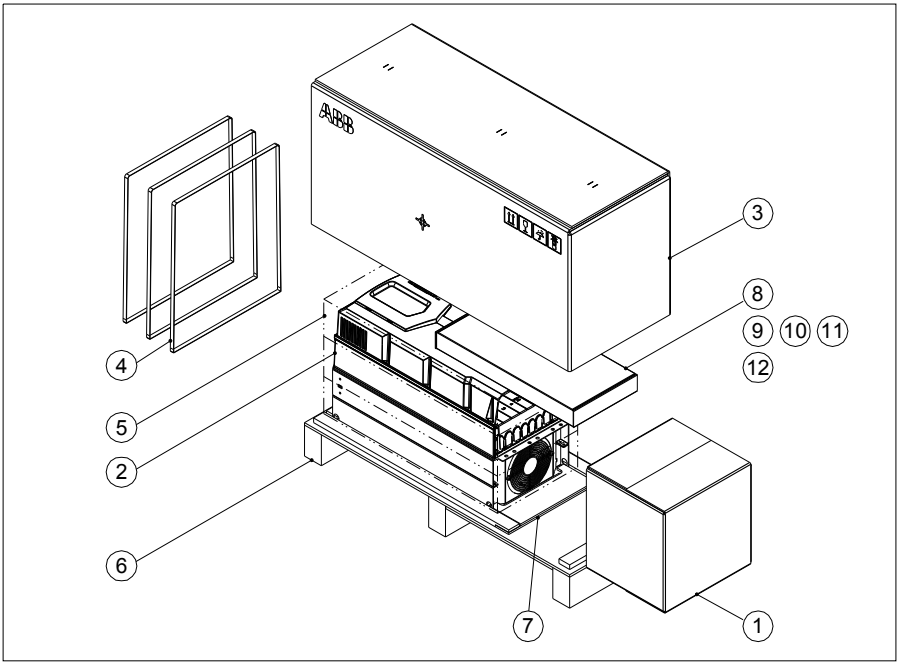

1	Cable box. Power and control cable grounding shelves in a plastic bag, assembly drawing. **Note**: The cable box is mounted to the IP55 drive module frame at the factory.
2	Drive with factory installed options.
3	Cardboard box
4	Straps
5	VCI bag for protecting against corrosion
6	Pallet
7	Stopper
8	Option tray

9	In the option tray • Multilingual quick installation and start-up guide • User's manual (if ordered with a plus code) • Multilingual residual voltage warning stickers
10	Control panel selected in the order (in a separate package) in the option tray
11	Possible options in separate packages, if they have been ordered with a plus code,such as for example +K457 (FCAN-01 CANopen adapter module) in the option tray. US: Options are installed at the factory.
12	Mounting template on top of the option tray
Note: Hood included with option +B056 (IP55/UL Type 12)	

To unpack:

- Cut the straps (4).
- Remove the cardboard box (3) and option tray (8).
- Remove the VCI bag (5).
- Attach lifting hooks to the lifting eyes of the drive (see the figure on page *39*). Lift the drive with a hoist.

Frame R6 cable box (IP21, UL Type 1)

The figure below shows the contents of the cable box package. The package also includes an assembly drawing which shows how to install the cable box to the drive frame.

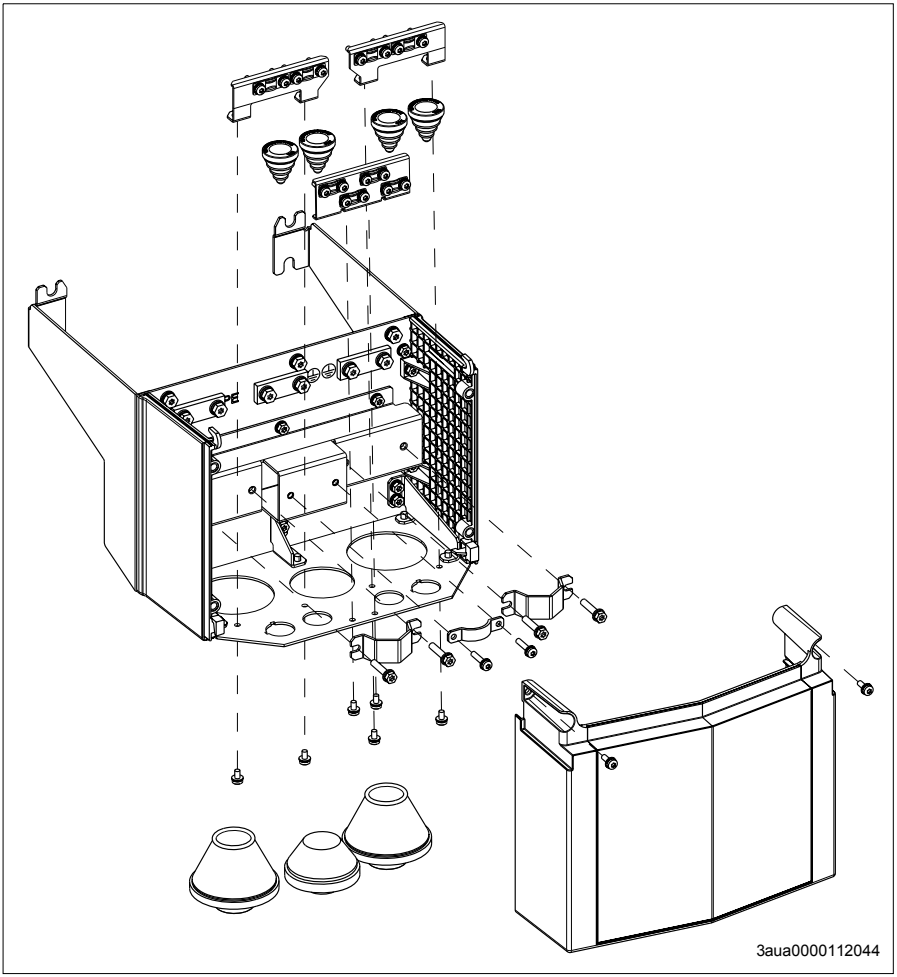

Frame R7 cable box (IP21, UL Type 1)

The figure below shows the contents of the cable box package. The package also includes an assembly drawing which shows how to install cable box to the drive frame.

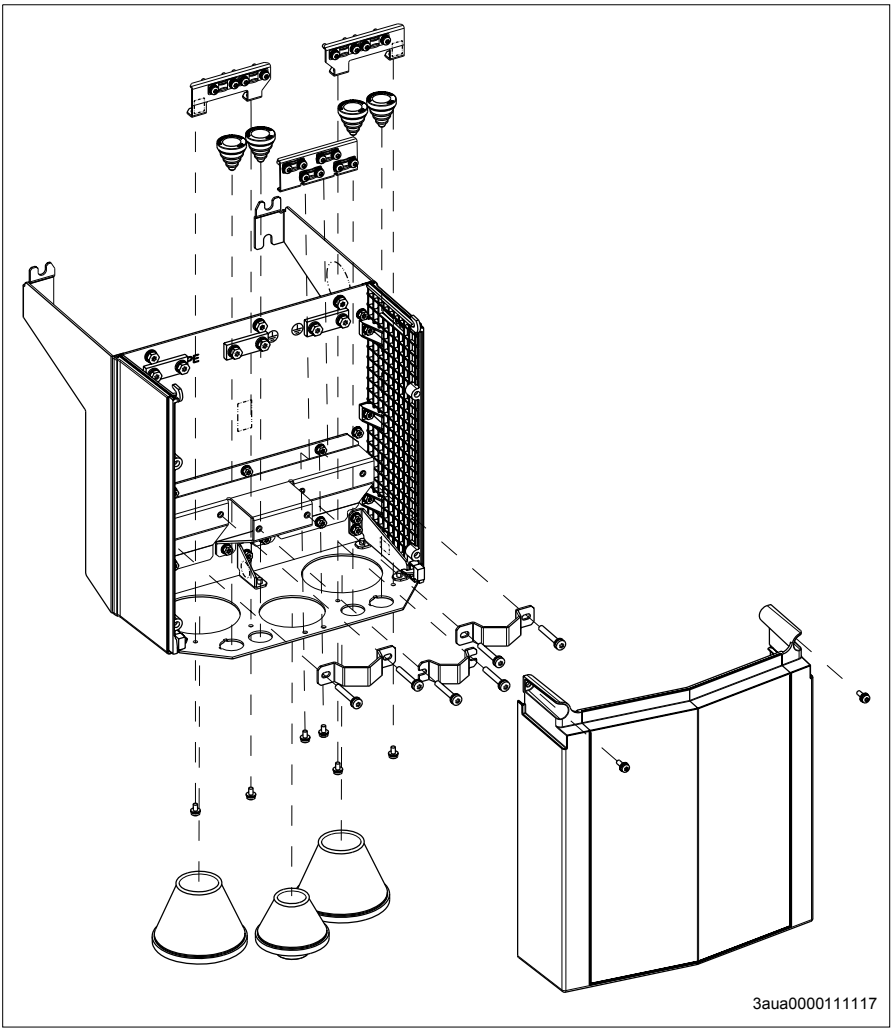

Frame R8 cable box (IP21, UL Type 1)

The figure below shows the contents of the cable box package. The package also includes an assembly drawing which shows how to install the cable box to the drive frame.

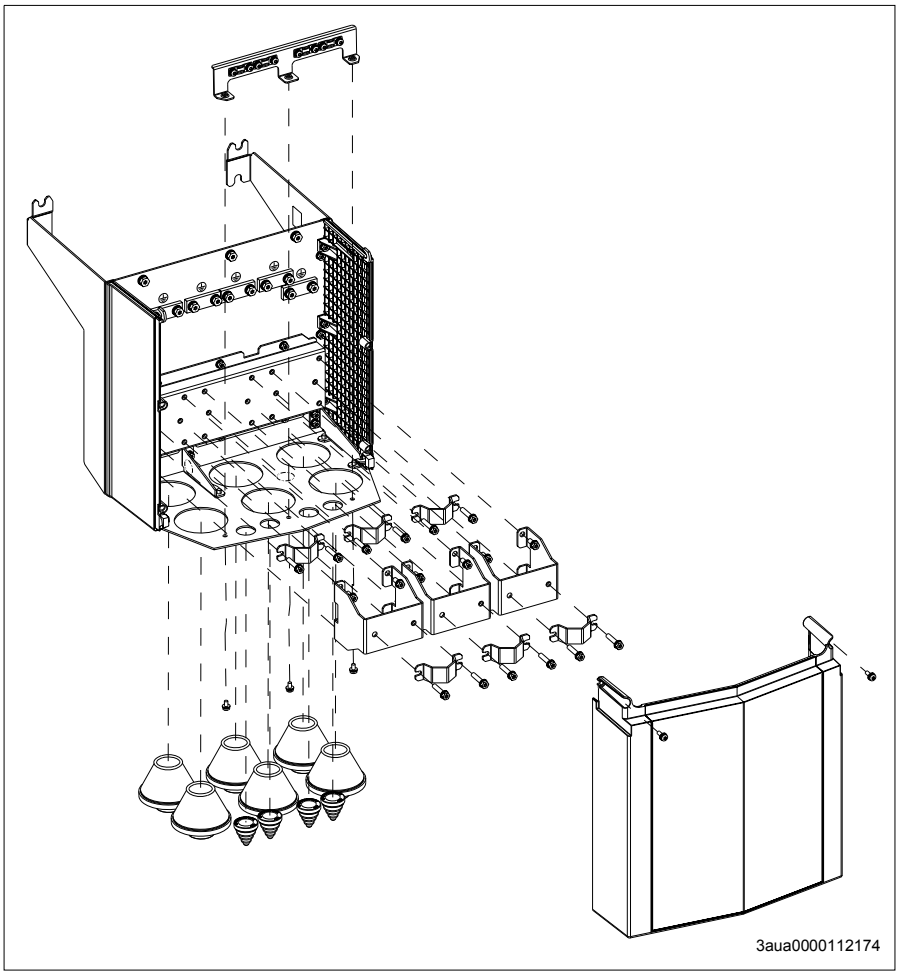

Frame R9 cable box (IP21, UL Type 1)

The figure below shows the contents of the cable box package. The package also includes an assembly drawing which shows how to install the cable box to the drive frame.

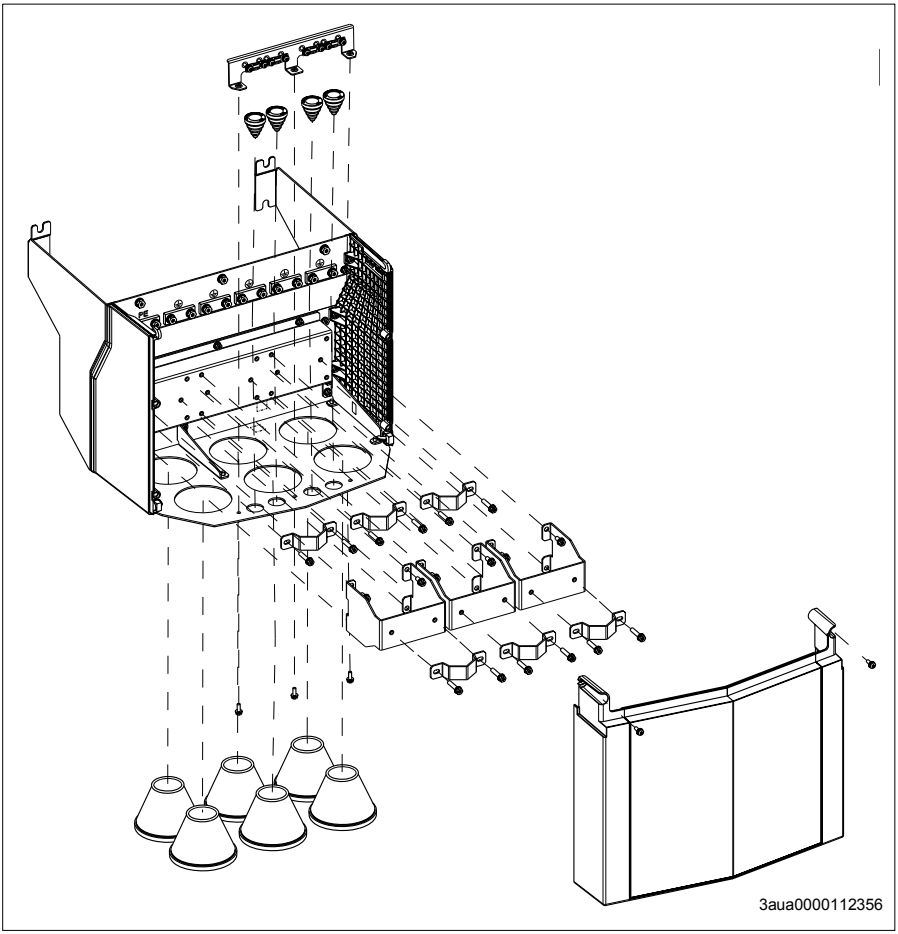

Installing the drive

Installing the drive vertically, frames R0…R4

The figures show frame R0 as an example.

1. Mark the hole locations using the mounting template included in the package. Do not leave the mounting template under the drive. The drive dimensions and hole locations are also shown in the drawings in chapter *Dimension drawings* on page *185*.
2. Drill the mounting holes.
3. Insert anchors or plugs into the holes and start the screws or bolts into the anchors or plugs.

   Use a sufficient number of screws or bolts and drive them long enough into the wall to make them carry the weight of the drive.

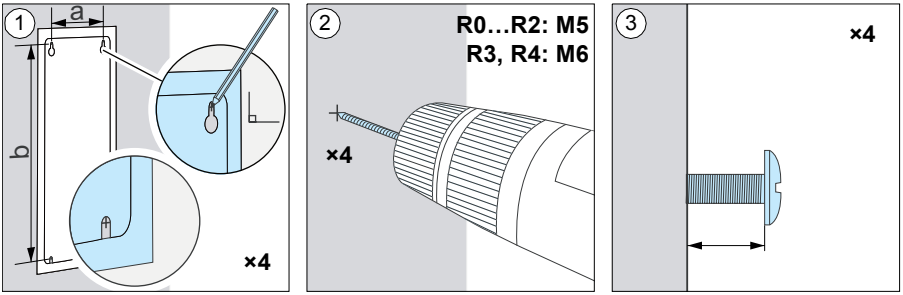

	R0		R1		R2		R3		R4	
	mm	in	mm	in	mm	in	mm	in	mm	in
a	98	3.86	98	3.86	98	3.86	160	6.30	160	6.30
b	317	12.48	317	12.48	417	16.42	473	18.62	619	24.37
Weight	kg	lb	kg	lb	kg	lb	kg	lb	kg	lb
IP21 (UL Type1)	4.47	9.86	4.57	10.08	7.54	16.63	14.86	32.77	19	41.90
Weight	kg	lb	kg	lb	kg	lb	kg	lb	kg	lb
IP55 (UL Type12)	5.06	11.16	5.48	12.08	7.81	17.22	15.11	33.32	20	44.10

4. Position the drive onto the bolts on the wall.
5. Tighten the bolts in the wall securely.

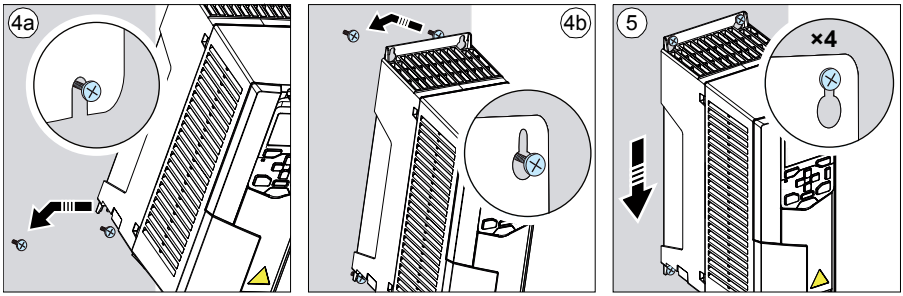

Installing the drive vertically, frame R5

1. Mark the hole locations using the mounting template included in the package. Do not leave the mounting template under the drive. The drive dimensions and hole locations are also shown in the drawings in chapter *Dimension drawings* on page *185*.
2. Drill the mounting holes.
3. Insert fixing anchors or plugs into the holes. Start the two upper bolts and the two lowest bolts into the anchors or plugs.

   Drive the bolts long enough into the wall to make them carry the weight of the drive.

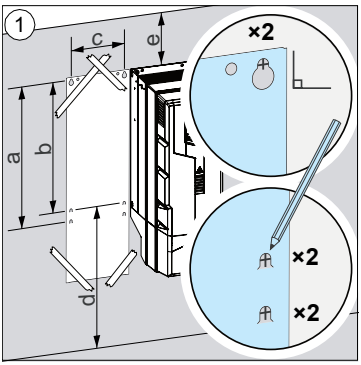

	R5 IP21 (UL Type 1)		R5 IP55 (UL Type 12)	
	mm	in	mm	in
a	612	24.09	612	24.09
b	581	22.87	581	22.87
c	160	6.30	160	6.30
d >	200	7.9	200	7.9
e >	200	7.9	200	7.9

⚠	R5 IP21 (UL Type 1)		R5 IP55 (UL Type 12)	
	kg	lb	kg	lb
	28.3	62.4	28.6	63.1

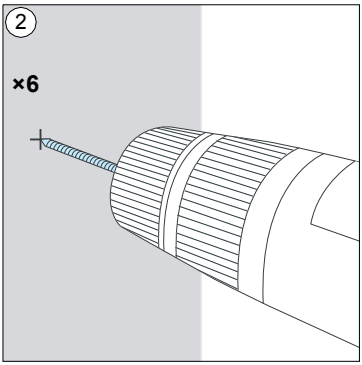

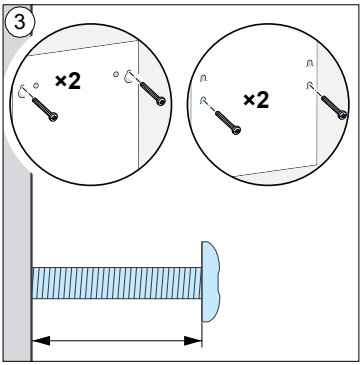

IP21 (UL Type 1)

4. Remove the front cover: Remove the fastening screws (4a) and lift the cover from the bottom upwards (4b) and then to the top side (4c).
5. Attach the cable box to the drive frame.
6. Tighten the box screws.
7. Slide the box cover from the bottom (7a) and tighten the retaining screws (7b).
8. Put the tabs at the top of the front cover in their counterparts on the housing and then press at the bottom (8a) and tighten the retaining screws (8b).

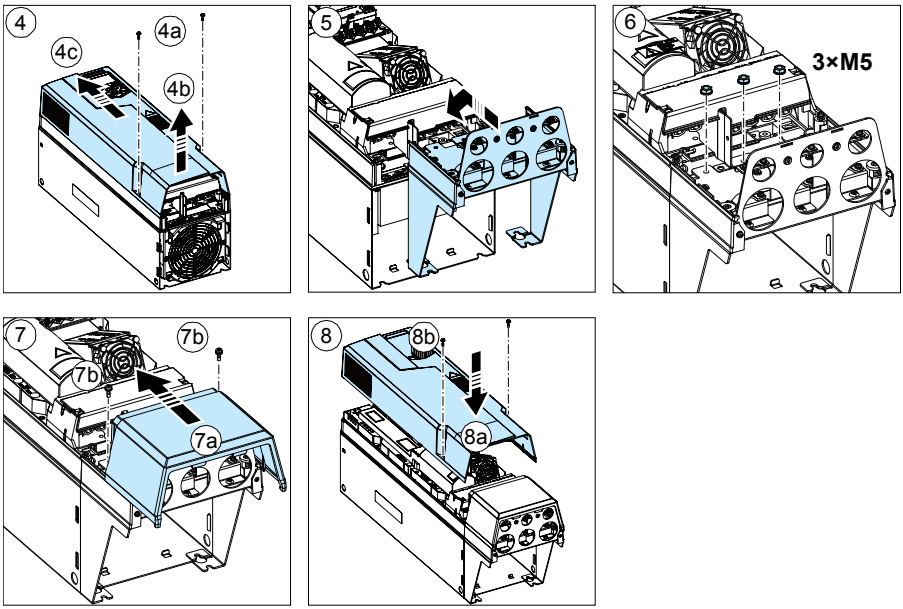

IP21 (UL Type 1), IP55 (UL Type 12)

9. Position the drive onto the four bolts on the wall. Lift the drive with another person or with a lifting device as it is heavy. Tighten the bolts in the wall securely.

10. Tighten the two remaining bolts securely.

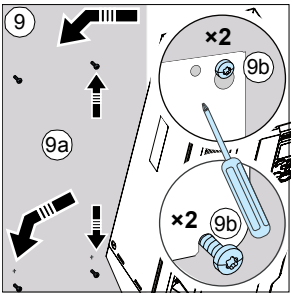

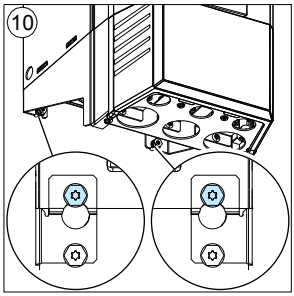

Installing the drive vertically, frames R6…R9

1. Mark the hole locations for the six mounting holes using the mounting template included in the package. Do not leave the mounting template under the drive.

   The drive dimensions and hole locations are also shown in the drawings in chapter *Dimension drawings* on page *185*.

Note: You can use only two bolts instead of four to attach the lower part of the drive.

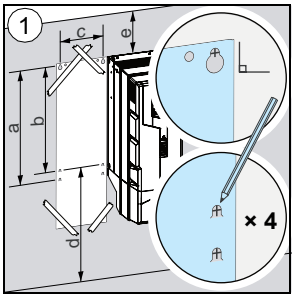

	R6		R7		R8		R9	
	mm	in	mm	in	mm	in	mm	in
a	571	22.5	623	24.5	701	27.6	718	28.3
b	531	20.9	583	22.9	658	25.9	658	25.9
c	213	8.4	245	9.7	263	10.4	345	13.6
d	300	11.8	300	11.8	300	11.8	300	11.8
e	200	7.9	200	7.9	200	7.9	200	7.9
IP21, UL Type 1	kg	lb	kg	lb	kg	lb	kg	lb
⚠	42	93.5	54	119	69	152	97	213.9
IP55, UL Type 12	kg	lb	kg	lb	kg	lb	kg	lb
⚠	43	94.8	56	123.5	77	169.8	103	227.1

2. Drill the mounting holes.
3. Insert fixing anchors or plugs into the holes and start the bolts into the anchors or plugs.

   Use a sufficient number of bolts and drive them long enough into the wall to make them carry the weight of the drive.
4. Position the drive onto the bolts on the wall. Lift the drive with another person as it is heavy.
5. Tighten the bolts in the wall securely.

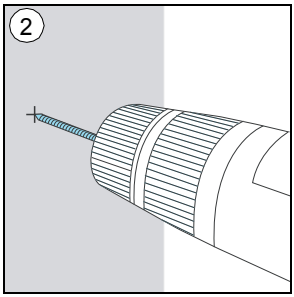

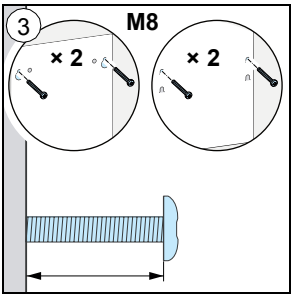

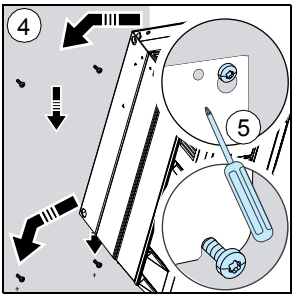

IP21 (UL Type 1)

6. Remove the front cover: Remove the fastening screws (a), move the cover to the top side (b) and then up (c).
7. Attach the cable box to the drive frame.
8. Tighten the box screws: two at the top and four at the bottom.

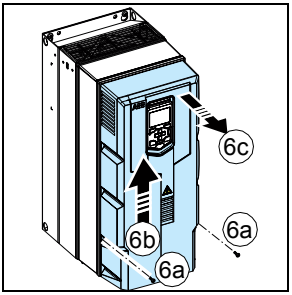

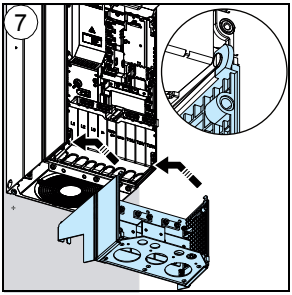

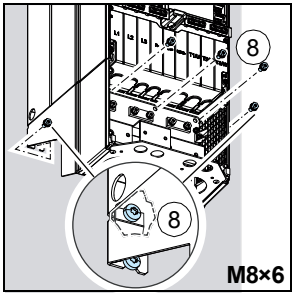

IP55 (UL Type 12)

9. Remove the front cover: Remove the fastening screws (a), move the cover to the top side (b) and then up (c).

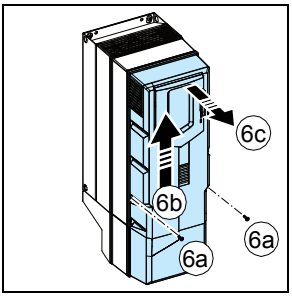

Installing the drive vertically side by side

Install the drive following the steps in the appropriate section *Installing the drive vertically, frames R0…R4* (page *51*), *Installing the drive vertically, frame R5* (page *53*) or *Installing the drive vertically, frames R6…R9* (page *56*).

Installing the drive horizontally, frames R0…R3

Install the drive following the steps in section *Installing the drive vertically, frames R0…R4* (page *51*). The drive can be installed either the left or right side up.

Flange mounting

Instructions for flange mounting are delivered with the flange mounting kit: *Flange mounting kit quick installation guide forACX580-01 frames R0 to R5* (3AXD50000036610 [English]) or *Flange mounting kit quick installation guide for ACS880-01 and ACX580-01 frames R6 to R9* (3AXD50000019099 [English]). For more information on flange mounting, see *Flange mounting kit installation supplement* (3AXD50000019100 [English]).

5

Planning the electrical installation

Contents of this chapter

This chapter contains instructions for planning the electrical installation of the drive, for example, for checking the compatibility of the motor and drive, selecting cables, protections and cable routing.

Note: The installation must always be designed and made according to applicable local laws and regulations. The manufacturer does not assume any liability whatsoever for any installation which breaches the local laws and/or other regulations. Furthermore, if the recommendations given by the manufacturer are not followed, the drive may experience problems that the warranty does not cover.

Selecting the supply disconnecting device

Install a hand-operated input disconnecting device between the AC power source and the drive. The disconnecting device must be of a type that can be locked to the open position for installation and maintenance work.

European Union

To meet the European Union Directives, according to standard EN 60204-1, *Safety of Machinery*, the disconnecting device must be one of the following types:

- switch-disconnector of utilization category AC-23B (EN 60947-3)
- disconnector that has an auxiliary contact that in all cases causes switching devices to break the load circuit before the opening of the main contacts of the disconnector (EN 60947-3)
- circuit breaker suitable for isolation in accordance with EN 60947-2.

Other regions

The disconnecting device must conform to the applicable local safety regulations.

Checking the compatibility of the motor and drive

Use an asynchronous AC induction motor, permanent magnet motor or synchronous reluctance motor with the drive. Several induction motors can be connected to the drive at a time but only one permanent magnet motor can be connected to the drive at a time.

Check that the motor and the drive are compatible according to the rating table in section *Ratings* on page *144*. The table lists the typical motor power for each drive type.

Selecting the power cables

General rules

Select the input power and motor cables **according to local regulations**:

- The input power and the motor cables must be able to carry the corresponding load currents. See section *Ratings* (page *144*) for the rated currents.
- The cable must be rated for at least 70 °C maximum permissible temperature of conductor in continuous use. For US, see *Additional US requirements,* page *63.*
- The conductivity of the PE conductor must be sufficient, see the table on page *60*.
- 600 V AC cable is accepted for up to 500 V AC.

To comply with the EMC requirements of the CE mark, use one of the approved cable types in section *Recommended power cable types* on page *62*.

Symmetrical shielded cable reduces electromagnetic emission of the whole drive system as well as the stress on motor insulation, bearing currents and wear.

The protective conductor must always have an adequate conductivity. The table below shows the minimum cross-sectional area related to the phase conductor size according to IEC 61439-1 when the phase conductor and the protective conductor are made of the same metal.

Cross-sectional area of the phase conductors S (mm^2)	**Minimum cross-sectional area of the corresponding protective conductor S_p (mm^2)**
$S \leq 16$	S
$16 < S \leq 35$	16
$35 < S$	S/2

Note: See the IEC/EN 61800-5-1 requirement on grounding in the Note on page *18*.

Typical power cable sizes

The table below gives copper cable types with concentric copper shield for the drives with nominal current. The value separated by the plus sign means the diameter of the PE conductor.

Drive type ACH580	Frame size	IEC[1)]		US	
		Cu cable type	Al cable type[2)]	Cu cable type	Al cable type[3)]
		mm^2	mm^2	AWG/kcmil	AWG/kcmil
3-phase U_N = 400 V (380…480 V)					
01-02A6-4	R0	3×1.5 + 1.5	-	16	-
01-03A3-4	R0	3×1.5 + 1.5	-	16	-
01-04A0-4	R0	3×1.5 + 1.5	-	16	-
01-05A6-4	R0	3×1.5 + 1.5	-	16	-
01-07A2-4	R1	3×1.5 + 1.5	-	16	-
01-09A4-4	R1	3×2.5 + 2.5	-	14	-
01-12A6-4	R1	3×2.5 + 2.5	-	14	-
01-017A-4	R2	3×2.5 + 2.5	-	14	-
01-025A-4	R2	3×6 + 6	-	10	-
01-032A-4	R3	3×10 + 10	-	8	-
01-038A-4	R3	3×10 + 10	-	8	-
01-045A-4	R3	3×16 +16	-	6	-
01-062A-4	R4	3×25 + 16	-	4	-
01-073A-4	R4	3×35 + 16	-	2	-
01-088A-4	R5	3×50 + 25	3×70	1/0	-
01-106A-4	R5	3×70 + 35	3×70	2/0	-
01-145A-4	R6	3×95 + 50	3×120	3/0	-
01-169A-4	R7	3×120 + 70	3×150	250 MCM	-
01-206A-4	R7	3×150 + 70	3×240	300 MCM	-
01-246A-4	R8	2×(3×70+35)	2×(3×95)	2×2/0	-
01-293A-4	R8	2×(3×95+50)	2×(3×120)	2×3/0	-
01-363A-4	R9	2×(3×120+70)	2×(3×185)	2×250 MCM	-
01-430A-4	R9	2×(3×150+70)	2×(3×240)	2×300 MCM	-

3AXD00000586715.xls H

[1)] The cable sizing is based on max. 6 cables laid on a cable ladder side by side, ambient temperature 30 °C, PVC insulation, surface temperature 70 °C (EN 60204-1 and IEC 60364-5-52/2001). For other conditions, size the cables according to local safety regulations, appropriate input voltage and the load current of the drive. See also page *161* for the accepted cable sizes of the drive.

[2)] Aluminum cables must not be used with frames R0…R4.

[3)] In the USA, aluminum cables must not be used.

See also section *Terminal and lead-through data for the power cables* on page *161*.

Alternative power cable types

The recommended and the not allowed power cable types to be used with the drive are presented below.

Recommended power cable types

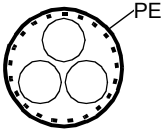	Symmetrical shielded cable with three phase conductors and a concentric PE conductor as the shield. The shield must meet the requirements of IEC 61439-1, see page *60*. Check with local/state/country electrical codes for allowance.
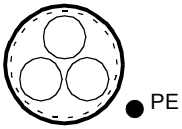	Symmetrical shielded cable with three phase conductors and a concentric PE conductor as the shield. A separate PE conductor is required if the shield does not meet the requirements of IEC 61439-1, see page *60*.
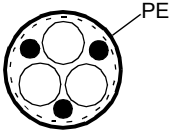	Symmetrical shielded cable with three phase conductors and symmetrically constructed PE conductor, and a shield. The PE conductor must meet the requirements of IEC 61439-1, see page *60*.

Power cable types for limited use

	A four-conductor system (three phase conductors and a protective conductor on a cable tray) is **not allowed for motor cabling** (it is allowed for input cabling).
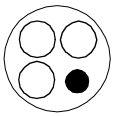	A four-conductor system (three phase conductors and a PE conductor in a PVC conduit) is **allowed for input cabling with phase conductor cross-section less than 10 mm^2 (8 AWG) or motors ≤ 30 kW (40 hp)**. Not allowed in the USA.
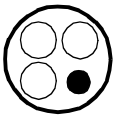	Corrugated or EMT cable with three phase conductors and a protective conductor is allowed for motor cabling with phase conductor cross section less than 10 mm^2 (8 AWG) or motors ≤ 30 kW (40 hp).

Not allowed power cable types

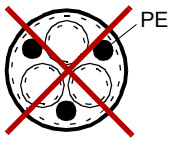	Symmetrical shielded cable with individual shields for each phase conductor is not allowed on any cable size for input or motor cabling.

Motor cable shield

If the motor cable shield is used as the sole protective earth conductor of the motor, make sure that the conductivity of the shield is sufficient. See section *General rules* above, or IEC 61439-1.

To effectively suppress radiated and conducted radio-frequency emissions, the cable shield conductivity must be at least 1/10 of the phase conductor conductivity. The requirements are easily met with a copper or aluminum shield. The minimum requirement of the motor cable shield of the drive is shown below. It consists of a concentric layer of copper wires with an open helix of copper tape or copper wire. The better and tighter the shield, the lower the emission level and bearing currents.

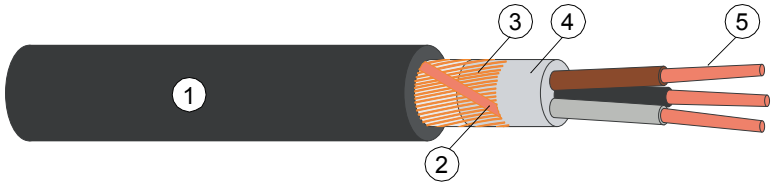

1	Sheath
2	Copper wire shield
3	Helix of copper tape or copper wire
4	Filling
5	Cable conductors

Additional US requirements

Use type MC continuous corrugated aluminum armor cable with symmetrical grounds or shielded power cable for the motor cables if metallic conduit is not used. For the North American market, 600 V AC cable is accepted for up to 500 V AC. 1000 V AC cable is required above 500 V AC (below 600 V AC). For drives rated over 100 amperes, the power cables must be rated for 75 °C (167 °F).

Conduit

Couple separate parts of a conduit together: bridge the joints with a ground conductor bonded to the conduit on each side of the joint. Also bond the conduits to the drive enclosure and motor frame. Use separate conduits for input power, motor, brake resistor, and control wiring. When conduit is employed, type MC continuous corrugated aluminum armor cable or shielded cable is not required. A dedicated ground cable is always required.

Note: Do not run motor wiring from more than one drive in the same conduit.

Armored cable / shielded power cable

Six-conductor (three phases and three ground) type MC continuous corrugated aluminum armor cable with symmetrical grounds is available from the following suppliers (trade names in parentheses):

- Anixter Wire & Cable (Philsheath)
- BICC General Corp (Philsheath)
- Rockbestos Co. (Gardex)
- Oaknite (CLX).

Shielded power cables are available from the following suppliers:

- Belden
- LAPPKABEL (ÖLFLEX)
- Pirelli.

Selecting the control cables

Shielding

All control cables must be shielded.

Use a double-shielded twisted pair cable (figure a below) for analog signals. Employ one individually shielded pair for each signal. Do not use common return for different analog signals.

A double-shielded cable is the best alternative for low-voltage digital signals but single-shielded (b) twisted pair cable is also acceptable.

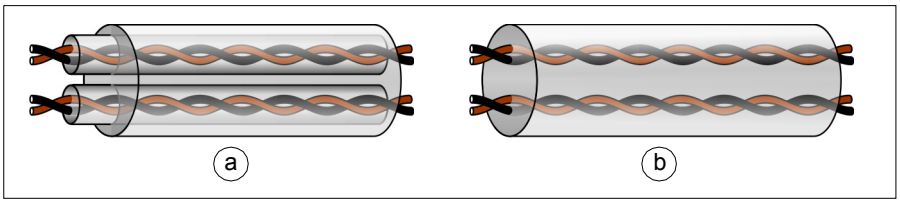

Signals in separate cables

Run analog and digital signals in separate, shielded cables.

Do not mix 24 V AC/DC and 115/230 V AC signals in the same cable.

Signals allowed to be run in the same cable

Relay-controlled signals, providing their voltage does not exceed 48 V, can be run in the same cables as digital input signals. The relay-controlled signals should be run as twisted pairs.

Relay cable

The cable type with braided metallic screen (for example ÖLFLEX by LAPPKABEL, Germany) has been tested and approved by the manufacturer.

Control panel cable

In remote use, the cable connecting the control panel to the drive must not exceed 100 m (330 ft). If multiple drives are connected, the total length of the panel bus must not exceed 100 m (330 ft).

The cable type tested and approved by the manufacturer is used in control panel option kits. Suitable cables are CAT 5e unshielded or shielded twisted pair cables.

Drive composer PC tool cable

Connect the Drive composer PC tool to the drive through the USB port of the control panel. Use a USB type A (PC) - type B (control panel) cable. The maximum length of the cable is 3 m (9.8 ft).

FPBA-01 PROFIBUS DP adapter module connectors

Frames R0…R3: The following connector types have been tested to fit in the tight space for option slot 1.

- Phoenix Contact SUBCON-PLUS-PROFIB/PG/SC2, part number 2708245. Lead the cable through the control cable hole on the right in the lead-through plate (1).
- Siemens, part number 6GK1 500 0EA02. Lead the cable through the middle control cable hole in the lead-through plate (2).

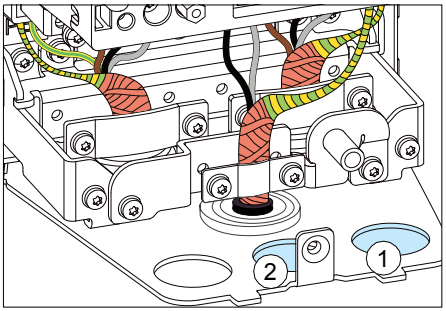

Routing the cables

General rules

Route the motor cable away from other cable routes. Motor cables of several drives can be run in parallel installed next to each other. The motor cable, input power cable and control cables should be installed on separate trays. Avoid long parallel runs of motor cables with other cables in order to decrease electromagnetic interference caused by the rapid changes in the drive output voltage.

Where control cables must cross power cables, make sure they are arranged at an angle as near to 90 degrees as possible. Do not run extra cables through the drive.

The cable trays must have good electrical bonding to each other and to the grounding electrodes. Aluminum tray systems can be used to improve local equalizing of potential.

A diagram of the cable routing is shown below.

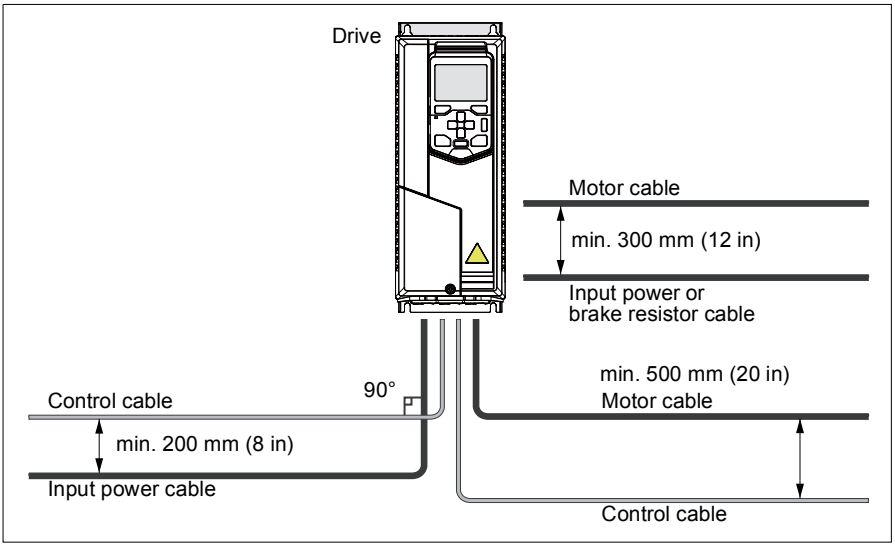

Separate control cable ducts

Lead 24 V and 230 V (120 V) control cables in separate ducts unless the 24 V cable is insulated for 230 V (120 V) or insulated with an insulation sleeving for 230 V (120 V).

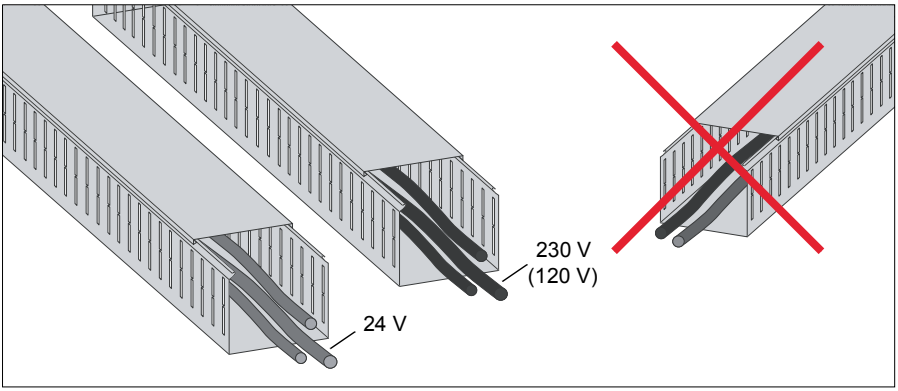

Continuous motor cable shield or enclosure for equipment on the motor cable

To minimize the emission level when safety switches, contactors, connection boxes or similar equipment are installed on the motor cable between the drive and the motor:

- European Union: Install the equipment in a metal enclosure with 360 degree grounding for the shields of both the incoming and outgoing cable, or connect the shields of the cables otherwise together.
- US: Install the equipment in a metal enclosure in a way that the conduit or motor cable shielding runs consistently without breaks from the drive to the motor.

Implementing thermal overload and short-circuit protection

Protecting the drive and input power cable in short-circuits

Protect the drive and input cable with fuses as follows:

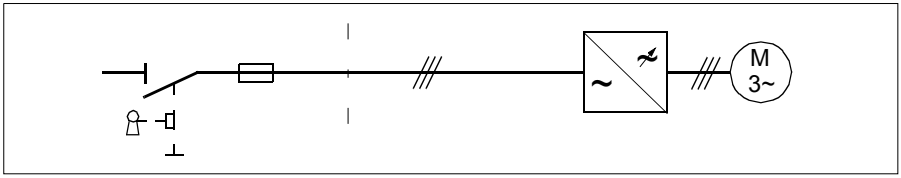

Size the fuses at the distribution board according to instructions given in chapter *Technical data* on page *143*. The fuses will protect the input cable in short-circuit situations, restrict drive damage and prevent damage to adjoining equipment in case of a short-circuit inside the drive.

Note: If you want to use circuit breakers, contact the manufacturer for more information.

Protecting the motor and motor cable in short-circuits

The drive protects the motor cable and motor in a short-circuit situation when the motor cable is sized according to the nominal current of the drive. No additional protection devices are needed.

Protecting the drive and the input power and motor cables against thermal overload

The drive protects itself and the input and motor cables against thermal overload when the cables are sized according to the nominal current of the drive. No additional thermal protection devices are needed.

WARNING! If the drive is connected to multiple motors, use a separate circuit breaker or fuses for protecting each motor cable and motor against overload. The drive overload protection is tuned for the total motor load. It may not trip due to an overload in one motor circuit only

Protecting the motor against thermal overload

According to regulations, the motor must be protected against thermal overload and the current must be switched off when overload is detected. The drive includes a motor thermal protection function that protects the motor and switches off the current when necessary. Depending on a drive parameter value, the function either monitors a calculated temperature value (based on a motor thermal model) or an actual

temperature indication given by motor temperature sensors. The user can tune the thermal model further by feeding in additional motor and load data.

The most common temperature sensors are:

- motor sizes IEC180…225: thermal switch, eg, Klixon
- motor sizes IEC200…250 and larger: PTC or Pt100.

For more information, see *ACH580 HVAC control program firmware manual* (3AXD50000027537 [English]).

Protecting the drive against ground faults

The drive is equipped with an internal ground fault protective function to protect the unit against ground faults in the motor and motor cable. This is not a personnel safety or a fire protection feature. The ground fault protective function can be reduced with a parameter 31.20 Earth fault.

Residual current device compatibility

The drive is suitable to be used with residual current devices of Type B.

Note: The EMC filter of the drive includes capacitors connected between the main circuit and the frame. These capacitors and long motor cables increase the ground leakage current and may cause fault current circuit breakers to function.

Implementing the Emergency stop function

For safety reasons, install the emergency stop devices at each operator control station and at other operating stations where emergency stop may be needed. Design the emergency stop according to relevant standards.

Note: Pressing the off key on the control panel of the drive does not generate an emergency stop of the motor or separate the drive from dangerous potential.

Implementing the Safe torque off function

See chapter *Safe torque off function* on page *215*.

Implementing the undervoltage control (power-loss ride-through)

See *ACH580 HVAC control program firmware manual* (3AXD50000027537 [English]).

Using a safety switch between the drive and the motor

It is recommended to install a safety switch between the permanent magnet motor and the drive output. This is needed to isolate the motor from the drive during maintenance work on the drive.

Using a contactor between the drive and the motor

Implementing the control of the output contactor depends on how you select the drive to operate.

When you have selected to use

- Vector control mode and motor ramp stop,

open the contactor as follows:

1. Give a stop command to the drive.
1. Wait until the drive decelerates the motor to zero speed.
2. Open the contactor.

When you have selected to use

- Vector control mode and motor coast stop; or scalar control mode,

open the contactor as follows:

1. Give a stop command to the drive.
2. Open the contactor.

WARNING! When the Vector control mode is in use, never open the output contactor while the drive controls the motor. The vector control operate extremely fast, much faster than it takes for the contactor to open its contacts. When the contactor starts opening while the drive controls the motor, the vector control will try to maintain the load current by immediately increasing the drive output voltage to the maximum. This will damage or destroy the contactor completely.

Protecting the contacts of relay outputs

Inductive loads (relays, contactors, motors) cause voltage transients when switched off.

It is highly recommended that inductive loads are equipped with noise attenuating circuits (varistors, RC filters [AC] or diodes [DC]) in order to minimize the EMC emission at switch-off. If not suppressed, the disturbances may connect capacitively or inductively to other conductors in the control cable and form a risk of malfunction in other parts of the system.

Install the protective component as close to the inductive load as possible. Do not install protective components at the relay outputs.

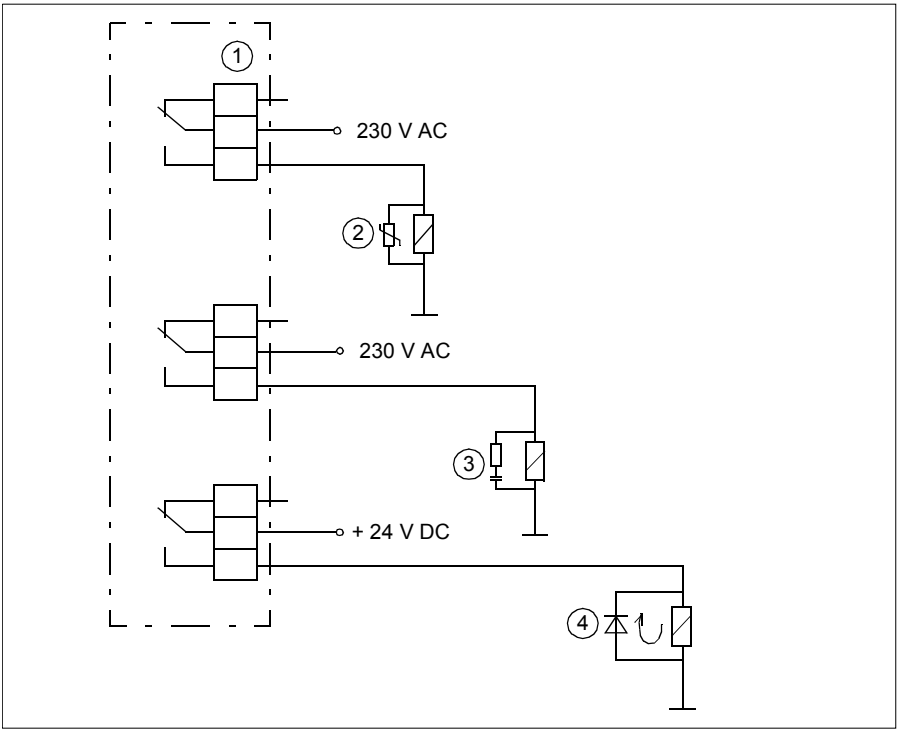

1	Relay outputs
2	Varistor
3	RC filter
4	Diode

Limiting relay output maximum voltages at high installation altitudes

See sections *Isolation areas, R0…R5* on page *171* and *Isolation areas, R6…R9* on page *172*.

6

Electrical installation

Contents of this chapter

The chapter describes how to check the insulation of the assembly and the compatibility with IT (ungrounded) and corner-grounded TN systems. It then shows how to connect the power and control cables, install optional modules and connect a PC.

Warnings

WARNING! Obey the instructions in chapter *Safety instructions* on page *13*. If you ignore them, injury or death, or damage to the equipment can occur.

Make sure that the drive is disconnected from the input power during installation. If the drive is already connected to the input power, wait for 5 minutes after disconnecting the input power.

Required tools

To perform the electrical installation, you need the following tools:

- wire stripper
- screwdriver and/or wrench with a set of suitable bits.

Checking the insulation of the assembly

Drive

Do not make any voltage tolerance or insulation resistance tests on any part of the drive as testing can damage the drive. Every drive has been tested for insulation between the main circuit and the chassis at the factory. Also, there are voltage-limiting circuits inside the drive which cut down the testing voltage automatically.

Input power cable

Check the insulation of the input cable according to local regulations before connecting it to the drive.

Motor and motor cable

Check the insulation of the motor and motor cable as follows:

1. Check that the motor cable is disconnected from the drive output terminals T1/U, T2/V and T3/W.
2. Measure the insulation resistance between the phase conductors and between each phase conductor and the Protective Earth conductor. Use a measuring voltage of 1000 V DC. The insulation resistance of a motor must exceed 100 Mohm (reference value at 25 °C or 77 °F). For the insulation resistance of other motors, please consult the manufacturer's instructions.

   Note: Moisture inside the motor casing will reduce the insulation resistance. If moisture is suspected, dry the motor and repeat the measurement.

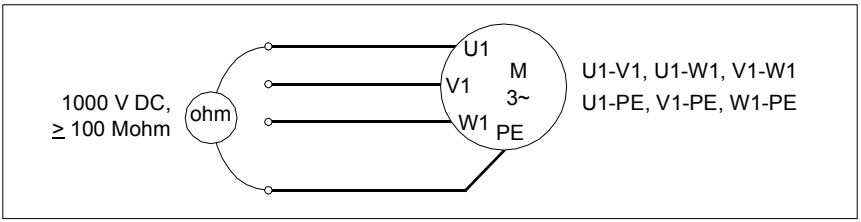

Brake resistor assembly for R0…R3

Check the insulation of the brake resistor assembly (if present) as follows:

1. Check that the resistor cable is connected to the resistor, and disconnected from the drive output terminals R+ and R-.
2. At the drive end, connect the R+ and R- conductors of the resistor cable together. Measure the insulation resistance between the combined conductors and the PE conductor by using a measuring voltage of 1 kV DC. The insulation resistance must be higher than 1 Mohm.

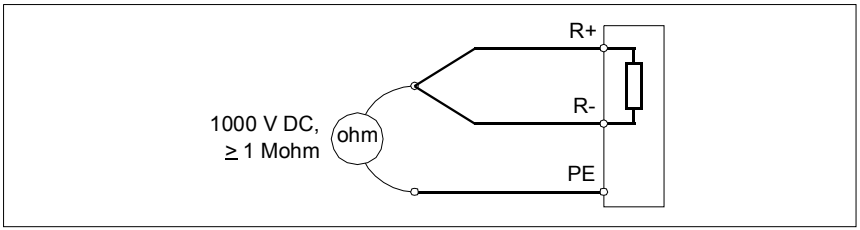

Checking the compatibility with IT (ungrounded) and corner-grounded TN systems

EMC filter

The internal EMC filter is not suitable for use on an IT (ungrounded) system or on a corner-grounded TN system. Disconnect the EMC filter before connecting the drive to the supply network. Check the table on page *76*.

WARNING! Do not install the drive with the internal EMC filter connected on an IT system (an ungrounded power system or a high-resistance-grounded [over 30 ohms] power system), otherwise the system will be connected to ground potential through the EMC filter capacitors of the drive. This can cause danger, or damage the drive.

Do not install the drive with the internal EMC filter connected on a corner-grounded TN system, otherwise the drive will be damaged.

Note: When the internal EMC filter is disconnected, the drive EMC compatibility is considerably reduced. See section *EMC compatibility and motor cable length* on page *167*.

Ground-to-phase varistor

The ground-to-phase varistor is not suitable for use on an IT (ungrounded) system. Disconnect the ground-to-phase varistor before connecting the drive to the supply network. Check the table on page *76*.

WARNING! Do not install the drive with the ground-to-phase varistor connected on an IT system (an ungrounded power system or a high-resistance-grounded [over 30 ohms] power system), otherwise the varistor circuit can be damaged.

Check from the table below if you have to disconnect the EMC filter (EMC) or ground-to-phase varistor (VAR). For instructions on how to do this, see sections *Frames R0…R3* on page *77* or *Frames R4…R9* on page *78*.

Frame sizes	EMC filter (EMC)	Ground-to-phase varistor (VAR)	Symmetrically grounded TN systems (TN-S systems) [1]	Corner grounded TN systems [2]	IT systems (ungrounded or high-resistance grounded [>30 ohms]) [3]
R0…R3	EMC (1 switch)	-	Do not disconnect	Disconnect	Disconnect
	-	VAR (1 switch)	Do not disconnect	Do not disconnect	Disconnect
R4…R5	EMC (2 screws)	-	Do not disconnect	Frames R4 and R5 cannot be used in corner grounded TN systems.	Disconnect
	-	VAR (1 screw)	Do not disconnect		Disconnect
R6…R9	EMC (2 screws)	-	Do not disconnect	Disconnect	Disconnect
	-	VAR (1 screw)	Do not disconnect	Do not disconnect	Disconnect

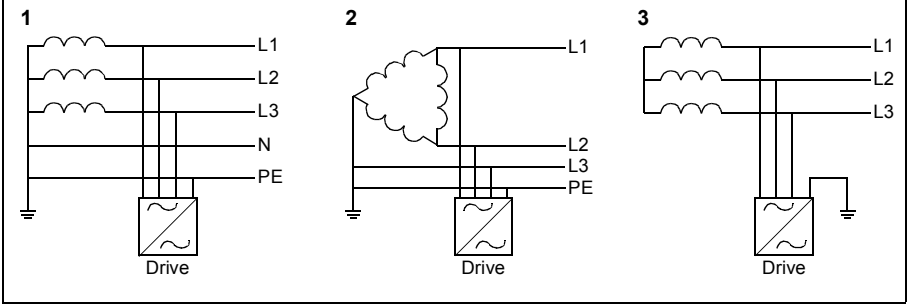

Frames R0…R3

To disconnect the internal EMC filter or ground-to-phase varistor, if needed, do as follows:

1. Switch off the power from the drive.
2. Open the front cover, if not already opened, see page *81*.
3. To disconnect the internal EMC filter, slide the EMC switch in the direction shown by the arrow.
4. To disconnect the ground-to-phase varistor, slide the varistor switch in the direction shown by the arrow.

R0…R2

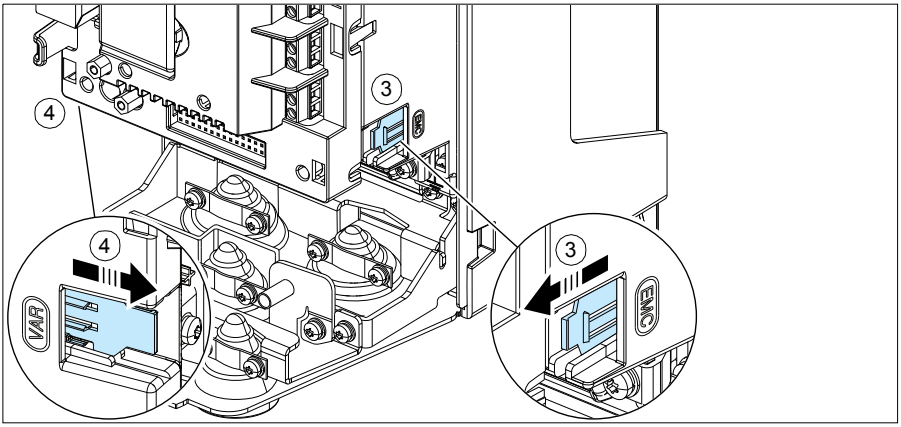

R3

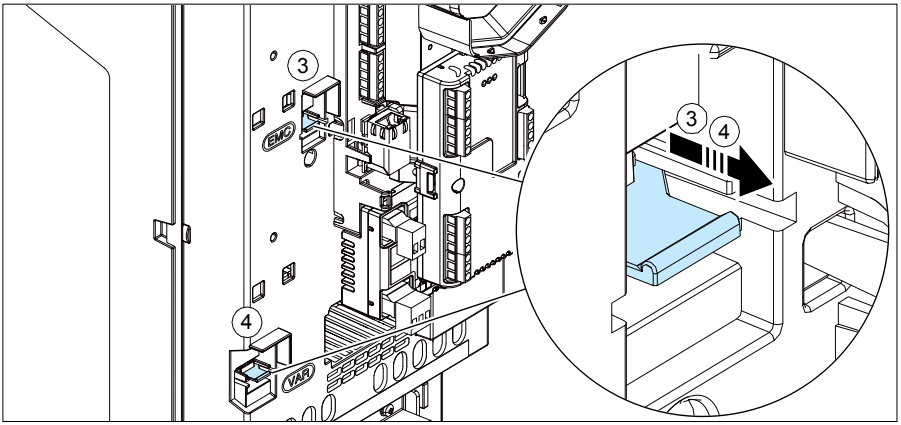

Frames R4…R9

To disconnect the internal EMC filter or ground-to-phase varistor, if needed, do as follows:

1. Switch off the power from the drive.
2. Open the cover, if not already opened. Frame R4: see page *81*, frame R5: see page *90*, frames R6…R9: see page *57*.
3. To disconnect the internal EMC filter, remove the two EMC screws.
4. To disconnect the ground-to-phase varistor, remove the varistor screw.

R4

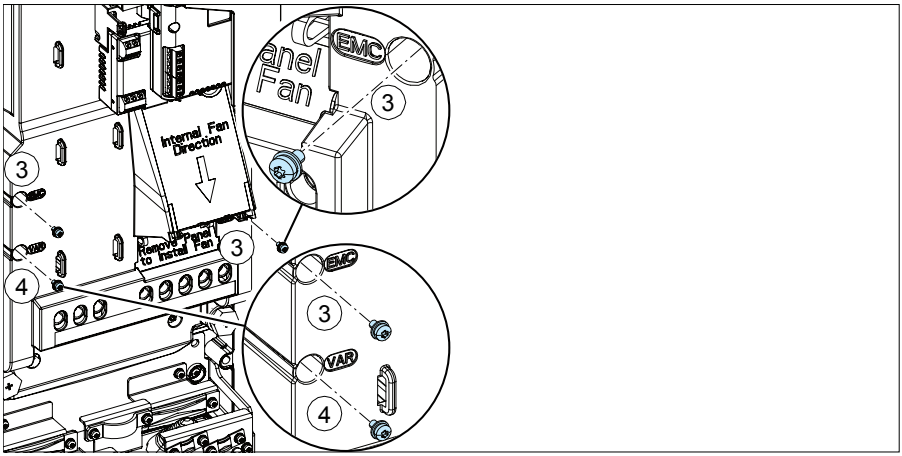

R5

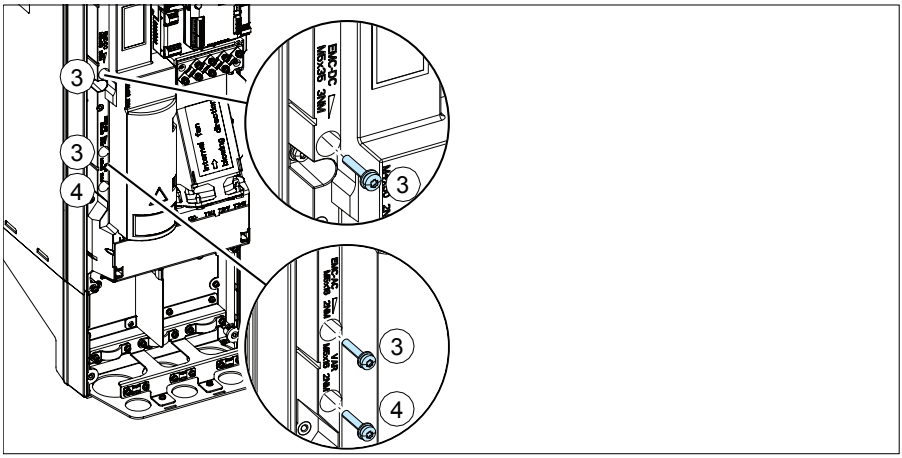

R6…R9

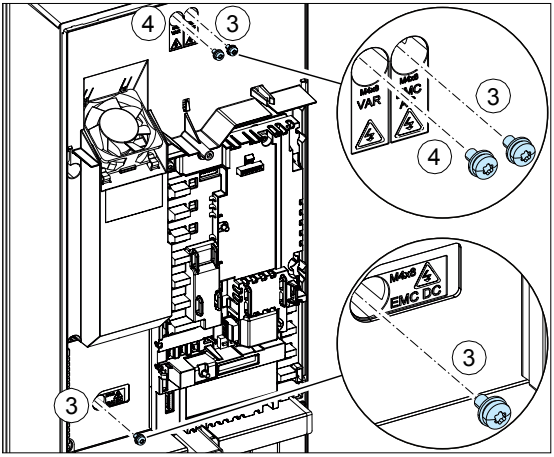

Connecting the power cables

Connection diagram

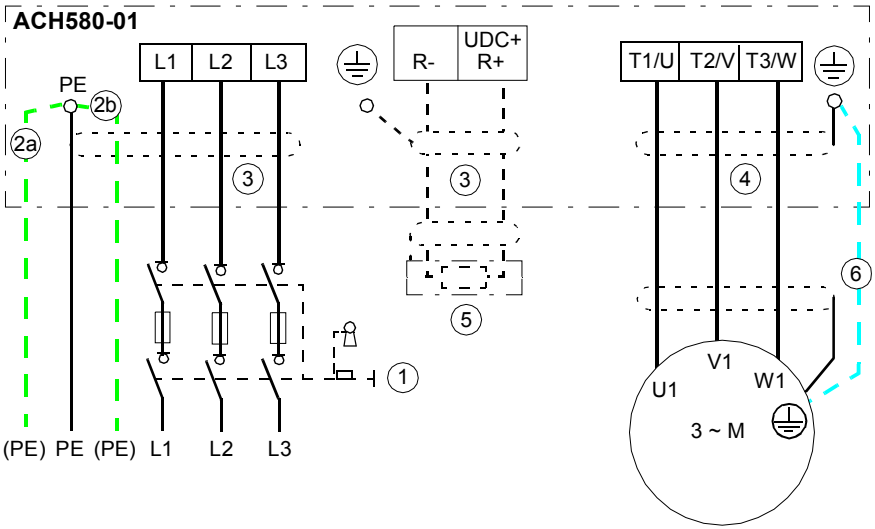

1	For alternatives, see section *Selecting the supply disconnecting device* on page *59*.
2	Use a separate grounding PE cable (2a) or a cable with a separate PE conductor (2b) if the conductivity of the shield does not meet the requirements for the PE conductor (see page *60*).
3	360-degree grounding is recommended if shielded cable is used. Ground the other end of the input cable shield or PE conductor at the distribution board.
4	360-degree grounding is required.
5	External brake resistor.
6	Use a separate grounding cable if the shield does not meet the requirements of IEC 61439-1 (see page *60*) and there is no symmetrically constructed grounding conductor in the cable (see page *63*).

Note:

If there is a symmetrically constructed grounding conductor on the motor cable in addition to the conductive shield, connect the grounding conductor to the grounding terminal at the drive and motor ends.

Do not use an asymmetrically constructed motor cable for motors above 30 kW (see page *60*). Connecting its fourth conductor at the motor end increases bearing currents and causes extra wear.

Connection procedure, frames R0…R4

1. Remove the front cover: Loosen the retaining screw with a screwdriver (1a) and lift the cover from the bottom outwards (1b) and then up (1c).

IP21 (UL Type 1)

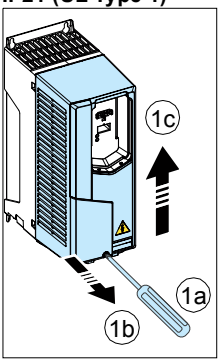

IP55 (UL Type 12), R0…R2

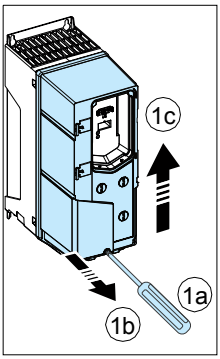

IP55 (UL Type 12), R3

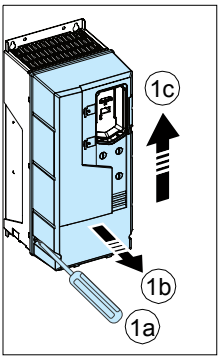

IP55 (UL Type 12), R4

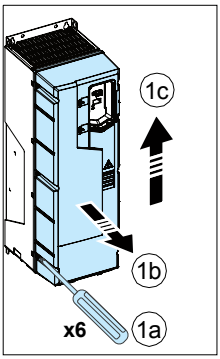

WARNING! If the drive will be connected on an IT (ungrounded) system, make sure you have disconnected the EMC filter and ground-to-phase varistor. See page *75*. If the drive will be connected on a corner-grounded TN system, make sure you have disconnected the EMC filter. See page *75*.

2. Attach the residual voltage warning sticker in the local language.

R0…R1

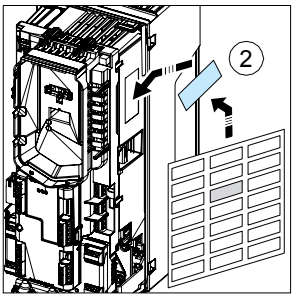

R2

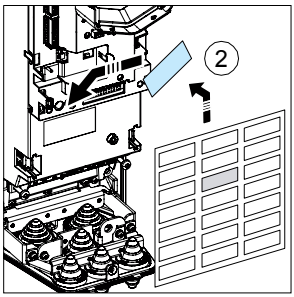

R3…R4

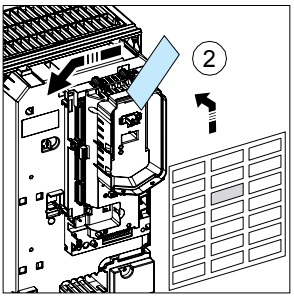

3. Remove the rubber grommets from the lead-through plate.
4. Frames R0…R2, optional: It is possible to temporarily remove the power cable grounding shelf at this point to make it easier to connect the power cable conductors and twisted shields in a tight space. The grounding shelf must be reinstalled before grounding the stripped parts of the power cables 360 degrees.

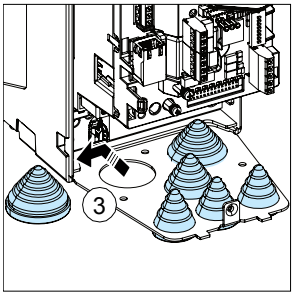

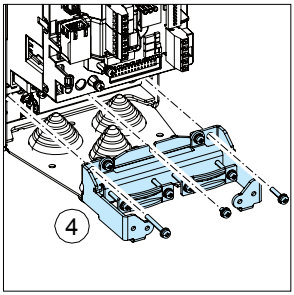

Motor cable

5. Cut an adequate hole into the rubber grommet. Slide the grommet onto the cable.
6. Prepare the ends of the cable as illustrated in the figure. If you use aluminum cables, put grease to the peeled aluminum cable before connecting it to the drive. Two different motor cable types are shown in the figures (6a, 6b). **Note:** The bare shield will be grounded 360 degrees.

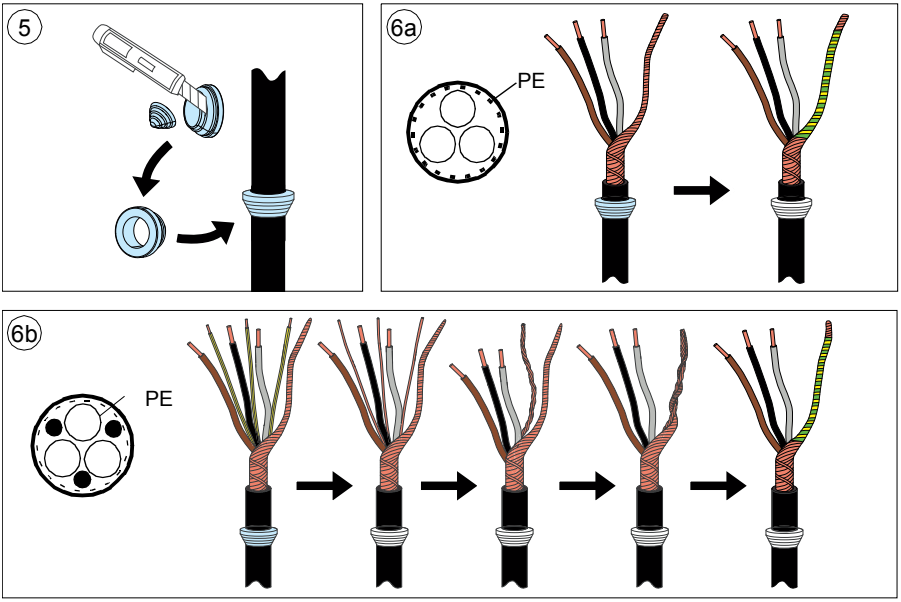

7. Slide the cable through the hole of the lead-through plate and attach the grommet to the hole.

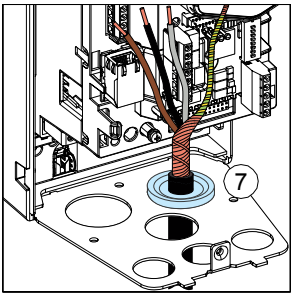

8. Connect the motor cable:

   If you temporarily removed the power cable grounding shelf in step *4*, connect the motor and input power cables except the 360 degree grounding, and then reinstall the grounding shelf. **Note:** The screws are of different length; find out where each of them is used in the figure at step *4*. After reinstalling the grounding shelf, you can make the 360 degree grounding for the cables.

   - Ground the shield 360 degrees by tightening the clamp of the power cable grounding shelf onto the stripped part of the cable. (8a)
   - Connect the twisted shield of the cable to the grounding terminal. (8b)
   - Connect the phase conductors of the cable to the T1/U, T2/V and T3/W terminals. Tighten the screws to the torque given below the figure. (8c).

R0…R2

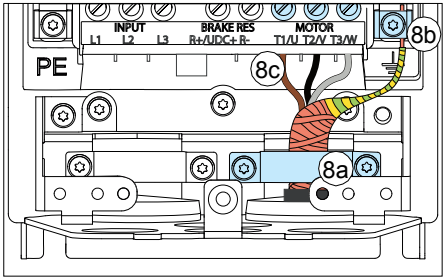

R3

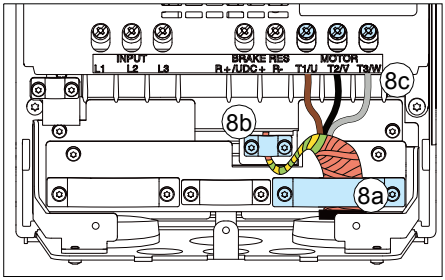

R4

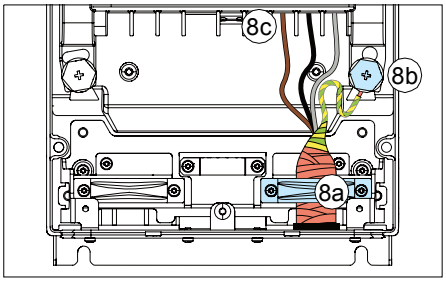

Frame size	R0…R1		R2	
	N·m	lbf·ft	N·m	lbf·ft
T1/U, T2/V, T3/W	0.5…0.6	0.4	1.2…1.5	1.1
PE, ⏚	1.5	1.1	1.5	1.1
⊖	1.2	0.9	1.2	0.9

Frame size	R3		R4	
	N·m	lbf·ft	N·m	lbf·ft
T1/U, T2/V, T3/W	2.5…4.5	3.3	4.0	3.0
PE, ⏚	1.5	1.1	2.9	2.1
⊖	1.2	0.9	1.2	0.9

Input power cable

9. Cut an adequate hole into the rubber grommet. Slide the grommet onto the cable.

10. Prepare the ends of the cable as illustrated in the figure. If you use aluminum cables, put grease to the peeled aluminum cable before connecting it to the drive. **Note:** The bare shield will be grounded 360 degrees. Mark the pigtail made from the shield as a PE conductor with yellow-and-green color.

11. Slide the cable through the hole of the lead-through plate and attach the grommet to the hole.

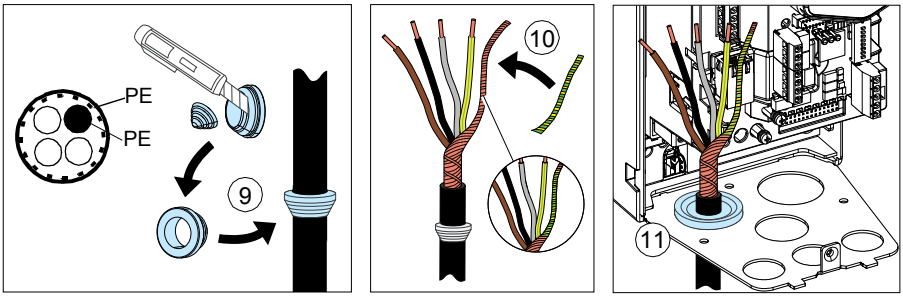

12. Connect the input power cable:
    - Ground the shield 360 degrees by tightening the clamp of the power cable grounding shelf onto the stripped part of the cable. (12a)
    - Connect the twisted shield of the cable to the grounding terminal. (12b)
    - Connect the additional PE conductor (see the note on page *17* in chapter *Safety instructions*) of the cable (12c).
    - Connect the phase conductors of the cable to the L1, L2 and L3 terminals. Tighten the screws to the torque given below the figure. (12d).

R0…R2

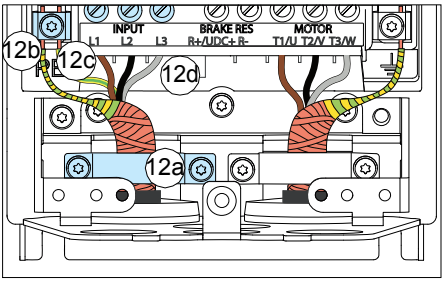

R3

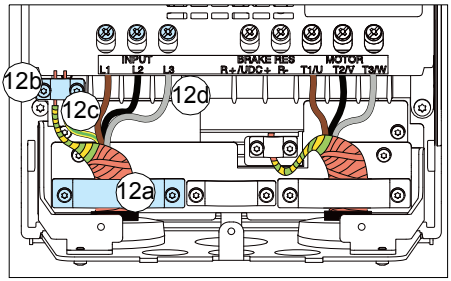

R4

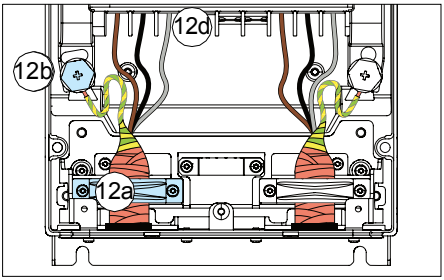

Frame size	R0…R1		R2	
	N·m	lbf·ft	N·m	lbf·ft
L1, L2, L3	0.5…0.6	0.4	1.2…1.5	1.1
PE, ⏚	1.5	1.1	1.5	1.1
⊖	1.2	0.9	1.2	0.9

Frame size	R3		R4	
	N·m	lbf·ft	N·m	lbf·ft
L1, L2, L3	2.5…4.5	3.3	4.0	3.0
PE, ⏚	1.5	1.1	2.9	2.1
⊖	1.2	0.9	1.2	0.9

Brake resistor cable (if used)

Frames R0…R3 only

13. Frames R0…R2: Install the grounding shelf for the brake resistor cable (included with the mounting screws in a plastic bag in the delivery) onto the grounding shelf for the power cables.

R0…R2

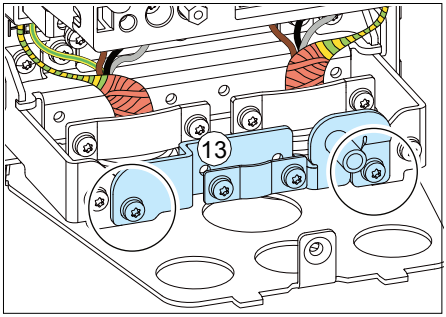

14. Repeat steps *5*…*7* for the brake resistor cable. Cut off one phase conductor.

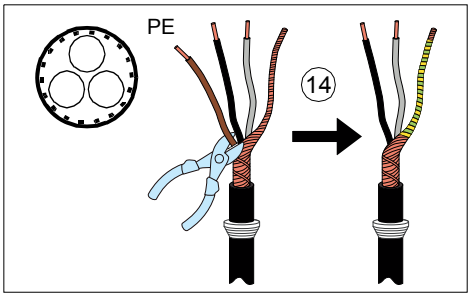

15. Connect the cable as the motor cable in step *8*. Ground the shield 360 degrees (15a). Connect the twisted shield to the grounding terminal (15b) and the conductors to the R+ and R- terminals (15c) and tighten to the torque given below the figure.

R0…R2

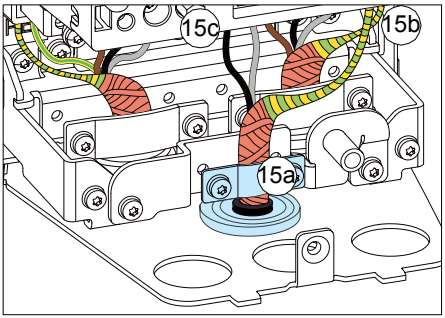

R3

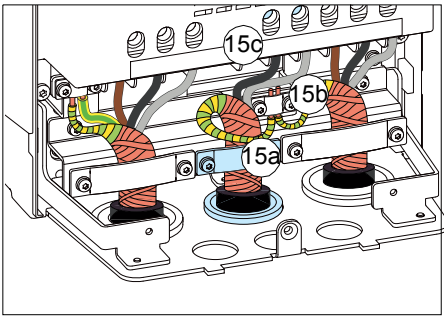

Frame size	R0…R1		R2		R3	
	N·m	lbf·ft	N·m	lbf·ft	N·m	lbf·ft
R+, R-	0.5…0.6	0.4	1.2…1.5	1.1	2.5…4.5	3.3
PE, ⏚	1.5	1.1	1.5	1.1	1.5	1.1
	1.2	0.9	1.2	0.9	1.2	0.9

Finalization

Note: Frames R0…R2: You have to install any optional I/O extension module, if used, in options slot 2 at this point. See section *Installing option modules* on page *117*.

16. Install the grounding shelf for the control cables (included with the mounting screws in a plastic bag in the delivery) onto the grounding shelf for the power cables.

R0…R2

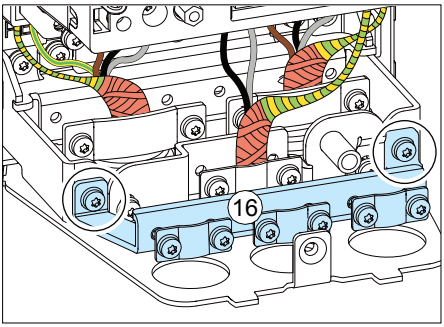

R3

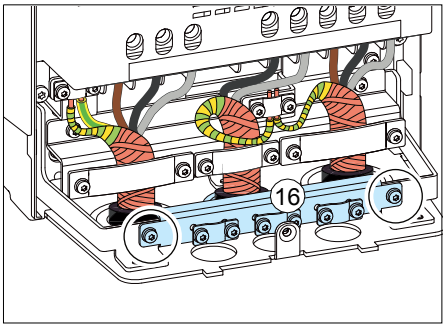

R4

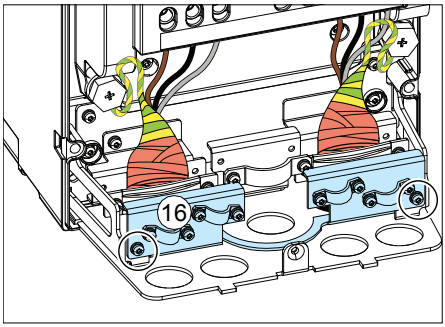

17. Put the (so far) unused rubber grommets to the holes in the lead-through plate, unless you will continue with installing the control cables.

R0…R2

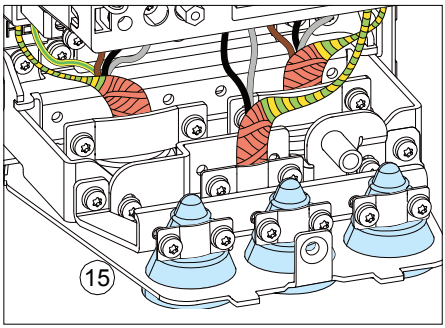

R3

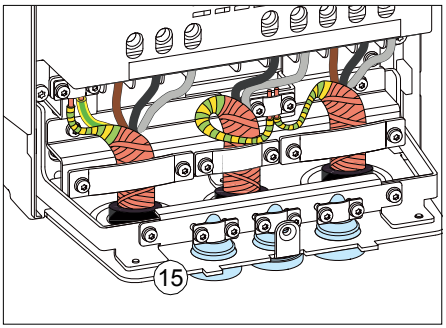

R4

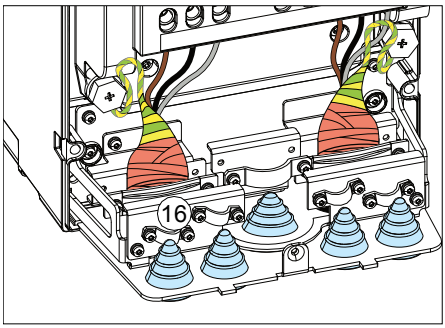

18. Secure the cables outside the unit mechanically.

19. Ground the motor cable shield at the motor end. For minimum radio frequency interference, ground the motor cable shield 360 degrees at the lead-through of the motor terminal box.

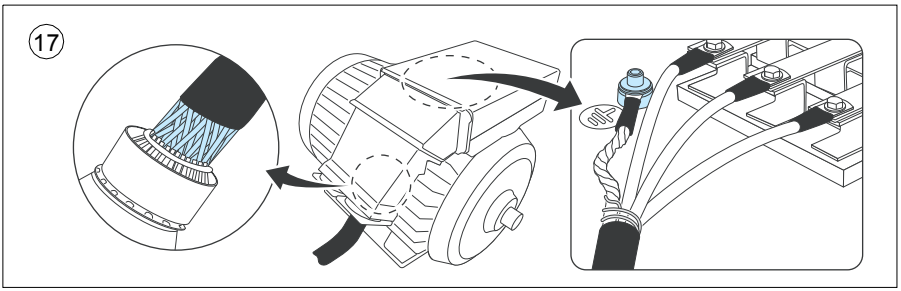

Connection procedure, frame R5

IP21 (UL Type 1)

1. Remove the module cover: Loosen the retaining screws with a screwdriver (1a) and lift the cover from the bottom outwards (1b) and then up (1c).

   Remove the box cover: Loosen the retaining screws with a screwdriver (1d) and slide the cover downwards (1e).

IP55 (UL Type 12)

1. Remove the front cover: Loosen the retaining screws with a screwdriver (1a) and lift the cover from the bottom outwards (1b) and then up (1c).

IP21 (UL Type)

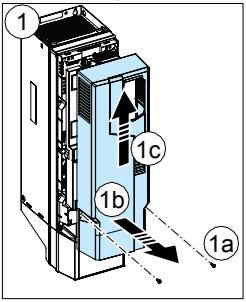

IP21 (UL Type)

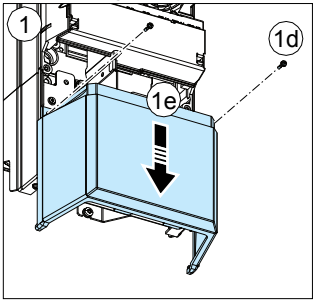

IP55 (UL Type 12)

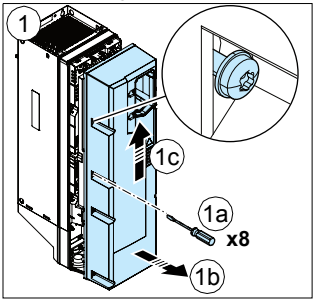

WARNING! If the drive will be connected on an IT (ungrounded) system, make sure you have disconnected the EMC filter and ground-to-phase varistor. See page 75. If the drive will be connected on a corner-grounded TN system, make sure you have disconnected the EMC filter. See page 75.

2. Attach the residual voltage warning sticker in the local language next to the control board.
3. Remove the shroud on the power cable terminals by releasing the clips with a screwdriver (3a) and pulling the shroud out (3b).

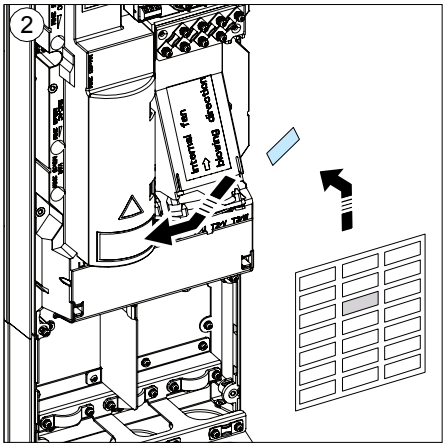

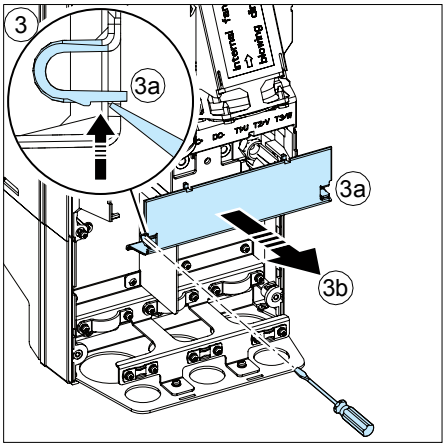

Motor cable

Use symmetrical shielded cable for motor cabling. If the cable shield is the sole PE conductor for drive or motor, make sure that is has sufficient conductivity for the PE.

4. Cut an adequate hole into the rubber grommet. Slide the grommet onto the cable.
5. Prepare the ends of the motor cable as illustrated in figures 5a and 5b (two different motor cable types are shown). If you use aluminum cables, put grease to the peeled aluminum cable before connecting it to the drive. **Note:** The bare shield will be grounded 360 degrees. Mark the pigtail made from the shield as a PE conductor with yellow-and-green color.

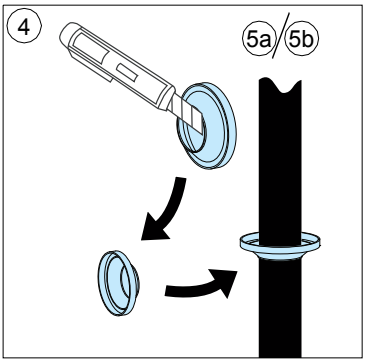

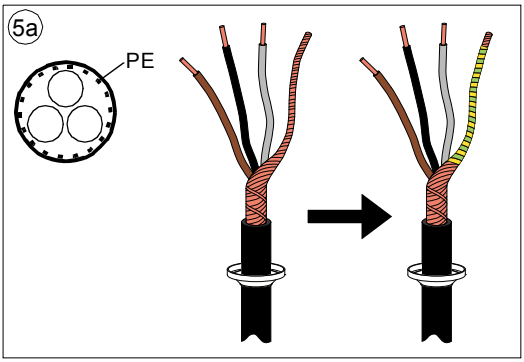

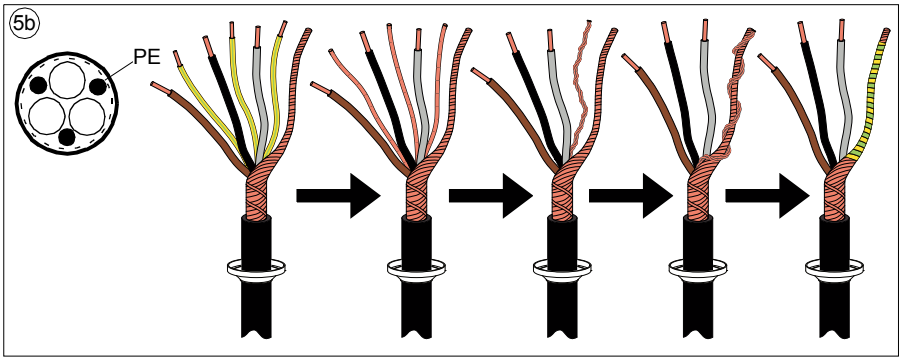

6. Slide the cable through the hole of the bottom plate and attach the grommet to the hole.
7. Connect the motor cable:
   - Ground the shield 360 degrees by tightening the clamp of the power cable grounding shelf onto the stripped part of the cable (7a).
   - Connect the twisted shield of the cable to the grounding terminal (7b).
   - Connect the phase conductors of the cable to the T1/U, T2/V and T3/W terminals (7c). Tighten the screws to the torque given in the figure.

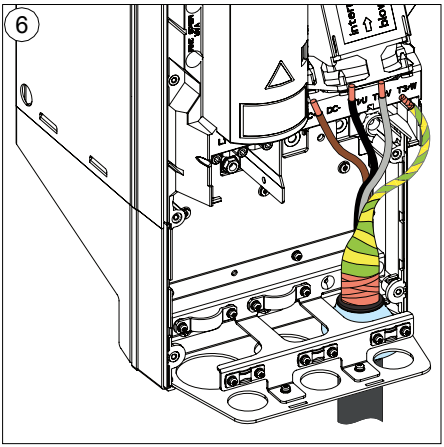

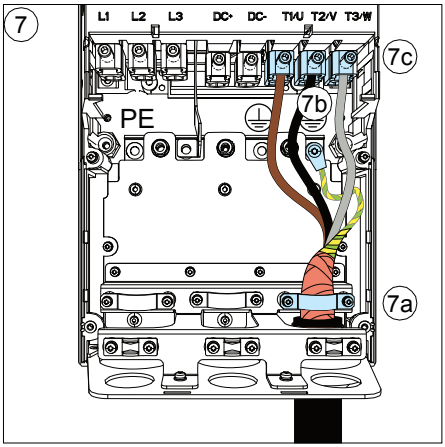

Frame size	T1/U, T2/V, T3/W		PE, ⏚			⊖▭⊖	
	N·m	lbf·ft	M	N·m	lbf·ft	N·m	lbf·ft
R5	5.6	4.1	M5	2.2	1.6	1.2	0.9

Input power cable

8. Repeat steps *4*…*6* for the input power cable.

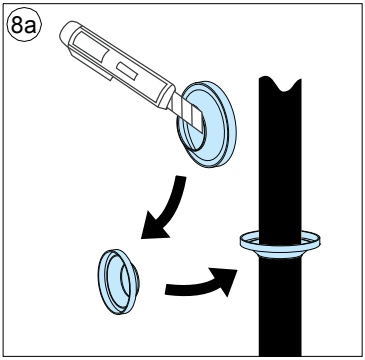

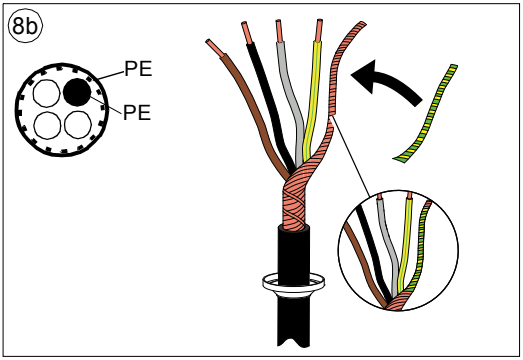

9. Connect the input power cable. Tighten the screws to the torque given in the figure.

10. Install the cable box plate. Position the plate and tighten the screw.

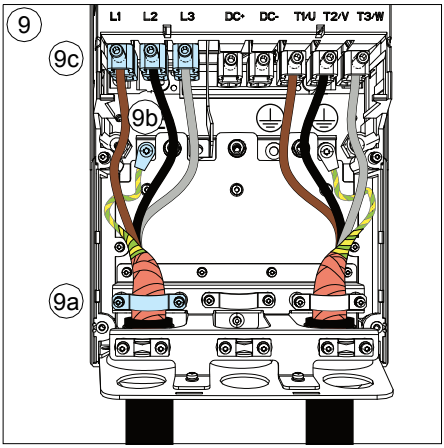

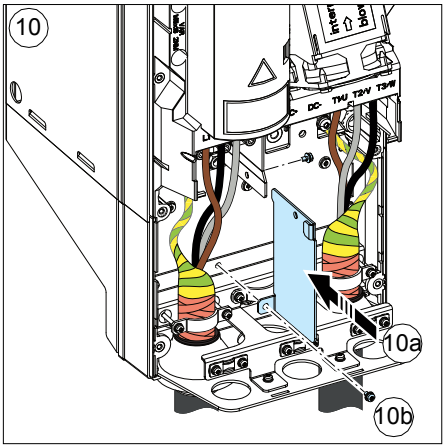

Frame size	L1, L2, L3		PE, ⏚				
	N·m	lbf·ft	M	N·m	lbf·ft	N·m	lbf·ft
R5	5.6	4.1	M5	2.2	1.6	1.2	0.9

11. Reinstall the shroud on the power terminals by putting the tabs at the top of the shroud in their counterparts on the drive frame and then pressing the shroud in place.

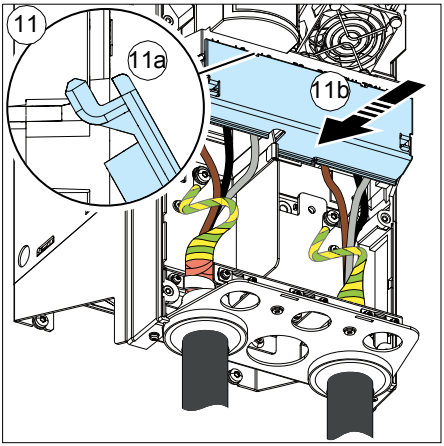

Finalization

12. Secure the cables outside the unit mechanically.
13. Ground the motor cable shield at the motor end. For minimum radio frequency interference, ground the motor cable shield 360 degrees at the lead-through of the motor terminal box.

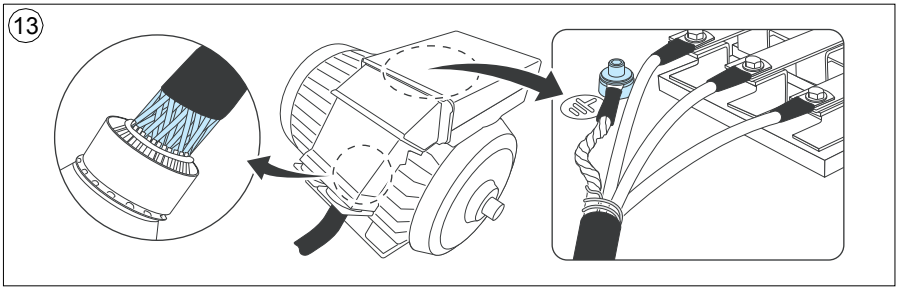

Connection procedure, frames R6…R9

WARNING! If the drive will be connected on an IT (ungrounded) system, make sure you have disconnected the EMC filter and ground-to-phase varistor. See page 75. If the drive will be connected on a corner-grounded TN system, make sure you have disconnected the EMC filter. See page 75.

1. Attach the residual voltage warning sticker in the local language next to the control board.
2. Remove the side plates of the cable box: Remove the retaining screws and slide the walls out.

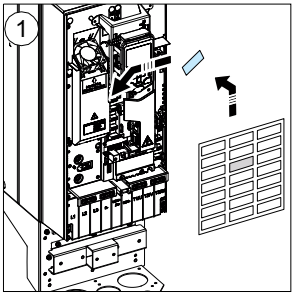

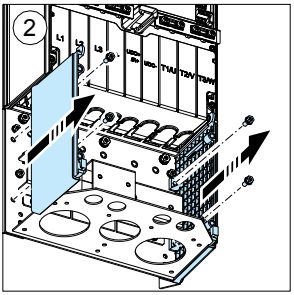

3. Remove the shroud on the power cable terminals by releasing the clips with a screwdriver and pulling the shroud out.
4. Knock out holes in the shroud for the cables to be installed.
5. Frames R8…R9: If you install parallel cables, also knock out holes in the lower shroud for the cables to be installed.

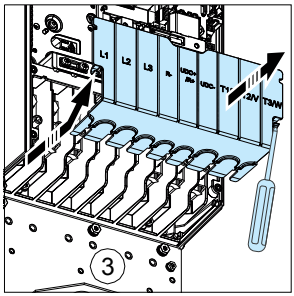

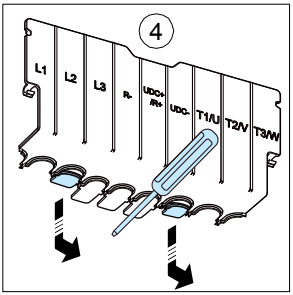

R8…R9

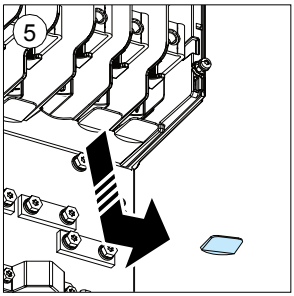

Motor cable

6. Cut an adequate hole into the rubber grommet. Slide the grommet onto the cable.
7. Prepare the ends of the input power cable and motor cable as illustrated in the figure. If you use aluminum cables, put grease to the peeled aluminum cable before connecting it to the drive. Two different motor cable types are shown in the figures (7a, 7b). **Note:** The bare shield will be grounded 360 degrees. Mark the pigtail made from the shield as a PE conductor with yellow-and-green color.

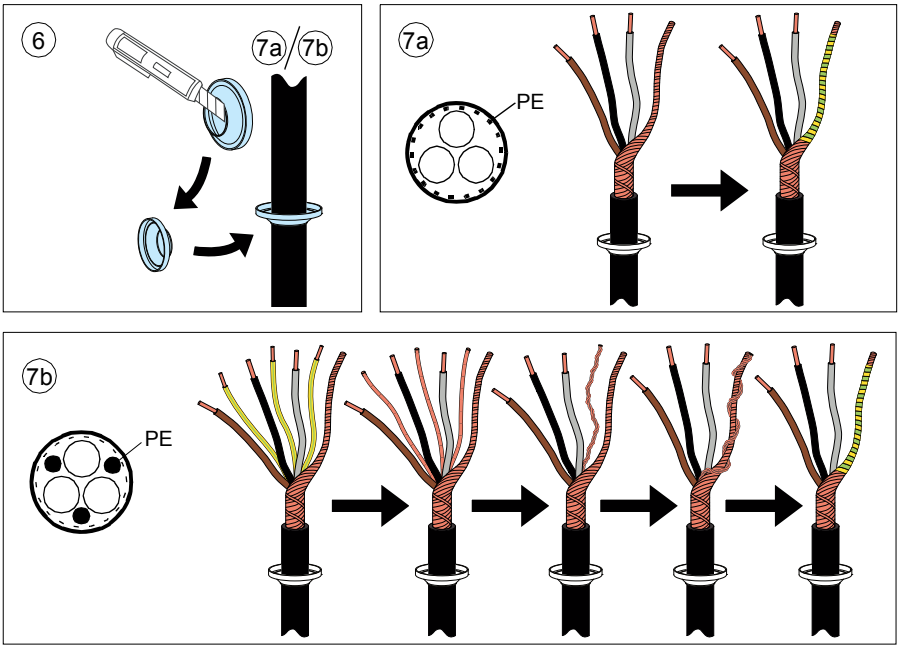

8. Slide the cables through the holes of the lead-through plate and attach the grommets to the holes (the motor cable to the right and the input power cable to the left).
9. Connect the motor cable:
   - Ground the shield 360 degrees under the grounding clamps.
   - Connect the twisted shield of the cable to the grounding terminal (9a).
   - Connect the phase conductors of the cable to terminals T1/U, T2/V and T3/W. Tighten the screws to the torque given in the figure (9b).

   Note 1 for frames R8…R9: If you connect only one conductor to the connector, we recommend that you put it under the upper pressure plate.

   Note 2 for frames R8…R9: The connectors are detachable but we do not recommend that you detach them. If you do, detach and reinstall the connectors as follows.

Input power cable

10. Connect the input power cable as in step 9. Use terminals L1, L2 and L3.

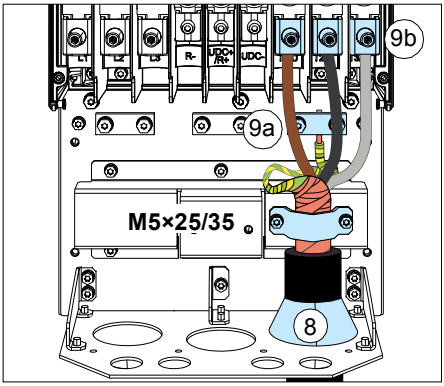

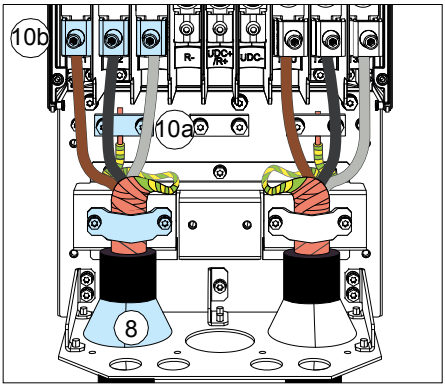

Frame size	L1, L2, L3, T1/U, T2/V, T3/W		PE, ⏚			
	N·m	lbf·ft	N·m	N·m	N·m	lbf·ft
R6	30	22.1	9.8	7.2	1.2	0.9
R7	40	29.5	9.8	7.2	1.2	0.9
R8	40	29.5	9.8	7.2	1.2	0.9
R9	70	51.6	9.8	7.2	1.2	0.9

Terminals T1/U, T2/V and T3/W

- Remove the nut that attaches the connector to its busbar.
- Put the conductor under the connector pressure plate and pre-tighten the conductor.
- Put the connector back to its busbar. Start the nut, and turn it at least two rotations by hand.

WARNING! Before using tools, make sure that the nut/screw is not cross-threading. Cross-threading will damage the drive and cause danger.

- Tighten the nut to a torque of 30 N·m (22 lbf·ft).
- Tighten the conductor(s) to 40 N·m (30 lbf·ft) for frame R8 or to 70 N·m (52 lbf·ft) for frame R9.

Terminals L1, L2 and L3

- Remove the combi screw that attaches the connector to its terminal post, and pull the connector off.
- Put the conductor under the connector pressure plate and pre-tighten the conductor.
- Put the connector back onto the terminal post. Start the combi screw, and turn it at least two rotations by hand.

WARNING! Before using tools, make sure that the nut/screw is not cross-threading. Cross-threading will damage the drive and cause danger.

- Tighten the combi screw to a torque of 30 N·m (22 lbf·ft).
- Tighten the conductor(s) to 40 N·m (30 lbf·ft) for frame R8 or to 70 N·m (52 lbf·ft) for frame R9.

11. Frames R8…R9: If you install parallel cables, install the second grounding shelf for the parallel power cables (11a). Repeat steps *6*...*11* (11b).

R8…R9

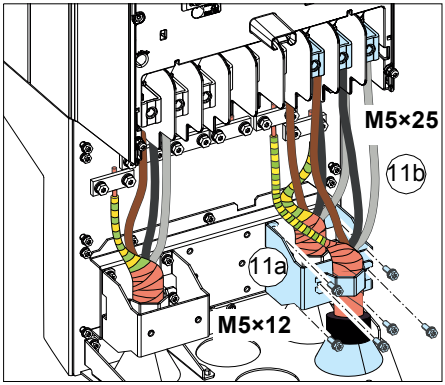

R8…R9

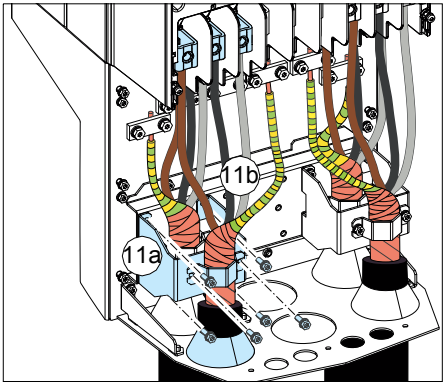

12. Install the grounding shelf of the control cables.

13. Reinstall the shroud on the power terminals.
14. Secure the cables outside the unit mechanically.

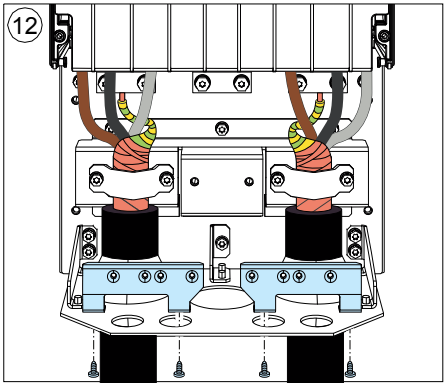

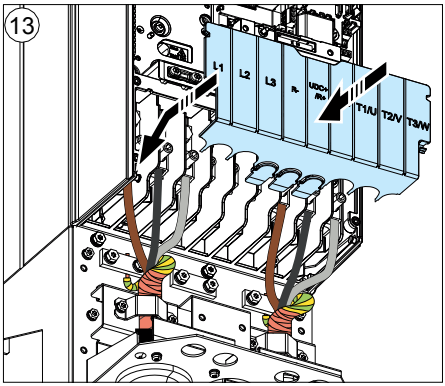

15. Ground the motor cable shield at the motor end. For minimum radio frequency interference, ground the motor cable shield 360 degrees at the lead-through of the motor terminal box.

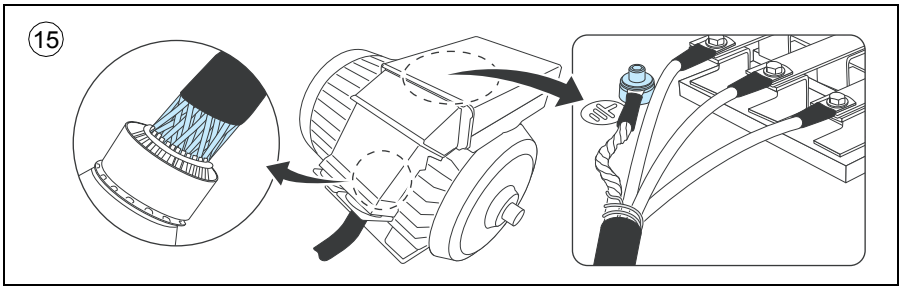

DC connection

The UDC+ and UDC- terminals (as standard in frames R4…R9) are for using external brake chopper units.

Connecting the control cables

See section *Default I/O connection diagram (HVAC default configuration)* on page *102* for the default I/O connections of the HVAC default configuration.

Connect the cables as described under *Control cable connection procedure R0…R9* on page *111*.

Default I/O connection diagram (HVAC default configuration)

R0…R5

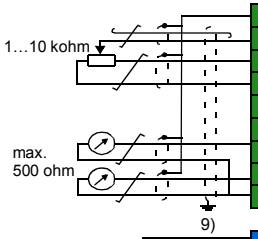

X1	Reference voltage and analog inputs and outputs	
1	SCR	Signal cable shield (screen)
2	AI1	**Output frequency/speed reference**: 0…10 V[1)]
3	AGND	Analog input circuit common
4	+10V	Reference voltage 10 V DC
5	AI2	**Actual feedback:** 0…10 V[1)]
6	AGND	Analog input circuit common
7	AO1	**Output frequency:** 0…10 V
8	AO2	**Output current:** 0…20 mA
9	AGND	Analog output circuit common

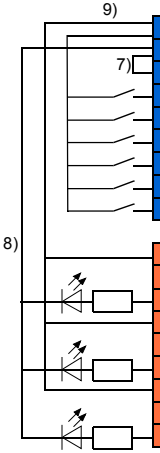

X2 & X3	Aux. voltage output and programmable digital inputs	
10	+24V	Aux. voltage output +24 V DC, max. 250 mA[3)]
11	DGND	Aux. voltage output common
12	DCOM	Digital input common for all
13	DI1	**Stop (0) / Start (1)**
14	DI2	Not configured
15	DI3	**Constant frequency/speed selection**[5)]
16	DI4	Not configured
17	DI5	Not configured
18	DI6	Not configured

X6, X7, X8	Relay outputs	
19	RO1C	**Ready run** 250 V AC / 30 V DC 2 A
20	RO1A	
21	RO1B	
22	RO2C	**Running** 250 V AC / 30 V DC 2 A
23	RO2A	
24	RO2B	
25	RO3C	**Fault (-1)** 250 V AC / 30 V DC 2 A
26	RO3A	
27	RO3B	

X5	Embedded fieldbus	
29	B+	Embedded fieldbus, EFB (EIA-485)
30	A-	
31	DGND	
S4	TERM	Termination switch
S5	BIAS	Bias resistors switch

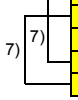

X4	Safe torque off	
34	OUT1	Safe torque off. Factory connection. Both circuits must be closed for the drive to start. See chapter *Safe torque off function* on page *215*.
35	OUT2	
36	SGND	
37	IN1	
38	IN2	

See the notes on page *104*.

Total load capacity of the Auxiliary voltage output +24V (X2:10) is 6.0 W (250 mA / 24 V DC).

Wire sizes:

0.2…2.5 mm^2 (24…14 AWG): Terminals +24V, DGND, DCOM, B+, A-, DGND, Ext. 24V

0.14…1.5 mm^2 (26…16 AWG): Terminals DI, AI, AO, AGND, RO, STO

Tightening torques: 0.5…0.6 N·m (0.4 lbf·ft)

R6…R9

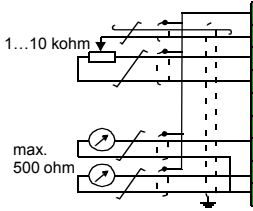

X1	Reference voltage and analog inputs and outputs	
1	SCR	Signal cable shield (screen)
2	AI1	**Output frequency/speed reference**: 0…10 V[1)]
3	AGND	Analog input circuit common
4	+10V	Reference voltage 10 V DC
5	AI2	**Actual feedback:** 0…10 V[1)]
6	AGND	Analog input circuit common
7	AO1	**Output frequency:** 0…10 V
8	AO2	**Output current:** 0…20 mA
9	AGND	Analog output circuit common

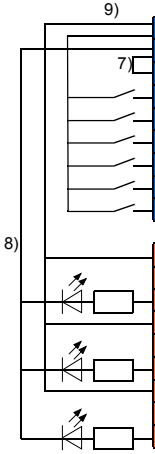

X2 & X3	Aux. voltage output and programmable digital inputs	
10	+24V	Aux. voltage output +24 V DC, max. 250 mA[3)]
11	DGND	Aux. voltage output common
12	DCOM	Digital input common for all
13	DI1	**Stop (0) / Start (1)**
14	DI2	Not configured
15	DI3	**Constant frequency/speed selection**[5)]
16	DI4	Not configured
17	DI5	Not configured
18	DI6	Not configured

X6, X7, X8	Relay outputs	
19	RO1C	**Ready run** 250 V AC / 30 V DC 2 A
20	RO1A	
21	RO1B	
22	RO2C	**Running** 250 V AC / 30 V DC 2 A
23	RO2A	
24	RO2B	
25	RO3C	**Fault (-1)** 250 V AC / 30 V DC 2 A
26	RO3A	
27	RO3B	

X5	Embedded fieldbus	
29	B+	Embedded fieldbus, EFB (EIA-485)
30	A-	
31	DGND	
S4	TERM	Termination switch
S5	BIAS	Bias resistors switch

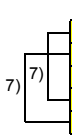

X4	Safe torque off	
34	OUT1	Safe torque off. Factory connection. Both circuits must be closed for the drive to start. See chapter *Safe torque off function* on page *215*.
35	OUT2	
36	SGND	
37	IN1	
38	IN2	

X10	24 V AC/DC	
40	24 V AC/DC+ in	Ext. 24V AC/DC input to power up the control unit when the main supply is disconnected.
41	24 V AC/DC- in	

See the notes on page *104*.

Total load capacity of the Auxiliary voltage output +24V (X2:10) is 6.0 W (250 mA / 24 V DC).

Wire sizes: 0.14…2.5 mm^2 (26…16 AWG): All terminals

Tightening torques: 0.5…0.6 N·m (0.4 lbf·ft)

Notes:

1) Current [0(4)…20 mA, R_{in} = 100 ohm] or voltage [0(2)…10 V, R_{in} > 200 kohm]. Change of setting requires changing the corresponding parameter.

3) Total load capacity of the Auxiliary voltage output +24V (X2:10) is 6.0 W (250 mA / 24 V) minus the power taken by the option modules installed on the board.

5) In scalar control: See **Menu - Primary settings** - **Drive** - **Constant frequencies** or parameter group 28 Frequency reference chain.
In vector control: See **Menu - Primary setting - Drive** - **Constant speeds** or parameter group 22 Speed reference selection.

DI3	Operation/Parameter	
	Scalar control (default)	**Vector control**
0	Set frequency through AI1	Set speed through AI1
1	28.26 Constant frequency 1	22.26 Constant speed 1

7) Connected with jumpers at the factory.

8) **Note:** Use shielded twisted-pair cables for digital signals.

9) Ground the outer shield of the cable 360 degrees under the grounding clamp on the grounding shelf for the control cables.

Further information on the usage of the connectors and switches is given in the sections below. See also section *Control connection data* on page *169*.

Switches

Switch	Description	Position	
S4 (TERM)	EFB link termination. Must be set to the terminated (ON) position when the drive is the first or last unit on the link.	ON TERM	Bus not terminated (**default**)
		ON TERM	Bus terminated
S5 (BIAS)	Switches on the biasing voltages to the bus. One (and only one) device, preferably at the end of the bus must have the bias on.	ON BIAS	Bias off (**default**)
		ON BIAS	Bias on

PNP configuration for digital inputs

Internal and external +24 V power supply connections for PNP configuration are shown in the figure below.

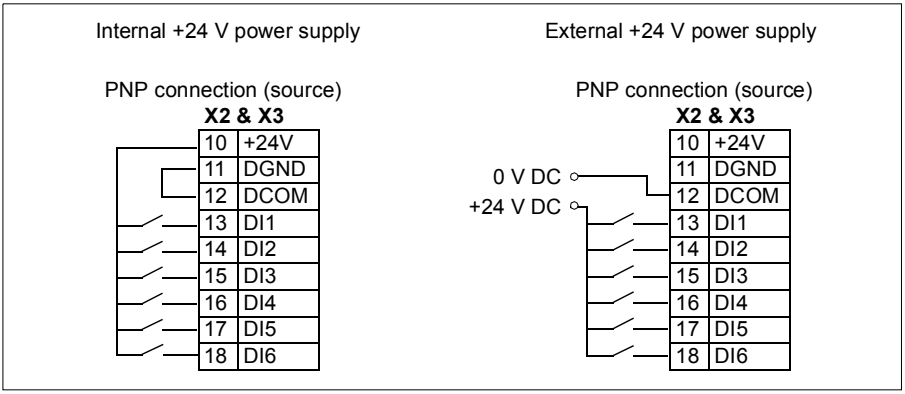

WARNING! Do not connect the +24 V AC cable to the control board ground when the control board is powered using an external 24 V AC supply.

NPN configuration for digital inputs

Internal and external +24 V power supply connections for NPN configuration are shown in the figure below.

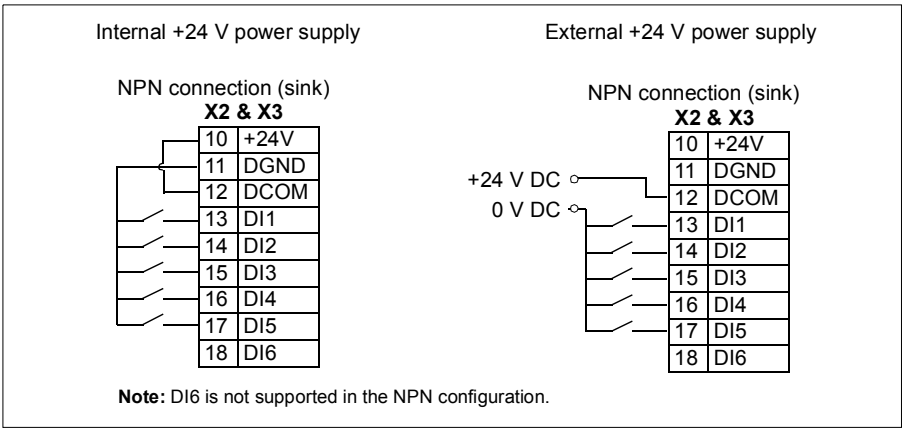

WARNING! Do not connect the +24 V AC cable to the control board ground when the control board is powered using an external 24 V AC supply.

Connection for obtaining 0…10 V from analog output 2 (AO2)

To obtain 0…10 V from analog output AO2, connect a 500 ohm resistor (or two 1 kohm resistors in parallel) between the analog output 2 AO2 and analog common ground AGND.

Examples are shown in the figure below.

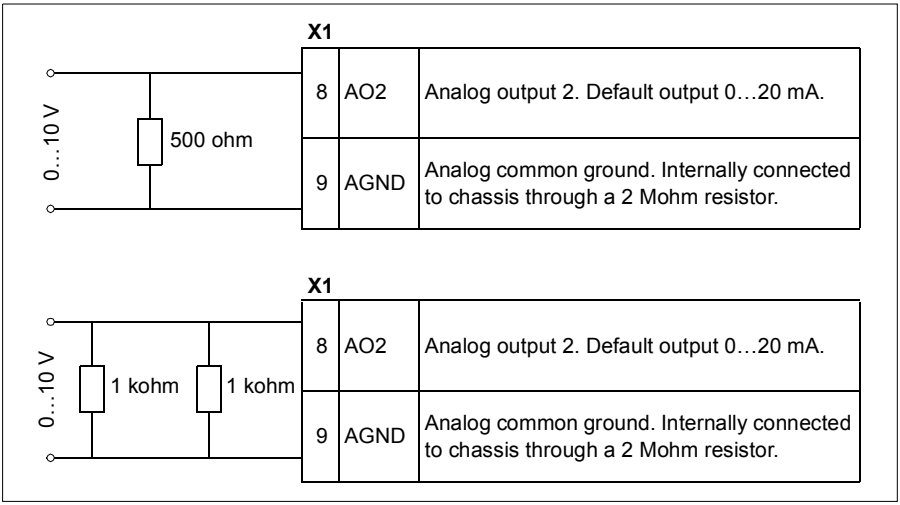

Connection examples of two-wire and three-wire sensors

Note: Maximum capability of the auxiliary 24 V DC (250 mA) output must not be exceeded.

Two-wire sensor/transmitter

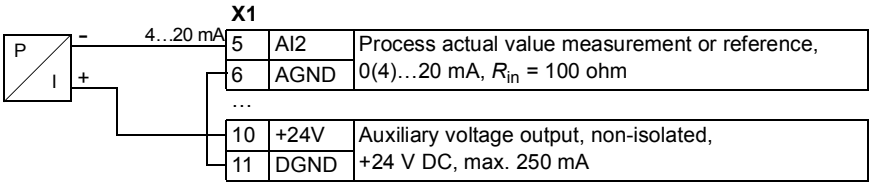

Note: The sensor is supplied through its current output and the drive feeds the supply voltage (+24 V DC). Thus the output signal must be 4…20 mA, not 0…20 mA.

Three-wire sensor/transmitter

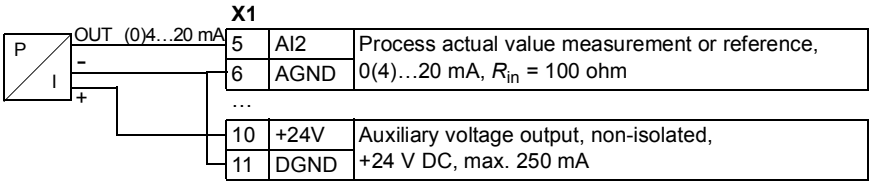

DI5 as frequency input

For setting the parameters for the digital frequency input, see *ACH580 HVAC control program firmware manual* (3AXD50000027537 [English]).

DI6 as PTC input

If DI6 is used as a PTC input, see *ACH580 HVAC control program firmware manual* (3AXD50000027537 [English]) for how to set parameters accordingly.

Note: If DI6 is used as PTC input, the wiring and the PTC sensor need to be double isolated. Otherwise the CMOD-02 I/O extension module must be used.

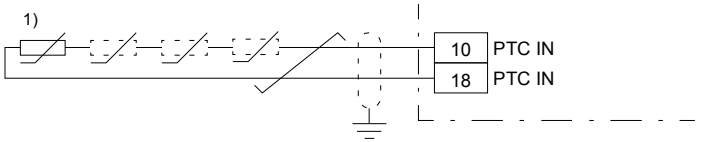

1) One to six PTC thermistors connected in series.

AI1 and AI2 as Pt100, Pt1000, Ni1000, KTY83 and KTY84 sensor inputs (X1)

One, two or three Pt100 sensors; one, two or three Pt1000 sensors; or one Ni1000, KTY83 or KTY84 sensor for motor temperature measurement can be connected between an analog input and output as shown below. Do not connect both ends of the cable shields directly to ground. If a capacitor cannot be used at one end, leave that end of the shield unconnected.

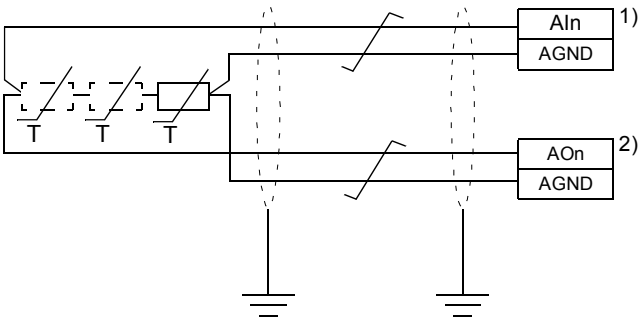

1) Select the input type to voltage for analog input AI1 or AI2 with parameters. Set the appropriate analog input unit to V (volt) in parameter group 12 Standard AI.
2) Select the excitation mode in parameter group 13 Standard AO.

WARNING! As the inputs pictured above are not insulated according to IEC 60664, the connection of the motor temperature sensor requires double or reinforced insulation between motor live parts and the sensor. If the assembly does not fulfill the requirement, the I/O board terminals must be protected against contact and must not be connected to other equipment or the temperature sensor must be isolated from the I/O terminals.

Safe torque off (X4)

For the drive to start, both connections (+24 V DC to IN1 and +24 V DC to IN2) must be closed. By default, the terminal block has jumpers to close the circuit. Remove the jumpers before connecting an external Safe torque off circuitry to the drive. See chapter *Safe torque off function* on page *215*.

Note: Only 24 V DC can be used for STO. Only PNP input configuration can be used.

Control cable connection procedure R0…R9

WARNING! Obey the instructions in chapter *Safety instructions* on page *13*. If you ignore them, injury or death, or damage to the equipment can occur.

1. Stop the drive and do the steps in section *Precautions before electrical work* on page *16* before you start the work.
2. Remove the front cover(s) if not already removed. See page *81* (R0…R4), page *90* (R5) or page *57* (R6…R9).

Analog signals
The figures for frames R0…R2 and R3 (page *113*), R4 (page *114*), R5 (page *115*) and R6…R9 (page *116*) show an example of connecting a cable. Make the connections according to the default configuration.

3. Cut an adequate hole into the rubber grommet and slide the grommet onto the cable. Slide the cable through a hole in the lead-through plate and attach the grommet to the hole.
4. Ground the outer shield of the cable 360 degrees under the grounding clamp. Keep the cable unstripped as close to the terminals of the control board as possible.
   Frames R5…R9: Secure the cables mechanically at the clamps below the control board.
   Ground also the pair-cable shields and grounding wire at the SCR terminal.
5. Route the cable as shown in the figures on pages *113* (R0…R2 and R3) *114* (R4),*115* (R5) or *116* (R6…R9).
6. Connect the conductors to the appropriate terminals of the control board and tighten to 0.5…0.6 N·m (0.4 lbf·ft).

Digital signals
The figures for frames R0…R2 and R3 (page *113*)), R4 (page *114*), R5 (page *115*) and R6…R9 (page *116*) show an example of connecting a cable. Make the connections according to the default configuration.

7. Cut an adequate hole into the rubber grommet and slide the grommet onto the cable. Slide the cable through the hole in the lead-through plate and attach the grommet to the hole.
8. Ground the outer shield of the cable 360 degrees under the grounding clamp. Keep the cable unstripped as close to the terminals of the control board as possible.
   Frames R5…R9: Secure the cables mechanically at the clamps below the control board.
   If you use double-shielded cables, ground also the pair-cable shields and grounding wire at the SCR terminal.

9. Route the cable as shown in the figures on pages *113* (R0…R2 and R3) *114* (R4),*115* (R5) or *116* (R6…R9).
10. Connect the conductors to the appropriate terminals of the control board and tighten to 0.5…0.6 N·m (0.4 lbf·ft).
11. Tie all control cables to the provided cable tie mounts.

Note:

- Leave the other ends of the control cable shields unconnected or ground them indirectly via a high-frequency capacitor with a few nanofarads, eg, 3.3 nF / 630 V. The shield can also be grounded directly at both ends if they are *in the same ground line* with no significant voltage drop between the end points.
- Keep any signal wire pairs twisted as close to the terminals as possible. Twisting the wire with its return wire reduces disturbances caused by inductive coupling.

R0…R2

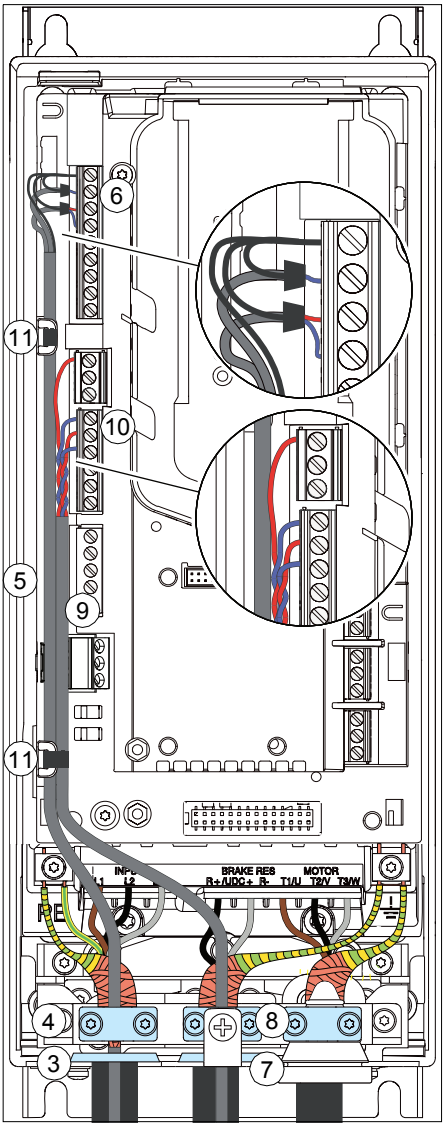

R0…R2: 0.5…0.6 N·m (0.4 lbf·ft)

R3

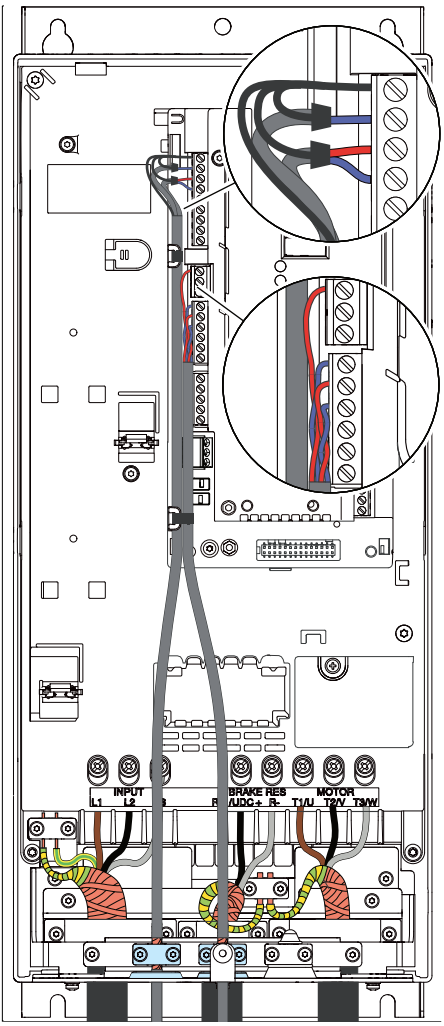

R3: 0.5…0.6 N·m (0.4 lbf·ft)

R4

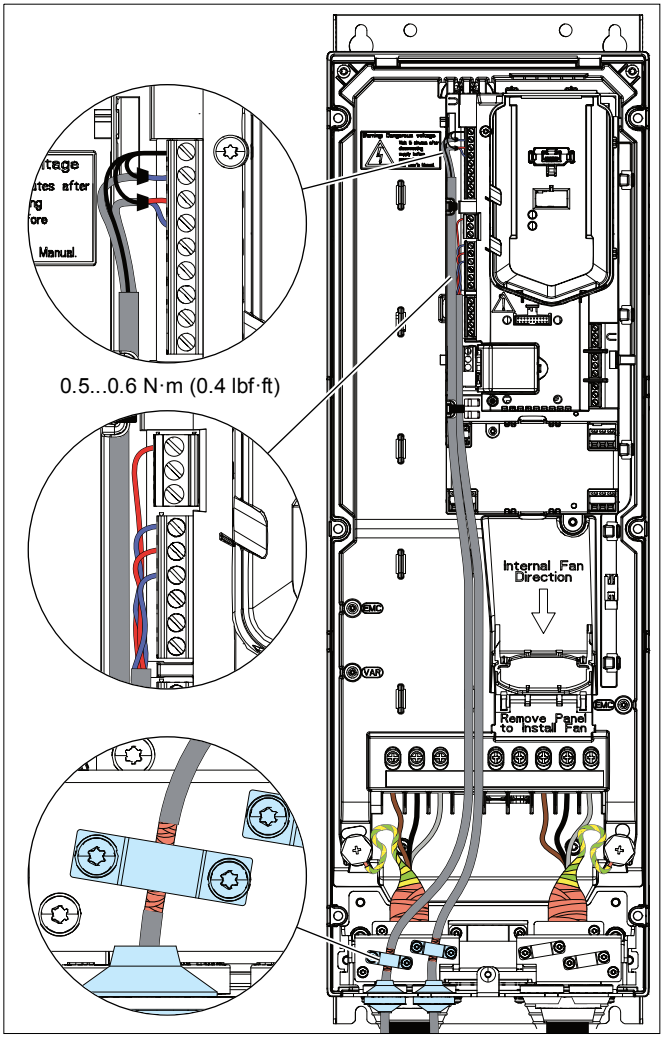
0.5...0.6 N·m (0.4 lbf·ft)
Internal Fan Direction
Remove Panel to Install Fan
EMC
VAR

R5

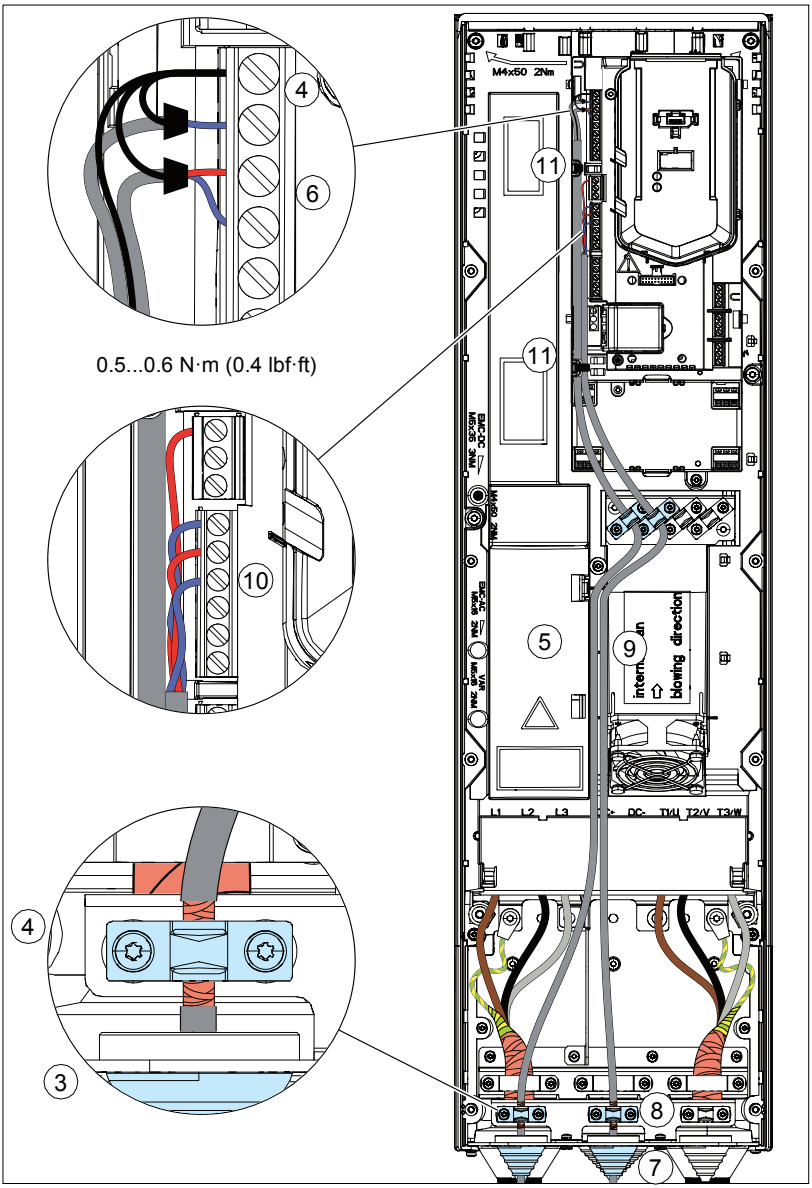
4
6
0.5...0.6 N·m (0.4 lbf·ft)
10
4
3
M4x50 2Nm
11
11
5
9
blowing direction
L1 L2 L3 DC- T1/U T2/V T3/W
8
7

R6…R9

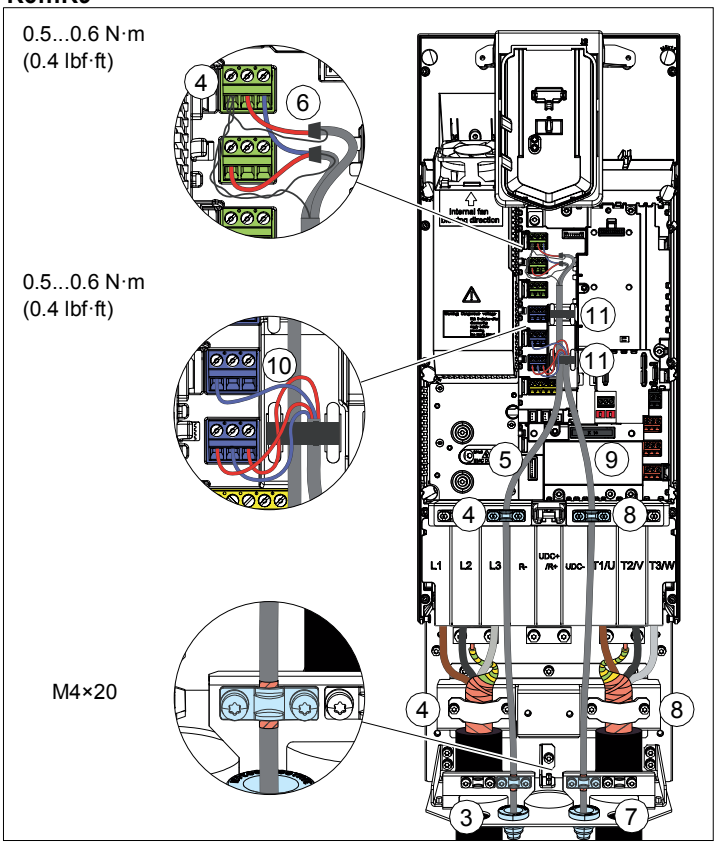
0.5...0.6 N·m
(0.4 lbf·ft)
0.5...0.6 N·m
(0.4 lbf·ft)
M4×20
4
6
10
11
11
5
9
4
8
4
8
3
7
L1
L2
L3
R-
UDC+
/R+
UDC-
T1/U
T2/V
T3/W
Internal fan
air direction

Installing option modules

Note: In US deliveries, options are already installed at the factory.

Note: If you will install the FPBA-01 module, see section *FPBA-01 PROFIBUS DP adapter module connectors* on page *65* for suitable connector types.

Mechanical installation of option modules

See section *Overview of power and control connections* page *31* for the available slots for each module. Install the option modules as follows:

WARNING! Obey the instructions in chapter *Safety instructions* on page *13*. If you ignore them, injury or death, or damage to the equipment can occur.

Note: Slot 2 in frames R0…R5 is at U_{DC} potential. You must disconnect power supplies before installing or removing an I/O extension module.

Stop the drive and do the steps in section *Precautions before electrical work* on page *16* before you start the work.

1. Remove the front cover(s) if not already removed. See page *81* (R0…R4), page *90* (R5) or page *57* (R6…R9).
2. Not for ACH580-01.

The figures for frames R0…R5 (page *118*) and R6…R9 (page *119*) show an example of installing option modules.

Option slot 2 (I/O extension modules)

3. Put the module carefully into its position on the control board.
4. Tighten the mounting screw.
5. Tighten the grounding screw (CHASSIS). **Note:** The screw grounds the module. It is necessary for fulfilling the EMC requirements and for proper operation of the module.

Note: Frames R0…R2: The module in option slot 2 covers the power terminals. Do not install a module in option slot 2 before you have installed the power cables.

Option slot 1 (fieldbus adapter modules)

6. Put the module carefully into its position on the control board.
7. Tighten the mounting screw (CHASSIS). **Note:** The screw tightens the connections and grounds the module. It is necessary for fulfilling the EMC requirements and for proper operation of the module

R0…R2

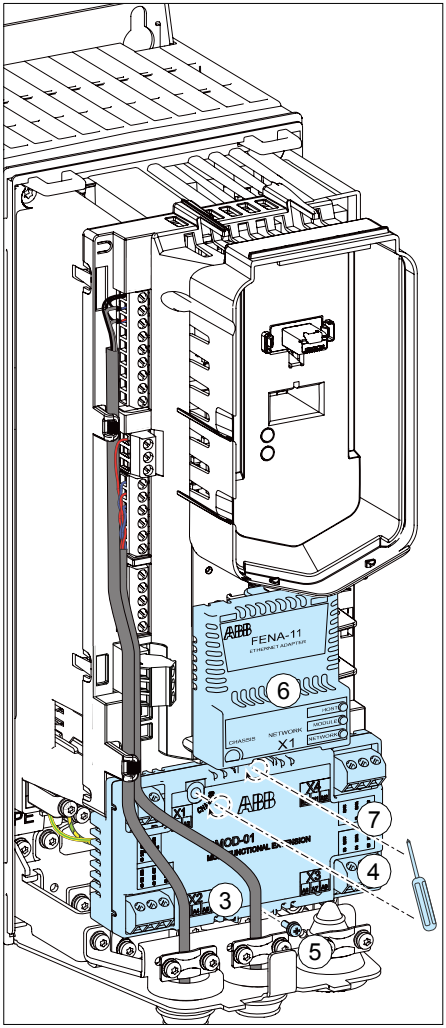
FENA-11
ETHERNET ADAPTER
NETWORK
X1
CHASSIS
MOD-01
X4
X5
X2
6
7
4
3
5

R3…R5

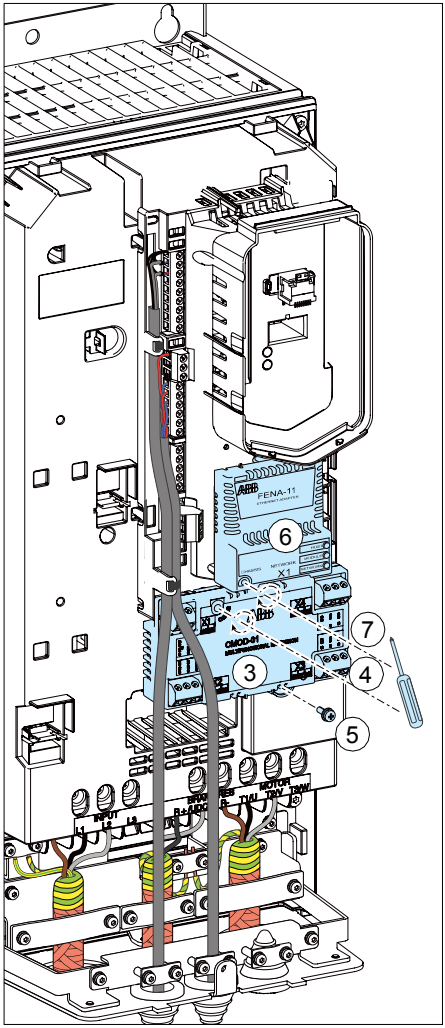
FENA-11
ETHERNET ADAPTER
NETWORK
X1
OMOD-01
INPUT
MOTOR
6
7
3
4
5

R6…R9

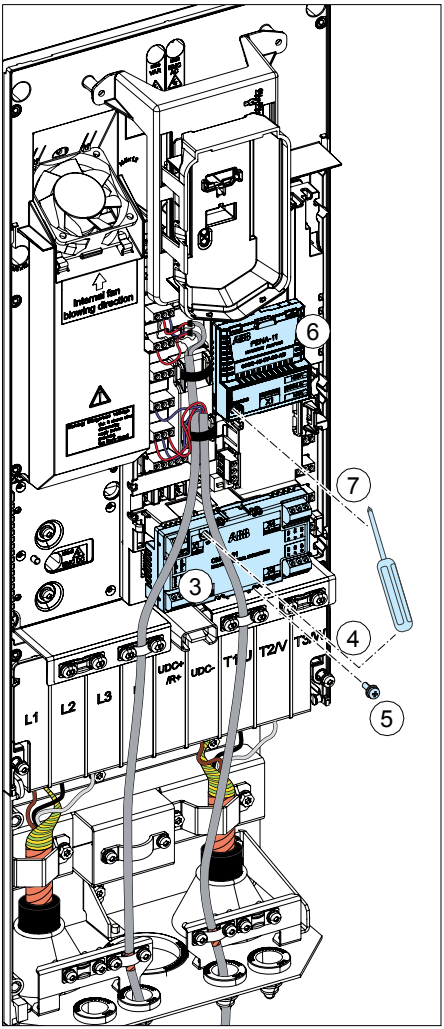

Wiring the modules

See the appropriate option module manual for specific installation and wiring instructions.

Reinstalling covers

Reinstalling cover, frames R0…R4

1. Reinstall the cover: Put the tabs on the cover top in their counterparts on the housing (1a) and the press the cover (1b).
2. Tighten the retaining screw at the bottom with a screwdriver.

IP21 (UL Type 1)

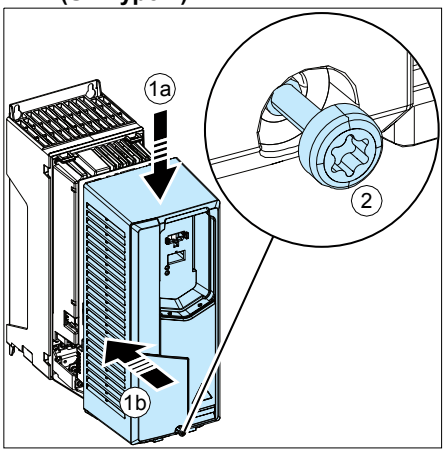

IP55 (UL Type 12), R0…R2

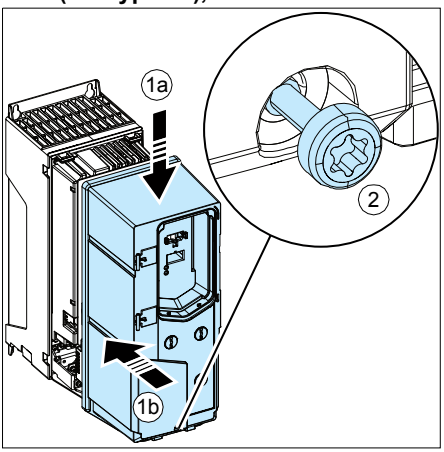

IP21 (UL Type 1), R4 and IP55 (UL Type 12), R3

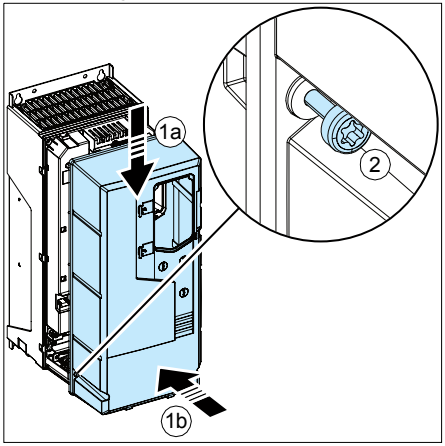

IP55 (UL Type 12) R4

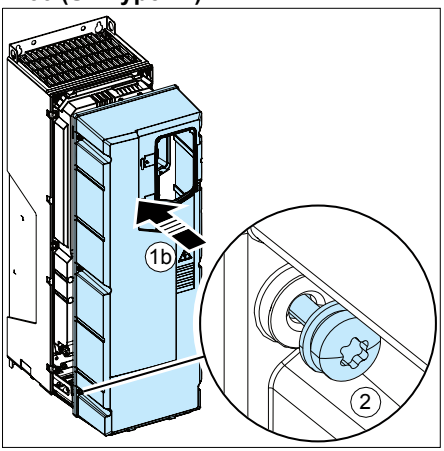

Reinstalling covers, frame R5

IP21 (UL Type 1)

1. Reinstall the box cover: Slide the cover upwards (1a) and tighten the retaining screws (1b).
2. Reinstall the module cover: Press the cover at the bottom (2a) and tighten the retaining screws (2b).

IP55 (UL Type 12)

1. Reinstall the front cover: Press the cover at the bottom (1a) and tighten the retaining screws (1b).

IP21 (UL Type 1)

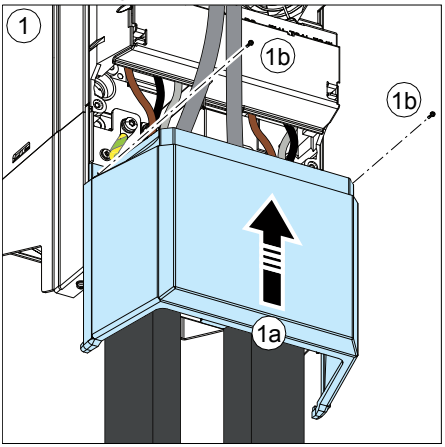

IP21 (UL Type 1)

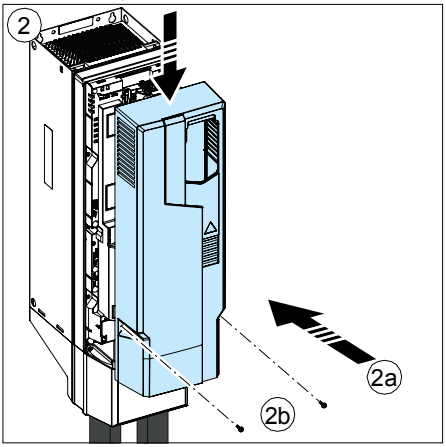

IP55 (UL Type 12)

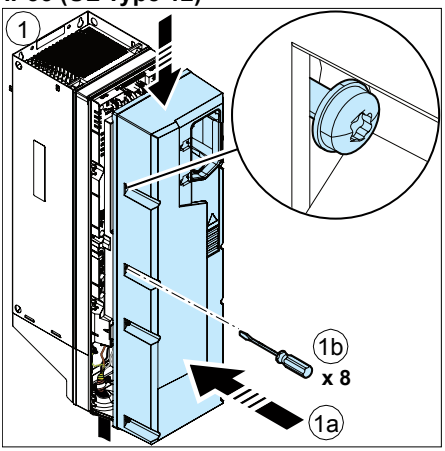

Reinstalling side plates and covers, frames R6…R9

IP21 (UL Type 1)

1. Reinstall the side plates of the cable box. Tighten the retaining screws with a screwdriver.
2. Slide the cover of the cable box on the module from below until the cover snaps into place.
3. Reinstall the module cover. Tighten the two retaining screws with a screwdriver.

IP55 (UL Type 12)

1. Reinstall the side plates of the cable box. Tighten the retaining screws with a screwdriver.

IP21 (UL Type 1)

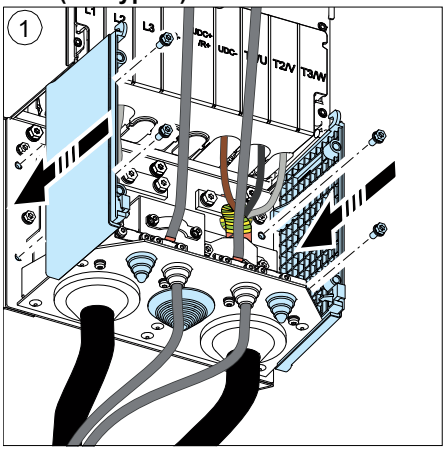

IP21 (UL Type 1)

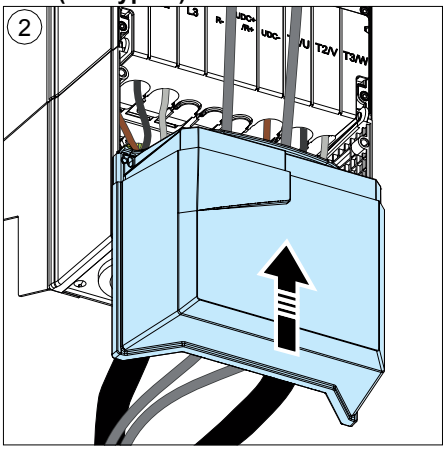

IP21 (UL Type 1)

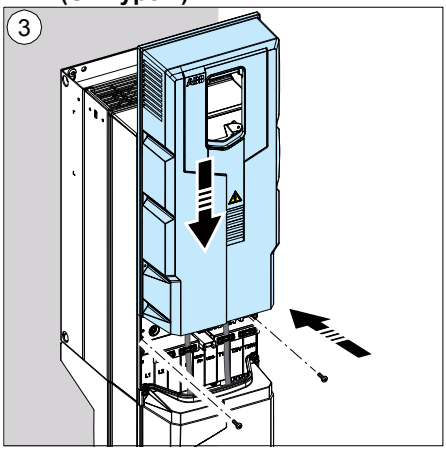

IP55 (UL Type 1)

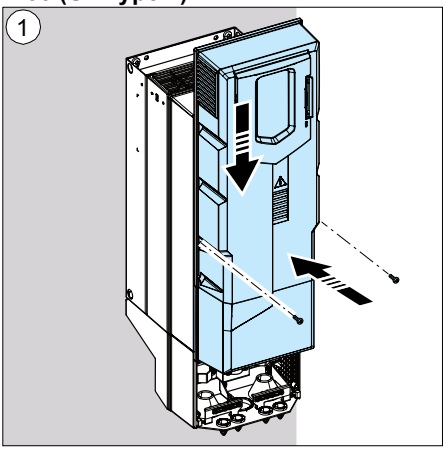

Connecting a PC

To be able to connect a PC to the drive, you need an assistant control panel (ACH-AP-H). It is also possible to use CCA-01 configuration adapter.

Connect a PC to the drive with a USB data cable (USB Type A <-> USB Type Mini-B) as follows:

1. Lift the USB connector cover from bottom upwards.
2. Put the USB cable Mini-B plug in the control panel USB connector.
3. Put the USB cable A-plug in the USB connector of the PC (3a). The panel displays text “USB connected” (3b).

Note: Panel keys cannot be used when a USB data cable is connected to the panel.

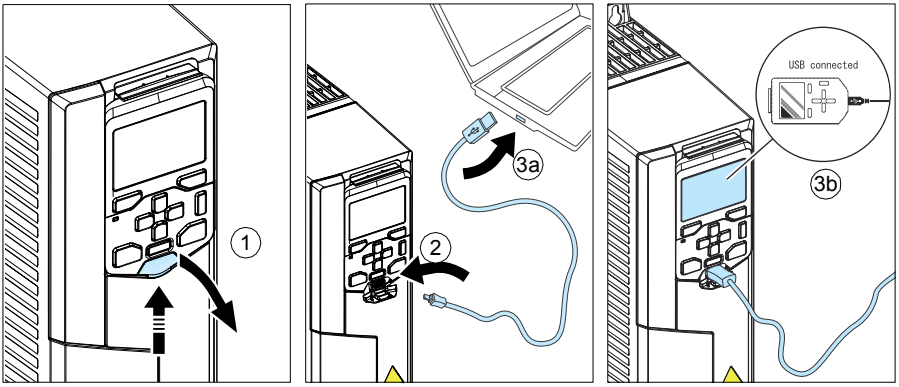

For information on using the Drive composer PC tool, see *Drive composer PC tool user's manual* (3AUA0000094606 [English]).

7

Installation checklist

Contents of this chapter

This chapter contains an installation checklist which you must complete before you start up the drive.

Warnings

WARNING! Obey the instructions in chapter *Safety instructions* on page *13*. If you ignore them, injury or death, or damage to the equipment can occur.

Checklist

Do the steps in section *Precautions before electrical work* on page *16* before you start the work. Go through the checklist together with another person.

☑	**Check that …**
☐	The ambient operating conditions meet the specification in section *Ambient conditions* on page *175*.
☐	If the drive will be connected to a corner-grounded TN system: The internal EMC filter has been disconnected. See section *Checking the compatibility with IT (ungrounded) and corner-grounded TN systems* on page *75*.
☐	If the drive will be connected to an IT (ungrounded) system: The internal EMC filter and the ground-to-phase varistor has been disconnected. See section *Checking the compatibility with IT (ungrounded) and corner-grounded TN systems* on page *75*.

☑	**Check that …**
☐	If the drive has not been powered (either in storage or unused) over one year: The electrolytic DC capacitors in the DC link of the drive have been reformed. See section *Replacing the auxiliary cooling fan, IP55 (UL Type 12) frames R0…R2* on page *135*.
☐	There is an adequately sized protective earth (ground) conductor between the drive and the switchboard.
☐	There is an adequately sized protective earth (ground) conductor between the motor and the drive.
☐	All protective earth (ground) conductors have been connected to the appropriate terminals and the terminals have been tightened (pull conductors to check).
☐	The supply voltage matches the nominal input voltage of the drive. Check the type designation label.
☐	The input power cable has been connected to appropriate terminals, the phase order is correct, and the terminals have been properly tightened. (Pull conductors to check.)
☐	Appropriate supply fuses and disconnector have been installed.
☐	The motor cable has been connected to appropriate terminals, the phase order is right, and the terminals have been tightened. (Pull conductors to check.)
☐	The brake resistor cable (if present) has been connected to appropriate terminals, and the terminals have been tightened. (Pull conductors to check.)
☐	The motor cable (and brake resistor cable, if present) has been routed away from other cables.
☐	The control cables (if any) have been connected to the control board.
☐	There are no tools, foreign objects or dust from drilling inside the drive.
☐	Drive and motor connection box covers are in place.
☐	The motor and the driven equipment are ready for start-up.

8

Maintenance and hardware diagnostics

Contents of this chapter

The chapter contains preventive maintenance instructions and LED indicator descriptions.

Maintenance intervals

The table below shows the maintenance tasks which can be done by the end user. The complete maintenance schedule is available on the Internet (www.abb.com/drivesservices). For more information, consult your local ABB Service representative (www.abb.com/searchchannels).

Maintenance and component replacement intervals are based on the assumption that the equipment is operated within the specified ratings and ambient conditions. ABB recommends annual drive inspections to ensure the highest reliability and optimum performance.

Note: Long term operation near the specified maximum ratings or ambient conditions may require shorter maintenance intervals for certain components. Consult your local ABB Service representative for additional maintenance recommendations.

Description of symbols

Action	Description
I	Visual **I**nspection and maintenance action if needed
P	**P**erformance of on/off-site work (commissioning, tests, measurements or other work)
R	**R**eplacement of component

Recommended annual maintenance actions by the user

Action	Description
P	Quality of supply voltage
I	Spare parts
P	Capacitor reforming, spare modules and spare capacitors (page *139*)
I	Tightness of terminals
I	Dustiness, corrosion or temperature
P	Heat sink cleaning (page *129*)

Recommended maintenance actions by the user

Component	Years from start-up						
	3	6	9	12	15	18	21
Cooling							
Fans, IP21 (UL Type 1) frames R0 to R9							
Main cooling fan R0…R4: page *130*, R5…R8: page *132*, R9: page *133*		R		R		R	
Auxiliary cooling fan for circuit boards, R5…R9: page *134*	R	R	R	R	R	R	R
Fans, IP55 (UL Type 12) frames R0 to R9							
Main cooling fan R0…R4: page *130*, R5…R8: page *132*, R9: page *133*		R		R		R	
Auxiliary cooling fan for circuit boards. R0…R2: page *135*, R3: page *136*, R4: page *137*, R5…R9: page *134*	R	R	R	R	R	R	R
Second auxiliary cooling fan, R8 and R9: page *138*	R	R	R	R	R	R	R
Aging							
Control panel battery (page *140*)			R			R	

4FPS10000309652.xlsx G

Heatsink

The drive heatsink fins pick up dust from the cooling air. The drive can run into overtemperature warnings and faults if the heatsink is not clean. When necessary, clean the heatsink as follows.

WARNING! Obey the instructions in chapter *Safety instructions* on page *13*. Ignoring the instructions can cause physical injury or death, or damage to the equipment.

WARNING! Use a vacuum cleaner with antistatic hose and nozzle. Using a normal vacuum cleaner creates static discharges which can damage circuit boards.

---

1. Stop the drive and disconnect it from the power line. Wait for 5 minutes and then make sure by measuring that there is no voltage. See section *Precautions before electrical work* on page *16* before you start the work.
2. Remove the cooling fan(s). See section *Fans* on page *130*.
3. Blow clean, dry and oil free compressed air from bottom to top and simultaneously use a vacuum cleaner at the air outlet to trap the dust.

   Note: If there is a risk of dust entering adjoining equipment, perform the cleaning in another room.
4. Reinstall the cooling fan(s).

Fans

See section *Maintenance intervals* on page *127* for the fan replacement interval in average operation conditions.

In a speed-controlled fan, the speed of the fan matches the cooling needs. This increases the life span of the fan.

Main fans are speed controlled. When the drive is stopped, the main fan is kept running at low speed to cool the control board. IP21 (UL Type 1) frames R5…R9 and all IP55 (UL Type 12) frames have auxiliary fans that are not speed controlled and run all the time when the control board is powered.

Replacement fans are available from the manufacturer. Do not use other than specified spare parts.

Replacing the main cooling fan, frames R0…R4

WARNING! Obey the instructions in chapter *Safety instructions* on page *13*. Ignoring the instructions can cause physical injury or death, or damage to the equipment.

1. Stop the drive and disconnect it from the power line. Wait for 5 minutes and then make sure by measuring that there is no voltage. See section *Precautions before electrical work* on page *16* before you start the work.
2. Lever the fan assembly off the drive frame with for example a screwdriver (2a) and pull out the fan assembly (2b).

R0

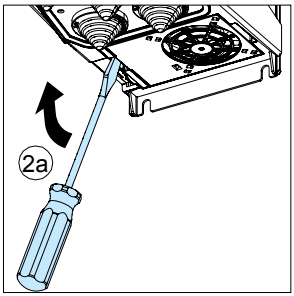

R1…R2

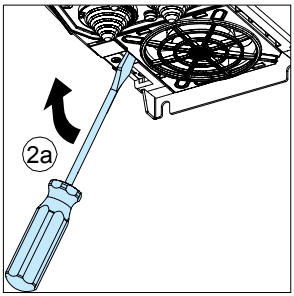

R3

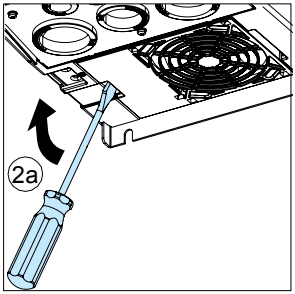

R4

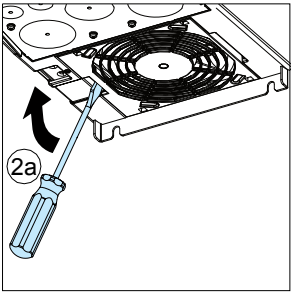

R0

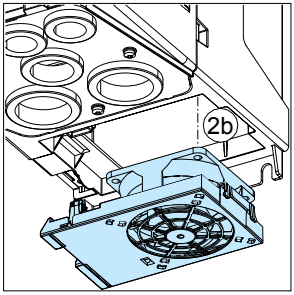

R1…R2

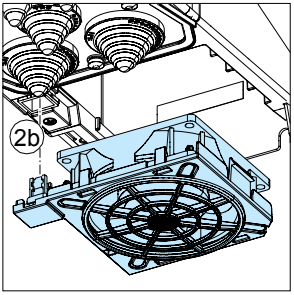

R3

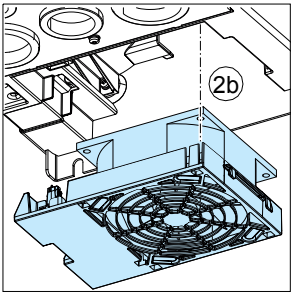

R4

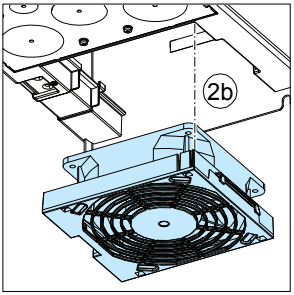

3. Install the fan assembly in reverse order.

Replacing the main cooling fan, frames R5…R8

WARNING! Obey the instructions in chapter *Safety instructions* on page *13*. Ignoring the instructions can cause physical injury or death, or damage to the equipment.

1. Stop the drive and disconnect it from the power line. Wait for 5 minutes and then make sure by measuring that there is no voltage. See section *Precautions before electrical work* on page *16* before you start the work.
2. Remove the two mounting screws of the fan mounting plate at the bottom of the drive.
3. Pull the fan mounting plate down from the side edge.
4. Unplug the fan power supply wires from the drive.
5. Lift the fan mounting plate off.
6. Remove the fan from the mounting plate.
7. Install the new fan in reverse order.

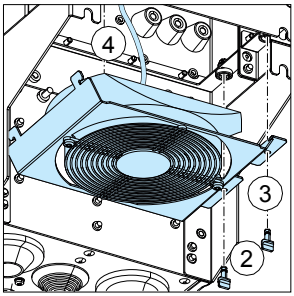

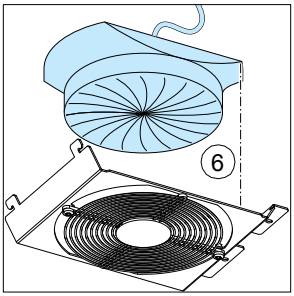

Replacing the main cooling fans, frame R9

WARNING! Obey the instructions in chapter *Safety instructions* on page *13*. Ignoring the instructions can cause physical injury or death, or damage to the equipment.

1. Stop the drive and disconnect it from the power line. Wait for 5 minutes and then make sure by measuring that there is no voltage. See section *Precautions before electrical work* on page *16* before you start the work.
2. Remove the two mounting screws of the fan mounting plate.
3. Turn the mounting plate downwards.
4. Unplug the fan power supply wires from the drive.
5. Remove the fan mounting plate.
6. Remove the fans by removing the two mounting screws.
7. Install the new fans in reverse order.

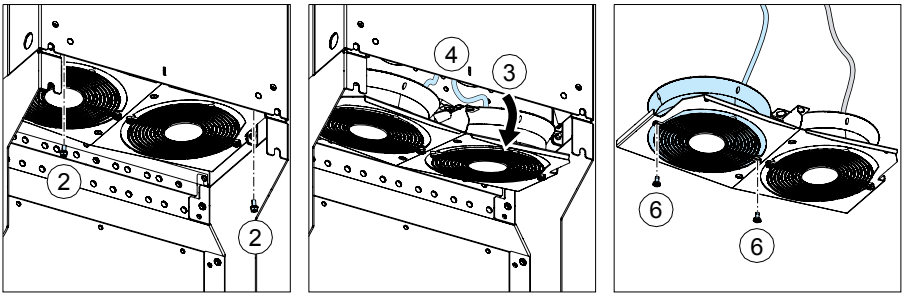

Replacing the auxiliary cooling fan, frames R5…R9

WARNING! Obey the instructions in chapter *Safety instructions* on page *13*. Ignoring the instructions can cause physical injury or death, or damage to the equipment.

1. Stop the drive and disconnect it from the power line. Wait for 5 minutes and then make sure by measuring that there is no voltage. See section *Precautions before electrical work* on page *16* before you start the work.
2. Remove the front cover (see page *57*).
3. Unplug fan power supply wires from the drive.
4. Release the retaining clips.
5. Lift the fan off.
6. Install the new fan in reverse order.
   Note: Make sure that the arrow on the fan points up.

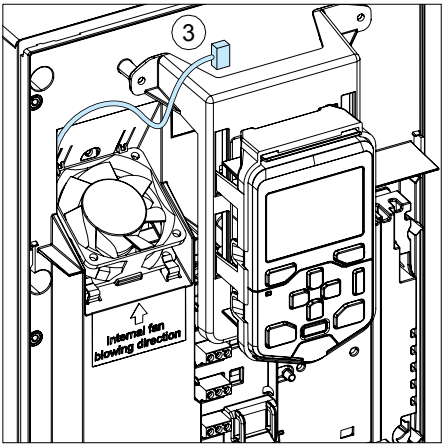

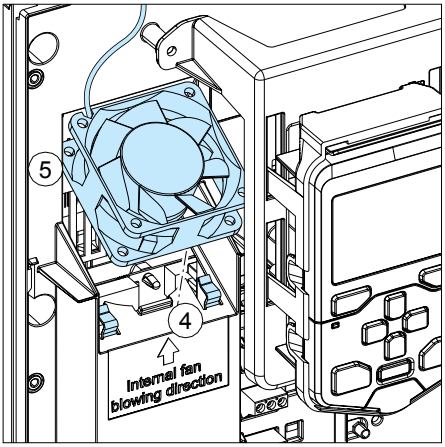

Replacing the auxiliary cooling fan, IP55 (UL Type 12) frames R0…R2

WARNING! Obey the instructions in chapter *Safety instructions* on page *13*. Ignoring the instructions can cause physical injury or death, or damage to the equipment.

1. Stop the drive and disconnect it from the power line. Wait for 5 minutes and then make sure by measuring that there is no voltage. See section *Precautions before electrical work* on page *16* before you start the work.
2. Remove the control panel: Press the retaining clip at the top (2a) and pull it forward from the top edge (2b).
3. Remove the front cover: Loosen the retaining screw with a screwdriver (3a) and lift the cover from the bottom outwards (3b) and then up (3c).
4. Unplug the fan power supply wires from the drive.
5. Pull off the fan assembly.
6. Install the new fan assembly in reverse order.

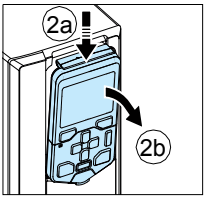

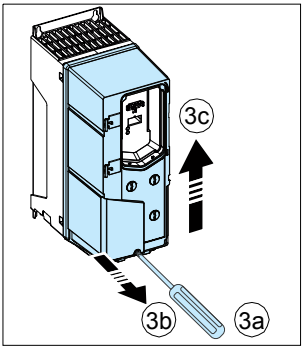

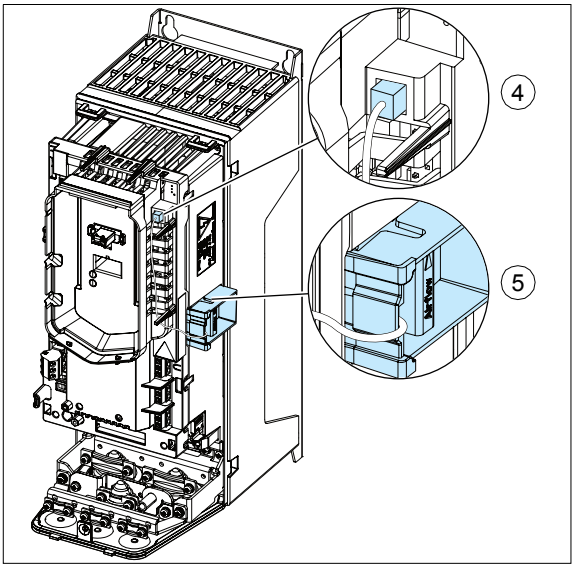

Replacing the auxiliary cooling fan, IP55 (UL Type 12) frames R3

WARNING! Obey the instructions in chapter *Safety instructions* on page *13*. Ignoring the instructions can cause physical injury or death, or damage to the equipment.

1. Stop the drive and disconnect it from the power line. Wait for 5 minutes and then make sure by measuring that there is no voltage. See section *Precautions before electrical work* on page *16* before you start the work.
2. Remove the control panel: Press the retaining clip at the top (2a) and pull it forward from the top edge (2b).
3. Remove the front cover: Loosen the retaining screw with a screwdriver (3a) and lift the cover from the bottom outwards (3b) and then up (3c).
4. Unplug the fan power supply wires from the drive.
5. Detach the fan cable from the holders.
6. Pull off the plastic housing.
7. Pull off the fan.
8. Install the new fan and housing in reverse order.
   Note: Make sure that the arrow on the fan points up.

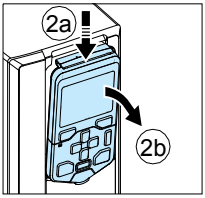

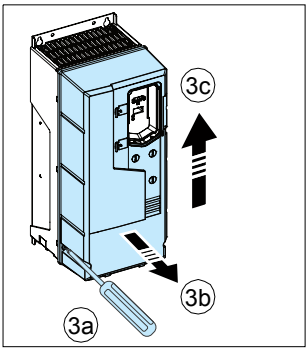

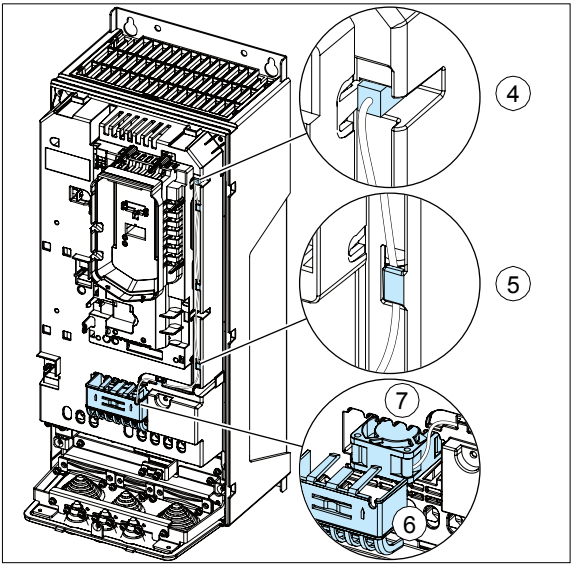

Replacing the auxiliary cooling fan, IP55 (UL Type 12) frames R4

WARNING! Obey the instructions in chapter *Safety instructions* on page *13*. Ignoring the instructions can cause physical injury or death, or damage to the equipment.

1. Stop the drive and disconnect it from the power line. Wait for 5 minutes and then make sure by measuring that there is no voltage. See section *Precautions before electrical work* on page *16* before you start the work.
2. Remove the control panel: Press the retaining clip at the top (2a) and pull it forward from the top edge (2b).
3. Remove the front cover: Loosen the retaining screws (R4: 6 pieces, R5: 8 pieces) with a screwdriver (3a) and lift the cover from the bottom outwards (3b) and then up (3c).
4. Unplug the fan power supply wires from the drive.
5. Detach the fan cable from the clips.
6. Pull the fan off.
7. Install the new fan in reverse order.
   Note: Make sure that the arrow on the fan points down.

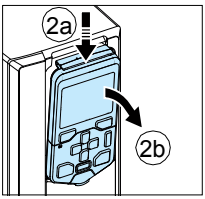

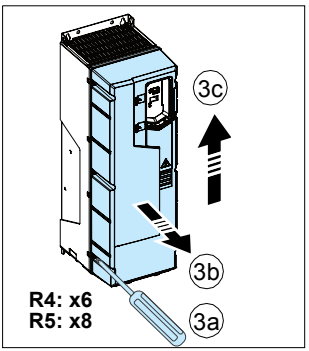

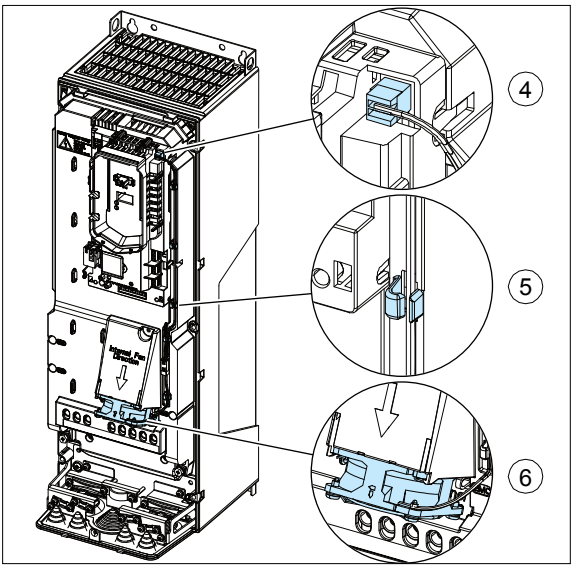

Replacing the auxiliary cooling fan, IP55 (UL Type 12) frames R8…R9

WARNING! Obey the instructions in chapter *Safety instructions* on page *13*. Ignoring the instructions can cause physical injury or death, or damage to the equipment.

1. Stop the drive and disconnect it from the power line. Wait for 5 minutes and then make sure by measuring that there is no voltage. See section *Precautions before electrical work* on page *16* before you start the work.
2. Remove the front cover: Loosen the retaining screws (14 pieces) with a screwdriver (2a) and lift the cover from the bottom outwards (2b) and then up (2c).
3. Remove the lower cover panel from the cover.
4. Unplug the fan power supply wires from the connector on the other side of the IP55 (UL Type 12) front cover.
5. Remove the retaining screws (5a) and pull off the fan (5b).
6. Install the new fan in reverse order.
   Note: Make sure that the arrow on the fan points up.

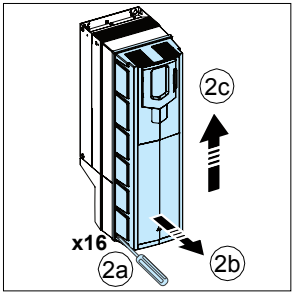

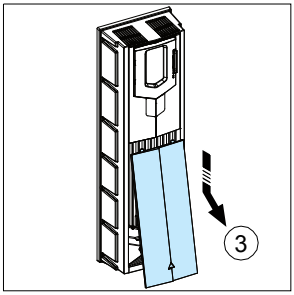

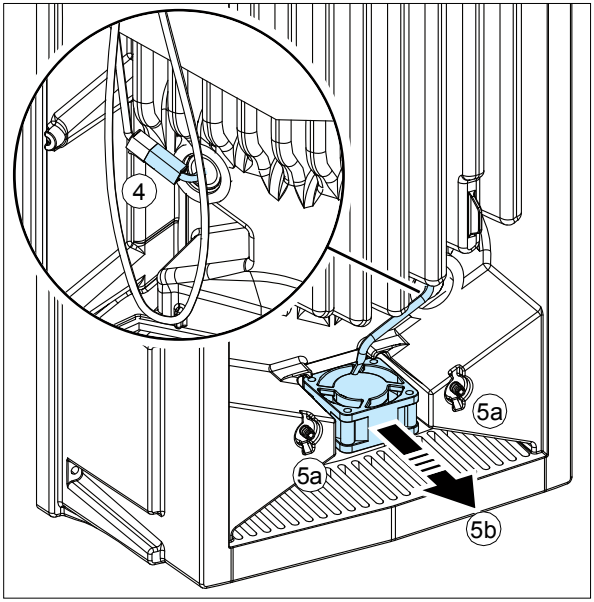

Capacitors

The drive intermediate DC circuit employs several electrolytic capacitors. Their lifespan depends on the operating time of the drive, loading and ambient temperature. Capacitor life can be prolonged by lowering the ambient temperature.

Capacitor failure is usually followed by damage to the drive and an input cable fuse failure, or a fault trip. Contact the manufacturer if capacitor failure is suspected. Replacements are available from the manufacturer. Do not use other than specified spare parts.

Reforming the capacitors

The capacitors must be reformed if the drive has not been powered (either in storage or unused) for a year or more. See section *Type designation label* on page *35* for how to find out the manufacturing date from the serial number.

For information on reforming the capacitors, see *Converter module capacitor reforming instructions* (3BFE64059629 [English]), available on the Internet (go to http://www.abb.com and enter the document code in the Search field).

Control panel

Cleaning the control panel

Use a soft damp cloth to clean the control panel. Avoid harsh cleaners which could scratch the display window.

Replacing the battery in the control panel

A battery is used in all control panels to keep the clock operating in memory during power interruptions.

The expected life for the battery is greater than ten years.

Note: The battery is NOT required for any control panel or drive functions, except the clock.

1. Remove the control panel from the drive. See section *Control panel* on page *34*.
2. To remove the battery, use a coin to rotate the battery cover on the back of the control panel.
3. Replace the battery with type CR2032. Dispose the old battery according to local disposal rules or applicable laws.

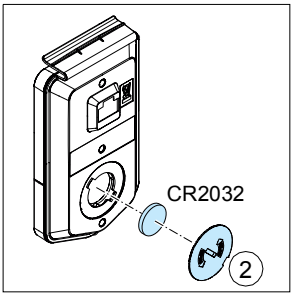

LEDs

Drive LEDs

There is a green POWER and a red FAULT LED on the front of the drive. They are visible through the panel cover but invisible if a control panel is attached to the drive. The table below describes the drive LED indications.

Drive LEDs POWER and FAULT, on the front of the drive, under the control panel / panel cover If a control panel is attached to the drive, switch to remote control (otherwise a fault will be generated), and then remove the panel to be able to see the LEDs				
LEDs off	**LED lit and steady**		**LED blinking**	
No power	Green (POWER)	Power supply on the board OK	Green (POWER)	Blinking: Drive in an alarm state Blinking for one second: Drive selected on the control panel when multiple drives are connected to the same panel bus.
	Red (FAULT)	Active fault in the drive. To reset the fault, press RESET from the control panel or switch off the drive power.	Red (FAULT)	Active fault in the drive. To reset the fault, switch off the drive power.

Control panel LEDs

The control panel has one LED. The table below describes the control panel LED indications. For more information see A*CS-AP-x assistant control panels user's manual* (3AUA0000085685 [English]).

Control panel LED, at the left edge of the control panel				
LED off	**LED lit and steady**		**LED blinking/flickering**	
Panel has no power.	Green	Drive functioning normally. Connection between the drive and control panel may be faulty or lost, or the panel and drive may be incompatible. Check the control panel display.	Green	Blinking: Active warning in the drive Flickering: Data transferred between the PC tool and drive through the USB connection of the control panel
	Red	Check the display to see where the fault is. • Active fault in the drive. Reset the fault. • Active fault in another drive in the panel bus. Switch to the drive in question and check and reset the fault.	Red	Active fault in the drive. To reset the fault, cycle the drive power.

9

Technical data

Contents of this chapter

The chapter contains the technical specifications of the drive, for example ratings, sizes and technical requirements as well as provisions for fulfilling the requirements for CE, UL and other approval marks.

Ratings

IEC ratings

Type ACH580 -01-	Input rating	Max. current	Output ratings		Heat dissipation	Air flow	Frame size
			Nominal use				
	I_1	I_{max}	I_N	P_N			
	A	A	A	kW	W	m^3/h	
3-phase U_N = 400 V (380…415 V)							
02A6-4	2.6	3.2	2.6	0.75	45	34	R0
03A3-4	3.3	4.7	3.3	1.1	55	34	R0
04A0-4	4.0	5.9	4.0	1.5	66	34	R0
05A6-4	5.6	7.2	5.6	2.2	84	34	R0
07A2-4	7.2	10.1	7.2	3.0	106	50	R1
09A4-4	9.4	13.0	9.4	4.0	133	50	R1
12A6-4	12.6	14.1	12.6	5.5	174	50	R1
017A-4	17.0	22.7	17.0	7.5	228	128	R2
025A-4	25.0	30.6	25.0	11.0	322	128	R2
032A-4	32.0	44.3	32.0	15.0	430	116	R3
038A-4	38.0	56.9	38.0	18.5	525	116	R3
045A-4	45.0	67.9	45.0	22.0	619	116	R3
062A-4	62	76	62	30	835	134	R4
073A-4	73	104	73	37	1024	134	R4
088A-4	88	122	88	45	1240	139	R5
106A-4	106	148	106	55	1510	139	R5
145A-4	145	178	145	75	1476	435	R6
169A-4	169	247	169	90	1976	450	R7
206A-4	206	287	206	110	2346	450	R7
246A-4	246	350	246	132	3336	550	R8
293A-4	293	418	293	160	3936	550	R8
363A-4	363	498	363	200	4836	1150	R9
430A-4	430	545	430	250	6036	1150	R9

3AXD00000586715.xls H

See definitions and notes on page 145.

NEMA ratings

Type ACH580 -01-	Input rating	Max. current	Output ratings		Heat dissipation	Air flow	Frame size
			Nominal use				
	I_1	I_{max}	I_{Ld}	P_{Ld}			
	A	A	A	hp	W	ft^3/min	
3-phase U_N = 480 V (440…480 V)							
02A6-4	2.1	2.9	2.1	1.0	45	20	R0
03A3-4	3.0	3.8	3.0	1.5	55	20	R0
04A0-4	3.4	5.4	3.4	2.0	66	20	R0
05A6-4	4.8	6.1	4.8	3.0	84	20	R0
07A2-4	6.0	7.2	6.0	3.0	106	29	R1
09A4-4	7.6	8.6	7.6	5.0	133	29	R1
12A6-4	11.0	11.4	11.0	7.5	174	29	R1
017A-4	14.0	19.8	14.0	10.0	228	75	R2
025A-4	21.0	25.2	21.0	15.0	322	75	R2
032A-4	27.0	37.8	27.0	20.0	430	68	R3
038A-4	34.0	48.6	34.0	25.0	525	68	R3
045A-4	40.0	61.2	40.0	30.0	619	68	R3
062A-4	52	76	52	40	835	79	R4
073A-4	65	104	65	50	1024	79	R4
088A-4	77	122	77	60	1240	82	R5
106A-4	96	148	96	75	1510	82	R5
145A-4	124	178	124	100	1476	256	R6
169A-4	156	247	156	125	1976	265	R7
206A-4	180	287	180	150	2346	265	R7
246A-4	240	350	240	200	3336	324	R8
293A-4	260	418	260	200	3936	324	R8
363A-4	361	542	361	300	4836	677	R9
430A-4	414	542	414	350	6036	677	R9

3AXD00000586715.xls H

Definitions

U_N	Nominal voltage of the drive. For input voltage range, see section *Electrical power network specification* on page *166*.
I_1	Nominal input current. Continuous rms input current (for dimensioning cables and fuses).
I_{max}	Maximum output current. Available for two seconds at start.
I_N	Nominal output current. Maximum continuous rms output current allowed (no overload). This is indicated in the type designation label as output current I2.
P_N	Nominal power of the drive. Typical motor power (no overloading). The kilowatt ratings apply to most IEC 4-pole motors. The horsepower ratings apply to most NEMA 4-pole motors.
I_{Ld}	Maximum current with 110% overload, allowed for one minute every ten minutes
P_{Ld}	Typical motor power in light-duty use (110% overload)

I_{Hd}	Maximum current with 150% overload, allowed for one minute every ten minutes 1) Maximum current with 130% overload, allowed for one minute every ten minutes 2) Maximum current with 125% overload, allowed for one minute every ten minutes
P_{Hd}	Typical motor power in heavy-duty use (150% overload)

Sizing

Drive sizing is based on the rated motor current and power. To achieve the rated motor power given in the table, the rated current of the drive must be higher than or equal to the rated motor current. Also the rated power of the drive must be higher than or equal to compared to the rated motor power. The power ratings are the same regardless of the supply voltage within one voltage range.

Note: The ratings apply at ambient temperature of 40 °C (104 °F) for I_N, except for IP21 (UL Type 1) frames R0…R3, the ratings apply at ambient temperature of 50 °C (122 °F). Above theses temperatures derating is required.

Note: The DriveSize dimensioning tool available from the manufacturer is recommended for selecting the drive, motor and gear combination.

Derating

The load capacity (I_N, I_{Ld}, I_{Hd}; note that I_{max} is not derated) decreases for certain situations, as defined below. In such situations, where full motor power is required, oversize the drive so that the derated value provides sufficient capacity.

Note: If several situations are present at a time, the effect of derating for each situation is cumulative.

Example:

If your application requires continuous 12.0 A of motor current (I_N) at 8 kHz switching frequency, the supply voltage is 400 V and the drive is situated at 1500 m, calculate the appropriate drive size requirement as follows:

Switching frequency derating (page *150*):
The minimum size required is I_N = 12.0 A / 0.66 = 18.18 A,
where 0.66 is the derating for 8 kHz switching frequency (frames R0…R3).

Altitude derating (page *150*):
The derating factor for 1500 m is 1 - 1/10 000 m · (1500 - 1000) m = 0.95.
The minimum size required becomes then I_N = 18.18 A / 0.95 = 19.14 A.

Referring to I_N in the ratings tables (starting from page *144*), drive type ACS580-01-025A-4 exceeds the I_N requirement of 19.24 A.

Ambient temperature derating, IP21 (UL Type 1)

Frame size	Temperature range	
R0…R3	up to +50 °C up to +122 °F	No derating
R4…R9	up to +40 °C up to +104 °F	No derating
	+40…+50 °C +104…+122 °F	Derate 1% for every 1 °C (1.8 °F)

The output current is calculated by multiplying the current given in the rating table by the derating factor (k, in the diagram below).

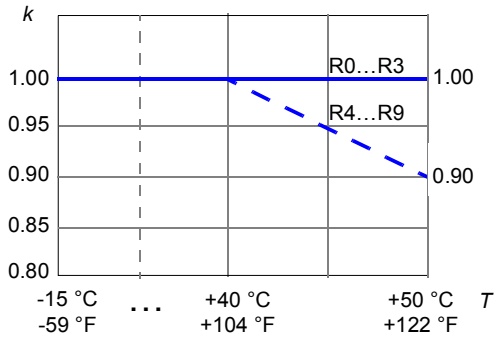

Ambient temperature derating, IP55 (UL Type 12)

IP55 (UL Type 12) drive types, other than the exceptions listed in the following subheadings

In the temperature range +40…50 °C (+104…122 °F), the rated output current is derated by 1% for every added 1 °C (1.8 °F). The output current can be calculated by multiplying the current given in the rating table by the derating factor (k):

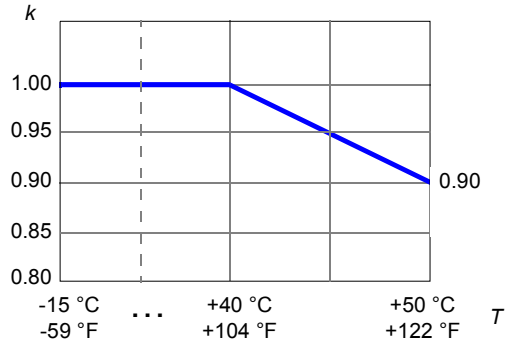

IP55 (UL Type 12) drive type -045A-4

In the temperature range +40…45 °C (+104…113 °F), the rated output current is derated by 1% for every added 1 °C (1.8 °F). In the temperature range +45…50 °C (+113…122 °F), the rated output current is derated by 1.5% for every added 1 °C (1.8 °F).

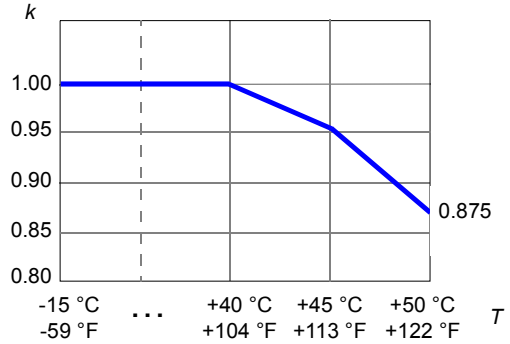

IP55 (UL Type 12) drive type -293A-4

In the temperature range +40…45 °C (+104…113 °F), the rated output current is derated by 1% for every added 1 °C (1.8 °F). In the temperature range +45…50 °C (+113…122 °F), the rated output current is derated by 2.5% for every added 1 °C

(1.8 °F). The output current can be calculated by multiplying the current given in the rating table by the derating factor (k):

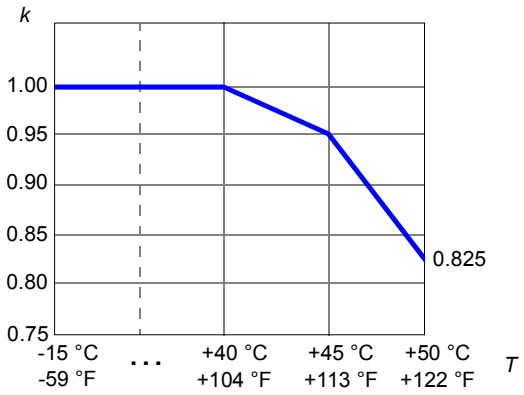

IP55 (UL Type 12) drive type -363A-4

In the temperature range +40…45 °C (+104…113 °F), the rated output current is derated by 1% for every added 1 °C (1.8 °F). In the temperature range +45…50 °C (+113…122 °F), the rated output current is derated by 2.5% for every added 1 °C (1.8 °F). The output current can be calculated by multiplying the current given in the rating table by the derating factor (k):

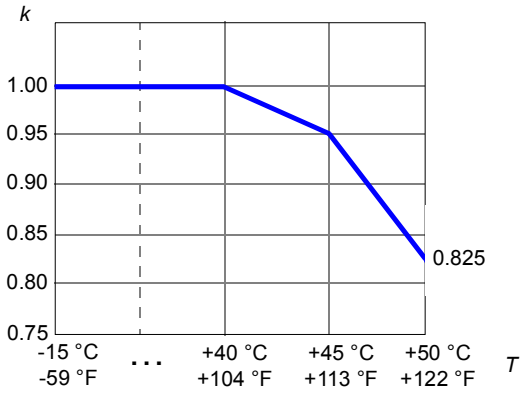

IP55 (UL Type 12) drive type -430A-4

The nominal ambient temperature for IP55 (UL Type 12) drive type -430A-4 is +35 °C (+95 °F). In higher temperatures output current of the -430A-4 drive equals the output current of the -363A-4 drive.

Switching frequency derating

The output current is calculated by multiplying the current given in the rating table by the derating factor given in the table below.

Note: If you change the minimum switching frequency with parameter 97.02 Minimum switching frequency, derate according to the table below. Changing parameter 97.01 Switching frequency reference does not require derating.

Frame size	Type ACH580 -01	Derating factor (k) for the minimum switching frequencies				
		1 kHz	2 kHz	4kHz	8 kHz	12 kHz
R0	02A6-4…05A6-4	1	1	1	0.67	0.5
R1	07A2-4…12A6-4	1	1	1	0.67	0.5
R2	017A-4…025A-4	1	1	1	0.65	0.48
R3	032A-4…045A-4	1	1	1	0.65	0.48
R4	062A-4	1	1	1	0.82	0.64
R4	073A-4	1	1	1	0.73	0.55
R5	088A-4	1	1	1	0.71	0.55
R5	106A-4	1	1	1	0.72	0.56
R6	145A-4	1	0.97	0.83	0.66	0.5
R7	169A-4…206A-4	1	0.98	0.88	0.7	0.5
R8	246A-4…293A-4	1	0.96	0.81	0.6	N/A
R9	363A-4…430A-4	1	0.95	0.78	0.56	N/A

3AXD00000586715.xls H

Altitude derating

In altitudes 1000…4000 m (3300…13120 ft) above sea level, the derating is 1% for every 100 m (330 ft).

The output current is calculated by multiplying the current given in the rating table by the derating factor k, which for x meters (1000 m <= x <= 4000 m) is:

$$k = 1 - \frac{1}{10\,000\ \text{m}} \cdot (x - 1000)\ \text{m}$$

Check the network compatibility restrictions above 2000 m (6562 ft), see *Installation site altitude* on page *175*. Check also PELV limitation on relay output terminals above 2000 m (6562 ft), see sections *Isolation areas, R0…R5* on page *171* and *Isolation areas, R6…R9* on page *172*.

Fuses (IEC)

gG as well as uR or aR fuses for protection against short-circuit in the input power cable or drive are listed below. Either fuse type can be used for frames R0…R9 if it operates rapidly enough. The operating time depends on the supply network impedance and the cross-sectional area and length of the supply cable.

Note 1: See also *Implementing thermal overload and short-circuit protection* on page *68*.

Note 2: Fuses with higher current rating than the recommended ones must not be used.

Note 3: Fuses from other manufacturers can be used if they meet the ratings and the melting curve of the fuse does not exceed the melting curve of the fuse mentioned in the table.

gG fuses

Check on the fuse time-current curve to ensure the operating time of the fuse is below 0.5 seconds. Obey the local regulations.

Type ACH580 -01-	Min. short-circuit current[1)]	Input current	gG (IEC 60269)				
			Nominal current	I^2t	Voltage rating	ABB type	IEC 60269 size
	A	A	A	A^2s	V		
3-phase U_N = 400 or 480 V (380…415 V, 440…480 V)							
02A6-4	32	2.6	4	55	500	OFAF000H4	000
03A3-4	48	3.3	6	110	500	OFAF000H6	000
04A0-4	48	4.0	6	110	500	OFAF000H6	000
05A6-4	80	5.6	10	360	500	OFAF000H10	000
07A2-4	80	7.2	10	360	500	OFAF000H10	000
09A4-4	128	9.4	16	740	500	OFAF000H16	000
12A6-4	128	12.6	16	740	500	OFAF000H16	000
017A-4	200	17.0	25	2500	500	OFAF000H25	000
025A-4	256	25.0	32	4000	500	OFAF000H32	000
032A-4	320	32.0	40	7700	500	OFAF000H40	000
038A-4	400	38.0	50	16000	500	OFAF000H50	000
045A-4	500	45.0	63	20100	500	OFAF000H63	000
062A-4	800	62	80	37500	500	OFAF000H80	000
073A-4	1000	73	100	65000	500	OFAF000H100	000
088A-4	1000	88	100	65000	500	OFAF000H100	000
106A-4	1300	106	125	103000	500	OFAF00H125	00
145A-4	1700	145	160	185000	500	OFAF00H160	00
169A-4	3300	169	250	600000	500	OFAF0H250	0
206A-4	5500	206	315	710000	500	OFAF1H315	1
246A-4	6400	246	355	920000	500	OFAF1H355	1
293A-4	7800	293	425	1300000	500	OFAF2H425	2
363A-4	9400	363	500	2000000	500	OFAF2H500	2
430A-4	10200	430	630	2800000	500	OFAF3H630	3

3AXD00000586715.xls H

[1)] Minimum short-circuit current of the installation

uR and aR fuses

Type ACH580 -01-	Min. short-circuit current[1)]	Input current	uR or aR				
			Nominal current	I^2t	Voltage rating	Bussmann type	IEC 60269 size
	A	A	A	A^2s	V		
3-phase U_N = 400 or 480 V (380…415 V, 440…480 V)							
02A6-4	TBA	2.6	25	130	690	170M1561	000
03A3-4	TBA	3.3	25	130	690	170M1561	000
04A0-4	TBA	4.0	25	130	690	170M1561	000
05A6-4	TBA	5.6	25	130	690	170M1561	000
07A2-4	TBA	7.2	25	130	690	170M1561	000
09A4-4	TBA	9.4	25	130	690	170M1561	000
12A6-4	TBA	12.6	25	130	690	170M1561	000
017A-4	TBA	17.0	40	460	690	170M1563	000
025A-4	TBA	25.0	40	460	690	170M1563	000
032A-4	TBA	32.0	63	1450	690	170M1565	000
038A-4	TBA	38.0	63	1450	690	170M1565	000
045A-4	TBA	45.0	80	2550	690	170M1566	000
062A-4	380	62	100	4650	690	170M1567	000
073A-4	480	73	125	8500	690	170M1568	000
088A-4	480	88	160	16000	690	170M1569	000
106A-4	700	106	200	15000	690	170M3815	1
145A-4	700	145	250	28500	690	170M3816	1
169A-4	1280	169	315	46500	690	170M3817	1
206A-4	1520	206	350	68500	690	170M3818	1
246A-4	2050	246	450	105000	690	170M5809	2
293A-4	2200	293	500	145000	690	170M5810	2
363A-4	3100	363	630	275000	690	170M5812	2
430A-4	3600	430	700	405000	690	170M5813	2

3AXD00000586715.xls H

[1)] Minimum short-circuit current of the installation

Fuses (UL)

UL class T fuses for branch circuit protection per NEC are listed below. Fast acting class T or faster fuses are recommended in the USA. **Check on the fuse time-current curve to ensure the operating time of the fuse is below 0.5 seconds. Obey the local regulations.**

Note 1: See also *Implementing thermal overload and short-circuit protection* on page *68*.

Note 2: Fuses with higher current rating than the recommended ones must not be used.

Note 3: Fuses from other manufacturers can be used if they meet the ratings and the melting curve of the fuse does not exceed the melting curve of the fuse mentioned in the table.)

Type ACH580 -01-	Input current	UL			
		Nominal current	Voltage rating	Bussmann type	UL class
	A	A	V		
3-phase U_N = 460 V (440…480 V)					
02A6-4	2.6	3	600	JJS-3	T
03A3-4	3.3	6	600	JJS-6	T
04A0-4	4.0	6	600	JJS-6	T
05A6-4	5.6	10	600	JJS-10	T
07A2-4	7.2	10	600	JJS-10	T
09A4-4	9.4	15	600	JJS-15	T
12A6-4	12.6	20	600	JJS-20	T
017A-4	17.0	25	600	JJS-25	T
025A-4	25.0	35	600	JJS-35	T
032A-4	32.0	40	600	JJS-40	T
038A-4	38.0	50	600	JJS-50	T
045A-4	45.0	60	600	JJS-60	T
062A-4	62	80	600	JJS-80	T
073A-4	73	90	600	JJS-90	T
088A-4	88	110	600	JJS-110	T
106A-4	106	150	600	JJS-150	T
145A-4	145	200	600	JJS-200	T
169A-4	169	225	600	JJS-225	T
206A-4	206	300	600	JJS-300	T
246A-4	246	350	600	JJS-350	T
293A-4	293	400	600	JJS-400	T
363A-4	363	500	600	JJS-500	T
430A-4	430	600	600	JJS-600	T

3AXD00000586715.xls H

Circuit breakers

The table below lists MCB circuit breakers that can be used with the drive. Not allowed for US installation.

Type ACH580 -01-	MCBs					
	ABB type	Max. short-circuit I_{sc}	Tmax frame XT / T class	Tmax rating	Electronic release	SACE ordering code for breaker and release unit
		kA	A	A	**A**	
3-phase U_N = 400 or 480 V (380…415 V, 440…480 V)						
02A6-4	S 203P-B/C/Z 10	20	N/A	N/A	N/A	N/A
03A3-4	S 203P-B/C/Z 10	20	N/A	N/A	N/A	N/A
04A0-4	S 203P-B/C/Z 10	20	N/A	N/A	N/A	N/A
05A6-4	S 203P-B/C/Z 10	20	N/A	N/A	N/A	N/A
07A2-4	S 203P-B/C/Z 10	20	N/A	N/A	N/A	N/A
09A4-4	S 203P-B/C/Z 10	20	N/A	N/A	N/A	N/A
12A6-4	S 203P-B/C/Z 16	20	N/A	N/A	N/A	N/A
017A-4	S 203P-B/C/Z 20	20	N/A	N/A	N/A	N/A
025A-4	S 203P-B/C/Z 25	20	N/A	N/A	N/A	N/A
032A-4	S 203P-B/C/Z 32	12	N/A	N/A	N/A	N/A
038A-4	S 203P-B/C/Z 40	12	N/A	N/A	N/A	N/A
045A-4	S 203P-B/C/Z 50	12	N/A	N/A	N/A	N/A
062A-4	S 803S-B/C 80	50	N/A	N/A	N/A	N/A
073A-4	S 803S-B/C 80	50	N/A	N/A	N/A	N/A
088A-4	S 803S-B/C 100	50	N/A	N/A	N/A	N/A
106A-4	S 803S-B/C 125	50	N/A	N/A	N/A	N/A
145A-4	XT4 L 250 Ekip LS/I In=250 3p F F	65	XT4	250	250	1SDA068555R1
169A-4	XT4 L 250 Ekip LS/I In=250 3p F F	65	XT4	250	250	1SDA068555R1
206A-4	T4 L 320 PR221DS-LS/I In=320 3p F F	65	T4	320	320	1SDA054141R1
246A-4	T5 L 400 PR221DS-LS/I In=400 3p F F	65	T5	400	400	1SDA054365R1
293A-4	T5 L 630 PR221DS-LS/I In=630 3p F F	65	T5	630	630	1SDA054420R1
363A-4	T5 L 630 PR221DS-LS/I In=630 3p F F	65	T5	630	630	1SDA054420R1
430A-4	T5 L 630 PR221DS-LS/I In=630 3p F F	65	T5	630	630	1SDA054420R1

3AXD00000586715.xls H

Dimensions, weights and free space requirements

Frame size	Dimensions and weights							Dimensions and weights						
	IP21							UL Type 1						
	H1 mm	H2 mm	H3 mm	H4 mm	W mm	D mm	Weight kg	H1 in	H2 in	H3 in	H4 in	W in	D in	Weight lb
R0	-*)	-*)	303	330	125	210	4.5	-*)	-*)	11.93	12.99	4.92	8.27	9.86
R1	-*)	-*)	303	330	125	223	4.6	-*)	-*)	11.93	12.99	4.92	8.78	10.08
R2	-*)	-*)	394	430	125	227	7.5	-*)	-*)	15.51	16.93	4.92	8.94	16.63
R3	-*)	-*)	454	490	203	228	14.9	-*)	-*)	17.87	19.29	7.99	8.98	32.77
R4	-*)	-*)	600	636	203	257	19	-*)	-*)	23.62	25.04	7.99	10.12	41.90
R5	596	596	732	633	203	295	28.3	23.46	23.46	28.82	24.90	7.99	11.61	62.40
R6	548	549	727	589	252	369	42.4	21.57	21.63	28.62	23.20	9,92	14.53	93.49
R7	600	601	880	641	284	370	54	23.62	23.67	34.65	25.25	11.18	14.57	119.07
R8	680	677	965	721	300	393	69	26.77	23.67	37.99	28.39	11.81	15.47	152.15
R9	680	680	955	741	380	418	97	26.77	26.77	37.60	29.19	14.96	16.46	213.89

3AXD00000586715.xls H

*) Frames with an integrated cable/conduit box

IP21 (UL Type 1), R0…R4

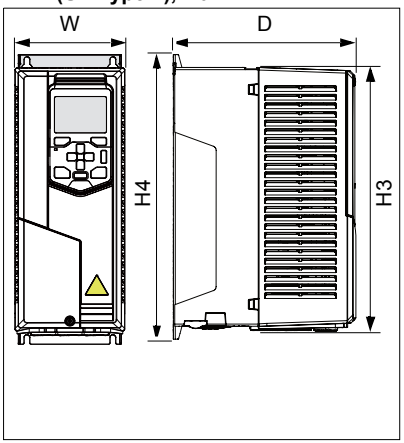

IP21 (UL Type 1), R5…R9

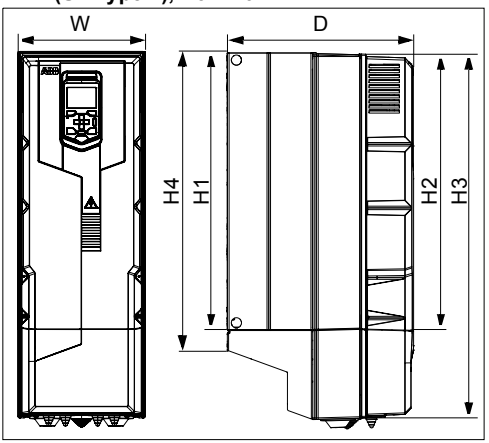

Symbols

IP21 / UL type 1

H1 R5.…R9: height back without cable/conduit box
H2 R5.…R9: height front without cable/conduit box
H3 R0.…R4: height front, R5.…R9: height front with cable/conduit box
H4 R0.…R4: height back, R5.…R9: height back with cable/conduit box
W Width
D Depth

Frame size	Dimensions and weights											
	IP55					UL Type 12						
	H3 mm	H4 mm	W mm	D mm	Weight kg	H3 in	H4 in	HW in	W in	WH in	D in	Weight lb
R0	303	330	125	222	5.1	11.93	12.99	1.97	4.92	5.47	8.74	11.16
R1	303	330	125	233	5.5	11.93	12.99	2.17	4.92	5.47	9.17	12.08
R2	394	430	125	239	7.8	15.51	16.93	2.17	4.92	5.47	9.41	17.22
R3	454	490	203	237	15.1	17.87	19.29	2.83	7.99	8.58	9.33	33.32
R4	600	636	203	265	20	23.62	25.04	2.83	7.99	8.58	10.43	44.10
R5	732	633	203	320	29	28.62	24.90	3.15	7.99	8.58	12.60	63.95
R6	726	589	252	380	43	28.58	23.20	6.10	9.92	1.57	14.96	94.82
R7	880	641	284	381	56	34.65	25.25	6.10	11.18	1.57	15.00	123.48
R8	965	721	300	452	77	37.99	28.39	6.10	11.81	1.97	17.80	169.79
R9	955	741	380	477	103	37.60	29.19	9.06	14.96	1.97	18.78	227.12

3AXD00000586715.xls H

IP55 (UL Type 12), R0…R9

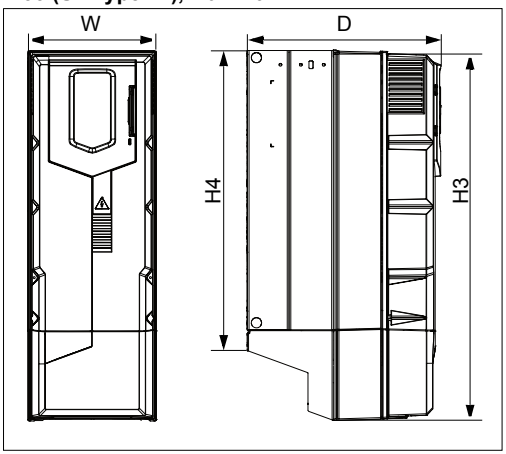

UL Type 12, R0…R9

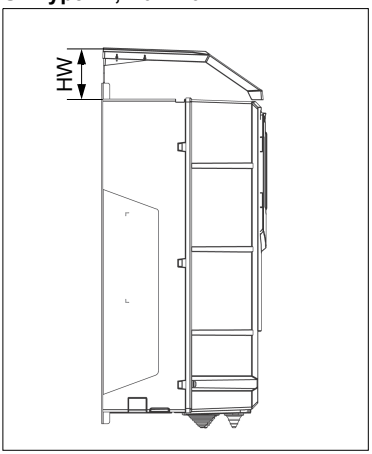

Symbols

IP55 / UL Type 12

H3 Height front
H4 Height back
HW Height of hood
W Width
WH Width of hood
D Depth

Frame size	Free space, IP21 (UL Type 1) and IP55 (UL Type 12)											
	Vertical mounting stand alone						Vertical mounting side by side					
	Above		Below		Beside		Above		Below		Between	
	mm	in	mm	in	mm	in	mm	in	mm	in	mm	in
R0	30	1.18	200	7.87	150	5.91	200	7.87	200	7.87	0	0
R1	30	1.18	200	7.87	150	5.91	200	7.87	200	7.87	0	0
R2	30	1.18	200	7.87	150	5.91	200	7.87	200	7.87	0	0
R3	53	2.09	200	7.87	150	5.91	200	7.87	200	7.87	0	0
R4	53	2.09	200	7.87	150	5.91	200	7.87	200	7.87	0	0
R5	100	3.94	200	7.87	150	5.91	200	7.87	200	7.87	0	0
R6	155	6.10	300	11.8	150	5.91	200	7.87	300	11.8	0	0
R7	155	6.10	300	11.8	150	5.91	200	7.87	300	11.8	0	0
R8	155	6.10	300	11.8	150	5.91	200	7.87	300	11.8	0	0
R9	200	7.87	300	11.8	150	5.91	200	7.87	300	11.8	0	0

3AXD00000586715.xls H

Frame size	Free space, IP21 (UL Type 1) and IP55 (UL Type 12					
	Horizontal mounting					
	Above		Below		Between	
	mm	in	mm	in	mm	in
R0	30	1.18	200	7.87	30/200	1.18/7.87
R1	30	1.18	200	7.87	30/200	1.18/7.87
R2	30	1.18	200	7.87	30/200	1.18/7.87
R3	30	1.18	200	7.87	30/200	1.18/7.87
R4	N/A	N/A	N/A	N/A	N/A	N/A
R5	N/A	N/A	N/A	N/A	N/A	N/A
R6	N/A	N/A	N/A	N/A	N/A	N/A
R7	N/A	N/A	N/A	N/A	N/A	N/A
R8	N/A	N/A	N/A	N/A	N/A	N/A
R9	N/A	N/A	N/A	N/A	N/A	N/A

3AXD00000586715.xls H

See the figures in section *Checking the installation site* on page *40*.

Losses, cooling data and noise

The air flow direction is from bottom to top.

The table below specifies the heat dissipation in the main circuit at nominal load and in the control circuit with minimum load (I/O, options and panel not in use) and maximum load (all digital inputs and relays in the ON state, and the panel, fieldbus and fan in use). The total heat dissipation is the sum of the heat dissipation in the main and control circuits. Use the maximum heat dissipation when designing cabinet or electrical room cooling needs.

Type ACH580 -01-	Heat dissipation				Air flow		Noise	Frame size
	Main circuit at rated I_{1N} at I_N	Control circuit minimum	Control circuit maximum	Main and control boards maximum				
	W	W	W	W	m^3/h	ft^3/min	dB(A)	
3-phase U_N = 400 or 480 V (380…415 V, 440…480 V)								
02A6-4	20	3.5	25	45	34	20	56	R0
03A3-4	30	3.5	25	55	34	20	56	R0
04A0-4	41	3.5	25	66	34	20	56	R0
05A6-4	59	3.5	25	84	34	20	56	R0
07A2-4	81	3.5	25	106	50	29	55	R1
09A4-4	108	3.5	25	133	50	29	55	R1
12A6-4	149	3.5	25	174	50	29	55	R1
017A-4	203	3.5	25	228	128	75	66	R2
025A-4	297	3.5	25	322	128	75	66	R2
032A-4	405	3.5	25	430	116	68	71	R3
038A-4	500	3.5	25	525	116	68	71	R3
045A-4	594	3.5	25	619	116	68	71	R3
062A-4	810	3.5	25	835	134	79	69	R4
073A-4	999	3.5	25	1024	134	79	69	R4
088A-4	1215	3.5	25	1240	139	82	63	R5
106A-4	1485	3.5	25	1510	139	82	63	R5
145A-4	1440	4.1	36	1476	435	256	67	R6
169A-4	1940	4.1	36	1976	450	265	67	R7
206A-4	2310	4.1	36	2346	450	265	67	R7
246A-4	3300	4.1	36	3336	550	324	65	R8
293A-4	3900	4.1	36	3936	550	324	65	R8
363A-4	4800	4.1	36	4836	1150	677	68	R9
430A-4	6000	4.1	36	6036	1150	677	68	R9

3AXD00000586715.xls H

Cooling air flow and heat dissipation for flange mounting (option +C135)

Type ACH580 -01-	Heat dissipation (option +135)		Air flow (option +135)				Frame size
	Heatsink	Front	Heatsink		Front		
	W	W	m^3/h	ft^3/min	m^3/h	ft^3/min	
3-phase U_N = 400 or 480 V (380…415 V, 440…480 V)							
02A6-4	TBA	TBA	TBA	TBA	TBA	TBA	R0
03A3-4	TBA	TBA	TBA	TBA	TBA	TBA	R0
04A0-4	TBA	TBA	TBA	TBA	TBA	TBA	R0
05A6-4	TBA	TBA	TBA	TBA	TBA	TBA	R0
07A2-4	TBA	TBA	TBA	TBA	TBA	TBA	R1
09A4-4	TBA	TBA	TBA	TBA	TBA	TBA	R1
12A6-4	TBA	TBA	TBA	TBA	TBA	TBA	R1
017A-4	TBA	TBA	TBA	TBA	TBA	TBA	R2
025A-4	TBA	TBA	TBA	TBA	TBA	TBA	R2
032A-4	TBA	TBA	TBA	TBA	TBA	TBA	R3
038A-4	TBA	TBA	TBA	TBA	TBA	TBA	R3
045A-4	TBA	TBA	TBA	TBA	TBA	TBA	R3
062A-4	TBA	TBA	TBA	TBA	TBA	TBA	R4
073A-4	TBA	TBA	TBA	TBA	TBA	TBA	R4
088A-4	TBA	TBA	TBA	TBA	TBA	TBA	R5
106A-4	TBA	TBA	TBA	TBA	TBA	TBA	R5
145A-4	1251	189	435	256	52	31	R6
169A-4	1701	239	450	265	75	44	R7
206A-4	2034	276	450	265	75	44	R7
246A-4	2925	375	550	324	120	71	R8
293A-4	3465	435	550	324	120	71	R8
363A-4	4275	525	1150	677	170	100	R9
430A-4	5355	645	1150	677	170	100	R9

3AXD00000586715.xls H

Terminal and lead-through data for the power cables

IEC

Input, motor, resistor and DC cable lead-throughs, maximum wire sizes (per phase) and terminal screw sizes and tightening torques (*T*) are given below.

Frame size	Cable lead-throughs		L1, L2, L3, T1/U, T2/V, T3/W terminals		Grounding terminals
	Per cable type	Ø[1]	Min wire size (solid/ stranded)[3]	Max wire size (solid/ stranded)	Max wire size
	pcs	mm	mm^2	mm^2	mm^2
R0	1	30	0.20/0.25	6/4	16/16
R1	1	30	0.20/0.25	6/4	16/16
R2	1	30	0.5/0.5	16/16	16/16
R3	1	30	0.5/0.5	35/25	35/35
R4	1	45	0.5/0.5	50	35/35
R5	1	45	6	70	-[2]
R6	1	45	25	150	-[2]
R7	1	54	95	240	-[2]
R8	2	45	2×50	2×150	-[2]
R9	2	54	2×95	2×240	-[2]

3AXD00000586715.xls H

[1] Maximum cable diameter accepted. For the lead-through plate hole diameters, see chapter *Dimension drawings* on page *185*.
[2] Either cable lug (R5, see page *94*) or clamp (R6…R9, see page *98*) is used for grounding.
[3] **Note:** Minimum wire size does not necessarily have enough current capability for full load. Make sure the installation complies with local laws and regulations.

Note: For the tightening torques of the grounding terminals, see sections *Connection procedure, frames R0…R4* on page *81*, *Connection procedure, frame R5* on page *90* and *Connection procedure, frames R6…R9* on page *96*.

Frame size	Cable lead-throughs		R+, R-, UDC+ and UDC- terminals			
	Per cable type	Ø[1]	Min wire size (solid/ stranded)[3]	Max wire size (solid/ stranded)	*T* (Wire screw)	
	pcs	mm	mm^2	mm^2	M…	N·m
R0	1	23	0.20/0.25	6/4	[2]	0.5…0.6
R1	1	23	0.20/0.25	6/4	[2]	0.5…0.6
R2	1	23	0.5/0.5	16/16	[2]	1.2…1.5
R3	1	23	0.5/0.5	35/25	[2]	2.5…4.5
R4	1	39	0.5/0.5	50	[2]	4
R5	1	39	6	70	M5	5.6
R6	1	45	25	150	M8	30
R7	1	54	95	240	M10	30
R8	2	45	2×50	2×150	M10	40
R9	2	54	2×95	2×240	M12	70

3AXD00000586715.xls H

[1] Maximum cable diameter accepted. For the lead-through plate hole diameters, see chapter *Dimension drawings* on page *185*.
[2] See the table below.
[3] **Note:** Minimum wire size does not necessarily have enough current capability for full load. Make sure the installation complies with local laws and regulations.

Frame size	Screwdrivers for the terminals of the main circuit
R0	Slot 4,5 mm
R1	Slot 4,5 mm
R2	PH1
R3, R4	PH2

3AXD00000586715.xls H

US

Input, motor, resistor and DC cable lead-throughs, maximum wire sizes (per phase) and terminal screw sizes and tightening torques (*T*) are given below.

Frame size	Cable lead-throughs		L1, L2, L3, T1/U, T2/V, T3/W terminals		Grounding terminals
	Per cable type	Ø[1]	Min wire size (solid/ stranded)[3]	Max wire size (solid/ stranded)	Max wire size
	pcs	in	AWG	AWG	AWG
R0	1	1.18	24	10	6/6
R1	1	1.18	24	10	6/6
R2	1	1.18	20	6	6/6
R3	1	1.18	20	2	2/2
R4	1	1.77	20	1	2/2
R5	1	1.77	10	2/10	-[2]
R6	1	1.77	3	300 MCM	-[2]
R7	1	2.13	3/0	500 MCM	-[2]
R8	2	1.77	2×1/0 / 2×3/0 [4]	2×300 MCM	-[2]
R9	2	2.13	2×3/0	2×500 MCM	-[2]

3AXD00000586715.xls H

[1] Maximum cable diameter accepted. For the lead-through plate hole diameters, see chapter *Dimension drawings* on page *185*.
[2] Either cable lug (R5, see page *94*) or cable clamp (R6…R9, see page *98*) is used for grounding.
[3] **Note:** Minimum wire size does not necessarily have enough current capability for full load. Make sure the installation complies with local laws and regulations.
[4] -01-246A-4: 2×1/0, -01-293A-4: 2×3/0

Note: For the tightening torques of the grounding terminals, see sections *Connection procedure, frames R0…R4* on page *81*, *Connection procedure, frame R5* on page *90* and *Connection procedure, frames R6…R9* on page *96*.

Frame size	Cable lead-throughs		R+, R-, UDC+ and UDC- terminals			
	Per cable type	Ø[1]	Min wire size (solid/ stranded)[3]	Max wire size (solid/ stranded)	*T* (Wire screw)	
	pcs	in	AWG	AWG	M…	lbf·ft
R0	1	0.906	24	10	[2]	0.4
R1	1	0.906	24	10	[2]	0.4
R2	1	0.906	20	6	[2]	1.1
R3	1	0.906	20	2	[2]	3.3
R4	1	1.54	50	1	[2]	3.0
R5	1	1.54	10	2/10	M5	4.1
R6	1	1.77	3	300 MCM	M8	22.1
R7	1	2.13	3/10	500 MCM	M10	29.5
R8	2	1.77	2×1/0 / 2×3/0 [4]	2×300 MCM	M10	29.5
R9	2	2.13	2×3/0	2×500 MCM	M12	51.6

3AXD00000586715.xls H

[1] Maximum cable diameter accepted. For the lead-through plate hole diameters, see chapter *Dimension drawings* on page *185*.
[2] See the table below.
[3] **Note:** Minimum wire size does not necessarily have enough current capability for full load. Make sure the installation complies with local laws and regulations
[4] -01-246A-4: 2×1/0, -01-293A-4: 2×3/0.

Frame size	Screwdrivers for the terminals of the main circuit
R0	Slot 4,5 mm
R1	Slot 4,5 mm
R2	PH1
R3, R4	PH2

3AXD00000586715.xls H

Terminal and lead-through data for the control cables

IEC

Control cable lead-throughs, wire sizes and tightening torques (*T*) are given below.

Frame size	Cable lead-throughs		Control cable entries and terminal sizes			
	Holes	Max cable size	+24V, DCOM, DGND, EXT. 24V terminals		DI, AI/O, AGND, RO, STO terminals	
			Wire size	*T*	Wire size	*T*
	pcs	mm	mm^2	N·m	mm^2	N·m
R0	3	17	0.2…2.5	0.5…0.6	0.14…1.5	0.5…0.6
R1	3	17	0.2…2.5	0.5…0.6	0.14…1.5	0.5…0.6
R2	3	17	0.2…2.5	0.5…0.6	0.14…1.5	0.5…0.6
R3	3	17	0.2…2.5	0.5…0.6	0.14…1.5	0.5…0.6
R4	4	17	0.2…2.5	0.5…0.6	0.14…1.5	0.5…0.6
R5	3	17	0.2…2.5	0.5…0.6	0.14…1.5	0.5…0.6
R6	4	17	0.14…2.5	0.5…0.6	0.14…2.5	0.5…0.6
R7	4	17	0.14…2.5	0.5…0.6	0.14…2.5	0.5…0.6
R8	4	17	0.14…2.5	0.5…0.6	0.14…2.5	0.5…0.6
R9	4	17	0.14…2.5	0.5…0.6	0.14…2.5	0.5…0.6

3AXD00000586715.xls H

US

Control cable lead-throughs, wire sizes and tightening torques (*T*) are given below.

Frame size	Cable lead-throughs		Control cable entries and terminal sizes			
	Holes	Max cable size	+24V, DCOM, DGND, EXT. 24V terminals		DI, AI/O, AGND, RO, STO terminals	
			Wire size	*T*	Wire size	*T*
	pcs	in	AWG	lbf·ft	AWG	lbf·ft
R0	3	0.67	24…14	0.4	26…14	0.4
R1	3	0.67	24…14	0.4	26…14	0.4
R2	3	0.67	24…14	0.4	26…14	0.4
R3	3	0.67	24…14	0.4	26…14	0.4
R4	4	0.67	24…14	0.4	26…14	0.4
R5	3	0.67	24…14	0.4	26…14	0.4
R6	4	0.67	26…14	0.4	26…14	0.4
R7	4	0.67	26…14	0.4	26…14	0.4
R8	4	0.67	26…14	0.4	26…14	0.4
R9	4	0.67	26…14	0.4	26…14	0.4

3AXD00000586715.xls H

Electrical power network specification

Voltage (U_1)	Input voltage range 3~ 380…480 V AC. This is indicated in the type designation label as typical input voltage levels 3~ 400/480 V AC.
Network type	Public low voltage networks. TN (grounded), IT (ungrounded) and corner-grounded TN systems. See section *Checking the compatibility with IT (ungrounded) and corner-grounded TN systems* on page *75*. **Note:** Frames R4 and R5 cannot be used in corner-grounded TN systems.
Rated conditional short-circuit current (IEC 61439-1)	65 kA when protected by fuses given in the fuse tables
Frequency (f_1)	47 to 63 Hz. This is indicated in the type designation label as typical input frequency level f1 (50/60 Hz).
Imbalance	Max. ± 3% of nominal phase to phase input voltage
Fundamental power factor (cos phi$_1$)	0.98 (at nominal load)

Motor connection data

Motor types	Asynchronous AC induction motors, permanent magnet motors and synchronous reluctance motors
Short-circuit current protection (IEC/EN 61800-5-1, UL 508C)	The motor output is short-circuit proof by IEC/EN 61800-5-1 and UL 508C.
Frequency (f_2)	0.…500 Hz. This is indicated in the type designation label as input frequency level f1 (0....500 Hz).
Frequency resolution	0.01 Hz
Current	See section *Ratings* on page *144*.
Switching frequency	2 kHz, 4 kHz, 8 kHz, 12 kHz (depends on the frame and parameter settings)

Maximum recommended motor cable length

Operational functionality and motor cable length

The drive is designed to operate with optimum performance with the following maximum motor cable lengths.

Note: Conducted and radiated emissions of these motor cable lengths do not comply with EMC requirements.

Frame size	Maximum motor cable length, 4 kHz			
	Scalar control		Vector control	
	m	ft	m	ft
Standard drive, without external options				
R0	100	330	100	330
R1	100	330	100	330
R2	200	660	200	660
R3	300	990	300	990
R4	300	990	300	990
R5	300	990	300	990
R6	300	990	300	990
R7	300	990	300	990
R8	300	990	300	990
R9	300	990	300	990

3AXD00000586715.xls H

Note: In multimotor systems, the calculated sum of all motor cable lengths must not exceed the maximum motor cable length given in the table.

EMC compatibility and motor cable length

To comply with the European EMC Directive (standard EN 61800-3), use the following maximum motor cable lengths at 4 kHz switching frequency. See the table below.

Frame size	Maximum motor cable length, 4 kHz	
	m	ft
EMC limits for Category C2 [1] Standard drive with an internal EMC filter. See notes 2, 3 and 5.		
R0	100	330
R1	100	330
R2	100	330
R3	100	330
R4	100	330
R5	100	330
R6	150	492
R7	150	492
R8	150	492
R9	150	492
EMC limits for Category C3 [1] Standard drive with an internal EMC filter. See notes 3 and 4.		
R0	100	330
R1	100	330
R2	100	330
R3	100	330
R4	100	330
R5	100	330
R6	150	492
R7	150	492
R8	150	492
R9	150	492

3AXD00000586715.xls H

[1] See the terms in section *Definitions* on page *180*.

Note 2: Radiated emissions are according to C2 with an internal EMC filter.

Note 3: The internal EMC filter must be connected.

Note 4: Radiated and conducted emissions are according to category C3 with an internal filter and these cable lengths.

Note 5: Categories C1 and C2 meet requirements for connecting equipment to the public low-voltage networks.

Brake resistor connection data for frames R0…R3

Short-circuit protection (IEC/EN 61800-5-1, IEC 61439-1, UL 508C)	The brake resistor output is conditionally short-circuit proof by IEC/EN 61800-5-1 and UL 508C. Rated conditional short-circuit current as defined in IEC 61439-1.

Control connection data

External power supply	Maximum power: Frames R0…R5 25 W, 1.04 A at 24 V AC/DC ±10% with an option module Frames R6…R9: 36 W, 1.50 A at 24 V AC/DC ±10% as standard Supplied from an external power supply through option module CMOD-01 or CMOD-02 with frames R0…R5. With frames R6…R9 no options are needed. Terminal size: Frames R0…R5: 0.2…2.5 mm^2 Frames R6…R9: 0.14…2.5 mm^2
+24 V DC output (Term. 10)	Total load capacity of this outputs is 6.0 W (250 mA / 24 V) minus the power taken by the option modules installed on the board. Terminal size: Frames R0…R5: 0.2…2.5 mm^2 Frames R6…R9: 0.14…2.5 mm^2
Digital inputs DI1…DI6 (Term. 13…18)	Input type: NPN/PNP Terminal size: Frames R0…R5: 0.14…1.5 mm^2 Frames R6…R9: 0.14…2.5 mm^2 <u>DI1…DI5 (Term.13…17)</u> 12/24 V DC logic levels: “0” < 4 V, “1” > 8 V R_{in}: 2,68 kohm Hardware filtering: 0.04 ms, digital filtering: 2 ms sampling <u>DI5 (Term.17)</u> Can be used as a digital or frequency input. 12/24 V DC logic levels: “0” < 3 V, “1” > 8 V R_{in}: 6.2 kohm Max. frequency 16 kHz Symmetrical signal (duty cycle D = 0.50) <u>DI6 (Term. 18)</u> Can be used as a digital or PTC input. Digital input mode 12/24 V DC logic levels: “0” < 4 V, “1” > 8 V R_{in}: 2,68 kohm Hardware filtering: 0.04 ms, digital filtering: 2 ms sampling

	Note: DI6 is not supported in the NPN configuration. PTC mode – PTC thermistor can be connected between DI6 and +24VDC: < 1.5 kohm = ‘1’ (low temperature), > 4 kohm = ‘0’ (high temperature), open circuit = ‘0’ (high temperature). DI6 is not a reinforced/double insulated input. Connecting the motor PTC sensor to this input requires usage of a reinforced/double insulated PTC sensor inside the motor.
Relay outputs RO1…RO3 (Term. 19…27)	250 V AC / 30 V DC, 2 A Terminal size: Frames R0…R5: 0.14…1.5 mm^2 Frames R6…R9: 0.14…2.5 mm^2 See sections *Isolation areas, R0…R5* on page *171* and *Isolation areas, R6…R9* on page *172*.
Analog inputs AI1 and AI2 (Term. 2 and 5)	Current/voltage input mode selected with a parameter. Current input: 0(4)…20 mA, R_{in}: 100 ohm Voltage input: 0(2)…10 V, R_{in}: > 200 kohm Terminal size: Frames R0…R5: 0.14…1.5 mm^2 Frames R6…R9: 0.14…2.5 mm^2 Inaccuracy: typical ±1%, max. ±1.5% of full scale
Analog outputs AO1 and AO2 (Term. 7 and 8)	Current/voltage input mode for AO1 selected with a parameter. Current output: 0…20 mA, R_{load}: < 500 ohm Voltage output: 0…10 V, R_{load}: > 100 kohm (AO1 only) Terminal size: Frames R0…R5: 0.14…1.5 mm^2 Frames R6…R9: 0.14…2.5 mm^2 Inaccuracy: ±1% of full scale (in voltage and current modes)
Reference voltage output for analog inputs +10V DC (Term. 4)	Max. 20 mA output Inaccuracy: ±1%
Safe torque off (STO) inputs IN1 and IN2 (Term. 37 and 38)	24 V DC logic levels: “0” < 5 V, “1” > 13 V R_{in}: 2.47 kohm Terminal size: Frames R0…R5: 0.14…1.5 mm^2 Frames R6…R9: 0.14…2.5 mm^2
STO cable	Maximum cable length 300 m (984 ft) between activation switch (K) and drive control board, see sections *Wiring examples* on page *218* and *Safety data* on page *224*.
Control panel - drive connection	EIA-485, male RJ-45 connector, max. cable length 100 m
Control panel - PC connection	USB Type Mini-B, max. cable length 2 m

Isolation areas, R0…R5

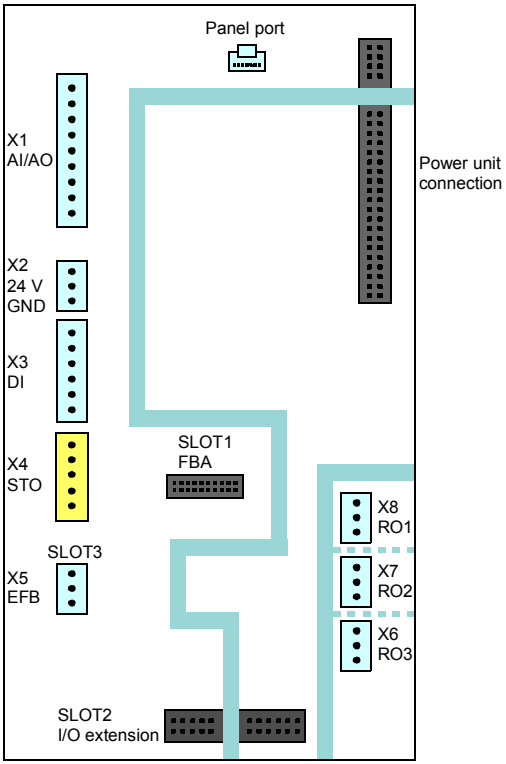

Symbol	Description
	Reinforced insulation (IEC/EN 61800-5-1:2007)
	Functional insulation (IEC/EN 61800-5-1:2007)

Below altitudes 4000 m (6562 ft): The terminals on the control board fulfill the Protective Extra Low Voltage (PELV) requirements (EN 50178): There is adequate insulation between the user terminals which only accept ELV voltages and terminals that accept higher voltages (relay outputs).

Isolation areas, R6…R9

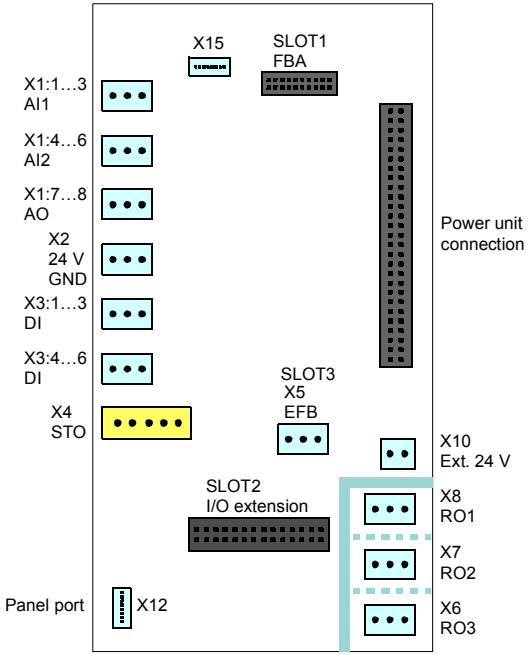

Symbol	Description
	Reinforced insulation (IEC/EN 61800-5-1:2007)
	Reinforced insulation (IEC/EN 61800-5-1:2007)

The terminals on the control board fulfill the Protective Extra Low Voltage (PELV) requirements (EN 50178): There is reinforced insulation between the user terminals which only accept ELV voltages and terminals that accept higher voltages (relay outputs).

Note: There is functional insulation between the individual relay outputs.

Note: There is reinforced insulation on the power unit.

Grounding of frames R0…R5

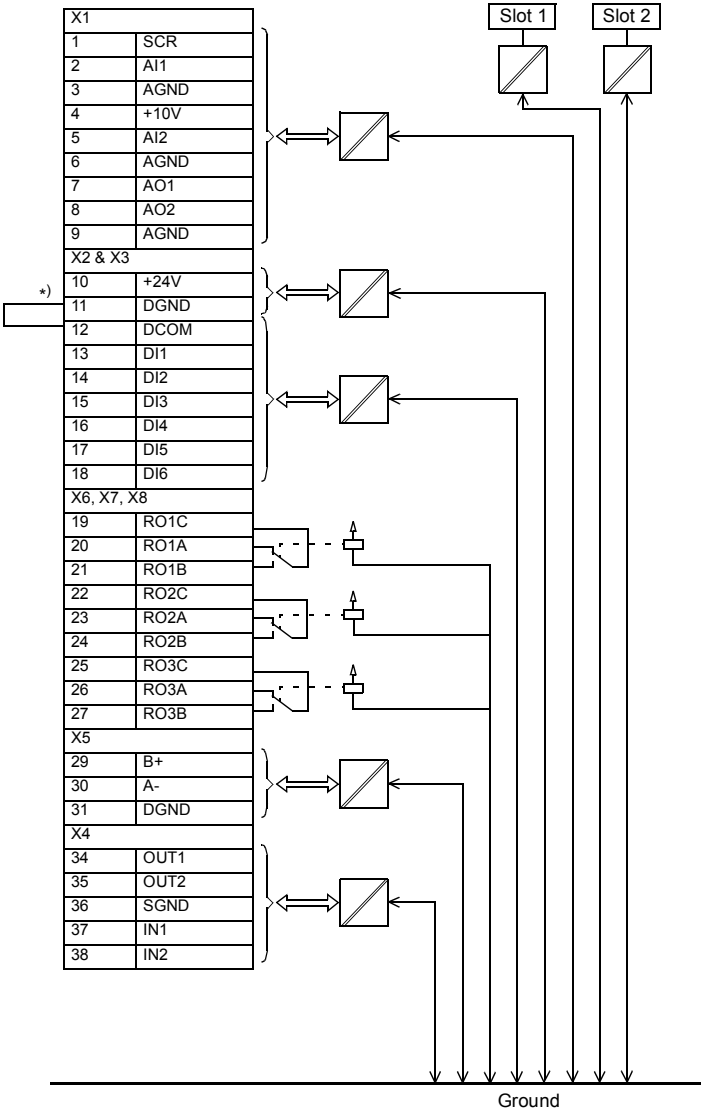

*) Jumper installed at factory

Grounding of frames R6…R9

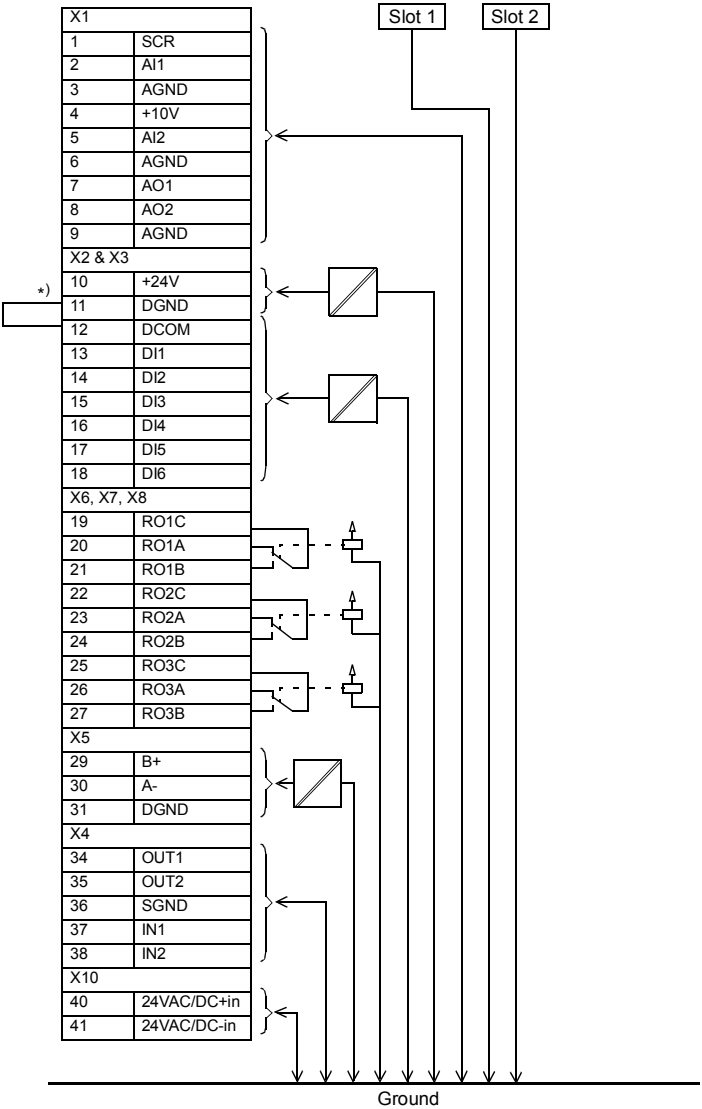

*) Jumper installed at factory

Auxiliary circuit power consumption

Maximum external power supply:
Frames R0…R5: 25 W, 1.04 A at 24 V AC/DC (with option modules CMOD-01, CMOD-02)
Frames R6…R9: 36 W, 1.50 A at 24 V AC/DC (as standard, terminals 40…41)

Efficiency

Approximately 98% at nominal power level

Degree of protection

Degree of protection (IEC/EN 60529)	IP21, IP55
Enclosure types (UL508C)	UL Type 1, UL Type 12
Overvoltage category (IEC 60664-1)	III
Protective classes (IEC/EN 61800-5-1)	I

Ambient conditions

Environmental limits for the drive are given below. The drive is to be used in a heated, indoor, controlled environment. All printed circuit boards are conformal coated.

	Operation installed for stationary use	**Storage** in the protective package	**Transportation** in the protective package
Installation site altitude	• 0 to 4000 m (13123 ft) above sea level [1)] • 0 to 2000 m (6561 ft) above sea level [2)] Output derated above 1000 m (3281 ft), see page *150*.	-	-
Air temperature	-15 to +50 °C (5 to 122 °F). 0 to -15 °C (32 to 5 °F): No frost allowed. See section *Ratings*.	-40 to +70 °C (-40 to +158 °F)	-40 to +70 °C (-40 to +158 °F)

Relative humidity	5 to 95%	Max. 95%	Max. 95%
	No condensation allowed. Maximum allowed relative humidity is 60% in the presence of corrosive gases.		
Contamination levels (IEC 60721-3-x)	IEC 60721-3-3: 2002: Classification of environmental conditions - Part 3-3: Classification of groups of environmental parameters and their severities - Stationary use of weather protected locations	IEC 60721-3-1: 1997	IEC 60721-3-2: 1997
Chemical gases	Class 3C2	Class 1C2	Class 2C2
Solid particles	Class 3S2. No conductive dust allowed.	Class 1S3 (packing must support this, otherwise 1S2)	Class 2S2
Pollution degree (IEC/EN 61800-5-1)	Pollution degree 2	-	-
Atmospheric pressure	70 to 106 kPa 0.7 to 1.05 atmospheres	70 to 106 kPa 0.7 to 1.05 atmospheres	60 to 106 kPa 0.6 to 1.05 atmospheres
Vibration (IEC 60068-2)	Max. 1 mm (0.04 in) (5 to 13.2 Hz), max. 7 m/s^2 (23 ft/s^2) (13.2 to 100 Hz) sinusoidal	-	-
Vibration (ISTA)	-	R0…R4 (ISTA 1A): Displacement, 25 mm peak to peak, 14200 vibratory impacts R5…R9 ISTA 3E): Random, overall Grms level of 0.52	

<table>
<tr><td>Shock/Drop (ISTA)</td><td>Not allowed</td><td>R0…R4 (ISTA 1A): Drop, 6 faces, 3 edges and 1 corner
<table>
<tr><th>Weight range</th><th>mm</th><th>in</th></tr>
<tr><td>0…10 kg (0…22 lb)</td><td>760</td><td>29.9</td></tr>
<tr><td>10…19 kg (22…42 lb)</td><td>610</td><td>24.0</td></tr>
<tr><td>19…28 kg (42…62 lb)</td><td>460</td><td>18.1</td></tr>
<tr><td>28…41 kg (62…90 lb)</td><td>340</td><td>13.4</td></tr>
</table>
R5…R9 (ISTA 3E): Shock, incline impact: 1.1 m/s (3.61 ft/s)
Shock, rotational edge drop: 200 mm (7.9 in)</td></tr>
</table>

1) For neutral-grounded TN and TT systems and non-corner grounded IT systems. See also section *Limiting relay output maximum voltages at high installation altitudes* on page *71*.

2) For corner-grounded TN, TT and IT systems

Materials

Drive enclosure

- PC/ABS 3 mm, color NCS 1502-Y (RAL 9002 / PMS 1C Cool Grey) and RAL 9002
- hot-dip zinc coated steel sheet 1.5 to 2.5 mm, thickness of coating 100 micrometers, color NCS 1502-Y

Package

Plywood, cardboard and molded pulp. Foam cushions PE, PP-E, bands PP.

Disposal

The main parts of the drive can be recycled to preserve natural resources and energy. Product parts and materials should be dismantled and separated.

Generally all metals, such as steel, aluminum, copper and its alloys, and precious metals can be recycled as material. Plastics, rubber, cardboard and other packaging material can be used in energy recovery. Printed circuit boards and DC capacitors (C1-1 to C1-x) need selective treatment according to IEC 62635 guidelines. To aid recycling, plastic parts are marked with an appropriate identification code.

Contact your local distributor for further information on environmental aspects and recycling instructions for professional recyclers. End of life treatment must follow international and local regulations.

Applicable standards

The drive complies with the following standards. The compliance with the European Low Voltage Directive is verified according to standard EN 61800-5-1.

EN 60204-1:2006 + AC:2010	*Safety of machinery. Electrical equipment of machines. Part 1: General requirements. Provisions for compliance:* The final assembler of the machine is responsible for installing - emergency-stop device - supply disconnecting device.
IEC/EN 60529:1992 + A2: 2013	*Degrees of protection provided by enclosures (IP code)*
EN 61000-3-12:2011	*Electromagnetic compatibility (EMC) - Part 3-12: Limits - Limits for harmonic currents produced by equipment connected to public low-voltage systems with input current* The standard is met with a Rsce (transformer short circuit ratio) of 350 or higher.
IEC/EN 61800-3:2004 + A1:2012	*Adjustable speed electrical power drive systems. Part 3: EMC requirements and specific test methods*
IEC/EN 61800-5-1:2007	*Adjustable speed electrical power drive systems. Part 5-1: Safety requirements – electrical, thermal and energy*
IEC 60664-1:2007	*Insulation coordination for equipment within low-voltage systems. Part 1: Principles, requirements and tests.*
UL 508C 3rd edition	*UL Standard for Safety, Power Conversion Equipment, second edition*
NEMA 250:2008	*Enclosures for Electrical Equipment (1000 Volts Maximum)*

CE marking

A CE mark is attached to the drive to verify that the drive follows the provisions of the European Low Voltage, EMC and RoHS Directives.The CE marking also verifies that the drive, in regard to its safety functions (such as Safe torque off), conforms with the Machinery Directive as a safety component.

Compliance with the European Low Voltage Directive

The compliance with the European Low Voltage Directive has been verified according to standard EN 61800-5-1:2007. The declaration of conformity (3AXD10000437232) is available on the Internet. See section *Document library on the Internet* on the inside of the back cover.

Compliance with the European EMC Directive

The EMC Directive defines the requirements for immunity and emissions of electrical equipment used within the European Union. The EMC product standard (EN 61800-3:2004 + A1:2012) covers requirements stated for drives. See section *Compliance with the EN 61800-3:2004 + A1:2012* below. The declaration of conformity (3AXD10000437232) is available on the Internet. See section *Document library on the Internet* on the inside of the back cover.

Compliance with the European ROHS II Directive 2011/65/EU

The RoHS II Directive defines the restriction of the use of certain hazardous substances in electrical and electronic equipment. The declaration of conformity (3AXD10000437231) is available on the Internet. See section *Document library on the Internet* on the inside of the back cover.

Compliance with the European Machinery Directive 2006/42/EC 2nd Edition – June 2010

The drive is a machinery component that can be integrated into a wide range of machinery categories as specified in European Commission's *Guide to application of the Machinery Directive 2006/42/EC 2nd Edition – June 2010*. The declaration of conformity (3AXD10000437229) is available on the Internet. See section *Document library on the Internet* on the inside of the back cover.

Validating the operation of the Safe torque off function

See chapter *Safe torque off function* on page *215*.

Compliance with the EN 61800-3:2004 + A1:2012

Definitions

EMC stands for **E**lectro**m**agnetic **C**ompatibility. It is the ability of electrical/electronic equipment to operate without problems within an electromagnetic environment. Likewise, the equipment must not disturb or interfere with any other product or system within its locality.

First environment includes establishments connected to a low-voltage network which supplies buildings used for domestic purposes.

Second environment includes establishments connected to a network not directly supplying domestic premises.

Drive of category C1: drive of rated voltage less than 1000 V and intended for use in the first environment.

Drive of category C2: drive of rated voltage less than 1000 V and intended to be installed and started up only by a professional when used in the first environment.

Note: A professional is a person or organization having necessary skills in installing and/or starting up power drive systems, including their EMC aspects.

Drive of category C3: drive of rated voltage less than 1000 V, intended for use in the second environment and not intended for use in the first environment.

Category C1

The emission limits are complied with the following provisions:

1. The optional EMC filter is selected according to the documentation and installed as specified in the EMC filter manual.
2. The motor and control cables are selected as specified in this manual.
3. The drive is installed according to the instructions given in this manual.
4. For the maximum motor cable length with 4 kHz switching frequency, see page *167*.

WARNING! In a domestic environment, this product may cause radio inference, in which case supplementary mitigation measures may be required.

Category C2

The emission limits are complied with the following provisions:

1. The motor and control cables are selected as specified in this manual.
2. The drive is installed according to the instructions given in this manual.
3. For the maximum motor cable length with 4 kHz switching frequency, see page *167*.

WARNING! The drive may cause radio interference if used in residential or domestic environment. The user is required to take measures to prevent interference, in association to the requirements for the CE compliance listed above, if necessary.

Note: Do not install a drive with the internal EMC filter connected on IT (ungrounded). The supply network becomes connected to ground potential through the internal EMC filter capacitors which may cause danger or damage to the drive. For disconnecting the EMC filter see page *77*.

Note: Do not install a drive with internal EMC filter connected on corner-grounded TN systems; otherwise the drive will be damaged. For disconnecting the internal EMC filter see page *77*.

Category C3

The drive complies with the standard with the following provisions:

1. The motor and control cables are selected as specified in this manual.
2. The drive is installed according to the instructions given in this manual.
3. For the maximum motor cable length with 4 kHz switching frequency, see page *167*

WARNING! A drive of category C3 is not intended to be used on a low-voltage public network which supplies domestic premises. Radio frequency interference is expected if the drive is used on such a network.

Category C4

If the provisions under *Category C3* cannot be met, the requirements of the standard can be met as follows:

1. It is ensured that no excessive emission is propagated to neighboring low-voltage networks. In some cases, the inherent suppression in transformers and cables is sufficient. If in doubt, the supply transformer with static screening between the primary and secondary windings can be used.

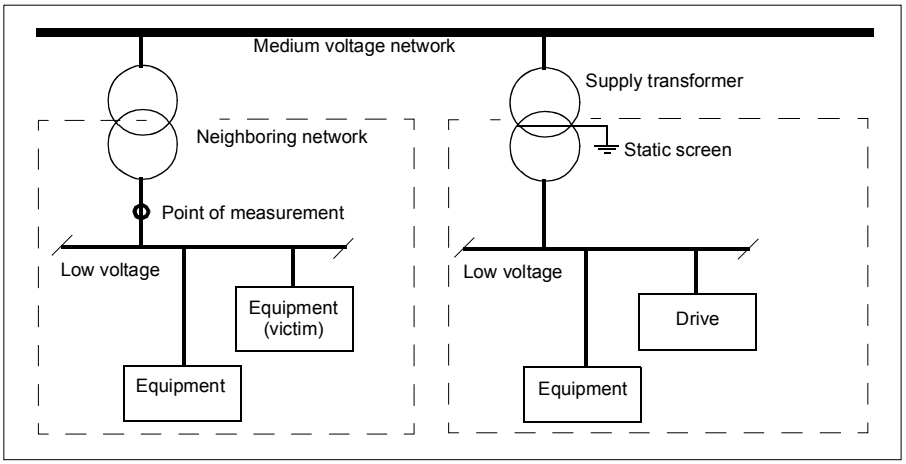

2. An EMC plan for preventing disturbances is drawn up for the installation. A template is available from the local ABB representative.
3. The motor and control cables are selected as specified in this manual.
4. The drive is installed according to the instructions given in this manual.

WARNING! A drive of category C4 is not intended to be used on a low-voltage public network which supplies domestic premises. Radio frequency interference is expected if the drive is used on such a network.

RCM marking

See the type designation label for the valid markings of your drive. Regulatory Compliance (RCM) Mark is required in Australia and New Zealand. A RCM mark is attached to the drive to verify compliance with the relevant standard (IEC/EN 61800-3:2004 – *Adjustable speed electrical power drive systems – Part 3: EMC product standard including specific test methods*), mandated by the Trans-Tasman Electromagnetic Compatibility Scheme. For fulfilling the requirements of the standard, see section Compliance with IEC/EN 61800-3:2004 on page 382. The declaration of conformity (3AXD10000493119) is available on the Internet. See section *Document library on the Internet* on the inside of the back cover.

EAC marking

EAC marking is required in Russia, Belarus and Kazakhstan. The EAC certificate of conformity (3AXD10000312900) is available on the Internet. See section *Document library on the Internet* on the inside of the back cover.

Disclaimer

The manufacturer shall have no obligation with respect to any product which (i) has been improperly repaired or altered; (ii) has been subjected to misuse, negligence or accident; (iii) has been used in a manner contrary to the manufacturer's instructions; or (iv) has failed as a result of ordinary wear and tear.

Cyber security disclaimer

This product is designed to be connected to and to communicate information and data via a network interface. It is Customer's sole responsibility to provide and continuously ensure a secure connection between the product and Customer network or any other network (as the case may be). Customer shall establish and maintain any appropriate measures (such as but not limited to the installation of firewalls, application of authentication measures, encryption of data, installation of anti-virus programs, etc) to protect the product, the network, its system and the interface against any kind of security breaches, unauthorized access, interference, intrusion, leakage and/or theft of data or information. ABB and its affiliates are not liable for damages and/or losses related to such security breaches, any unauthorized access, interference, intrusion, leakage and/or theft of data or information.

10

Dimension drawings

Contents of this chapter

This chapter shows the dimension drawings of the ACH580-01. The dimensions are given in millimeters and [inches].

Frame R0, IP21 (UL Type 1)

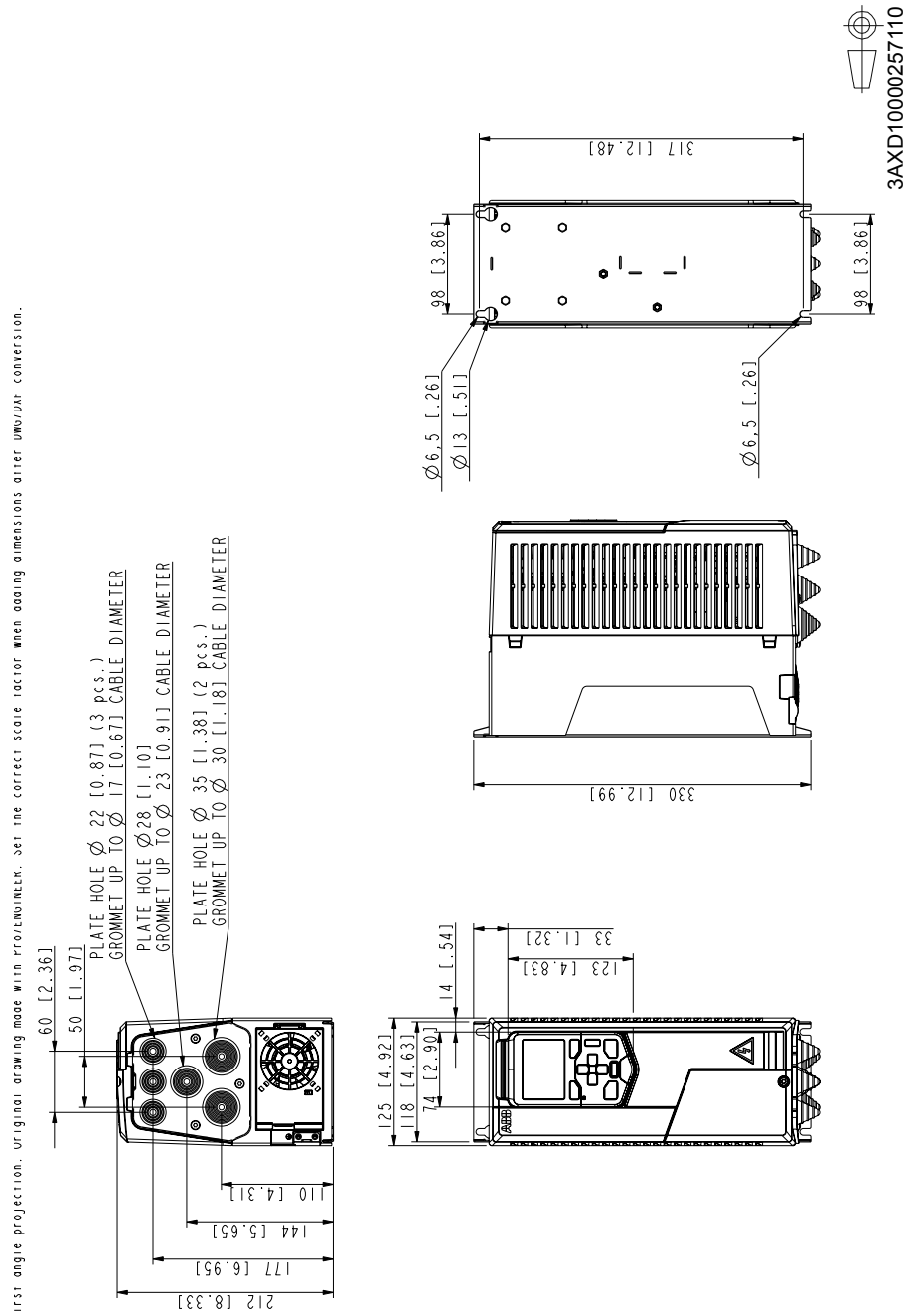

Frame R0, IP55 (UL Type 12)

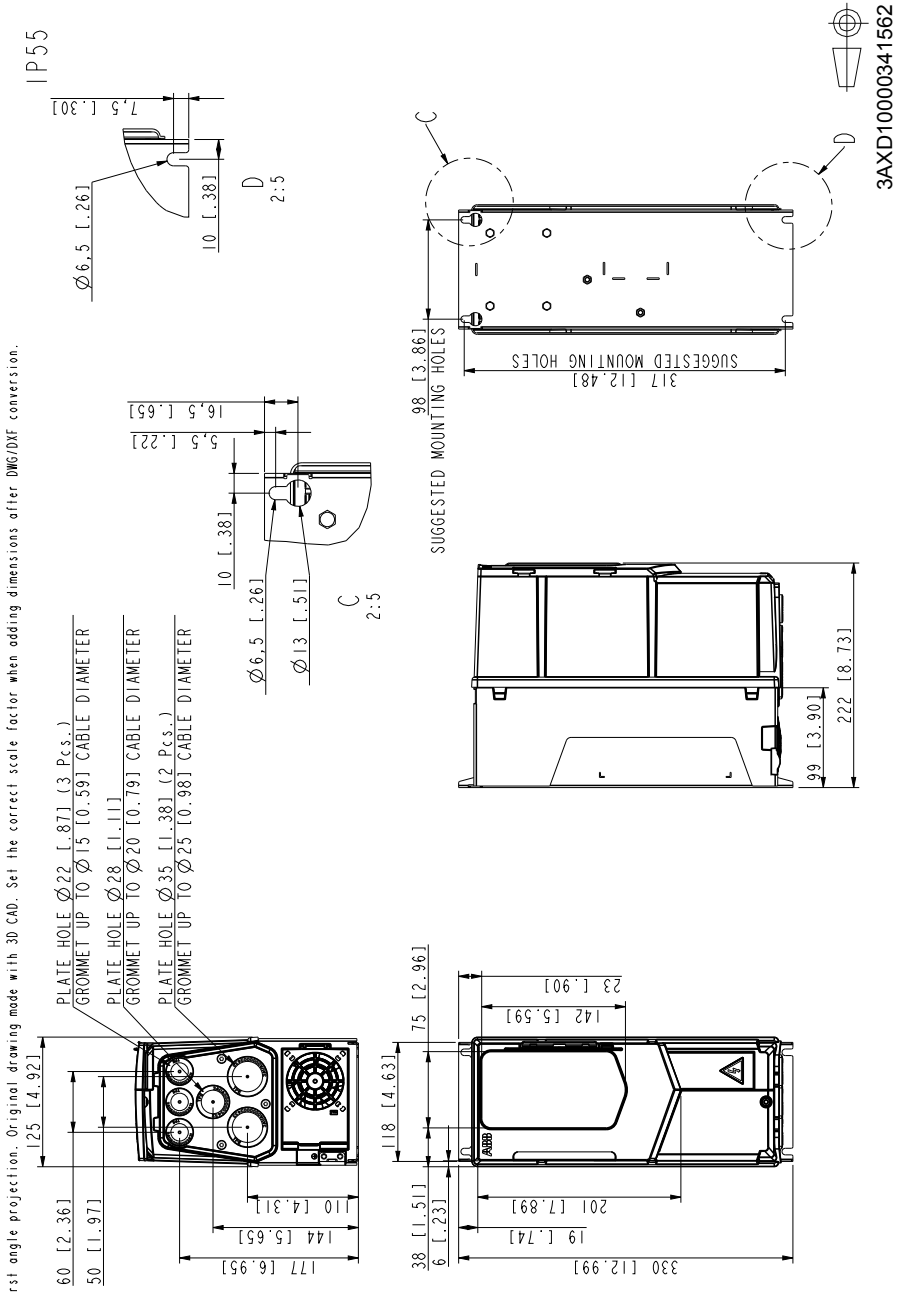

Frame R1, IP21 (UL Type 1)

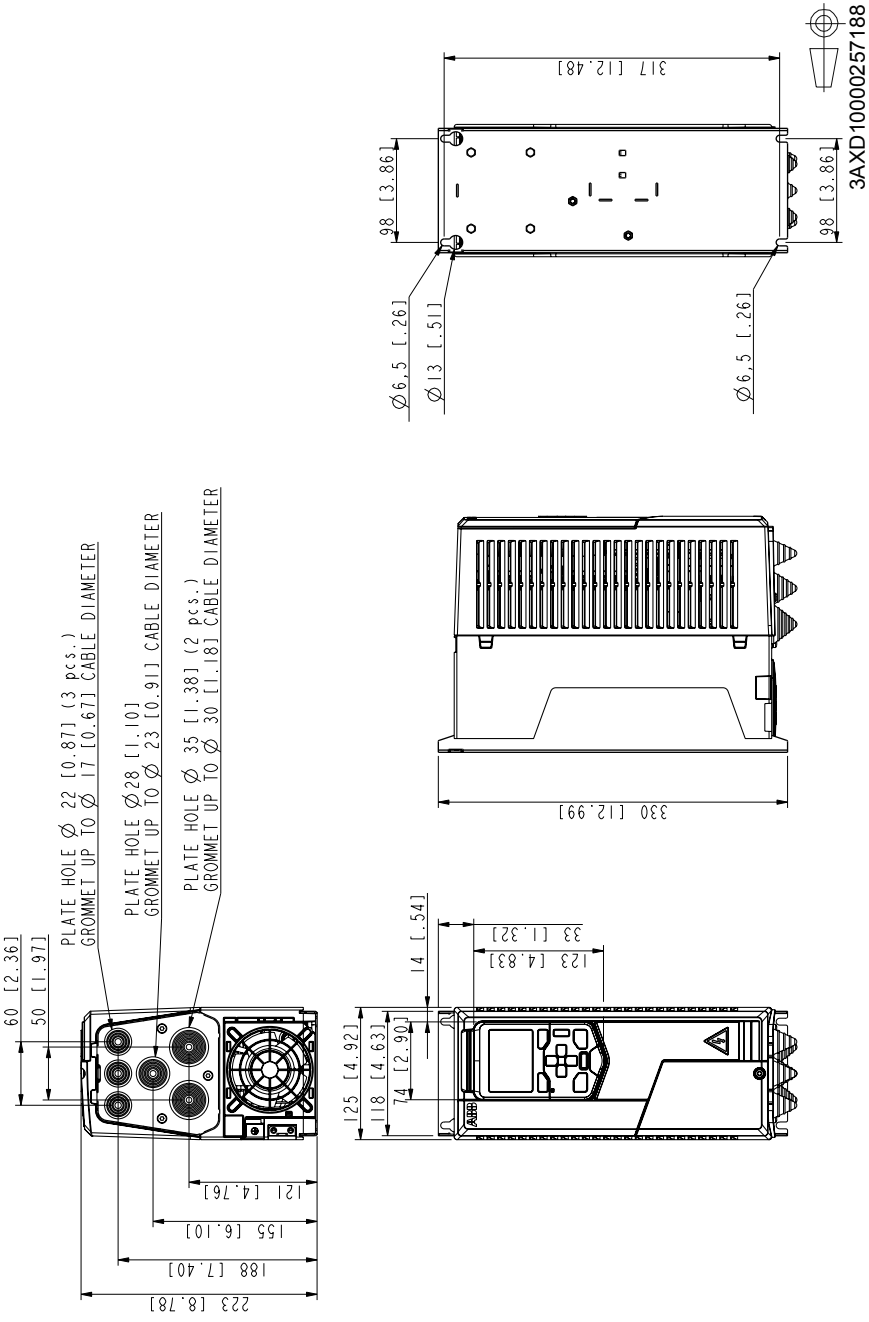

Frame R1, IP55 (UL Type 12)

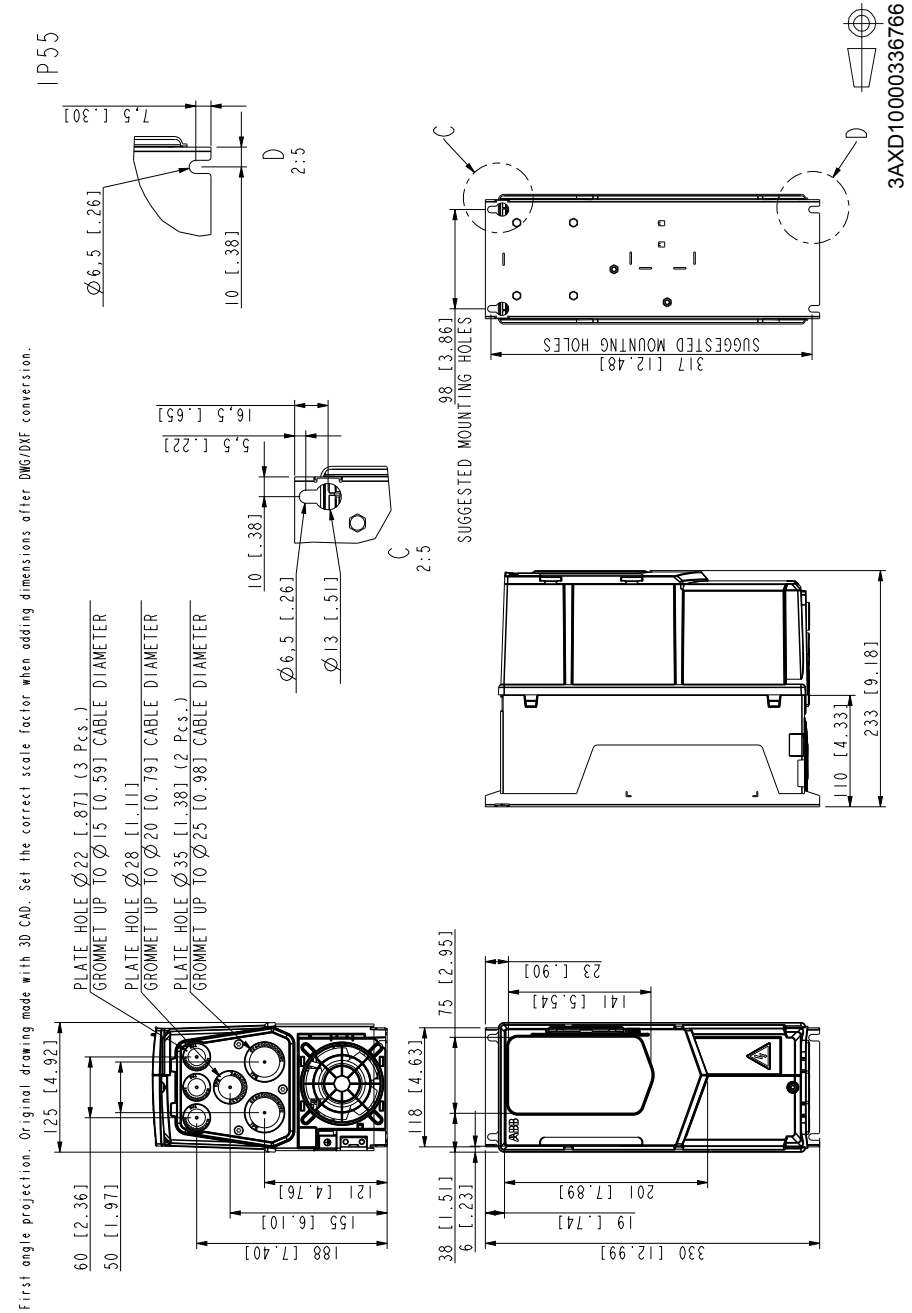

Frame R2, IP21 (UL Type 1)

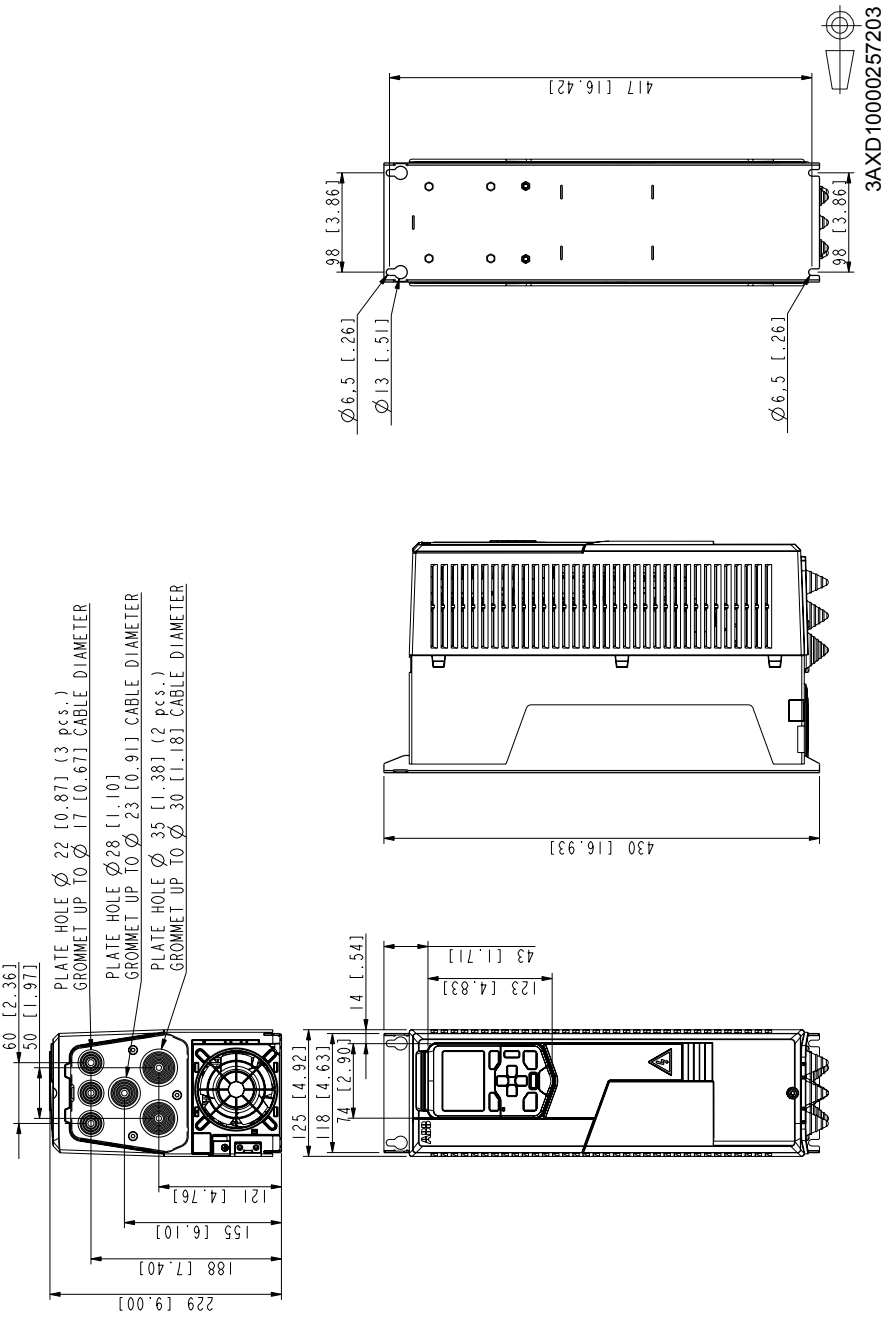

Frame R2, IP55 (UL Type 12)

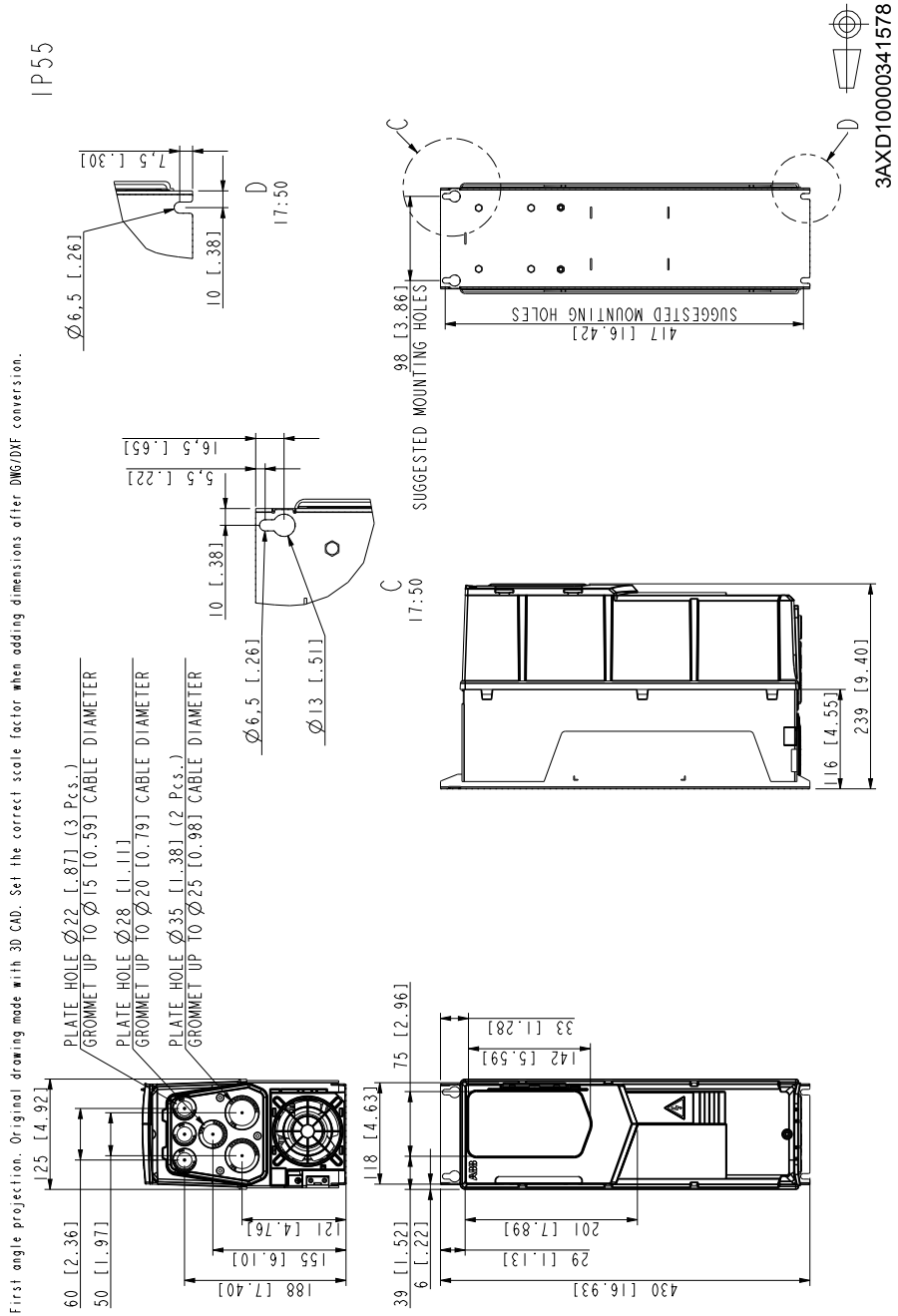

Frame R3, IP21 (UL Type 1)

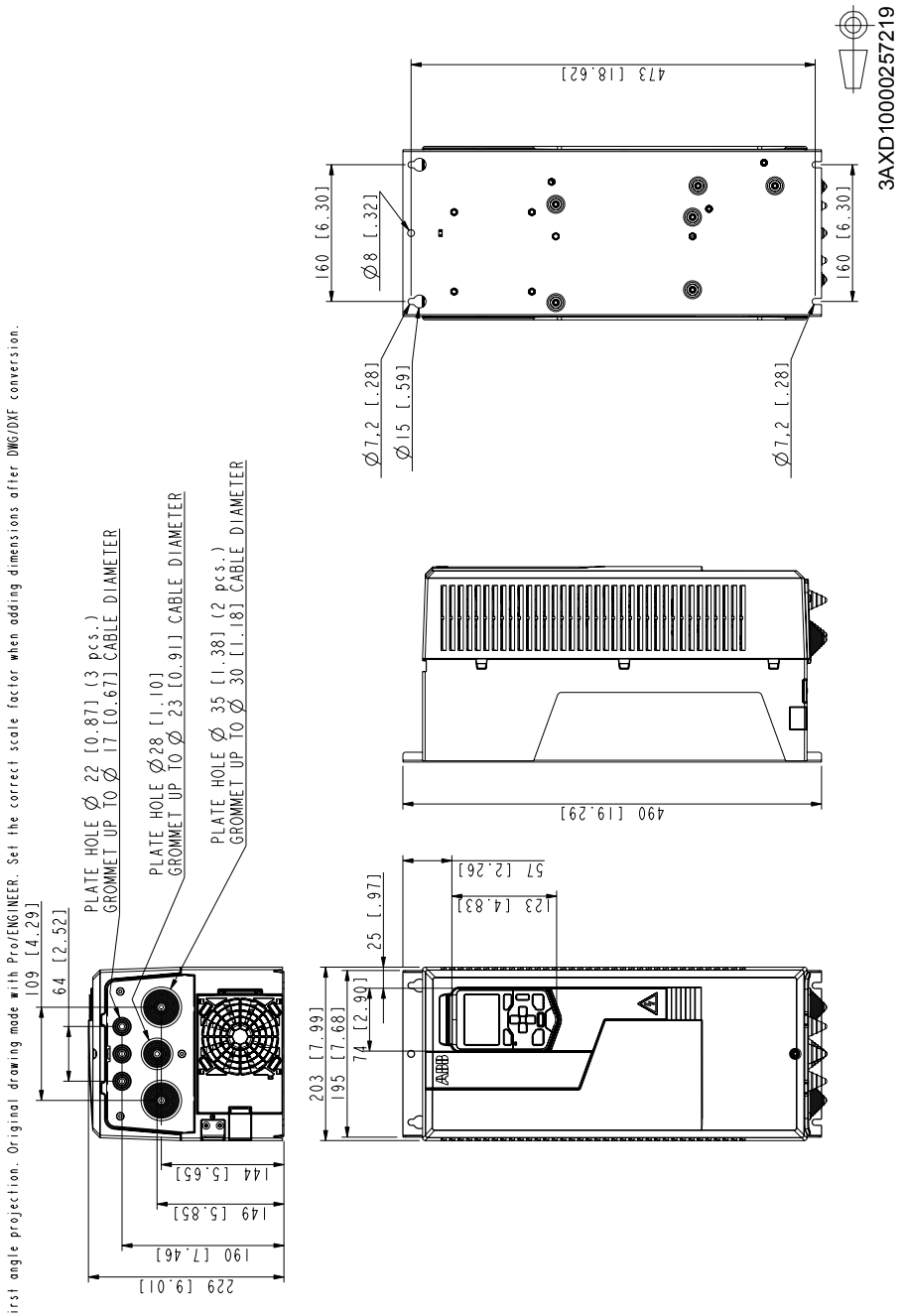

Frame R3, IP55 (UL Type 12)

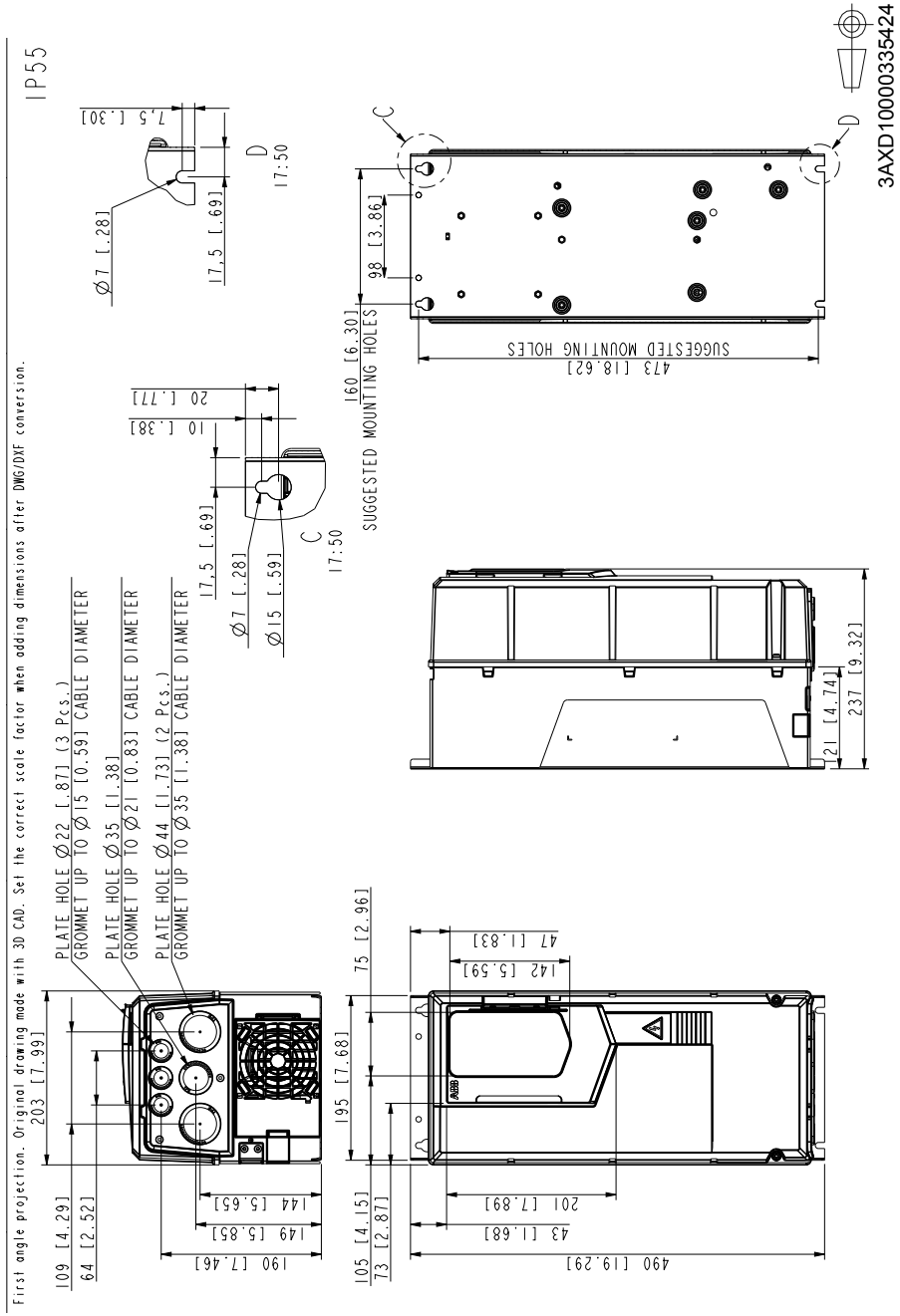

Frame R4, IP21 (UL Type 1)

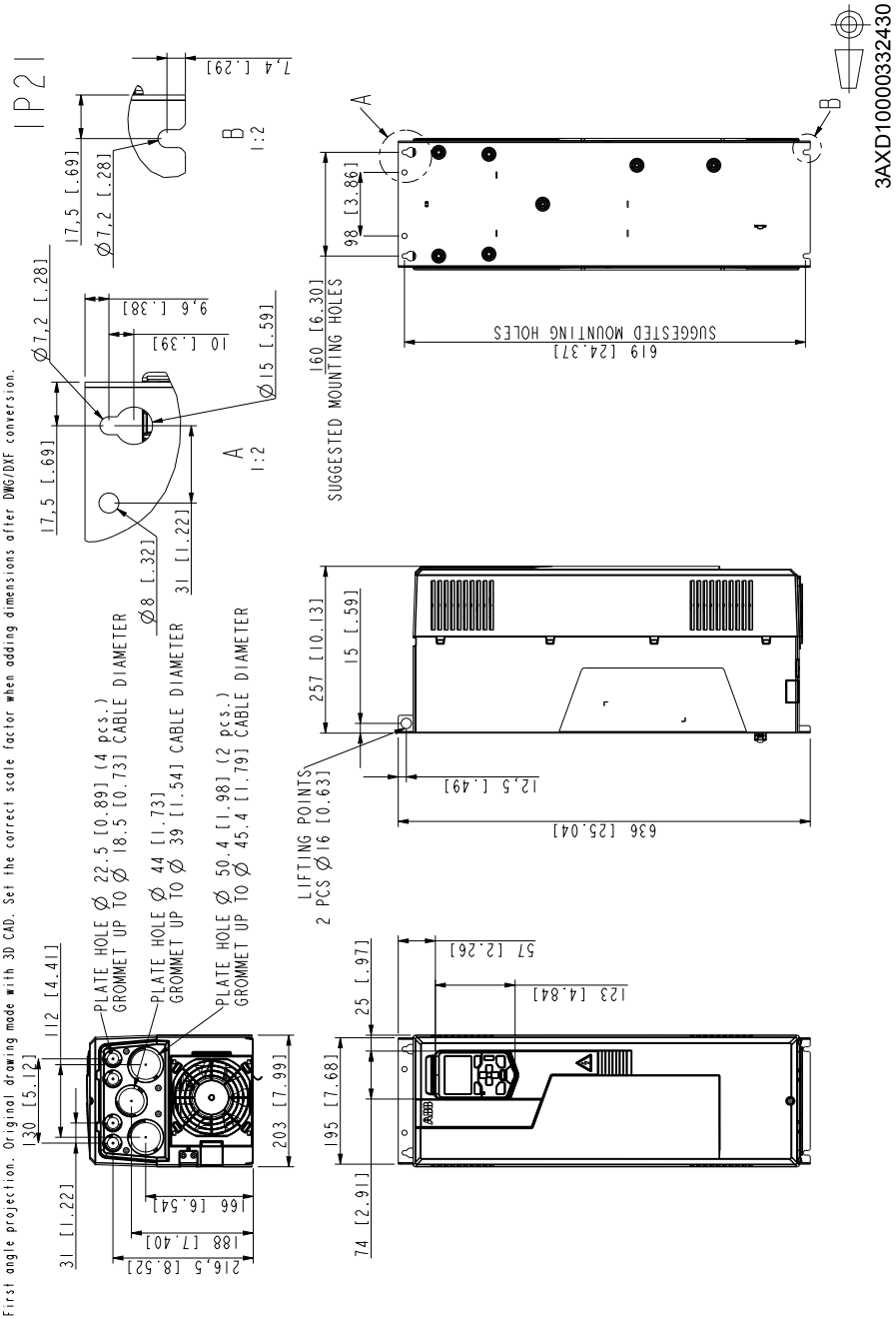

Frame R4, IP55 (UL Type 12)

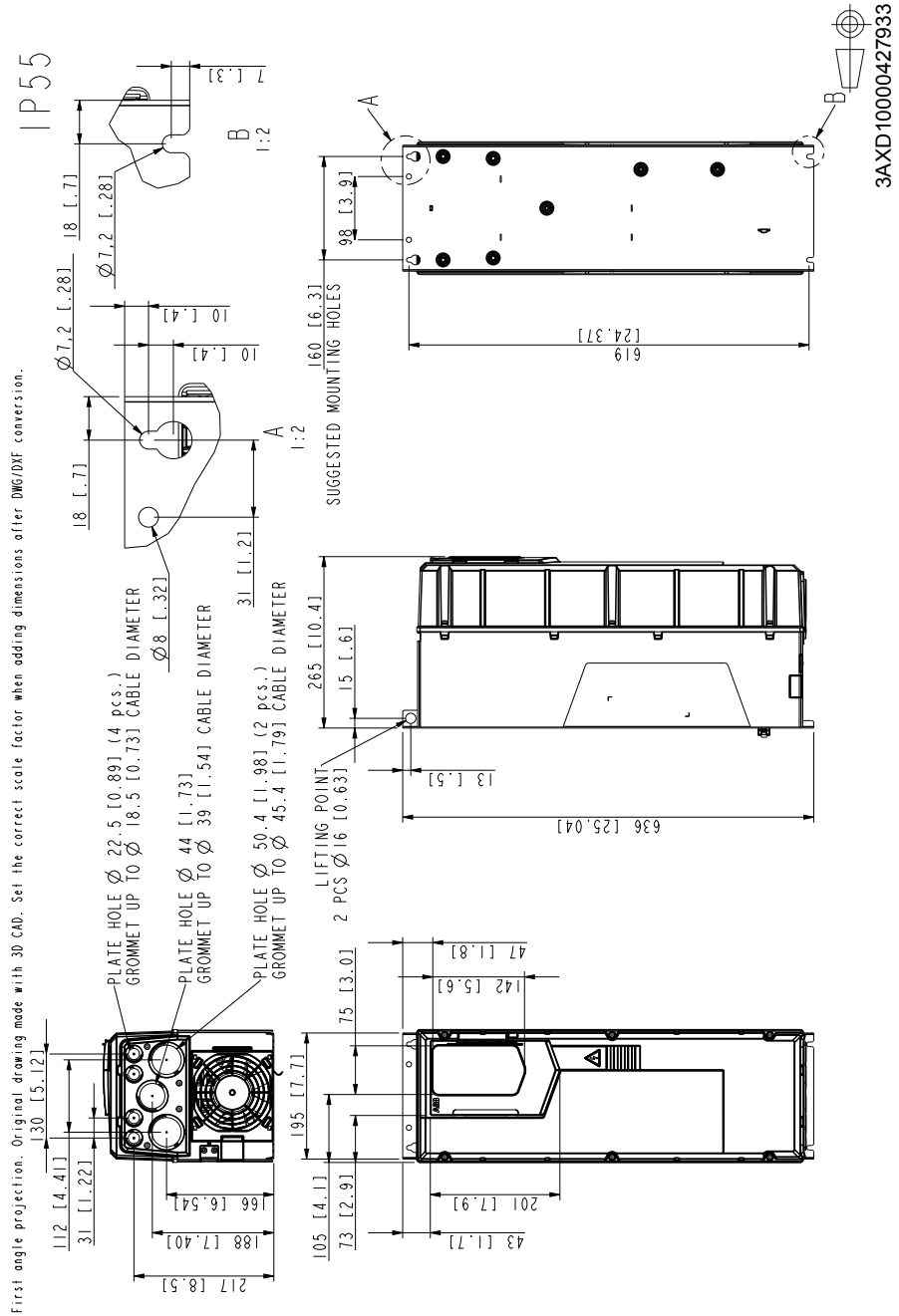

Frame R5, IP21 (UL Type 1)

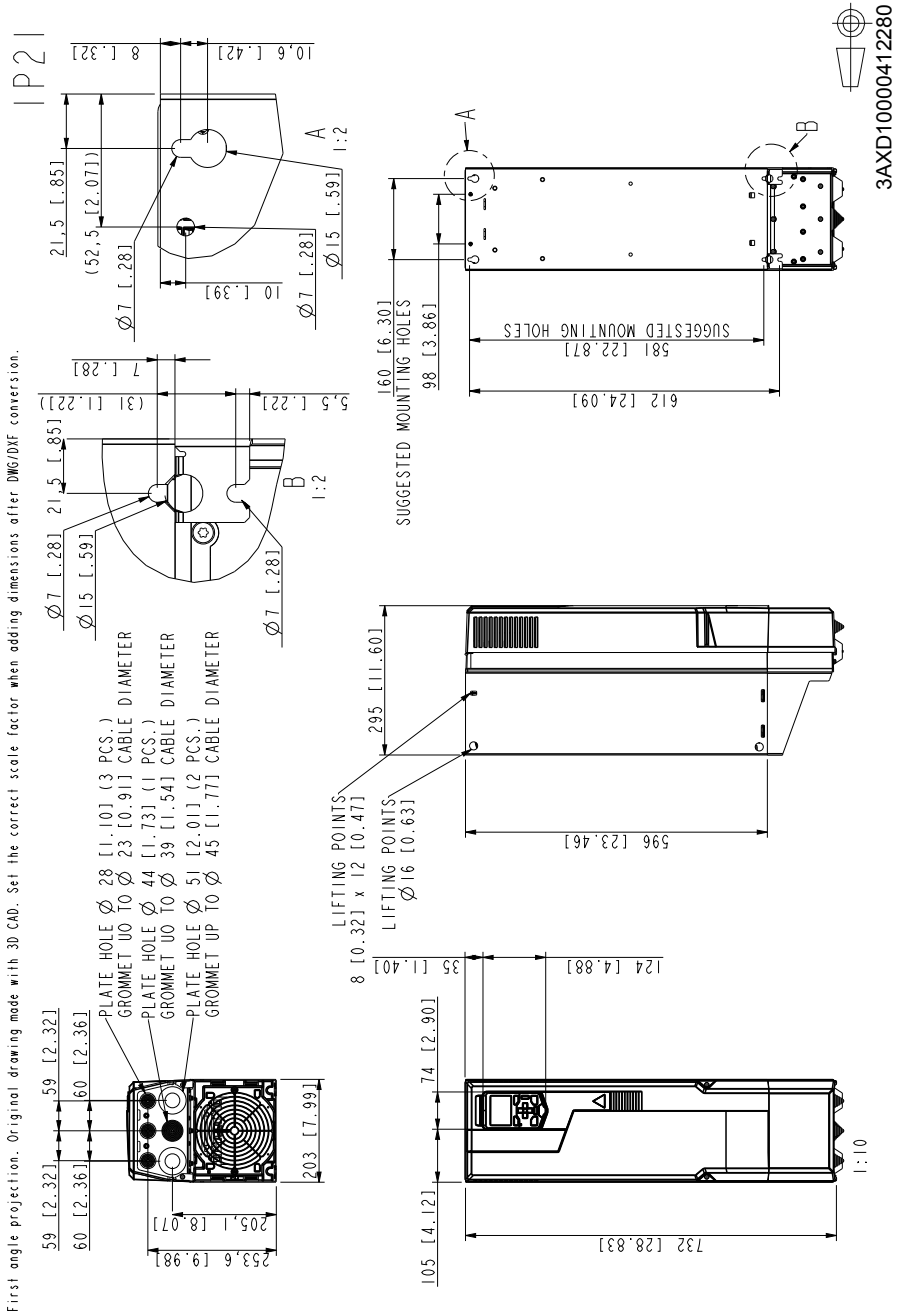

Frame R5, IP55 (UL Type 12)

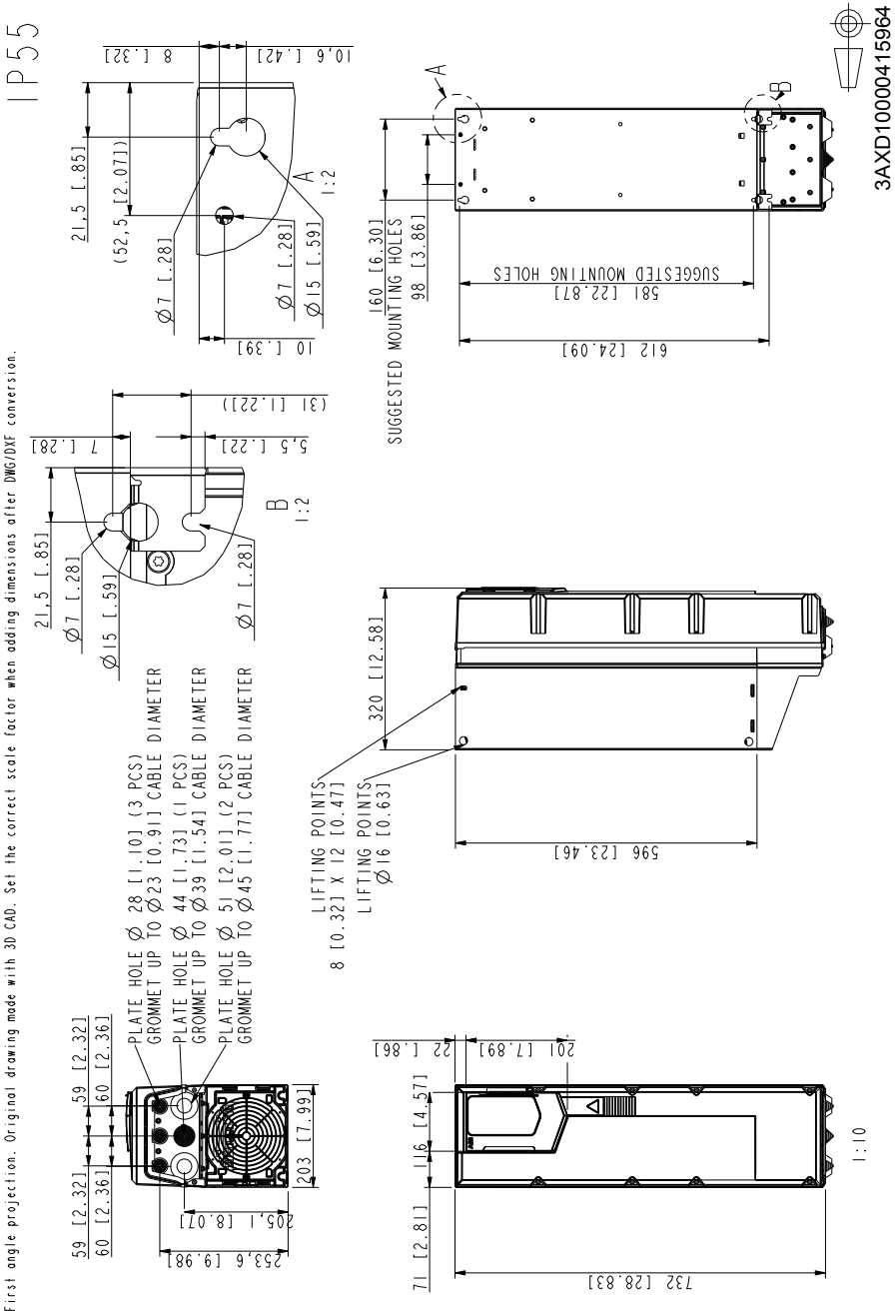

Frame R6, IP21 (UL Type 1)

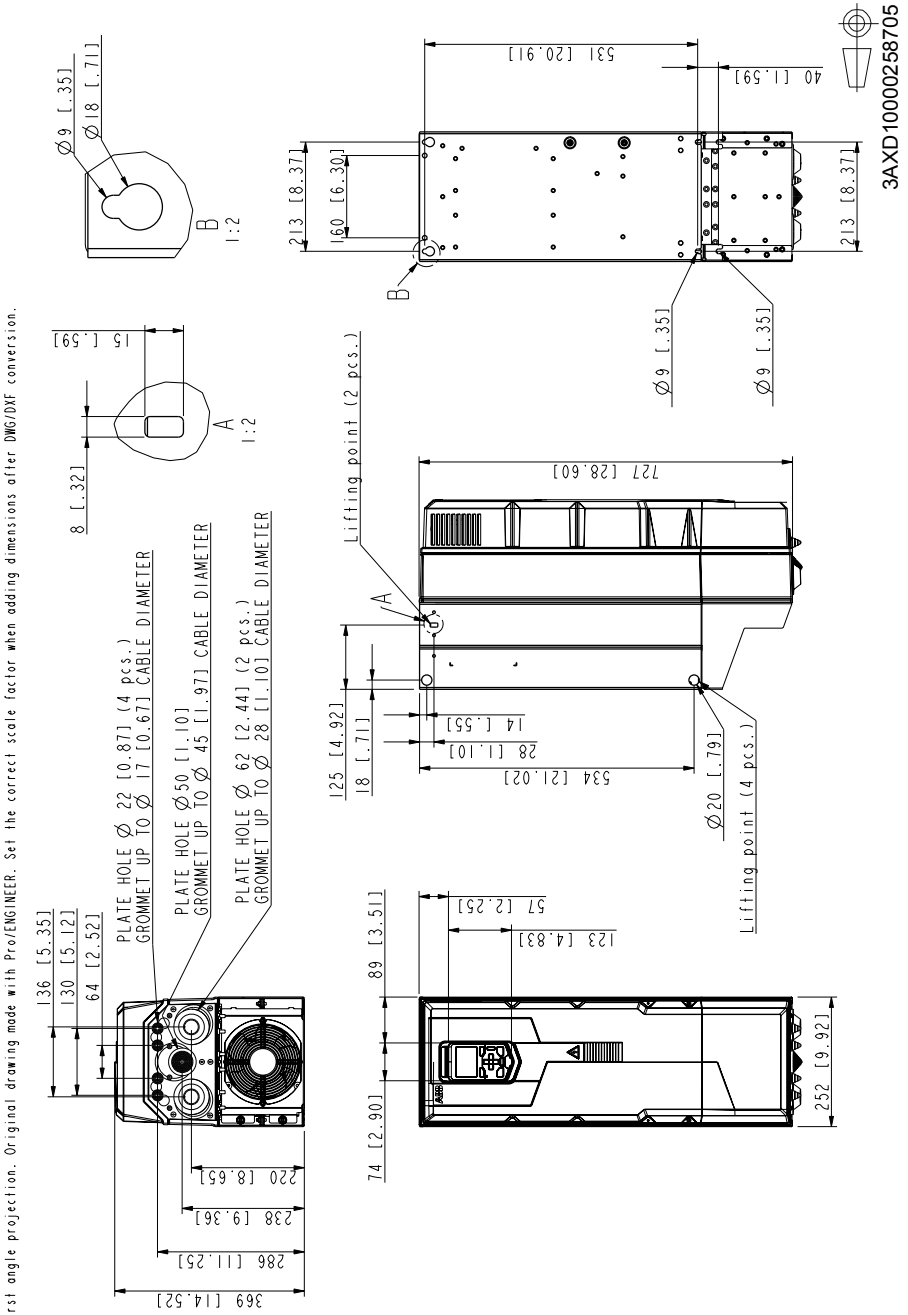

First angle projection. Original drawing made with Pro/ENGINEER. Set the correct scale factor when adding dimensions after DWG/DXF conversion.

Frame R6, IP55 (UL Type 12)

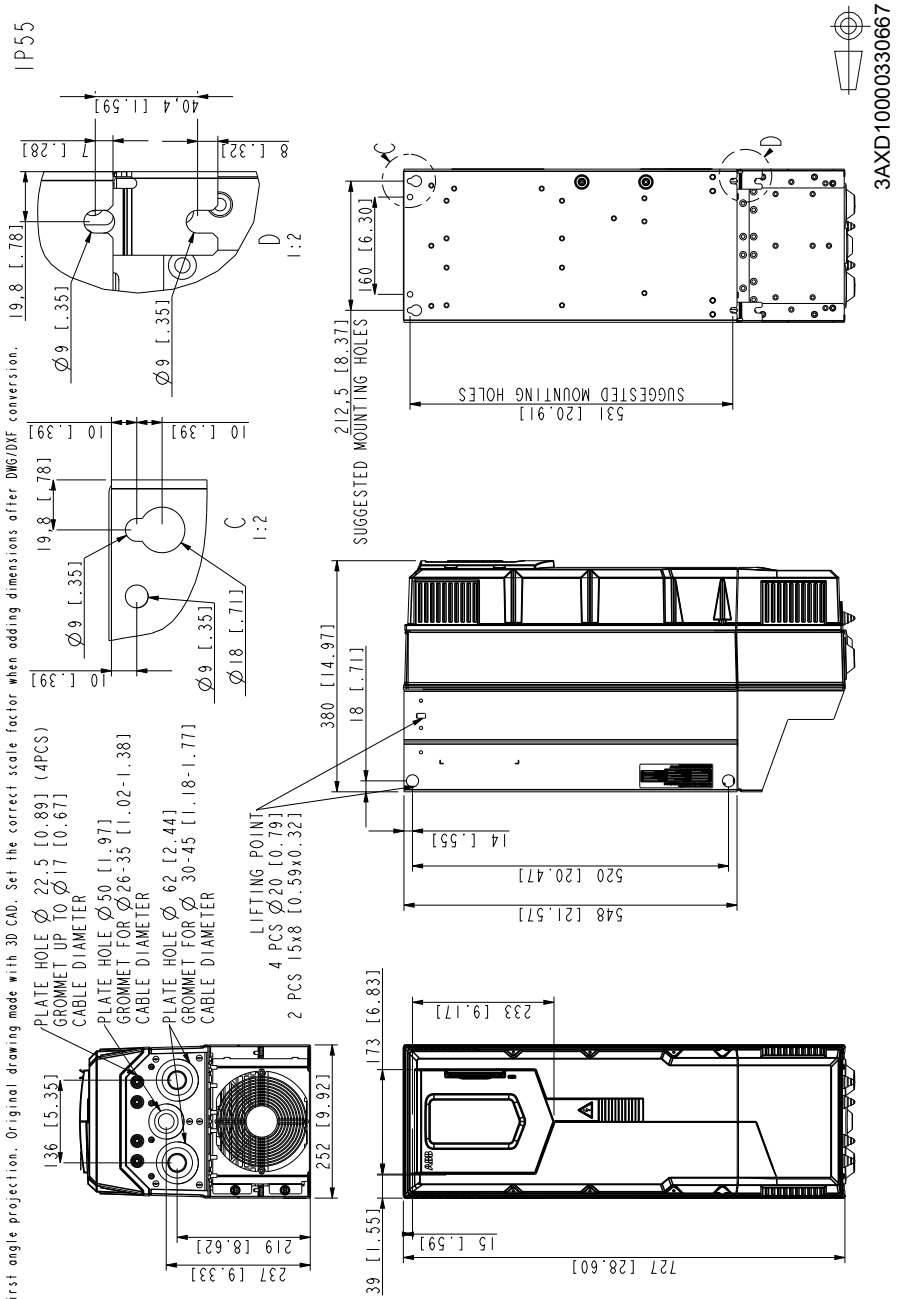

Frame R7, IP21 (UL Type 1)

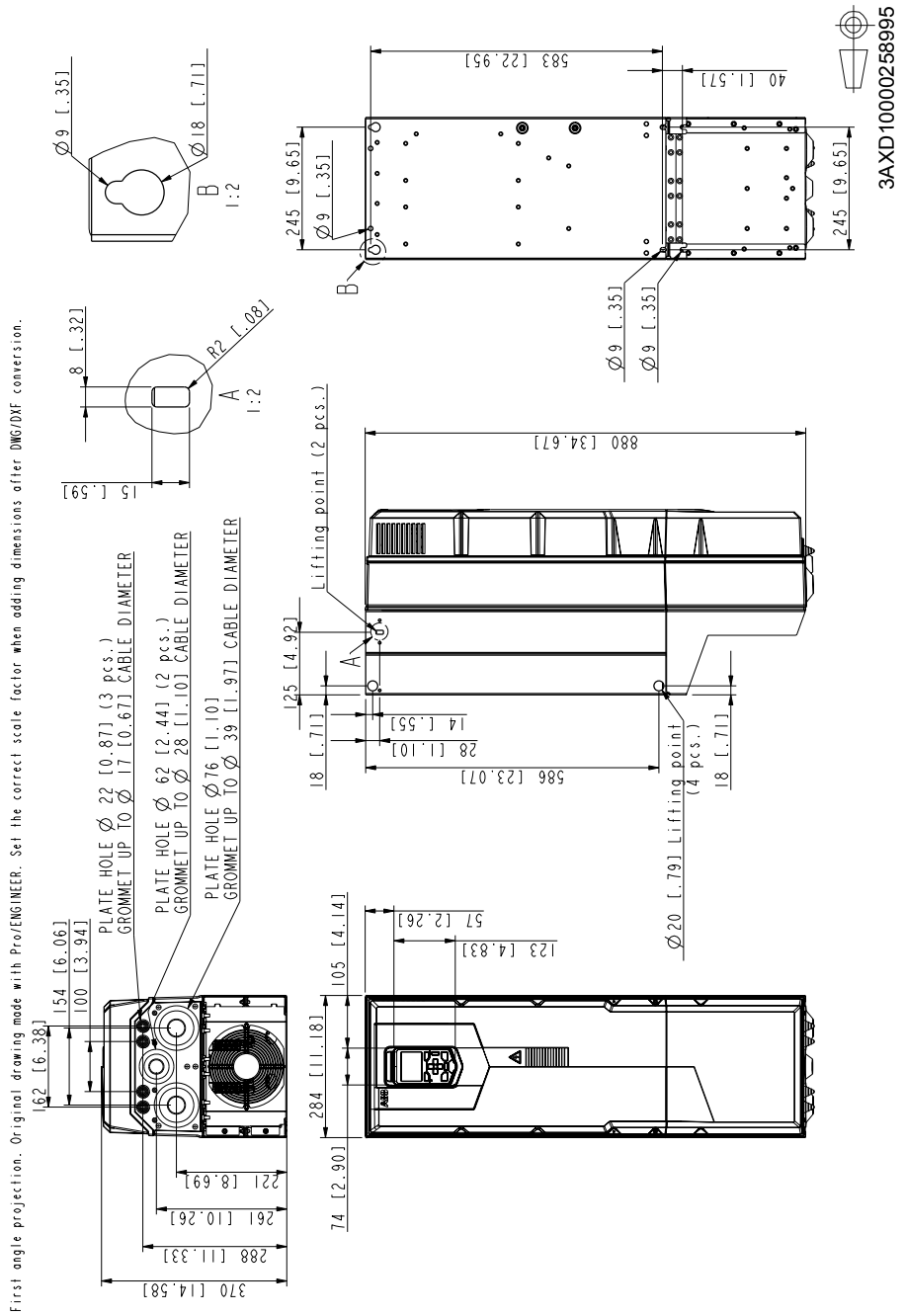

Frame R7, IP55 (UL Type 12)

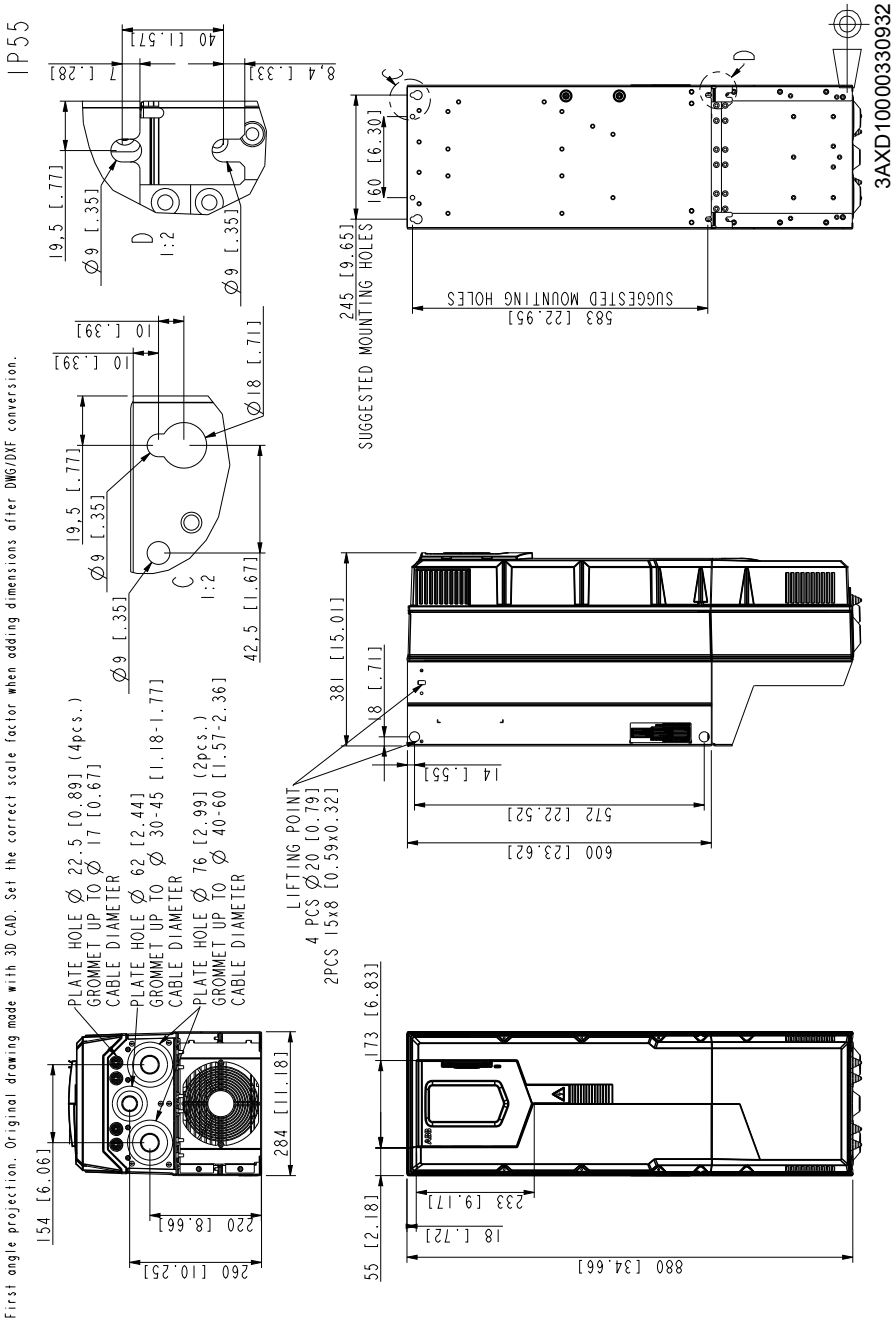

Frame R8, IP21 (UL Type 1)

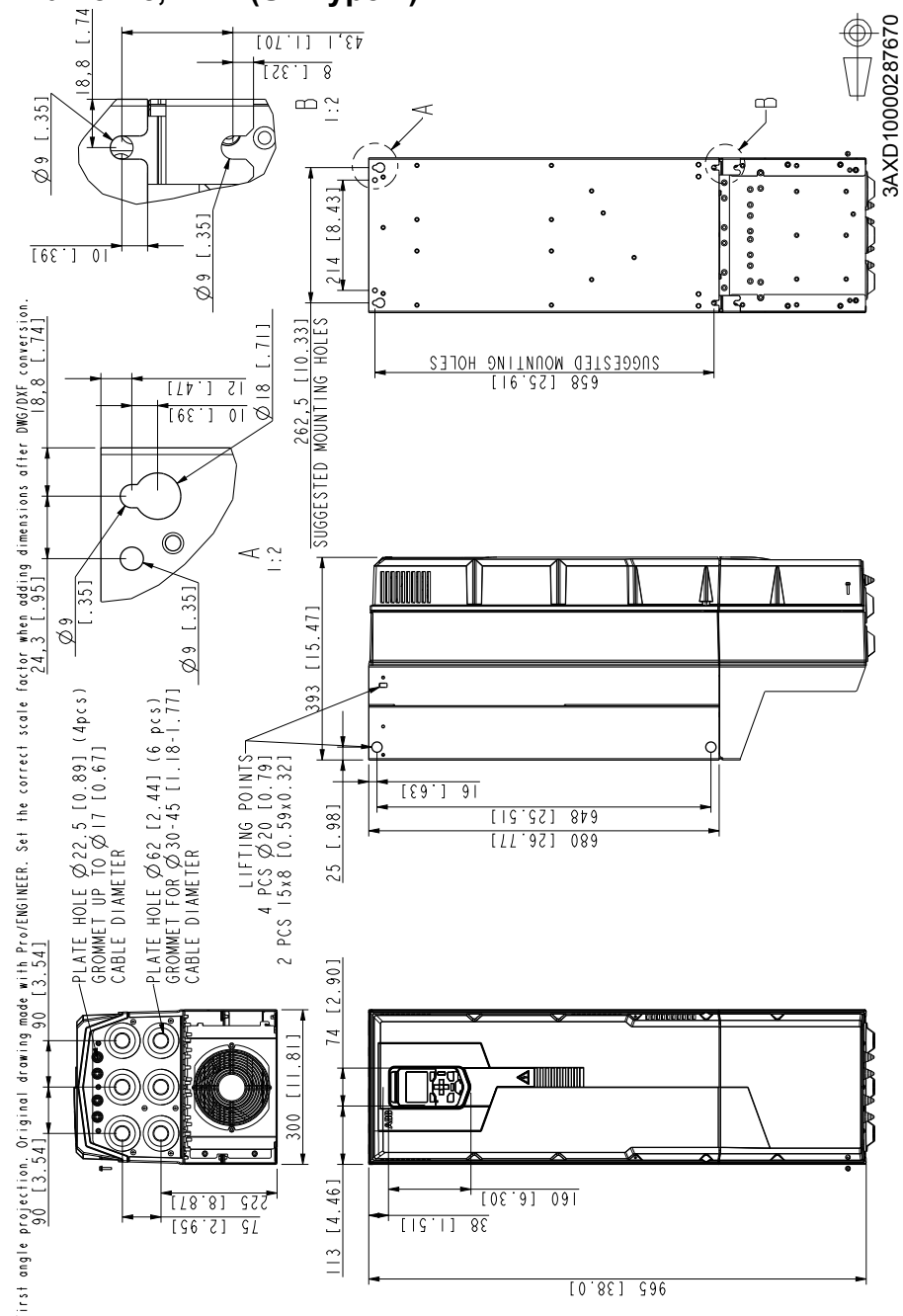

Frame R8, IP55 (UL Type 12)

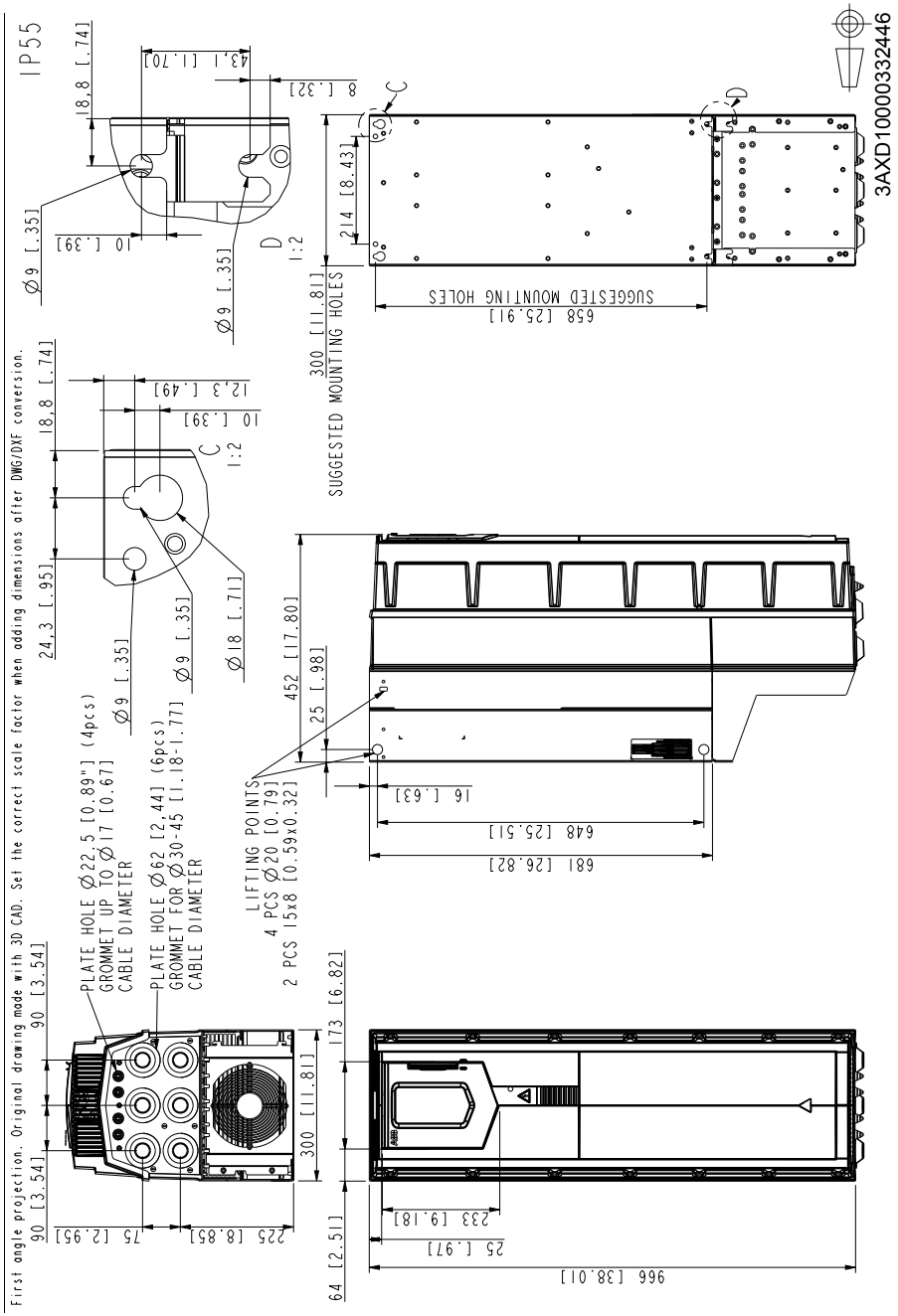

Frame R9, IP21 (UL Type 1)

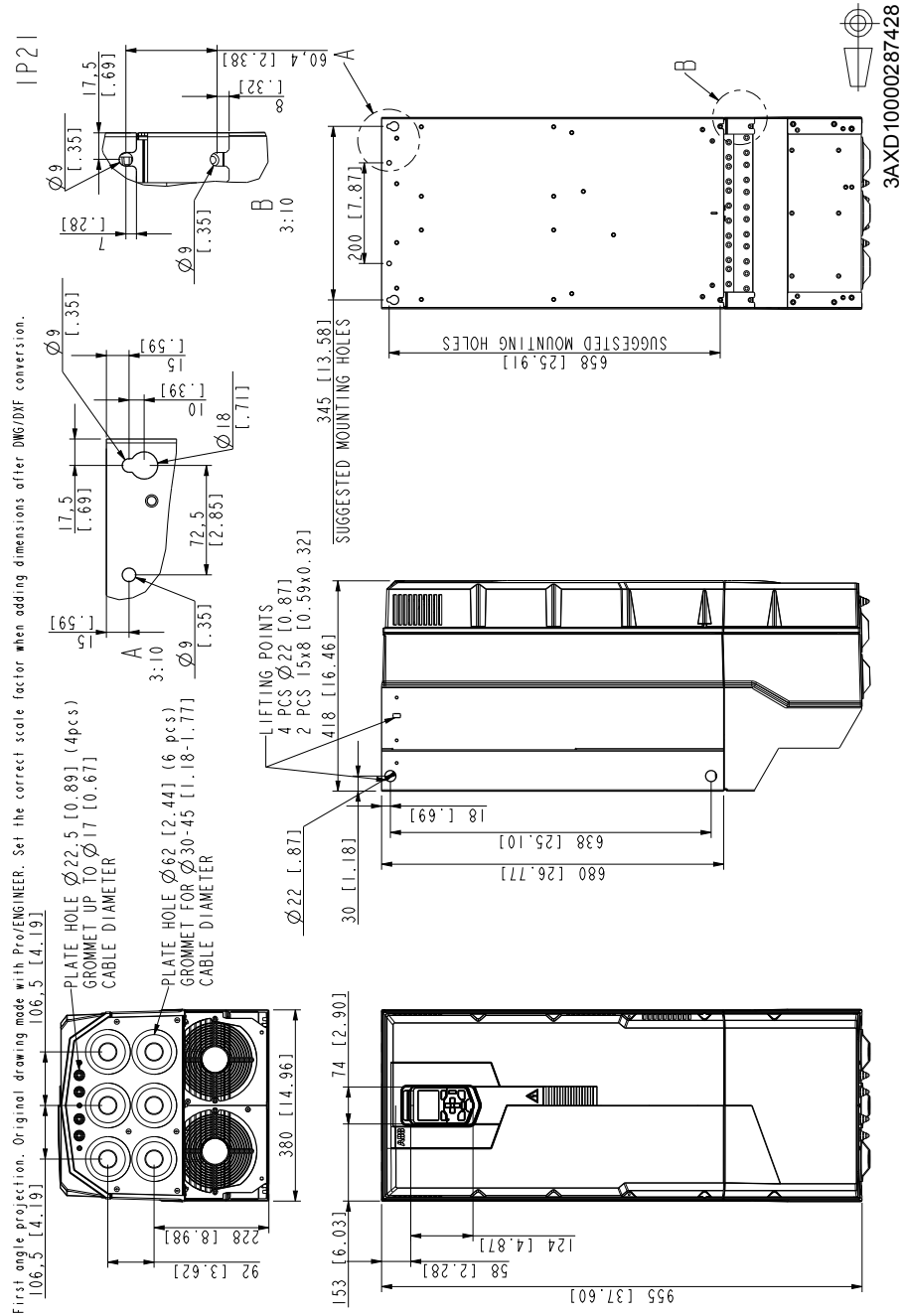

Frame R9, IP55 (UL Type 12)

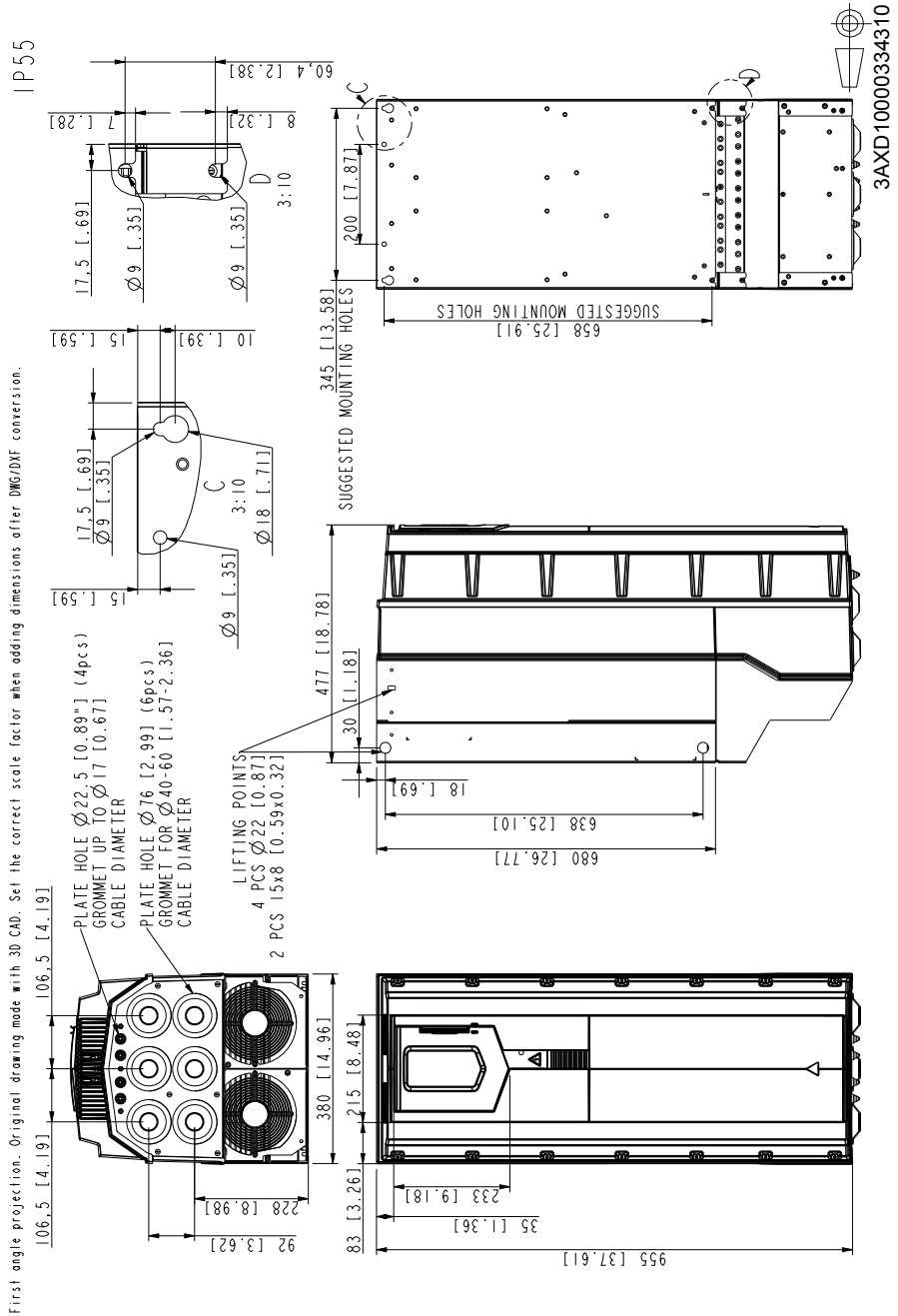

11

Resistor braking

Contents of this chapter

The chapter describes how to select the brake resistor and cables, protect the system, connect the brake resistor and enable resistor braking.

Operation principle and hardware description

The brake chopper handles the energy generated by a decelerating motor. The chopper connects the brake resistor to the intermediate DC circuit whenever the voltage in the circuit exceeds the limit defined by the control program. Energy consumption by the resistor losses lowers the voltage until the resistor can be disconnected.

For frame R0…R3 internal brake choppers and resistors, see below. For R4…R9 external brake choppers and resistors, see *Resistor braking, frames R4…R9* on page *214*.

Resistor braking, frames R0…R3

Planning the braking system

Selecting the brake resistor

Frames R0…R3 have an built-in brake chopper as standard equipment. The brake resistor is selected using the table and equations presented in this section.

1. Determine the required maximum braking power P_{Rmax} for the application. P_{Rmax} must be smaller than P_{BRmax} given in the table on page *209* for the used drive type.
2. Calculate resistance R with Equation 1.
3. Calculate energy E_{Rpulse} with Equation 2.
4. Select the resistor so that the following conditions are met:
   - The rated power of the resistor must be greater than or equal to P_{Rmax}.
   - Resistance R must be between R_{min} and R_{max} given in the table for the used drive type.
   - The resistor must be able to dissipate energy E_{Rpulse} during the braking cycle T.

Equations for selecting the resistor:

Eq. 1. $U_N = 400\text{ V}$: $R = \dfrac{450000}{P_{Rmax}}$

$U_N = 480\text{ V}$: $R = \dfrac{615000}{P_{Rmax}}$

Eq. 2. $E_{Rpulse} = P_{Rmax} \cdot t_{on}$

Eq. 3. $P_{Rave} = P_{Rmax} \cdot \dfrac{t_{on}}{T}$

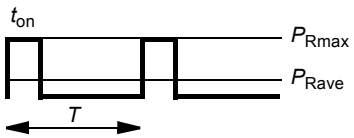

For conversion, use 1 hp = 746 W.

where

R = calculated brake resistor value (ohm). Make sure that: $R_{min} < R < R_{mxx}$.
P_{Rmax} = maximum power during the braking cycle (W)
P_{Rave} = average power during the braking cycle (W)
E_{Rpulse} = energy conducted into the resistor during a single braking pulse (J)
t_{on} = length of the braking pulse (s)
T = length of the braking cycle (s).

The table shows reference resistor types for the maximum braking power.

Type ACH580-01	R_{min}	R_{max}	P_{BRmax}		Reference resistor types
	ohm	ohm	kW	hp	Danotherm
3-phase U_N = 400 or 480 V (380…415 V, 440…480 V)					
0246-4	52	864	0.6	0.8	CBH 360 C T 406 210R
03A3-4	52	582	0.9	1.2	CBH 360 C T 406 210R
04A0-4	52	392	1.4	1.9	CBH 360 C T 406 210R
05A6-4	52	279	2.0	2.7	CBH 360 C T 406 210R
07A2-4	52	191	2.9	3.9	CBR-V 330 D T 406 78R UL
09A4-4	52	140	3.9	5.2	CBR-V 330 D T 406 78R UL
12A6-4	52	104	5.3	7.1	CBR-V 330 D T 406 78R UL
017A-4	31	75	7.3	9.8	CBR-V 560 D HT 406 39R UL
025A-4	22	52	10	13.6	CBR-V 560 D HT 406 39R UL
032A-4	16	37	15	20.1	CBT-H 560 D HT 406 19R
038A-4	10	27	20	26.8	CBT-H 760 D HT 406 16R
045A-4	10	22	25	33.5	CBT-H 760 D HT 406 16R

3AXD00000586715.xls H

Symbols

R_{min} = minimum allowed brake resistor that can be connected to the brake chopper
R_{max} = maximum allowed brake resistor that allows P_{BRmax}
P_{BRmax} = maximum braking capacity of the drive, must exceed the desired braking power.

WARNING! Do not use a brake resistor with a resistance below the minimum value specified for the particular drive. The drive and the internal chopper are not able to handle the overcurrent caused by the low resistance.

Selecting and routing the brake resistor cables

Use a shielded cable with the conductor size specified in section *Terminal and lead-through data for the power cables* on page *161*.

Minimizing electromagnetic interference

Follow these rules in order to minimize electromagnetic interference caused by the rapid current changes in the resistor cables:

- Install the cables away from other cable routes.
- Avoid long parallel runs with other cables. The minimum parallel cabling separation distance should be 0.3 meters.
- Cross the other cables at right angles.
- Keep the cable as short as possible in order to minimize the radiated emissions and stress on chopper IGBTs. The longer the cable the higher the radiated emissions, inductive load and voltage peaks over the IGBT semiconductors of the brake chopper.

Maximum cable length

The maximum length of the resistor cable(s) is 10 m (33 ft).

EMC compliance of the complete installation

Note: ABB has not verified that the EMC requirements are fulfilled with external user-defined brake resistors and cabling. The EMC compliance of the complete installation must be considered by the customer.

Placing the brake resistor

Install the resistors outside the drive in a place where they will cool.

Arrange the cooling of the resistor in a way that:

- no danger of overheating is caused to the resistor or nearby materials
- the temperature of the room the resistor is located in does not exceed the allowed maximum.

Supply the resistor with cooling air/water according to the resistor manufacturer's instructions.

WARNING! The materials near the brake resistor must be non-flammable. The surface temperature of the resistor is high. Air flowing from the resistor is of hundreds of degrees Celsius. If the exhaust vents are connected to a ventilation system, ensure that the material withstands high temperatures. Protect the resistor against physical contact.

Protecting the system in brake circuit fault situations

Protecting the system in cable and brake resistor short-circuit situations

The input fuses will also protect the resistor cable when it is identical with the input cable.

Protecting the system against thermal overload

Equipping the drive with a main contactor is highly recommended for safety reasons. Wire the contactor so that it opens in case the resistor overheats. This is essential for safety since the drive will not otherwise be able to interrupt the main supply if the chopper remains conductive in a fault situation. An example wiring diagram is shown below. We recommend that you use resistors equipped with a thermal switch (1) inside the resistor assembly. The switch indicates overtemperature and overload.

We recommend that you also wire the thermal switch to a digital input of the drive.

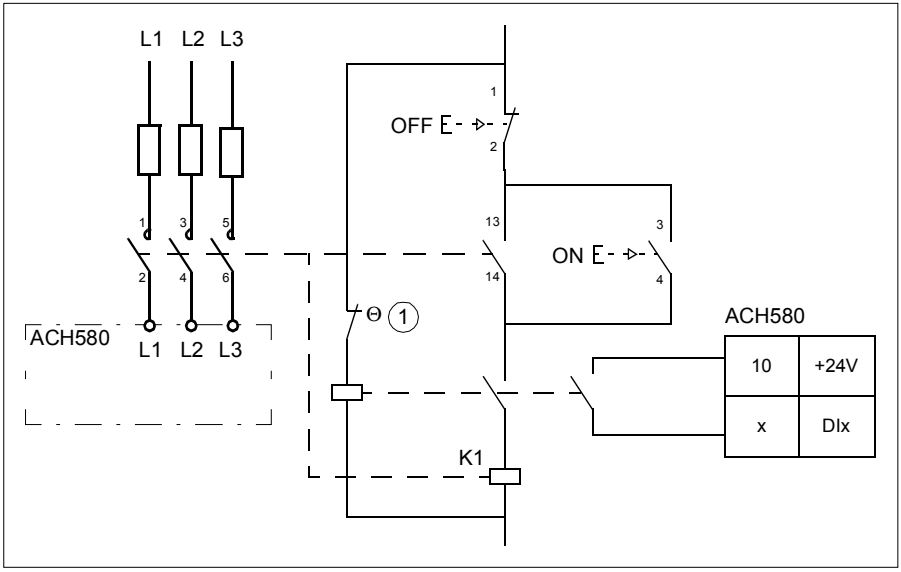

Mechanical installation

All brake resistors must be installed outside the drive. Follow the resistor manufacturer's instructions.

Electrical installation

Checking the insulation of the assembly

Follow the instructions given in section *Brake resistor assembly for R0…R3* on page *Brake resistor assembly for R0…R3*.

Connection diagram

See section *Connection diagram* page *80*.

Connection procedure

See section *Brake resistor cable (if used)* on page *86*.

Connect the thermal switch of the brake resistor as described in section *Protecting the system against thermal overload* on page *211*.

Start-up

Note: Protective oil on the brake resistors will burn off when the brake resistor is used for the first time. Make sure that the airflow is sufficient.

Set the following parameters:

1. Disable the overvoltage control of the drive with parameter 30.30 Overvoltage control.
2. Set the source of parameter 31.01 External event 1 source to point to the digital input where the thermal switch of the brake resistor is wired.
3. Set parameter 31.02 External event 1 type to Fault.
4. Enable the brake chopper by parameter 43.06 Brake chopper enable. If Enabled with thermal model is selected, set also the brake resistor overload protection parameters 43.08 and 43.09 according to the application.
5. Check the resistance value of parameter 43.10 Brake resistance.

With these parameter settings, the drive generates a fault and coasts to a stop on brake resistor overtemperature.

WARNING! If the drive is equipped with a brake chopper but the chopper is not enabled by the parameter setting, the internal thermal protection of the drive against resistor overheating is not in use. In this case, the brake resistor must be disconnected.

Resistor braking, frames R4…R9

Planning the braking system

Frames R4…R9 need external brake choppers and resistors. The table below lists suitable choppers and resistors. Other resistors can also be used as long as the minimum resistance value and required power values are met.

For more information, see *NBRA-6xx Braking Choppers Installation and start-up guide* (3AFY58920541 [English]) and *ACS-BRK Brake Units Installation and start-up guide* (3AFY61514309 [English]).

Type ACH580-01	Brake chopper	R_{min}	R_{max}	P_{BRmax}		Reference resistor types
		ohm	ohm	kW	hp	
3-phase U_N = 400 or 480 V (380…415 V, 440…480 V)						
062A-4	ACS-BRK-D	7.8	18.1	30	40.2	Built in with the brake chopper
073A-4	ACS-BRK-D	7.8	13.1	42	56.3	Built in with the brake chopper
088A-4	ACS-BRK-D	7.8	10.7	51	68.4	Built in with the brake chopper
106A-4	NBRA-658	1.3	8.7	63	84.5	SAFUR125F500
145A-4	NBRA-658	1.3	7.1	77	103.2	SAFUR125F500
169A-4	NBRA-658	1.3	5.2	105	140.8	SAFUR200F500
206A-4	NBRA-658	1.3	4.3	126	168.9	SAFUR200F500
246A-4	NBRA-658	1.3	3.5	156	209.1	2xSAFUR125F500
293A-4	NBRA-658	1.3	2.9	187	250.7	2xSAFUR210F575
363A-4	NBRA-659	0.7	2.4	227	304.3	2xSAFUR200F500
430A-4	NBRA-659	0.7	1.9	284	380.7	2xSAFUR200F500

3AXD10000395897.xls E

Symbols

R_{min} = minimum allowed brake resistor that can be connected to the brake chopper
R_{max} = maximum allowed brake resistor that allows P_{BRmax}
P_{BRmax} = maximum braking capacity of the drive, must exceed the desired braking power.

12

Safe torque off function

What this chapter contains

This chapter describes the Safe torque off (STO) function of the drive and gives instructions for its use.

Description

The Safe torque off function can be used, for example, to construct safety or supervision circuits that stop the drive in case of danger. Another possible application is a prevention of unexpected start-up switch that enables short-time maintenance operations like cleaning or work on non-electrical parts of the machinery without switching off the power supply to the drive.

Note: The Safe torque off function does not disconnect the voltage from the drive, see the warning on page *222*.

When activated, the Safe torque off function disables the control voltage of the power semiconductors of the drive output stage (A, see diagram on page *217*), thus preventing the drive from generating the torque required to rotate the motor. If the motor is running when Safe torque off is activated, it coasts to a stop.

The Safe torque off function has a redundant architecture, that is, both channels must be used in the safety function implementation. The safety data given in this manual is calculated for redundant use, and does not apply if both channels are not used.

The Safe torque off function of the drive complies with these standards:

Standard	Name
EN 60204-1:2006 + A1: 2009 + AC:2010	*Safety of machinery – Electrical equipment of machines – Part 1: General requirements*
IEC 61326-3-1:2008	*Electrical equipment for measurement, control and laboratory use – EMC requirements – Part 3-1: Immunity requirements for safety-related systems and for equipment intended to perform safety-related functions (functional safety) – General industrial applications*
IEC 61508-1:2010	*Functional safety of electrical/electronic/programmable electronic safety-related systems – Part 1: General requirements*
IEC 61508-2:2010	*Functional safety of electrical/electronic/programmable electronic safety-related systems – Part 2: Requirements for electrical/electronic/programmable electronic safety-related systems*
IEC 61511:2003	*Functional safety – Safety instrumented systems for the process industry sector*
IEC/EN 61800-5-2:2007	*Adjustable speed electrical power drive systems – Part 5-2: Safety requirements – Functional*
IEC/EN 62061:2005 + A1:2013	*Safety of machinery – Functional safety of safety-related electrical, electronic and programmable electronic control systems*
EN ISO 13849-1:2008 + AC:2009	*Safety of machinery – Safety-related parts of control systems – Part 1: General requirements*
EN ISO 13849-2:2012	*Safety of machinery – Safety-related parts of control systems – Part 2: Validation*

The function also corresponds to Prevention of unexpected start-up as specified by EN 1037:1995 + A1:2008 and Uncontrolled stop (stop category 0) as specified in EN 60204-1:2006 + AC:2010.

Compliance with the European Machinery Directive

See section *Compliance with the European Machinery Directive 2006/42/EC 2nd Edition – June 2010* on page 179.

Connection principle

Connection with internal +24 V DC power supply

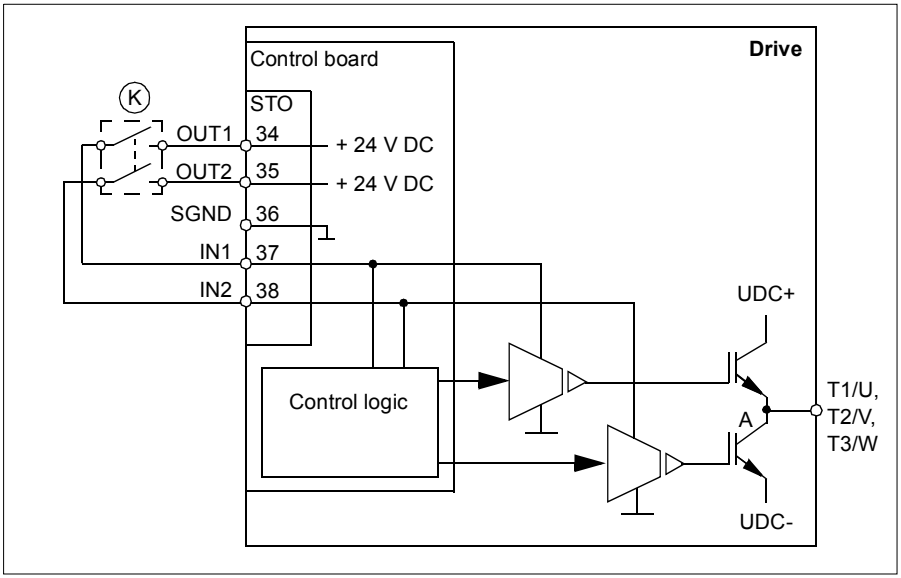

Connection with external +24 V DC power supply

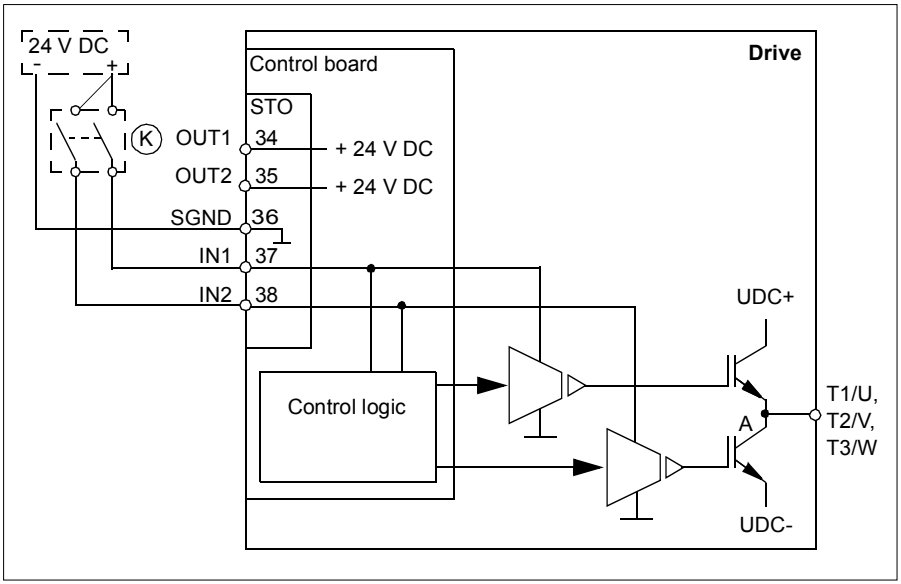

Wiring examples

An example of a Safe torque off wiring with internal +24 V DC power supply is shown below.

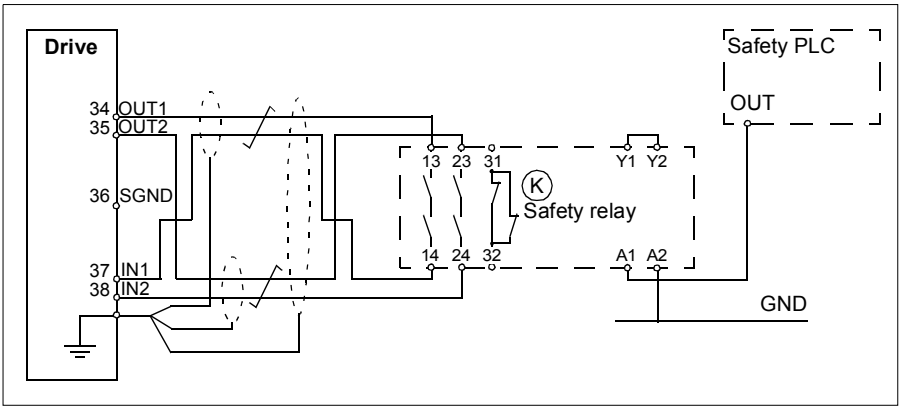

An example of a Safe torque off wiring with external +24 V DC power supply is shown below.

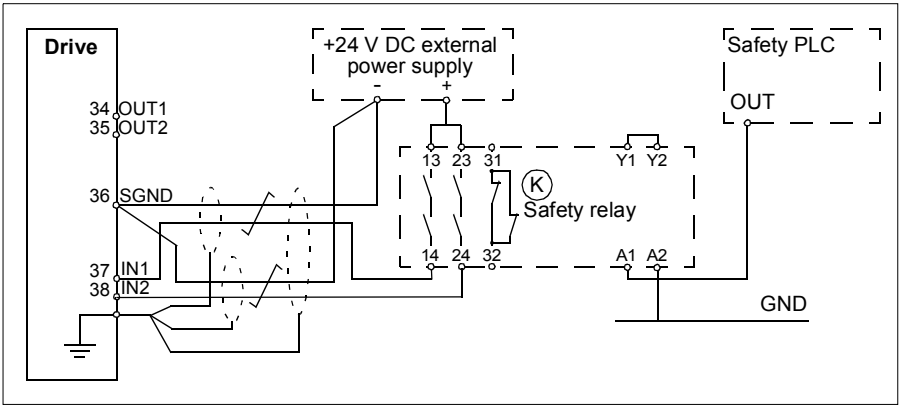

For information on the specifications of the STO input, see chapter *Control connection data* (page *169*).

Activation switch

In the wiring diagram above (page *218*), the activation switch has the designation (K). This represents a component such as a manually operated switch, an emergency stop push button switch, or the contacts of a safety relay or safety PLC.

- If a manually operated activation switch is used, the switch must be of a type that can be locked out to the open position.
- Inputs IN1 and IN2 must open/close within 200 ms of each other.

Cable types and lengths

- Double-shielded twisted-pair cable is recommended.
- Maximum cable length 300 m (984 ft) between activation switch (K) and drive control board.

Note: A short-circuit in the wiring between the switch and an STO terminal causes a dangerous fault and therefore it is recommended to use a safety relay (including wiring diagnostics), or a wiring method (shield grounding, channel separation) which reduces or eliminates the risk caused by the short-circuit.

Note: The voltage at the INx terminals of each drive must be at least 13 V DC to be interpreted as “1”. Pulse tolerance of input channels is 1 ms.

Grounding of protective shields

- Ground the shield in the cabling between the activation switch and the control board at the control board.
- Ground the shield in the cabling between two control boards at one control board only.

Operation principle

1. The Safe torque off activates (the activation switch is opened, or safety relay contacts open).
2. The STO inputs IN1 and IN2 on the drive control board de-energize.
3. The STO cuts off the control voltage from the drive IGBTs.
4. The control program generates an indication as defined by parameter 31.22 STO indication run/stop.

   The parameter selects which indications are given when one or both Safe torque off (STO) signals are switched off or lost. The indications also depend on whether the drive is running or stopped when this occurs.

   Note: This parameter does not affect the operation of the STO function itself. The STO function will operate regardless of the setting of this parameter: a running drive will stop upon removal of one or both STO signals, and will not start until both STO signals are restored and all faults reset.

   Note: The loss of only one STO signal always generates a fault as it is interpreted as a malfunction of STO hardware or wiring.
5. Motor coasts to a stop (if running). The drive cannot restart while the activation switch or safety relay contacts are open. After the contacts close, a new start command is required to start the drive.

Start-up including acceptance test

To ensure the safe operation of a safety function, validation is required. The final assembler of the machine must validate the function by performing an acceptance test. The acceptance test must be performed

- at initial start-up of the safety function
- after any changes related to the safety function (circuit boards, wiring, components, settings, etc.)
- after any maintenance work related to the safety function.

Authorized person

The acceptance test of the safety function must be carried out by an authorized person with expertise and knowledge of the safety function. The test must be documented and signed by the authorized person.

An authorized person is an individual with authorization from the machine builder or end user to carry out, report and sign off the safety function validation / acceptance testing on behalf of the machine builder or end user.

Acceptance test reports

Signed acceptance test reports must be stored in the logbook of the machine. The report shall include documentation of start-up activities and test results, references to failure reports and resolution of failures. Any new acceptance tests performed due to changes or maintenance shall be logged into the logbook.

Acceptance test procedure

After wiring the Safe torque off function, validate its operation as follows.

Action	☑
WARNING! Follow the *Safety instructions*, page *13*. Ignoring the instructions can cause physical injury or death, or damage to the equipment.	☐
Ensure that the drive can be run and stopped freely during start-up.	☐
Stop the drive (if running), switch the input power off and isolate the drive from the power line by a disconnector.	☐
Check the Safe torque off circuit connections against the wiring diagram.	☐
Close the disconnector and switch the power on.	☐
Test the operation of the STO function when the motor is stopped. • Give a stop command for the drive (if running) and wait until the motor shaft is at a standstill. Ensure that the drive operates as follows: • Open the STO circuit. The drive generates an indication if one is defined for the 'stopped' state in parameter 31.22 STO indication run/stop. For the description of the warning, see *ACH580 HVAC control program firmware manual* (3AXD50000027537 [English]). • Give a start command to verify that the STO function blocks the drive's operation. The drive displays a warning. The motor should not start. • Close the STO circuit. • Reset any active faults. Restart the drive and check that the motor runs normally.	☐
Test the operation of the STO function when the motor is running. • Start the drive and ensure the motor is running. • Open the STO circuit. The motor should stop. The drive generates an indication if one is defined for the 'running' state in parameter 31.22 STO indication run/stop. For the description of the warning, see *ACH580 HVAC control program firmware manual* (3AXD50000027537 [English]). • Reset any active faults and try to start the drive. • Ensure that the motor stays at a standstill and the drive operates as described above in testing the operation when the motor is stopped. • Close the STO circuit. • Reset any active faults. Restart the drive and check that the motor runs normally.	☐
Document and sign the acceptance test report which verifies that the safety function is safe and accepted for operation.	☐

Use

1. Open the activation switch, or activate the safety functionality that is wired to the STO connection.
2. STO inputs on the drive control board de-energize, and the drive control board cuts off the control voltage from the drive IGBTs.
3. The control program generates an indication as defined by parameter 31.22 STO indication run/stop.
4. The motor coasts to a stop (if running). The drive will not restart while the activation switch or safety relay contacts are open.
5. Deactivate the STO by closing the activation switch, or resetting the safety functionality that is wired to the STO connection.
6. Reset any faults before restarting.

WARNING! The Safe torque off function does not disconnect the voltage of the main and auxiliary circuits from the drive. Therefore maintenance work on electrical parts of the drive or the motor can only be carried out after isolating the drive from the main supply.

WARNING! (With permanent magnet motors or synchronous reluctance [SynRM] motors only). In case of a multiple IGBT power semiconductor failure, the drive system can produce an alignment torque which maximally rotates the motor shaft by 180/*p* degrees (with permanent magnet motors) or 180/2*p* degrees (with synchronous reluctance [SynRM] motors) regardless of the activation of the Safe torque off function. *p* denotes the number of pole pairs.

Notes:

- If a running drive is stopped by using the Safe torque off function, the drive will cut off the motor supply voltage and the motor will coast to a stop. If this causes danger or is not otherwise acceptable, stop the drive and machinery using the appropriate stop mode before activating the Safe torque off function.
- The Safe torque off function overrides all other functions of the drive unit.
- The Safe torque off function is ineffective against deliberate sabotage or misuse.
- The Safe torque off function has been designed to reduce the recognized hazardous conditions. In spite of this, it is not always possible to eliminate all potential hazards. The assembler of the machine must inform the final user about the residual risks.

Maintenance

After the operation of the circuit is validated at start-up, the STO function shall be maintained by periodic proof testing. In high demand mode of operation, the maximum proof test interval is 20 years. In low demand mode of operation, the maximum proof test interval is 2 years. The test procedure is given in section *Acceptance test procedure* (page *221*).

In addition to proof testing, it is a good practice to check the operation of the function when other maintenance procedures are carried out on the machinery.

Include the Safe torque off operation test described above in the routine maintenance program of the machinery that the drive runs.

If any wiring or component change is needed after start up, or the parameters are restored, follow the test given in section *Acceptance test procedure* (page *221*).

Use only spare parts approved by ABB.

Fault tracing

The indications given during the normal operation of the Safe torque off function are selected by parameter 31.22 STO indication run/stop.

The diagnostics of the Safe torque off function cross-compare the status of the two STO channels. In case the channels are not in the same state, a fault reaction function is performed and the drive trips on an “STO hardware failure” fault. An attempt to use the STO in a non-redundant manner, for example activating only one channel, will trigger the same reaction.

See the drive firmware manual for the indications generated by the drive, and for details on directing fault and warning indications to an output on the control board for external diagnostics.

Any failures of the Safe torque off function must be reported to ABB.

Safety data

The safety data for the Safe torque off function is given below.

Note: The safety data is calculated for redundant use, and does not apply if both STO channels are not used.

Frame size	IEC 61508 and IEC/EN 61800-5-2					
	SIL	PFH_d (1/h)	HFT	SFF (%)	T1 (a)	PFD
R0	3	2.68E-09	1	99.8	20	2.23E-05
R1	3	2.68E-09	1	99.8	20	2.23E-05
R2	3	2.68E-09	1	99.8	20	2.23E-05
R3	3	2.68E-09	1	99.8	20	2.23E-05
R4	3	2.69E-09	1	99.8	20	2.23E-05
R5	3	2.69E-09	1	99.8	20	2.23E-05
R6	3	1.06E-09	1	99.8	20	9.26E-06
R7	3	1.06E-09	1	99.8	20	9.26E-06
R8	3	1.40E-09	1	99.7	20	1.09E-05
R9	3	1.40E-09	1	99.7	20	1.09E-05

Frame size	EN ISO 13849-1					IEC/EN 62061	IEC 61511
	PL	CCF (%)	$MTTF_d$ [1] (a)	DC [2] (%)	Category	SILCL	SIL
R0	e	80	2938	>90	3	3	3
R1	e	80	2938	>90	3	3	3
R2	e	80	2938	>90	3	3	3
R3	e	80	2934	>90	3	3	3
R4	e	80	2934	>90	3	3	3
R5	e	80	2934	>90	3	3	3
R6	e	80	10876	>90	3	3	3
R7	e	80	10876	>90	3	3	3
R8	e	80	2490	>90	3	3	3
R9	e	80	2490	>90	3	3	3

[1] 100 years must be used for calculation of a safety loop. 3AXD00000586715.xls H

[2] According to standard EN ISO 13849-1 table E.1

- The following temperature profile is used in safety value calculations:
  - 670 on/off cycles per year with $\triangle T$ = 71.66 °C
  - 1340 on/off cycles per year with $\triangle T$ = 61.66 °C
  - 30 on/off cycles per year with $\triangle T$ = 10.0 °C
  - 32 °C board temperature at 2.0% of time
  - 60 °C board temperature at 1.5% of time
  - 85 °C board temperature at 2.3% of time.

- The STO is a type A safety component as defined in IEC 61508-2.
- Relevant failure modes:
  - The STO trips spuriously (safe failure)
  - The STO does not activate when requested

  A fault exclusion on the failure mode “short circuit on printed circuit board” has been made (EN 13849-2, table D.5). The analysis is based on an assumption that one failure occurs at one time. No accumulated failures have been analyzed.
- STO reaction time (shortest detectable break): 1 ms
- STO response time: 2 ms (typical), 5 ms (maximum)
- Fault detection time: Channels in different states for longer than 200 ms
- Fault reaction time: Fault detection time + 10 ms
- STO fault indication (parameter 31.22) delay: < 500 ms
- STO warning indication (parameter 31.22) delay: < 1000 ms
- Maximum cable length 300 m (984 ft) between activation switch (K) and drive control board.
- The voltage at the INx terminals of each drive must be at least 13 V DC to be interpreted as “1”. Pulse tolerance of input channels is 1 ms.

Abbreviations

Abbr.	Reference	Description
CCF	EN ISO 13849-1	Common cause failure (%)
DC	EN ISO 13849-1	Diagnostic coverage
FIT	IEC 61508	Failure in time: 1E-9 hours
HFT	IEC 61508	Hardware fault tolerance
$MTTF_d$	EN ISO 13849-1	Mean time to dangerous failure: (The total number of life units) / (the number of dangerous, undetected failures) during a particular measurement interval under stated conditions
PFD	IEC 61508	Probability of failure on demand
PFH_D	IEC 61508	Probability of dangerous failures per hour
PL	EN ISO 13849-1	Performance level. Levels a…e correspond to SIL
SC	IEC 61508	Systematic capability
SFF	IEC 61508	Safe failure fraction (%)
SIL	IEC 61508	Safety integrity level (1…3)
SILCL	EN 62061	Maximum SIL (level 1…3) that can be claimed for a safety function or subsystem
STO	IEC/EN 61800-5-2	Safe torque off
T1	IEC 61508	Proof test interval

Declaration of conformity

Declaration of conformity (3AXD10000437229) is available on the Internet. See section *Document library on the Internet* on the inside of the back cover.

Certificate

TÜV certificate (3AXD10000470695) is available on the Internet. See section *Document library on the Internet* on the inside of the back cover.

13

Optional I/O extension modules

What this chapter contains

This chapter describes how to install and start up the optional CHDI-01, CMOD-01 and CMOD-02 multifunction extension modules. The chapter also contains diagnostics and technical data.

CHDI-01 115/230 V digital input extension module

Safety instructions

WARNING! Obey the safety instructions for the drive. If you ignore the safety instructions, injury or death can occur.

Hardware description

Product overview

The CHDI-01 115/230 V digital input extension module expands the inputs of the drive control board. It has six high voltage inputs and two relay outputs.

Layout

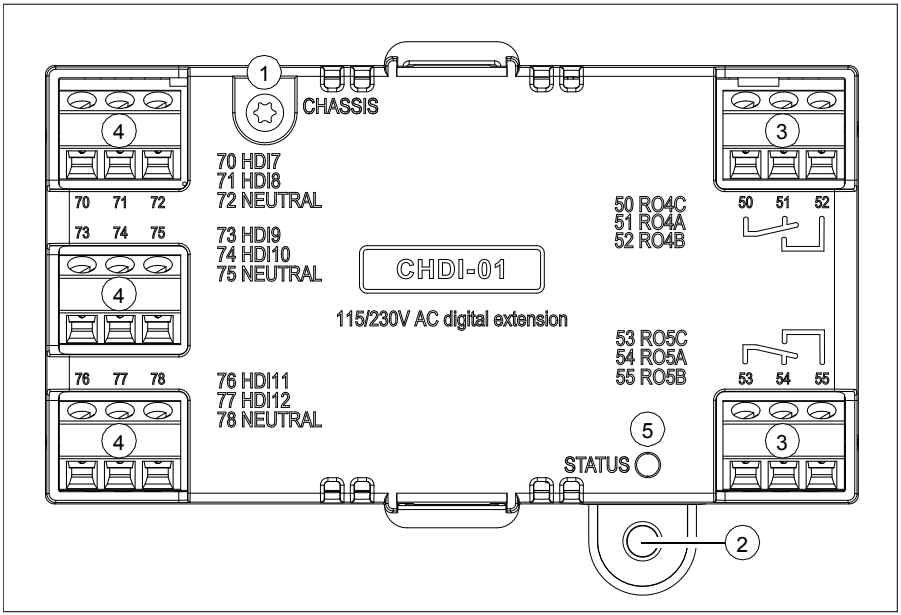

Item	Description	Additional information
1	Grounding screw	-
2	Hole for mounting screw	-
3	3-pin terminal blocks for relay outputs	Page 229
4	3-pin terminal block for 115/230 V inputs	Page 229
5	Diagnostic LED	Page 231

Mechanical installation

Necessary tools and instructions

- Screwdriver and a set of suitable bits.

Unpacking and checking the delivery

1. Open the option package.
2. Make sure that the package contains:
   - CHDI-01 high voltage digital extension module
   - mounting screw.
3. Make sure that there are no signs of damage.

Installing the module

See chapter *Installing option modules* on page *117*.

Electrical installation

Warnings

WARNING! Obey the instructions in chapter *Safety instructions* on page *13*. If you ignore them, injury or death, or damage to the equipment can occur. If you are not a qualified electrician, do not do electrical work.

Make sure that the drive is disconnected from the input power during installation. If the drive is already connected to the input power, wait for 5 minutes after disconnecting the input power.

Necessary tools and instructions

- Screwdriver and a set of suitable bits
- Cabling tools

Terminal designations

For more detailed information on the connectors, see section *Technical data* on page *240*.

Relay outputs

Marking		Description
50	RO4C	Common, C
51	RO4A	Normally closed, NC
52	RO4B	Normally open, NO
53	RO5C	Common, C
54	RO5A	Normally closed, NC
55	RO5B	Normally open, NO

115/230 V inputs

Marking		Description
70	HDI7	115/230 V input 1
71	HDI8	115/230 V input 2
72	NEUTRAL[1)]	Neutral point
73	HDI9	115/230 V input 3
74	HDI10	115/230 V input 4
75	NEUTRAL[1)]	Neutral point

Marking		Description
76	HDI11	115/230 V input 5
77	HDI12	115/230 V input 6
78	NEUTRAL[1)]	Neutral point

[1)] Neutral points 72, 75 and 78 are not connected. (Corrected 2016-05-03)

General cabling instructions

Obey the instructions given in chapter *Planning the electrical installation* on page *59*.

Wiring

Connect the external control cables to the applicable module terminals. Ground the outer shield of the cables 360 degrees under a grounding clamp on the grounding shelf of the control cables.

Relay output connection example

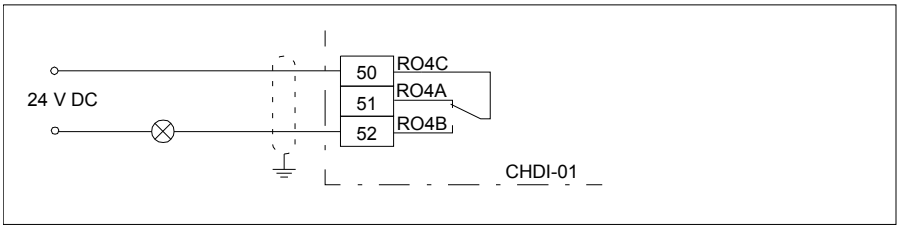

Digital input connection example

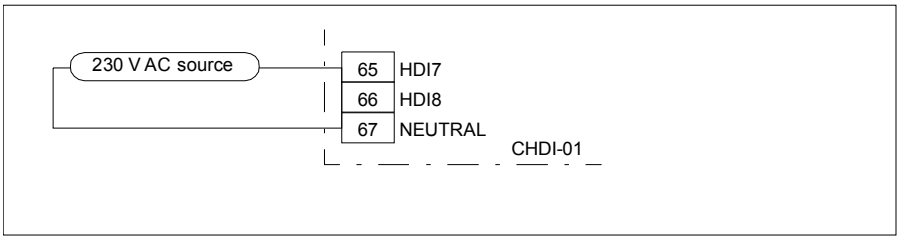

Start-up

Setting the parameters

1. Power up the drive.
2. If no warning is shown,
   - make sure that the value of both parameter 15.02 Detected extension module and parameter 15.01 Extension module type is CHDI-01.

   If warning A7AB Extension I/O configuration failure is shown,
   - make sure that the value of parameter 15.02 Detected extension module is CHDI-01.
   - set parameter 15.01 Extension module type to CHDI-01.

   You can now see the parameters of the extension module in parameter group 15 I/O extension module.
3. Set the parameters of the extension module to applicable values.

Parameter setting example for relay output

This example shows how make relay output RO4 of the extension module indicate the reverse direction of rotation of the motor with a one-second delay.

Parameter	Setting
15.07 RO4 source	Reverse
15.08 RO4 ON delay	1 s
15.09 RO4 OFF delay	1 s

Diagnostics

Faults and warning messages

Warning A7AB Extension I/O configuration failure.

LEDs

The extension module has one diagnostic LED.

Color	Description
Green	The extension module is powered up.

Technical data

Dimension drawing:

The dimensions are in millimeters and [inches].

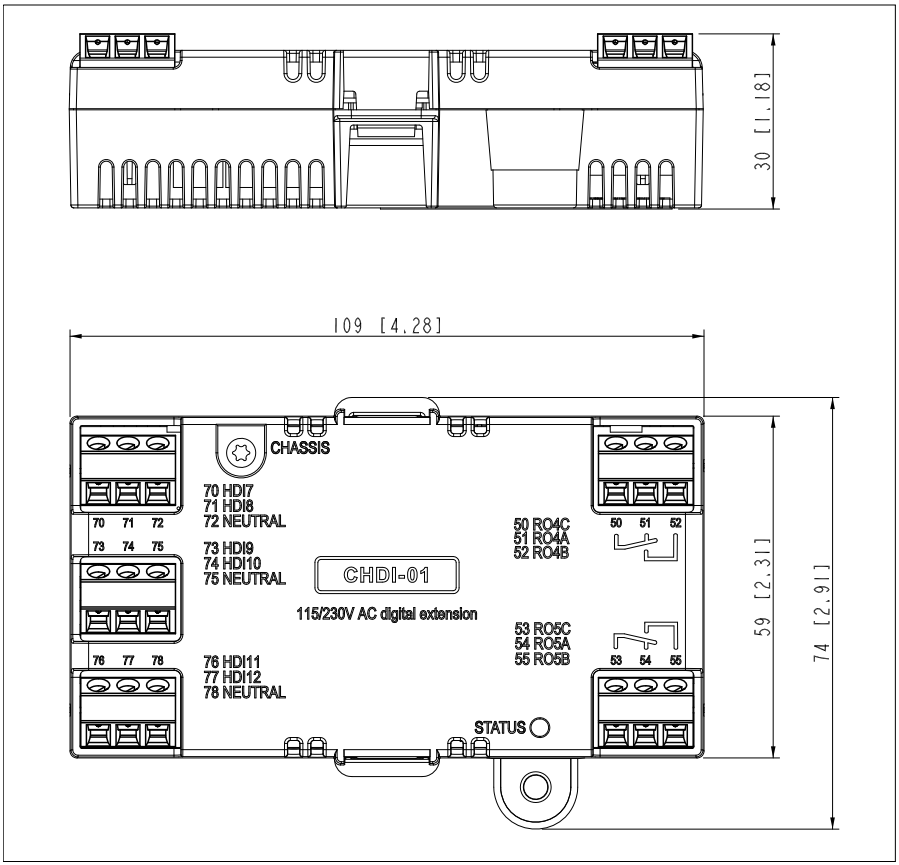

Installation: Into an option slot on the drive control board

Degree of protection: IP20

Ambient conditions: See the drive technical data.

Package: Cardboard

Isolation areas:

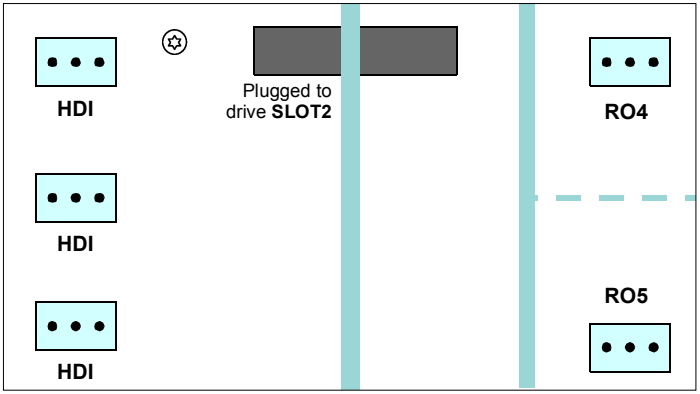

Symbol	Description
	Reinforced insulation (IEC 61800-5-1:2007)
	Functional insulation (IEC 61800-5-1:2007)

Relay outputs (50…52, 53…55):

- Wire size max. 1.5 mm^2
- Minimum contact rating: 12 V / 10 mA
- Maximum contact rating: 250 V AC / 30 V DC / 2 A
- Maximum breaking capacity: 1500 VA

115/230 V inputs (70…78):

- Wire size max. 1.5 mm^2
- Input voltage: 115 to 230 V AC ±10%
- Maximum current leakage in digital off state: 2 mA

CMOD-01 multifunction extension module (external 24 V AC/DC and digital I/O)

Safety instructions

WARNING! Obey the safety instructions for the drive. If you ignore the safety instructions, injury or death can occur.

Hardware description

Product overview

The CMOD-01 multifunction extension module (external 24 V AC/DC and digital I/O) expands the outputs of the drive control board. It has two relay outputs and one transistor output, which can function as a digital or frequency output.

In addition, the extension module has an external power supply interface, which can be used to power up the drive control board in case the drive power supply fails. If you do not need the back-up power supply, you do not have to connect it because the module is powered from the drive control board by default.

Note: In frames R6…R9, you do not need a CMOD-01 module to use external 24 V AC/DC supply. The external supply is connected directly to terminals 40 and 41 on the control board.

WARNING! Do not connect the +24 V AC cable to the control board ground when the control board is powered using an external 24 V AC supply.

Layout

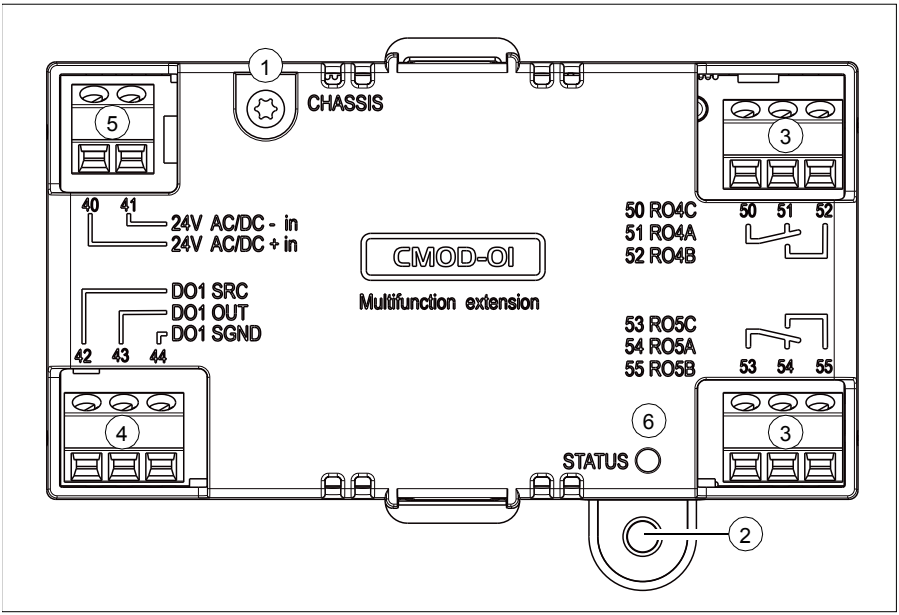

Item	Description	Additional information
1	Grounding screw	Page 235
2	Hole for mounting screw	Page 235
3	3-pin terminal blocks for relay outputs	Page 236
4	3-pin terminal block for transistor output	Page 236
5	2-pin terminal block for external power supply	Page 236
6	Diagnostic LED	Page 239

Mechanical installation

Necessary tools and instructions

- Screwdriver and a set of suitable bits.

Unpacking and checking the delivery

1. Open the option package.
2. Make sure that the package contains:
   - CMOD-01 multifunction extension module
   - mounting screw.
3. Make sure that there are no signs of damage.

Installing the module

See chapter *Installing option modules* on page *117*.

Electrical installation

Warnings

WARNING! Obey the instructions in chapter *Safety instructions* on page *13*. If you ignore them, injury or death, or damage to the equipment can occur. If you are not a qualified electrician, do not do electrical work.

Make sure that the drive is disconnected from the input power during installation. If the drive is already connected to the input power, wait for 5 minutes after disconnecting the input power.

Necessary tools and instructions

- Screwdriver and a set of suitable bits
- Cabling tools

Terminal designations

For more detailed information on the connectors, see section *Technical data* on page *240*.

Relay outputs

Marking		Description
50	RO4C	Common, C
51	RO4A	Normally closed, NC
52	RO4B	Normally open, NO
53	RO5C	Common, C
54	RO5A	Normally closed, NC
55	RO5B	Normally open, NO

Transistor output

Marking		Description
42	DO1 SRC	Source input
43	DO1 OUT	Digital or frequency output
44	DO1 SGND	Ground (earth) potential

External power supply

The external power supply is needed only if you want to connect an external back-up power supply for the drive control board.

Note: Frames R0…R5 need CMOD-01 for connecting external power supply, frames R6…R9 have corresponding terminals 40 and 41 on the control board.

Marking		Description
40	24V AC/DC + in	External 24 V (AC/DC) input
41	24V AC/DC - in	External 24 V (AC/DC) input

General cabling instructions

Obey the instructions given in chapter *Planning the electrical installation* on page *59*.

Wiring

Connect the external control cables to the applicable module terminals. Ground the outer shield of the cables 360 degrees under a grounding clamp on the grounding shelf of the control cables.

Relay output connection example

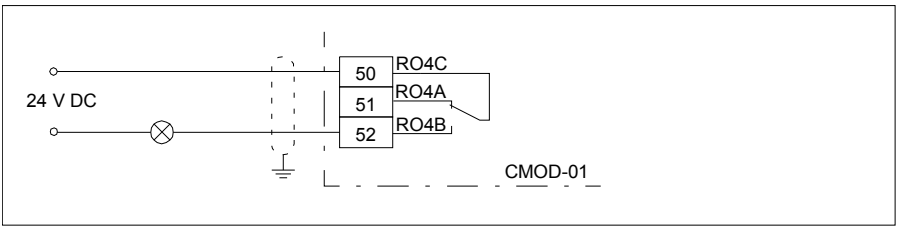

Digital output connection example

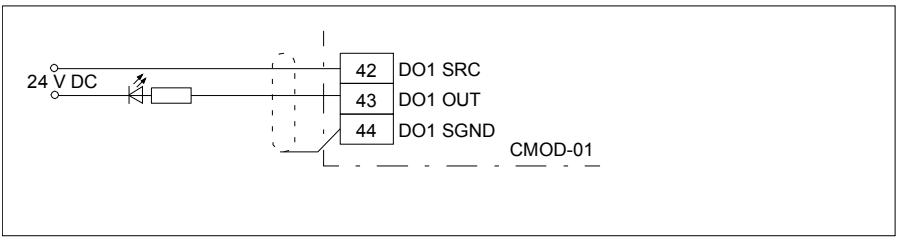

Frequency output connection example

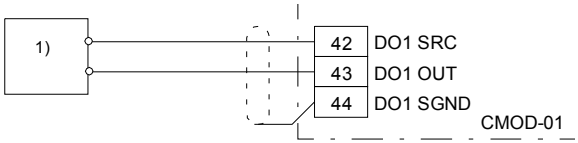

1) An externally supplied frequency indicator which provides, for example:

- a 40 mA / 12 V DC power supply for the sensor circuit (CMOD frequency output)
- suitable voltage pulse input (10 Hz … 16 kHz).

External power supply connection example

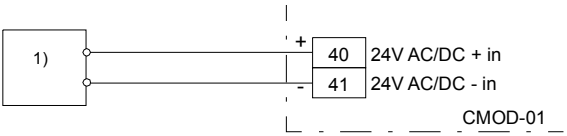

1) External power supply, 24 V AC/DC

WARNING! Do not connect the +24 V AC cable to the control board ground when the control board is powered using an external 24 V AC supply.

Start-up

Setting the parameters

1. Power up the drive.
2. If no warning is shown,
   - make sure that the value of both parameter 15.02 Detected extension module and parameter 15.01Extension module type is CMOD-01.

   If warning A7AB Extension I/O configuration failure is shown,
   - make sure that the value of parameter 15.02 Detected extension module is CMOD-01.
   - set parameter 15.01 Extension module type to CMOD-01.

   You can now see the parameters of the extension module in parameter group 15 I/O extension module.
3. Set the parameters of the extension module to applicable values.

Examples are given below.

Parameter setting example for relay output

This example shows how make relay output RO4 of the extension module indicate the reverse direction of rotation of the motor with a one-second delay.

Parameter	Setting
15.07 RO4 source	Reverse
15.08 RO4 ON delay	1 s
15.09 RO4 OFF delay	1 s

Parameter setting example for digital output

This example shows how to make digital output DO1 of the extension module indicate the reverse direction of rotation of the motor with a one-second delay.

Parameter	Setting
15.22 DO1 configuration	Digital output
15.23 DO1 source	Reverse
15.24 DO1 ON delay	1 s
15.25 DO1 OFF delay	1 s

Parameter setting example for frequency output

This example shows how to make digital output DO1 of the extension module indicate the motor speed 0... 1500 rpm with a frequency range of 0...10000 Hz.

Parameter	Setting
15.22 DO1 configuration	Frequency output
15.33 Freq out 1 source	01.01
15.34 Freq out 1 src min	0
15.35 Freq out 1 src max	1500.00
15.36 Freq out 1 at src min	1000 Hz
15.37 Freq out 1 at src max	10000 Hz

Diagnostics

Faults and warning messages

Warning A7AB Extension I/O configuration failure.

LEDs

The extension module has one diagnostic LED.

Color	Description
Green	The extension module is powered up.

Technical data

Dimension drawing:

The dimensions are in millimeters and [inches].

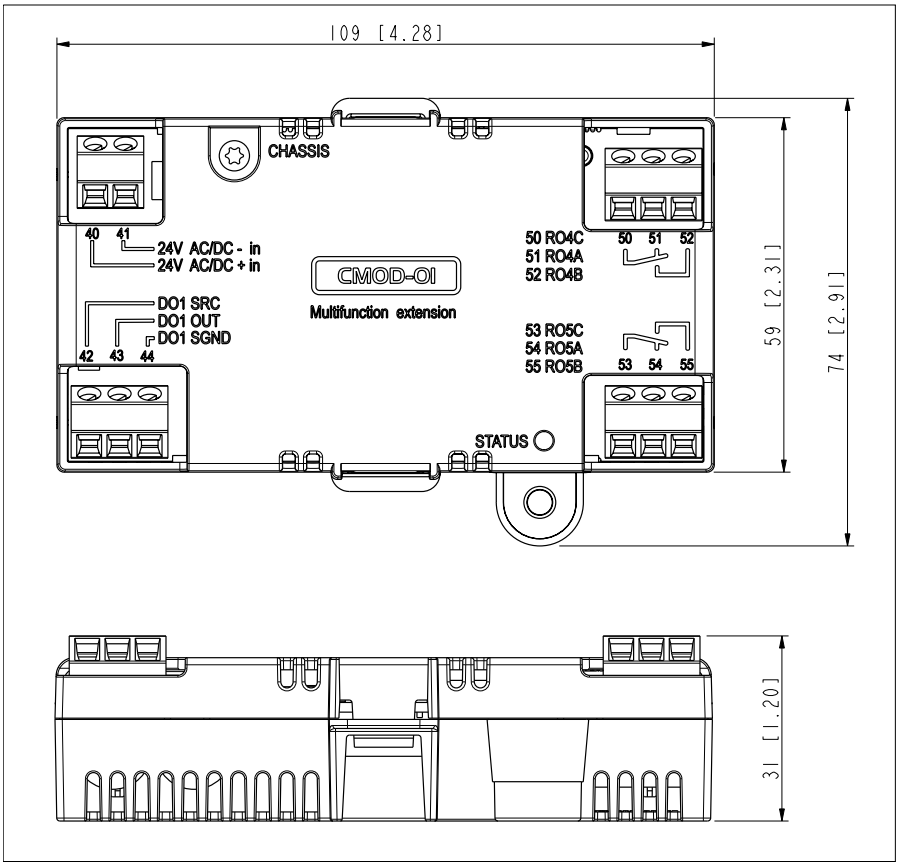

Installation: Into an option slot on the drive control board

Degree of protection: IP20

Ambient conditions: See the drive technical data.

Package: Cardboard

Isolation areas:

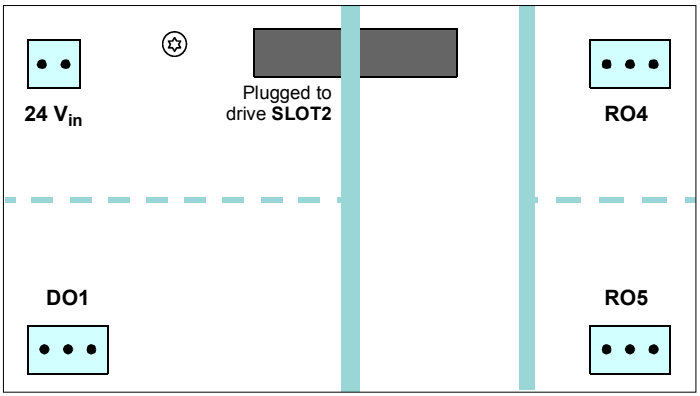

Symbol	Description
	Reinforced insulation (IEC 61800-5-1:2007)
	Functional insulation (IEC 61800-5-1:2007)

Relay outputs (50…52, 53…55):

- Wire size max. 1.5 mm^2
- Minimum contact rating: 12 V / 10 mA
- Maximum contact rating: 250 V AC / 30 V DC / 2 A
- Maximum breaking capacity: 1500 VA6

Transistor output (42…44):

- Wire size max. 1.5 mm^2
- Type: Transistor output PNP
- Maximum load: 4 kohm
- Maximum switching voltage: 30 V DC
- Maximum switching current: 100 mA / 30 V DC, short-circuit protected
- Frequency: 10 Hz … 16 kHz
- Resolution: 1 Hz
- Inaccuracy: 0.2%

External power supply (40…41):

- Wire size max. 1.5 mm^2
- 24 V AC / V DC ±10% (GND, user potential)
- Maximum current consumption: 25 W, 1.04 A at 24 V DC

CMOD-02 multifunction extension module (external 24 V AC/DC and isolated PTC interface)

Safety instructions

WARNING! Obey the safety instructions for the drive. If you ignore the safety instructions, injury or death can occur.

Hardware description

Product overview

The CMOD-02 multifunction extension module (external 24 V AC/DC and isolated PTC interface) has a motor thermistor connection for supervising the motor temperature and one relay output, which indicates the thermistor status. To trip the drive, the user must connect this overtemperature indication back to the drive, for example, to its Safe torque off input.

In addition, the extension module has an external power supply interface, which can be used to power up the drive control board in case the drive power supply fails. If you do not need the back-up power supply, you do not have to connect it because the module is powered from the drive control board by default.

There is reinforced insulation between the motor thermistor connection, the relay output and the drive control board interface. Thus, you can connect a motor thermistor to the drive through the extension module.

Note: In frames R6…R9, you do not need a CMOD-02 module to use external 24 V AC/DC supply. The external supply is connected directly to terminals 40 and 41 on the control board.

WARNING! Do not connect the +24 V AC cable to the control board ground when the control board is powered using an external 24 V AC supply.

Layout

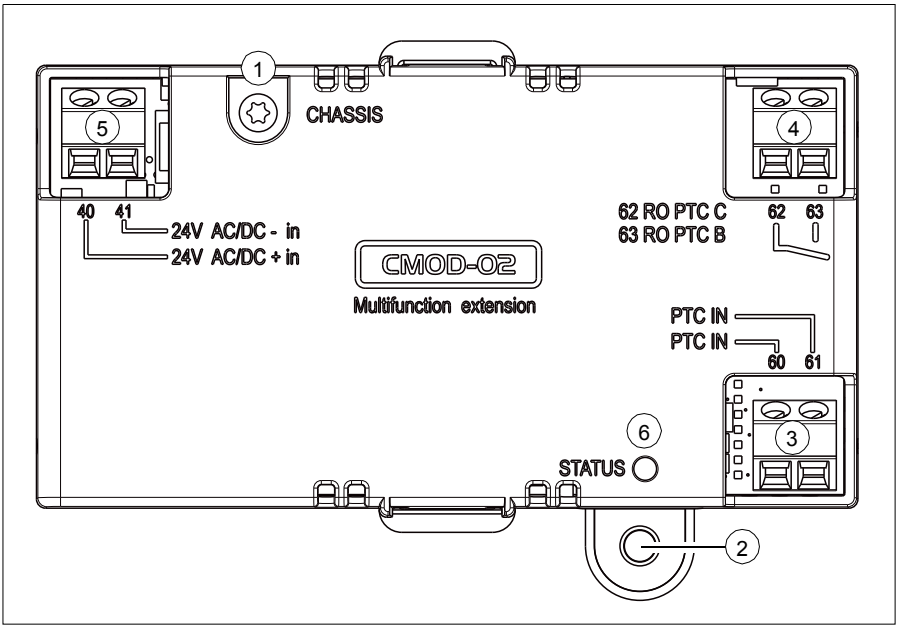

Item	Description	Additional information
1	Grounding screw	Page 243
2	Hole for mounting screw	Page 243
3	2-pin terminal block for motor thermistor connection	Page 244
4	2-pin terminal block for relay output	Page 244
5	2-pin terminal block for external power supply	Page 244
6	Diagnostic LED	Page 247

Mechanical installation

Necessary tools and instructions

- Screwdriver and a set of suitable bits

Unpacking and checking the delivery

1. Open the option package.
2. Make sure that the package contains:
   - CMOD-02 multifunction extension module
   - mounting screw
3. Make sure that there are no signs of damage.

Installing the module

See chapter *Installing option modules* on page *117*.

Electrical installation

Warnings

WARNING! Obey the instructions in chapter *Safety instructions* on page *13*. If you ignore them, injury or death, or damage to the equipment can occur. If you are not a qualified electrician, do not do electrical work.

Make sure that the drive is disconnected from the input power during installation. If the drive is already connected to the input power, wait for 5 minutes after disconnecting the input power.

Necessary tools and instructions

- Screwdriver and a set of suitable bits
- Cabling tools

Terminal designations

For more detailed information on the connectors, see section *Technical data* on page *248*.

Motor thermistor connection

Marking		Description
60	PTC IN	PTC connection
61	PTC IN	Ground (earth) potential

Relay output

Marking		Description
62	RO PTC C	Common, C
63	RO PTC B	Normally open, NO

External power supply

The external power supply is needed only if you want to connect an external back-up power supply for the drive control board.

Note: Frames R0…R5 need CMOD-01 for connecting external power supply, frames R6…R9 have corresponding terminals 40 and 41 on the control board.

Marking		Description
40	24V AC/DC + in	External 24 V (AC/DC) input
41	24V AC/DC - in	External 24 V (AC/DC) input

General cabling instructions

Obey the instructions given in chapter *Planning the electrical installation* on page *59*.

Wiring

Connect the external control cables to the applicable module terminals. Ground the outer shield of the cables 360 degrees under a grounding clamp on the grounding shelf of the control cables

Motor thermistor connection example

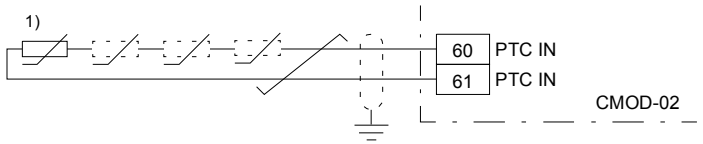

1) One or 3…6 PTC thermistors connected in series.

The PTC input is reinforced/double insulated. If the motor part of the PTC sensor and wiring are reinforced/double insulated, voltages on the PTC wiring are within SELV limits.

If the motor PTC circuit is not reinforced/double insulated (ie, it is basic insulated), it is mandatory to use reinforced/double insulated wiring between the motor PTC and CMOD-02 PTC terminal.

Relay output connection example

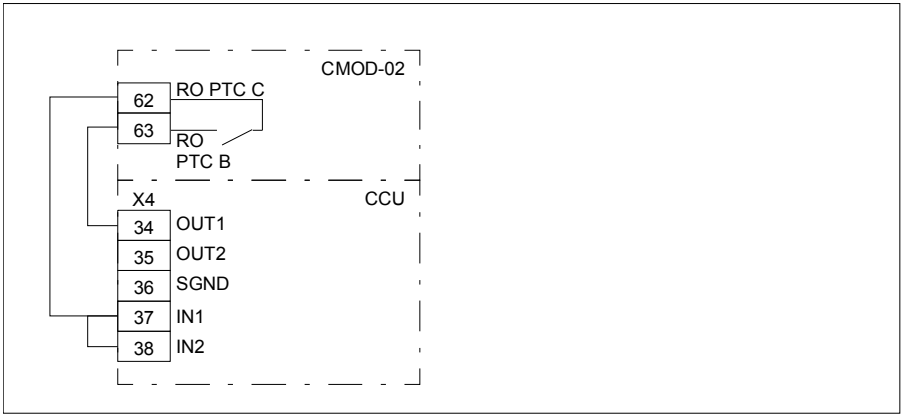

Power supply connection example

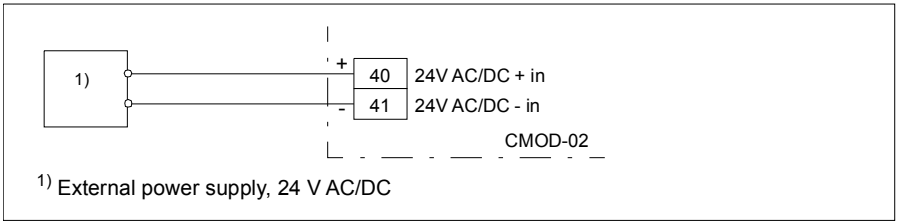

WARNING! Do not connect the +24 V AC cable to the control board ground when the control board is powered using an external 24 V AC supply.

Start-up

Setting the parameters

1. Power up the drive.
2. If no warning is shown,
   - make sure that the value of both parameter 15.02 Detected extension module and parameter 15.01Extension module type is CMOD-02.

   If warning A7AB Extension I/O configuration failure is shown,
   - make sure that the value of parameter 15.02 Detected extension module is CMOD-02.
   - set parameter 15.01 Extension module type to CMOD-02.

You can now see the parameters of the extension module in parameter group 15 I/O extension module.

Diagnostics

Faults and warning messages

Warning A7AB Extension I/O configuration failure.

LEDs

The extension module has one diagnostic LED.

Color	Description
Green	The extension module is powered up.

Technical data

Dimension drawing:

The dimensions are in millimeters and [inches].

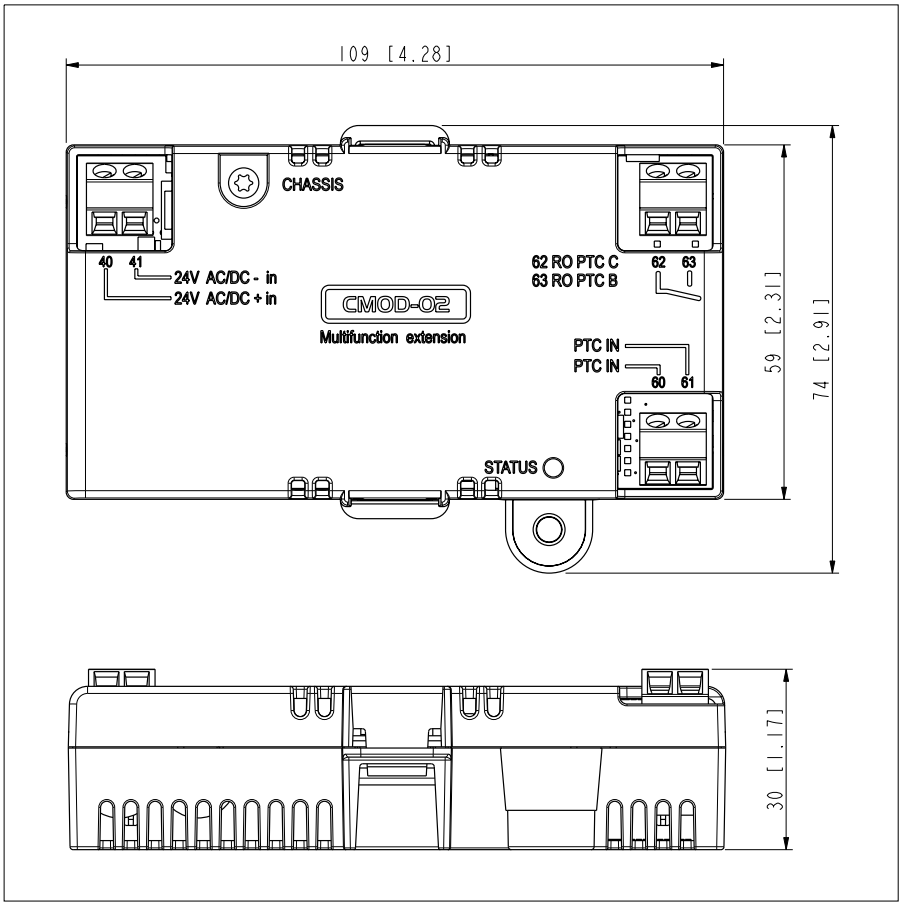

Installation: Into an option slot on the drive control board

Degree of protection: IP20

Ambient conditions: See the drive technical data.

Package: Cardboard

Isolation areas:

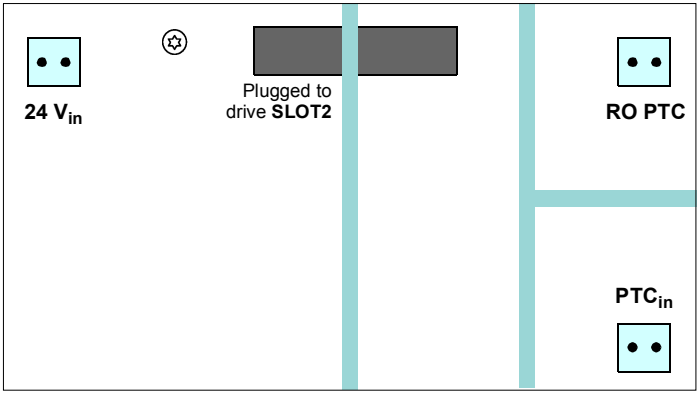

Symbol	Description
	Reinforced insulation (IEC 61800-5-1:2007)
	Functional insulation (IEC 61800-5-1:2007)

Motor thermistor connection (60…61):

- Wire size max. 1.5 mm^2
- Supported standards: DIN 44081 and DIN 44082
- Number of PTC thermistor relays: 1 or 3…6 in series
- Triggering threshold: 3.6 kohm
- Recovery threshold: 1.6 kohm
- PTC terminal voltage: $\leq$ 5.0 V
- PTC terminal current: < 1 mA
- Short-circuit detection: < 50 ohm

Relay output (62…63):

- Wire size max. 1.5 mm^2
- Maximum contact rating: 250 V AC / 30 V DC / 5 A
- Maximum breaking capacity: 1000 VA

External power supply (40…41):

- Wire size max. 1.5 mm^2
- 24 V AC / V DC ±10% (GND, user potential)
- Maximum current consumption: 25 W, 1.04 A at 24 V DC

Further information

Product and service inquiries

Address any inquiries about the product to your local ABB representative, quoting the type designation and serial number of the unit in question. A listing of ABB sales, support and service contacts can be found by navigating to www.abb.com/searchchannels.

Product training

For information on ABB product training, navigate to new.abb.com/service/training.

Providing feedback on ABB Drives manuals

Your comments on our manuals are welcome. Navigate to new.abb.com/drives/manuals-feedback-form.

Document library on the Internet

You can find manuals and other product documents in PDF format on the Internet at www.abb.com/drives/documents.

Contact us

www.abb.com/drives
www.abb.com/drivespartners

3AUA0000076331 Rev B (EN) 2016-04-14

3AUA0000076331B

Power and productivity
for a better world™