Options for ABB drives

User's manual

Emergency stop, stop category 0 (option +Q951) for ACS580-07 (250 to 500 kW) drives

Power and productivity
for a better world™

List of related manuals

Drive manuals and guides	Code (English)
ACS580 standard control program firmware manual	*3AXD50000016097*
ACS580-07 drives (250 to 500 kW) hardware manual	*3AXD50000032622*
ACX-AP-x assistant control panels user's manual	*3AUA0000085685*
ACS-BP-S basic control panels user's manual	*3AXD50000032527*

PC tool manuals	
Start-up and maintenance PC tool Drive composer user's manual	*3AUA0000094606*
Functional safety design tool user's manual	*3AXD10000102417*

Option manuals and general safety guides	
Emergency stop, stop category 0 (option +Q951) for ACS580-07 (250 to 500 kW) drives User's manual	*3AXD50000032016*
Functional safety; Technical guide No. 10	*3AUA0000048753*
Safety and functional safety; A general guide	*1SFC001008B0201*
ABB Safety information and solutions	www.abb.com/safety
Manuals and quick guides for I/O extension modules, fieldbus adapters, etc.	

You can find manuals and other product documents in PDF format on the Internet. See section *Document library on the Internet* on the inside of the back cover. For manuals not available in the Document library, contact your local ABB representative.

ACS580-07
(250 to 500 kW) manuals

User’s manual

Emergency stop, stop category 0 (option +Q951) for ACS580-07 (250 to 500 kW) drives

Table of contents

© 2017 ABB Oy. All Rights Reserved.

3AXD50000032016 Rev C
EN
EFFECTIVE: 2017-09-25

Table of contents

List of related manuals 2

1. Introduction to the manual

Contents of this chapter 7
Applicability 7
Safety instructions 7
Target audience 8
Contents 8
Related documents 8
Abbreviations 8
Exclusion of liability 9
Quick reference guide for implementing a safety system 9

2. Option description and instructions

Contents this chapter 11
Overview 11
Operation principle 12
  Frames R10 and R11 12
Fault reaction function 13
Parameter settings 13
Hardware settings 14
  Frames R10 and R11 14
Wiring 14
Start-up and acceptance test 15
    Checks and settings with no voltage connected 15
    Settings with voltage connected 15
    Acceptance test 15
Use of the safety function 16
  Activating 16
  Resetting 16
Emergency stop indications 16
Fault tracing 17
  Frames R10 and R11 17
Maintenance 18
  Proof test interval 18
  Competence 18
  Residual risk 18
  Intentional misuse 19
  Decommissioning 19
Safety data 20
  Safety data values 20
  Safety component types 20
  Safety block diagrams 21
    Frames R10 and R11 21
  Relevant failure modes 21
  Fault exclusions 21
  Operation delays 21
General rules, notes and definitions 22

Validation of the safety functions 22
Validation procedure 22
Acceptance test reports 22
Competence 22
Ambient conditions 23
Frames R10 and R11 23
Reporting problems and failures related to safety functions 23
Related standards and directives 24
Compliance with the European Machinery Directive 24

Further information

Product and service inquiries 25
Product training 25
Providing feedback on ABB manuals 25
Document library on the Internet 25

1

Introduction to the manual

Contents of this chapter

This chapter describes the manual in short and gives some general information for the reader. The chapter also contains a quick reference for implementing a safety system.

Applicability

The manual applies to ACS580-07 (250 to 500 kW) drives which have the option: Emergency stop, stop category 0 with main contactor, with safety relays (option +Q951).

Safety instructions

Only a qualified electrician who has appropriate knowledge on functional/machine/process safety is allowed to install, start up and maintain the safety circuit.

WARNING! After you have made additions to the drive safety circuit or modified it, changed circuit boards inside the drive, always test the operation of the safety circuit according to its acceptance test procedure. The change can affect unexpectedly. All customer-made changes are on the customer's responsibility. All customer-made changes are on the customer's responsibility.

WARNING! Read and obey all safety instructions given for the drive in its hardware manual. If you ignore them, injury or death, or damage to the equipment can occur.

This manual does not repeat the complete safety instructions of the drive but it only includes the instructions related to the scope of this manual.

Target audience

The manual is intended for people who install, start up, use and service the safety option of the drive. Read the manual before working on the drive. You are expected to know the fundamentals of electricity, wiring, electrical components, electrical schematic symbols, and functional safety.

Contents

The chapters of this manual are briefly described below.

Introduction to the manual (this chapter) introduces this manual.

Option description and instructions describes the safety option and instructs how to wire, start up, test, validate, use and maintain it. The chapter also contains the safety data.

Related documents

- Product manuals (see the inside of the front cover)
- Circuit diagrams delivered with the drive
- Part lists delivered with the drive

Abbreviations

Abbreviations used in this manual are listed below.

Abbreviation	Description	Reference
Cat.	Category 1. Stop category according to EN/IEC 60204-1 The stop categories are: 0 (uncontrolled stop) and 1 (controlled stop) 2. Classification of the safety-related parts of a control system in respect of their resistance to faults and their subsequent behavior in the fault condition, and which is achieved by the structural arrangement of the parts, fault detection and/or by their reliability. The categories are: B, 1, 2, 3 and 4.	 EN/IEC 60204-1 EN ISO 13849-1
CCF	Common cause failure (%)	EN ISO 13849-1
DC	Diagnostic coverage	EN ISO 13849-1
DI	Digital input	
DIIL	Digital input interlock	
E-stop	Emergency stop	
Frame (size)	Relates to the construction type of the drive in question. For example, several drive types with different power ratings can have the same basic construction, and a frame size is used in reference to all those drive types.	
HFT	Hardware fault tolerance	IEC 61508, EN/IEC 62061
IGBT	Insulated gate bipolar transistor	
PFD_{avg}	Average probability of dangerous failure on demand	IEC 61508
PFH	Average frequency of dangerous failures per hour	IEC 61508, EN ISO 13849-1, EN/IEC 62061, EN/IEC 61800-5-2
PL	Performance level (levels are: a, b, c, d and e). Corresponds to SIL.	EN ISO 13849-1
R6...R11	Frame size designation of the drive	

Abbreviation	Description	Reference
SC	Systematic capability	IEC 61508
SIL	Safety integrity level	IEC 61508, IEC 61511, EN/IEC 62061, EN/IEC 61800-5-2
SILCL	Maximum SIL that can be claimed for a safety function or subsystem	EN/IEC 62061
T1	Proof test interval or lifetime (the smaller one)	IEC 61508, EN/IEC 62061

Exclusion of liability

ABB is not responsible for the implementation, verification and validation of the overall safety system. It is the responsibility of the system integrator (or other party) who is responsible for the overall system and system safety.

The system integrator (or other responsible party) must make sure that the entire implementation complies with all relevant standards, directives and local electrical code, and that the system is tested, verified and validated correctly.

Quick reference guide for implementing a safety system

Task	☑
Select the appropriate functional safety standard for the implementation: EN ISO 13849-1, EN/IEC 62061, IEC 61511 or other.	☐
If you select EN/IEC 62061 or IEC 61511, make a safety plan. See EN/IEC 62061 or IEC 61511.	☐
Assess safety: analyze and evaluate risks (estimate SIL/PL) and define risk reduction strategies. Define the safety requirements.	☐
Design the safety system. The part of the design made by ABB is described in chapter *Option description and instructions* on page *11*.	☐
If you made any changes to the delivered safety system, verify the achieved SIL/PL with, for example, FSDT-01 Functional safety design tool or similar. See *Functional safety design tool user's manual* (3AXD10000102417 [English]).	☐
Connect the wiring. See section *Wiring* on page *14*.	☐
Set the parameters. See section *Parameter settings* on page *13*.	☐
Validate that the implemented system meets the safety requirements: • Do the acceptance test. See section *Start-up and acceptance test* on page *15*.	☐
Write the necessary documentation.	☐

2

Option description and instructions

Contents this chapter

This chapter describes the +Q951 emergency stop option and instructs how to wire, start up, test, validate, use and maintain it. The safety data is also given.

Overview

Option +Q951 corresponds to an uncontrolled stop in accordance with stop category 0 (EN/IEC 60204-1). After the emergency stop command has been given, the drive trips the main contactor which cuts off the input power of the drive. The motor coasts to a stop.

The design principles of the option +Q951 comply with EN ISO 13850.

For a list of related standards and European directives, see section *Related standards and directives* on page *24*.

Operation principle

Frames R10 and R11

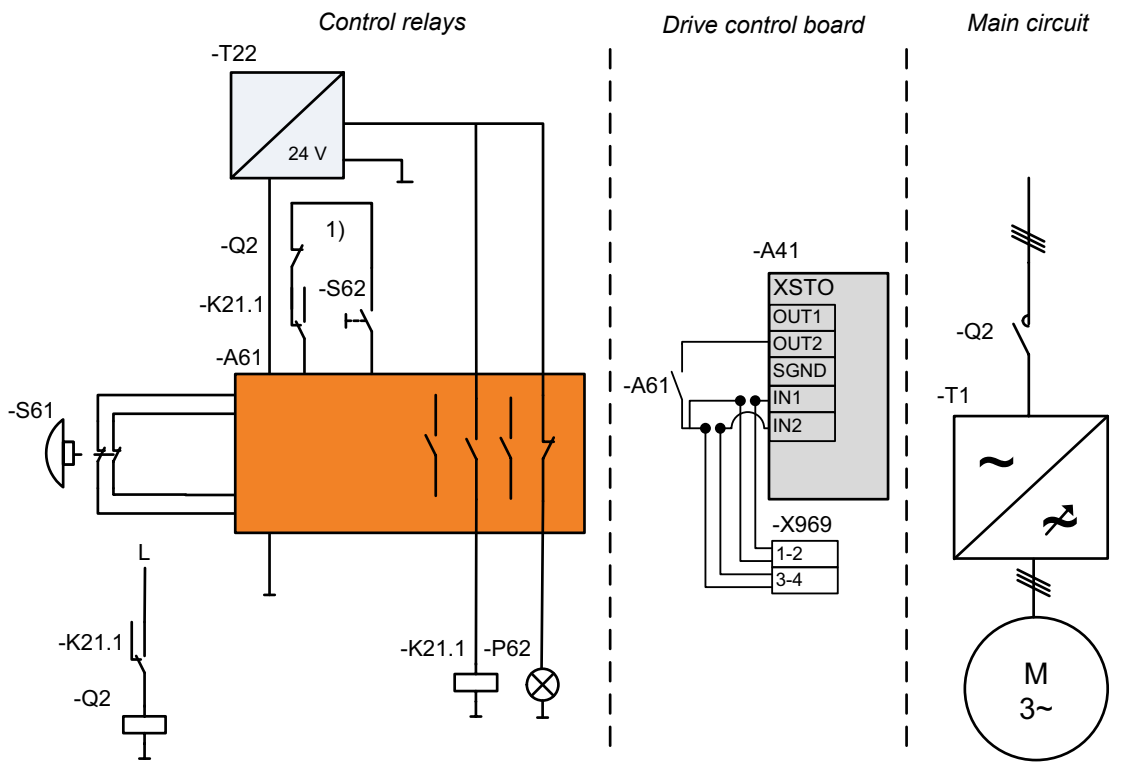

1)	Reset circuit	S61	Emergency stop button
A41	Control board	S62	Emergency stop reset button
A61	Emergency stop safety relay	P62	Emergency stop indication lamp
K21.1	Auxiliary safety relay	T1	Drive module
Q2	Main contactor	T22	24 V power supply
X969	STO terminal block		

Initial status: The drive is in operation and the motor is running.

Step	Operation
1.	The user activates emergency stop by pushing the emergency stop button [S61].
2.	The emergency stop safety relay [A61] switches off the XSTO inputs IN1 and IN2 of the drive control board. The emergency stop safety relay [A61] de-energizes the auxiliary safety relay [K21.1] which de-energizes the main contactor [Q2]. The main contactor [Q2] switches off the power supply to the drive module [T1].
3.	The emergency stop indication lamp [P62] of emergency stop reset button [S62] switches on.
4.	The motor coasts to zero speed and remains at zero speed while the emergency stop is active.
5.	Normal operation resumes after the user: • releases the emergency stop button [S61] to normal (up) position • resets the emergency stop circuit with the emergency stop reset button [S62] • resets the drive (if the STO indication parameter *31.22* has been set so that a fault is generated). If the drive is used in remote control mode, see the firmware manual for more information.

Fault reaction function

Definition: A safety function requires a “fault reaction function” that attempts to initiate a safe state if the safety function's diagnostics detect a fault within the hardware/software that performs the safety function.

The fault reaction function of the emergency stop safety relay [A61] trips if it detects a failure (short circuit between signals, open circuits, redundancy fault when the emergency stop button is pushed) in the safety circuit. The fault reaction function shifts the drive immediately into the safe state by switching on the drive emergency stop command, opening the main contactor, and keeping them on until the detected fault has been repaired. The indication lamp [P62] of the reset button [S62] is on until the fault has been repaired.

The emergency stop reset circuit must be open when the user releases the emergency stop button. The emergency stop safety relay [A61] detects if the reset circuit is closed and the relay does not close.

Parameter settings

The drive parameter setting in the drive control program:

- parameter *31.22 STO indication run/stop* is set to value *Warning/Warning* (recommended).

For more information, see the firmware manual.

Hardware settings

Appropriate hardware settings have been preset at the factory for the safety function.

Frames R10 and R11

The settings in the emergency stop safety relay [A61] are:

- cross fault detection is set to value *On*,
- manual reset is set to value *On*.

Note: If the cross fault detection is not *On*, it decreases the fault diagnostics of the wiring.

For more information, see the circuit diagrams delivered with the drive.

Wiring

One emergency stop button and one reset button are installed on the cabinet door and wired to the drive at the factory. There are double contacts in the emergency stop button and double wiring (two-channel connection) between the button and the emergency stop safety relay [A61]. The safety relay detects cross faults and faults across one contact from the emergency stop button. This function must be used in a redundant manner, that is, the emergency stop button must be connected to both terminals with a separate contact.

If needed, install additional emergency stop buttons on site and wire them to the appropriate terminal block inside the drive cabinet. See the circuit diagrams delivered with the drive. Obey these rules:

1. Use only double-contact buttons approved for the emergency stop circuits.
2. Connect the emergency stop buttons with two conductors (two-channel connection). **Note:** Keep the channels separate. If you use only one channel, or if the first and second channels are connected together (for example, in a chain), the cross fault detection of the emergency stop safety relay trips and activates the emergency stop command of the drive as it detects a redundancy fault.
3. Use a shielded, twisted pair cable. We recommend a double-shielded cable and gold-plated contacts in the emergency stop button.
4. Ensure that the sum resistance for one channel (loop resistance) from the field to the safety relay does not exceed 70 Ohm.
5. Obey the general control cable installation instructions given in the drive hardware manual.

You can also install additional reset buttons and indication lamps for the emergency stop circuit on site. We recommend gold-plated contacts in the reset button. Wire the buttons to the appropriate terminal block inside the drive cabinet. See the circuit diagrams delivered with the drive. Obey these rules:

1. Sum resistance of the external reset circuit must not exceed 70 Ohm.
2. Obey the general control cable installation instructions given in the drive hardware manual.

Start-up and acceptance test

You need the Drive composer PC tool or a control panel to perform the start-up and acceptance test.

Initial status: Make sure that the drive is ready for use, that is, you have done the tasks of the drive start-up procedure. See the hardware manual.

Action	☑
⚠ **WARNING!** Obey the *Safety instructions*, page *7*. If you ignore them, injury or death, or damage to the equipment can occur.	☐
Checks and settings with no voltage connected	
If any connections of the emergency stop circuit have been done on site (such as wiring of additional emergency stop buttons, connection of shipping splits of large drives, etc.), check the connections against the appropriate circuit diagrams.	☐
Check that the hardware settings relevant to the safety function are set as defined in section *Hardware settings* on page *14*.	☐
Settings with voltage connected	
Check that the parameters relevant to the safety function are set as defined in section *Parameter settings* on page *13*.	☐
Acceptance test	
Make sure that you can ran and strop the motor freely during the test.	☐
Start the drive and make sure that the motor is running. If possible, use a motor speed close to the maximum speed of the application.	☐
Push the emergency stop button [S61].	☐
Make sure that the drive stops the motor by coasting and displays a related warning. See section *Emergency stop indications* on page *16*.	☐
Make sure that the indication lamp [P62] switches on.	☐
Make sure that you cannot switch the power on with the operating switch.	☐
Make sure that you cannot start the drive and motor from any control location: Make sure that the motor does not start even if you switch the start signal off and on or push the start key of the panel.	☐
Turn the emergency stop button [S61] until it releases and returns to the up position.	☐
Push the emergency stop reset button [S62]. Make sure that the indication lamp [P62] switches off.	☐
Make sure that the indication lamp [P62] switches off.	☐
Switch off the drive start signal.	☐
Power up the drive (see the hardware and firmware manuals).	☐
Restart the drive and motor and check that they operate normally.	☐
Repeat the test from each operating location (every emergency stop button and reset button).	☐
Fill in and sign the acceptance test report which verifies that the safety function is safe and accepted to operation.	☐

Use of the safety function

Activating

1. Push the emergency stop button [S61]. The emergency stop activates and the button locks in “ON” (open) position.

Resetting

1. Turn the emergency stop button [S61] until it releases.
2. Push the emergency stop reset button [S62] on the cabinet door.

   The indication lamp [P62] of the reset button [S62] goes out, the emergency stop deactivates.
3. Reset the drive if necessary.
4. Close the main contactor with the operating switch if necessary (see the hardware and firmware manuals).

   The main contactor closes and the drive is powered up.
5. Make sure that the drive has received the start signal (depends on the configuration, see the firmware manual).
6. You can now restart the drive.

Note: You have to reset the emergency stop circuit with the reset button [S62] also after you have powered up the drive.

Emergency stop indications

When the emergency stop is on:

- the drive control program has the *Safe torque off* warning active,
- the emergency stop reset button [S62] on cabinet door is illuminated (indication lamp [P62]).

Fault tracing

Frames R10 and R11

The emergency stop safety relay [A61] type is Dold LG5925. For more information, see the data sheet of the relay (www.dold.com)

This table describes the status LEDs of the emergency stop safety relay [A61].

LED	LED is lit and steady
Netz	Power supply is connected.
K1	Relay K1 is energized.
K2	Relay K2 is energized.

To reset the emergency stop safety relay [A61] after fault situations, switch off the external power supply of the safety relay.

For more fault tracing possibilities, see the hardware and firmware manuals of the drive.

Maintenance

After the operation of the safety function is tested at start-up, it does not need any scheduled maintenance, excluding the main contactor which has a limited lifetime. Replace the contactor before the end of its lifetime. See the contactor data sheet or manual. Repeat the acceptance test for the function after the replacement. See section *Start-up and acceptance test* on page *15*.

In addition to proof testing, it is a good practice to check the operation of the function when other maintenance routines of the machinery are carried out. Do acceptance test described in section *Start-up and acceptance test* on page *15*.

If you change any wiring or component after the start up, or restore parameters to their default values:

- Use only ABB approved spare parts.
- Register the change to the change log for the safety circuit.
- Test the safety function again after the change. Obey the rules given in section *Start-up and acceptance test* on page *15*.
- Document the tests and store the report into the logbook of the machine.

Proof test interval

After the operation of the safety function is validated at start-up, the safety function must be maintained by periodic proof testing. In high demand mode of operation, the maximum proof test interval is 20 years. In low demand mode of operation, the maximum proof test interval is 1 year (high or low demand as defined in IEC 61508, EN/IEC 62061 and EN ISO 13849-1). Regardless of the mode of operation, it is a good practice to check the operation of the safety function at least once a year. Do the test as described in section *Start-up and acceptance test* on page *15*.

The person responsible for the design of the complete safety function should also note the Recommendation of Use CNB/M/11.050 published by the European co-ordination of Notified Bodies for Machinery concerning dual-channel safety-related systems with electromechanical outputs:

- When the safety integrity requirement for the safety function is SIL 3 or PL e (cat. 3 or 4), the proof test for the function must be performed at least every month.
- When the safety integrity requirement for the safety function is SIL 2 (HFT = 1) or PL d (cat. 3), the proof test for the function must be performed at least every 12 months.

This is a recommendation and depends on the required (not achieved) SIL/PL. For example, safety relays, contactor relays, emergency stop buttons, switches etc. are typically safety devices which contain electromechanical outputs.

Competence

The maintenance and proof test activities of the safety function must be carried out by a competent person with expertise and knowledge of the safety function as well as functional safety, as required by IEC 61508-1 clause 6.

Residual risk

The safety functions are used to reduce the recognized hazardous conditions. In spite of this, it is not always possible to eliminate all potential hazards. Therefore the warnings for the residual risks must be given to the operators.

Intentional misuse

The safety circuit is not designed to protect a machine against intentional misuse.

Decommissioning

When you decommission an emergency stop circuit or a drive, make sure that the safety of the machine is maintained until the decommissioning is complete.

Safety data

The safety data given below is valid for the default design of the safety circuit. In case the final design differs from the default, ABB calculates new safety data and delivers it separately to the customer.

Safety data values

The safety data calculations are based on the following assumptions on the operation of the main contactor [Q2]:

- It is switched at low load current (normal use, ~0%, AC-1).
- It is used for the emergency stop once a month.
- It is used for the ordinary on and off once a day.

ACS580-07 type	Contactor	SIL / SILCL	SC	PL	PFH [1/h]	PFD_{avg} (T1 = 1 a)	DC[1] [%]	Cat.	HFT	CCF	Life time [a]	T1[2] [a]
Frames R10 and R11												
-0495A-4 -0575A-4 -0640A-4 -0715A-4	AF750	2	3	d	5.0E-7	1.8E-03	>90	2	0	65	20	20 / 1
-0810A-4 -0870A-4	AF1250	2	3	d	5.0E-7	1.8E-03	>90	2	0	65	20	20 / 1

1) DC for low demand mode of operation is 0%
(determined by the DC of the worst component in the subsystem).

3AXD10000569791 Rev A

2) T1 = 20a is used with high demand mode of operation. T1 = 1a is used with low demand mode of operation.
See also section *Proof test interval* on page *18*.

Note: If T1 > 1a is needed in low demand mode of operation, SIL 1 / PL c levels shall be used and PFD calculated separately.

Safety component types

Safety component types as defined in IEC 61508-2:

- emergency stop button: type A
- emergency stop safety relay: type A
- auxiliary safety relay: type A
- main contactor: type A.

Safety block diagrams

The components that are included in the safety circuit are shown in these safety block diagrams.

Frames R10 and R11

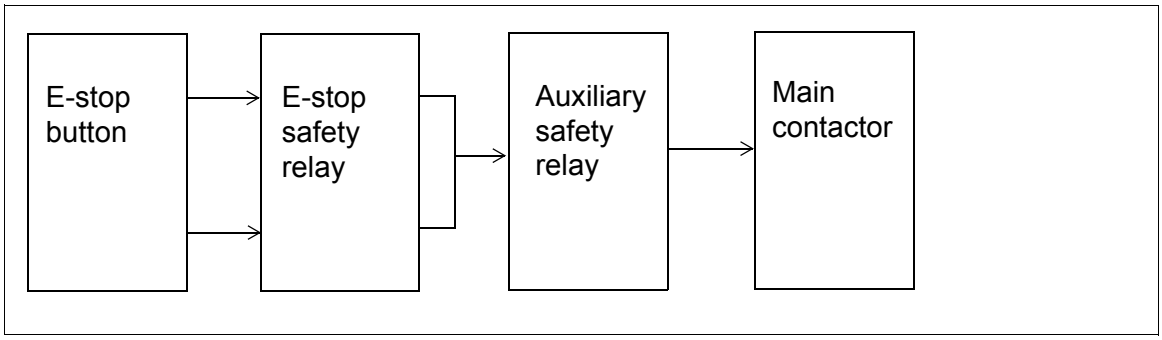

Relevant failure modes

- The main contactor does not open when requested. (All contactor failures are considered dangerous.)
- Internal failures of safety relays and the emergency stop button. These failures are included in the PFH value of the function.

Fault exclusions

Fault exclusions (not considered in the calculations):

- any short and open circuits in the cables of the safety circuit
- any short and open circuits in the cabinet terminal blocks of the safety circuits.

Operation delays

Emergency stop total delay: less than 250 ms

General rules, notes and definitions

Validation of the safety functions

You must do an acceptance test (validation) to validate the correct operation of safety functions.

Validation procedure

You must do the acceptance test using the checklist given in section *Start-up and acceptance test* on page *15*:

- at initial start-up of the safety function
- after any changes related to the safety function (wiring, components, safety function related parameter settings etc.)
- after any maintenance action related to the safety function.

The acceptance test must include at least the following steps:

- you must have an acceptance test plan
- you must test all commissioned functions for proper operation, from each operation location
- you must document all acceptance tests.

Acceptance test reports

You must store the signed acceptance test reports in the logbook of the machine. The report must include, as required by the referred standards:

- a description of the safety application (including a figure)
- a description and revisions of safety components that are used in the safety application
- a list of all safety functions that are used in the safety application
- a list of all safety related parameters and their values
- documentation of start-up activities, references to failure reports and resolution of failures
- the test results for each safety function, checksums, date of the tests and confirmation by the test personnel.

You must store any new acceptance test reports performed due to changes or maintenance in the logbook of the machine.

Competence

The acceptance test of the safety function must be carried out by a competent person with expertise and knowledge of the safety function as well as functional safety, as required by IEC 61508-1 clause 6. The test procedures and report must be documented and signed by this person.

Ambient conditions

For the environmental limits for the safety functions and the drive, refer to the hardware manual of your drive.

Frames R10 and R11

The maximum ambient temperature for the drive with safety relays is 45 °C (113 °F). In the temperature range +40…45 °C (+104…113 °F), the rated output current must be derated by 2% for every added 1 °C (1.8 °F). The output current can be calculated by multiplying the current given in the rating table by the derating factor (*k*):

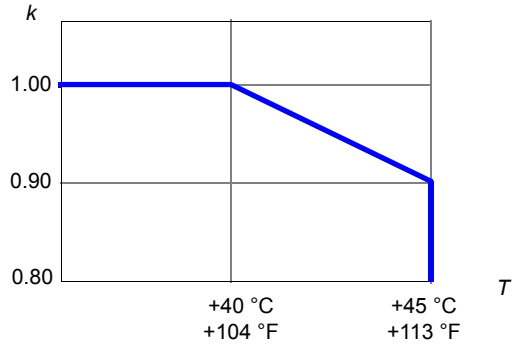

Reporting problems and failures related to safety functions

Contact your local ABB representative.

Related standards and directives

Standard	Name
EN 60204-1:2006 + AC:2010 IEC 60204-1:2005 + A1:2008	*Safety of machinery – Electrical equipment of machines – Part 1: General requirements*
IEC 61508-1:2010	*Functional safety of electrical/electronic/programmable electronic safety-related systems – Part 1: General requirements*
IEC 61508-2:2010	*Functional safety of electrical/electronic/programmable electronic safety-related systems – Part 2: Requirements for electrical/electronic/programmable electronic safety-related systems*
IEC 61800-5-2:2016 EN 61800-5-2:2007	*Adjustable speed electrical power drive systems – Part 5-2: Safety requirements – Functional*
IEC 62061:2015 EN 62061:2005 +AC:2010+A1:2013+A2:2015	*Safety of machinery – Functional safety of safety-related electrical, electronic and programmable electronic control systems*
EN ISO 12100:2010	*Safety of machinery – General principles for design – Risk assessment and risk reduction*
EN ISO 13849-1:2015	*Safety of machinery – Safety-related parts of control systems – Part 1: General principles for design*
EN ISO 13849-2:2012	*Safety of machinery – Safety-related parts of control systems – Part 2: Validation*
EN ISO 13850:2015 ISO 13850:2015	*Safety of machinery. Emergency stop. Principles for design*
IEC 61511-1:2016	*Functional safety – Safety instrumented systems for the process industry sector*
IEC 61326-3-1:2008	*Electrical equipment for measurement, control and laboratory use – EMC requirements – Part 3-1: Immunity requirements for safety-related systems and for equipment intended to perform safety-related functions (functional safety) – General industrial applications*
2006/42/EC	*European Machinery Directive*
Other	Machine-specific C-type standards

Compliance with the European Machinery Directive

The drive is an electronic product which is covered by the European Low Voltage Directive. However, the drive internal safety function of this manual (option +Q951) is in the scope of the Machinery Directive as a safety component. This function complies with European harmonized standards such as EN/IEC 61800-5-2. The declaration of conformity is delivered with the drive.

Further information

Product and service inquiries

Address any inquiries about the product to your local ABB representative, quoting the type designation and serial number of the unit in question. A listing of ABB sales, support and service contacts can be found by navigating to www.abb.com/searchchannels.

Product training

For information on ABB product training, navigate to new.abb.com/service/training.

Providing feedback on ABB manuals

Your comments on our manuals are welcome. Navigate to new.abb.com/drives/manuals-feedback-form.

Document library on the Internet

You can find manuals and other product documents in PDF format on the Internet at www.abb.com/drives/documents.

Contact us

www.abb.com/drives
www.abb.com/drivespartners

3AXD50000032016 Rev C (EN) 2017-09-25

Power and productivity
for a better world™