ABB high performance elevator drives

User's manual
ACL30 elevator drive

Power and productivity
for a better world™

List of related manuals

Drive manuals and guides	Code (English)	
ACL30 elevator drive user's manual	*3AXD50000036355*	
ACL30-04 elevator drive modules (2.2 to 32 kW) quick installation guide	*3AXD50000040591*	

Drive PC tools manuals		
DriveStudio user's manual	*3AFE68749026*	
DriveSPC user's manual	*3AFE68836590*	

Application manuals and guides		
Safe torque off function for ACL30 drive application guide	*3AXD50000045959*	*2)*

Option manuals and guides		
FIO-01 digital I/O extension user's manual	*3AFE68784921*	*2)*
FIO-11 analog I/O extension user's manual	*3AFE68784930*	*2)*
FEN-01 TTL encoder interface user's manual	*3AFE68784603*	*2)*
FEN-11 absolute encoder interface user's manual	*3AFE68784841*	*2)*
FEN-21 resolver interface user's manual	*3AFE68784859*	*2)*
FEN-31 HTL encoder interface user's manual	*3AUA0000031044*	*2)*
JPC-01 network communication adapter user's manual	*3AUA0000072233*	*1)*

1) Delivered as a printed copy with the drive or optional equipment.

2) Delivered by the Marketing Material Order Service on request (https://order.hansaprint.fi/abb/). Accessible only inside ABB.

You can find manuals and other product documents in PDF format on the Internet. See section *Document library on the Internet* on the inside of the back cover. For manuals not available in the Document library, contact your local ABB representative.

User’s manual

ACL30 elevator drive

Table of contents

1. Safety instructions

4. Mechanical installation

6. Electrical installation

8. Start-up and control

© 2016 ABB Oy. All Rights RESERVED.

3AXD50000036355 Rev B
EN
EFFECTIVE: 2016-11-21

Table of contents

List of related manuals 2

1. Safety instructions

Contents of this chapter 13
Use of warning and notes in this manual 13
General safety in installation, start-up and maintenance 14
Electrical safety in installation, start-up and maintenance 15
Precautions before electrical work 15
Additional instructions and notes 16
Grounding 17
Additional instructions for permanent magnet motor drives 18
Safety in installation, start-up and maintenance 18
General safety in operation 19

2. About the manual

Contents of this chapter 21
Applicability 21
Compatibility 21
Intended audience 22
Categorization according to frame size 22
Categorization according to + code 22
Contents of this manual 22
Terms and abbreviations 23
Installing and commissioning flowchart 26
Cyber security disclaimer 28

3. Operation principle and hardware description

Contents of this chapter 29
Product overview 29
Operation principle 30
Main circuit 30
Layout 31
Control interfaces 32
Type designation label 33

4. Planning the cabinet installation

Contents of this chapter 35
Constructing the cabinet 36
Main dimensions and free space requirements 37
Cooling and degrees of protection 39
Preventing recirculation of hot air 40
Cabinet heaters 41

5. Mechanical installation

Contents of this chapter . . . 43
Checking the installation site . . . 43
Required tools . . . 43
Unpacking . . . 44
Checking the delivery . . . 45
Installing the drive . . . 46
Installing mains choke . . . 46
Installing EMC filter . . . 46
Installing brake resistor . . . 46

6. Planning the electrical installation

Contents of this chapter . . . 47
Checking the compatibility of the motor and drive . . . 47
Selecting the supply disconnecting device . . . 48
    Requirements in European Union (EU) countries . . . 48
    Requirements in non-EU countries . . . 48
Selecting the power cables . . . 49
    General rules . . . 49
    Sufficient conductivity of the protective conductor . . . 49
    Typical power cable sizes . . . 50
    Alternative power cable types . . . 51
    Motor cable shield . . . 52
    Additional US requirements . . . 52
Selecting the control cables . . . 54
    Shielding . . . 54
    Signals in separate cables . . . 54
    Signals that can be run in the same cable . . . 54
    Relay cable . . . 54
Routing the cables . . . 55
    General rules . . . 55
    Separate control cable ducts . . . 56
    Continuous motor cable shield or enclosure for equipment on the motor cable . . . 56
Implementing thermal overload and short-circuit protection . . . 57
    Protecting the drive and input power cable in short-circuits . . . 57
    Protecting the motor and motor cable in short-circuits . . . 57
    Protecting the drive and the input power and motor cables against thermal overload . . . 57
    Protecting the motor against thermal overload . . . 57
Protecting the drive against ground faults . . . 58
    Residual current device compatibility . . . 58
Implementing the Safe torque off function . . . 58
Using a contactor between the drive and the motor . . . 58
Protecting the contacts of relay outputs . . . 59

7. Electrical installation

Contents of this chapter . . . 61
Checking the insulation of the assembly . . . 62
    Drive . . . 62

Input power cable . . . 62
Motor and power cable insulation . . . 62
Break resistor assembly insulation . . . 63
Connecting the power cables . . . 64
Connection diagram . . . 64
Connection procedure . . . 65
Installing power cable clamp plates . . . 67
Power cable connection – frame size B . . . 68
Power cable connection – frame sizes C and D (connector covers removed) . . . 69
Connecting the control cables: JCU control unit . . . 70
Jumpers . . . 71
External power supply for the JCU Control Unit (X1) . . . 71
Drive-to-drive link (X5) . . . 71
Safe Torque Off (X6) . . . 72
Thermistor input (X4:8…9) . . . 72
The 7-segment display on the JCU control unit . . . 73
Control cable grounding . . . 73
Installing the optional modules . . . 74

8. Installation checklist

Contents of this chapter . . . 75
Check the installation . . . 75

9. Start-up and control

Contents of this chapter . . . 77
Start-up the drive . . . 78

10. Using the control panel

Contents of this chapter . . . 87
Compatibility . . . 87
Features . . . 87
ACS-CP-U overview . . . 88
Status line . . . 89
Installing the control panel . . . 90
Connecting the panel to drive . . . 90
Mounting the control panel on the cabinet door . . . 90
Selecting the control panel cable . . . 90
Operating the control panel . . . 91
Basics of panel operation . . . 91
Getting Help – Any mode . . . 92
Finding panel version – any mode . . . 93
Using basic operations – Any mode . . . 94
Output mode . . . 95
Changing the direction of motor rotation in Output mode . . . 95
Setting speed reference in the Output mode . . . 96
Adjusting display contrast in the Output mode . . . 96
Using the Parameters option . . . 97
Selecting a parameter and changing its value . . . 97

Changing the value of value pointer parameters . . . 99
Pointing the bit pointer parameter to a bit value in another signal . . . 101
Changing bit pointer parameter value to 0 or 1 . . . 103
Changed Parameters mode . . . 105
Editing changed parameters . . . 106
Fault Logger option . . . 107
Viewing faults . . . 107
Resetting faults . . . 108
Time & Date option . . . 109
Using the Time and Date option . . . 109
Parameter Backup option . . . 111
Backup and restore parameters . . . 112
Handling parameter errors during backup and restore function . . . 114
Restoring a user set between different firmware versions . . . 116
Loading a user set between different firmware versions . . . 118
Viewing backup information . . . 119
I/O Settings . . . 120
Editing parameter settings of I/O terminals . . . 120
Reference Edit option . . . 122
Editing a reference value . . . 122
Drive Info option . . . 124
Viewing drive info . . . 124

11. Program features

Contents of this chapter . . . 127
Elevator system configuration . . . 128
Local control vs. external control . . . 129
Local control . . . 129
External control . . . 129
Safe torque off . . . 129
Drive programming . . . 130
Backup and restore of drive contents . . . 130
Limitations . . . 130
Parameter restore . . . 131
User parameter sets . . . 131
Basic start/stop operation . . . 132
Start/stop control . . . 132
Start/stop interlocking . . . 132
Drive faults . . . 133
Automatic fault reset . . . 133
Manual fault reset . . . 133
Elevator operation modes . . . 134
Releveling mode . . . 134
Evacuation mode . . . 135
Inspection mode . . . 135
Speed reference selection and scaling . . . 137
Speed reference selection . . . 137
Speed reference mode set to MULTIPLE . . . 138
Speed reference mode set to SEP HIGH PRI or SEP LEVEL PRI . . . 139
Speed reference scaling . . . 142

Speed profile . . . 144
Acceleration/deceleration selection . . . 144
Jerk selection . . . 145
Smart slowdown . . . 147
Mechanical brake control . . . 149
Torque proving . . . 150
Brake slip check . . . 151
Brake open torque selection . . . 151
Operation time scheme . . . 153
Inertia compensation . . . 154
Diagnostics . . . 154
Protection functions . . . 155
Speed match . . . 155
Motor stall . . . 157
Leveling overtime stop . . . 158
Thermal motor protection . . . 158
Programmable protection functions . . . 162
User lock . . . 162
Inputs and outputs . . . 164
Analog inputs . . . 164
Analog outputs . . . 164
Digital inputs and outputs . . . 165
Relay outputs . . . 166
Autophasing for permanent magnet synchronous motors . . . 167
Autophasing modes . . . 168
Emergency stop . . . 169
Encoder support . . . 170
Encoder module selection . . . 170
Absolute encoder configuration . . . 171
Resolver configuration . . . 171
Pulse encoder configuration . . . 172
Rescue operation . . . 173
Evacuation mode . . . 174
Low voltage mode . . . 175
Control through the embedded fieldbus interface: DCU 16-bit profile . . . 177
Control and Status words for the DCU 16-bit profile . . . 177
Status Word for the DCU 16-bit profile . . . 177
References for the DCU 16-bit profile . . . 177
Actual signals for the DCU 16-bit profile . . . 178
Modbus register addresses for the DCU 16-bit profile . . . 179
DCU 32-bit profile . . . 180
Control and Status words for the DCU 32-bit profile . . . 180
Status word for the DCU 32-bit profile . . . 180
References for the DCU 32-bit profile . . . 180
Actual signals for the DCU 32-bit profile . . . 181
Modbus register addresses for the DCU 32-bit profile . . . 182

12. Parameters

Contents of this chapter . . . 183
Terms and abbreviations . . . 183

Setting parameters 184
Parameter groups 01…09 185
Parameter groups 10…99 214

13. Fault tracing

Contents of this chapter 289
Safety 289
Alarm and fault indications 289
How to reset 290
Fault history 290
Alarm messages generated by the drive 290
Fault messages generated by the drive 299

14. Maintenance

Contents of this chapter 313
Safety 313
Maintenance intervals 313
Heatsink 314
Cooling fan 315
    Fan replacement (Frame size B) 315
    Fan replacement (Frames C and D) 316
Reforming the capacitors 316
Other maintenance actions 317
    Transferring the memory unit to a new drive module 317

15. Technical data

Contents of this chapter 319
Drive specifications 319
Derating 320
    Ambient temperature derating 320
    Supply voltage derating 320
    Altitude derating 320
Cyclic loads 321
Dimensions and weights 322
Noise levels 322
Supply cable fuses 323
AC input (supply) connection 324
Motor connection 325
JCU Control Unit 325
Ambient conditions 327
Materials 328
Applicable standards 328
CE marking 329
    Compliance with the European Low Voltage Directive 329
    Compliance with the European EMC Directive 329
    Compliance with the Machinery Directive 329
Compliance with EN 61800-3:2004 330
    Definitions 330

First environment (drive of category C2) . . . 330
Second environment (drive of category C3) . . . 331
Second environment (drive of category C4) . . . 331
U.S. patents . . . 332

16. The Safe torque off function

17. Mains chokes

Contents of this chapter . . . 335
When is a mains choke required? . . . 335
Selecting the mains choke . . . 336
Degree of protection . . . 336
Dimensions and weights . . . 336
Installation guidelines . . . 336
Connection diagram . . . 337

18. EMC filters

Contents of this chapter . . . 339
EMC standard . . . 339
Selecting EMC filters . . . 340
Degree of protection . . . 340
Dimensions and weights . . . 340
JFI-0x (Frames B…D, category C2) installation . . . 341
Installation guidelines . . . 341
Connection diagram . . . 341

19. Resistor braking

Contents of this chapter . . . 343
Brake choppers and resistors . . . 343
Brake choppers . . . 343
Selecting a brake resistor . . . 344
Brake resistor selection table . . . 344
Installing and wiring the resistor . . . 345
Contactor protection of drive . . . 345
Braking circuit commissioning . . . 346

20. Dimension drawings

Contents of this chapter . . . 347
Frame size B . . . 348
Frame size C . . . 350
Frame size D . . . 352
Mains chokes – CHK-0x . . . 353
Mains choke – CHK-xx dimensions . . . 353
EMC filters – JFI-0x . . . 354
EMC filter – JFI-0x dimensions . . . 355
Brake resistors – JBR-xx . . . 356
Brake resistors – JBR-xx dimensions . . . 357

Further information

Product and service inquiries 359
Product training 359
Providing feedback on ABB manuals 359
Document library on the Internet 359

1

Safety instructions

Contents of this chapter

This chapter contains the safety instructions which you must obey when you install and operate the drive and do maintenance on the drive. If you ignore the safety instructions, injury, death or damage can occur.

Use of warning and notes in this manual

Warnings tell you about conditions which can cause injury or death, or damage to the equipment. They also tell you how to prevent the danger. Notes draw attention to a particular condition or fact, or give information on a subject.

The manual uses these warning symbols:

	Electricity warning tells about hazards from electricity which can cause injury or death, or damage to the equipment.
	General warning tells about conditions, other than those caused by electricity, which can cause injury or death, or damage to the equipment.
	Electrostatic sensitive devices warning tells you about the risk of electrostatic discharge which can cause damage to the equipment.

General safety in installation, start-up and maintenance

These instructions are for all personnel that install the drive and do maintenance work on it.

WARNING! Obey these instructions. If you ignore them, injury or death, or damage to the equipment can occur.

•Handle the drive carefully.

- Use safety shoes with a metal toe cap to avoid foot injury.
- Keep the drive in its package or protect it otherwise from dust and burr from drilling and grinding until you install it.
- Protect also the installed drive against dust and burr. Electrically conductive debris inside the drive may cause damage or malfunction.
- Vacuum clean the area below the drive before the start-up to prevent the drive cooling fan from drawing the dust inside the drive.
- Do not cover the air inlet and outlet when the drive runs.
- Make sure that there is sufficient cooling. For more information, see section *Cooling and degrees of protection* on page *39*.
- Before you connect voltage to the drive, make sure that the drive covers are on. Keep the covers on during the operation.
- Before you adjust the drive operation limits, make sure that the motor and all driven equipment can operate throughout the set operation limits.
- The maximum number of drive power-ups is two in one minute. Too frequent power-ups can damage the charging circuit of the DC capacitors. The maximum number of times the circuit can charge is: 1 million times for all frames.

If you have connected safety circuits to the drive (for example, emergency stop and Safe torque off), validate them at the start up.

Note:

- If you select an external source for start command and it is On, the drive starts immediately after fault reset.
- When the control location is not set to Local, the stop key on the control panel will not stop the drive.

  Drives can be repaired only by an authorized person.

Electrical safety in installation, start-up and maintenance

Precautions before electrical work

These warnings are for all personnel who do work on the drive, motor cable or motor.

WARNING! Obey these instructions. If you ignore them, injury or death, or damage to the equipment can occur. If you are not a qualified electrician, do not do electrical installation or maintenance work. Go through these steps before you begin any installation or maintenance work.

1. Clearly identify the work location.
2. Disconnect all possible voltage sources.
   - Open the main disconnector at the power supply of the drive.
   - Make sure that reconnection is not possible. Lock the disconnector to open position and attach a warning notice to it.
   - Disconnect any external power sources from the control circuits before you do work on the control cables.
   - After you disconnect the drive, always wait for 5 minutes to let the intermediate circuit capacitors discharge before you continue.
3. Protect any other energized parts in the work location against contact.
4. Take special precautions when close to bare conductors.
5. Measure that the installation is de-energized.
   - Use a multimeter with an impedance of at least 1 Mohm.
   - Make sure that the voltage between the drive input power terminals (L1, L2, L3) and the grounding terminal (PE) is close to 0 V.
   - Make sure that the voltage between the drive DC terminals (UDC+ and UDC-) and the grounding terminal (PE) is close to 0 V.
6. Install temporary grounding as required by the local regulations.
7. Ask for a permit to work from the person in control of the electrical installation work.

Additional instructions and notes

WARNING! Obey these instructions. If you ignore them, injury or death, or damage to the equipment can occur.

•If a drive whose varistors are not disconnected is installed on an IT power system (an ungrounded power system or a high resistance grounded [over 30 ohms] power system), the drive will be connected to earth potential through the varistors. This may cause danger or damage the drive.

- If a drive whose varistors (built-in) or mains filter (external option) are not disconnected is installed on an corner-grounded TN system, the drive will be damaged.
- Use all ELV (extra low voltage) circuits connected to the drive only within a zone of equipotential bonding, that is, within a zone where all simultaneously accessible conductive parts are electrically connected to prevent hazardous voltages appearing between them. You can accomplish this by a proper factory grounding, that is, make sure that all simultaneously accessible conductive parts are grounded to the protective earth (PE) bus of the building.
- Do not do insulation or voltage withstand tests on the drive or drive modules.

Note:

- The motor cable terminals of the drive are at a dangerous voltage when the input power is on, regardless of whether the motor is running or not.
- The DC and brake resistor terminals (UDC+, UDC-, R+ and R-) are at a dangerous voltage.
- External wiring can supply dangerous voltages to the terminals of relay outputs.
- The Safe torque off function does not remove the voltage from the main and auxiliary circuits. The function is not effective against deliberate sabotage or misuse.

WARNING! Use a grounding wrist band when you handle the printed circuit boards. Do not touch the boards unnecessarily. The components on the boards are sensitive to electrostatic discharge.

Grounding

These instructions are for all personnel who are responsible for the electrical installation, including the grounding of the drive.

WARNING! Obey these instructions. If you ignore them, injury or death, or equipment malfunction can occur, and electromagnetic interference can increase.

- If you are not a qualified electrician, do not do grounding work.
- Always ground the drive, the motor and adjoining equipment to the protective earth (PE) bus of the power supply. This is necessary for the personnel safety. Proper grounding also reduces electromagnetic emission and interference.
- Make sure that the conductivity of the protective earth (PE) conductors is sufficient. See section *Selecting the power cables* on page *49*. Obey the local regulations.
- Connect the power cable shields to the protective earth (PE) terminals of the drive.
- Make a 360° grounding of the power and control cable shields at the cable entries to suppress electromagnetic disturbances.

Note:

- You can use power cable shields as grounding conductors only when their conductivity is sufficient.
- Standard IEC/EN 61800-5-1 (section 4.3.5.5.2.) requires that as the normal touch current of the drive is higher than 3.5 mA AC or 10 mA DC, you must use a fixed protective earth (PE) connection. In addition,
  - install a second protective earth conductor of the same cross-sectional area as the original protective earthing conductor,

  or
  - install a protective earth conductor with a cross-section of at least 10 mm^2 Cu or 16 mm^2 Al,

  or
  - install a device which automatically disconnects the supply if the protective earth conductor breaks.

Additional instructions for permanent magnet motor drives

Safety in installation, start-up and maintenance

These are additional warnings concerning permanent magnet motor drives. The other safety instructions in this chapter are also valid.

WARNING! Obey these instructions. If you ignore them, injury or death and damage to the equipment can occur.

- Do not work on a drive when a rotating permanent magnet motor is connected to it. A rotating permanent magnet motor energizes the drive including its input power terminals.

Before installation, start-up and maintenance work on the drive:

- Stop the motor.
- Disconnect the motor from the drive with a safety switch or by other means.
- If you cannot disconnect the motor, make sure that the motor cannot rotate during work.
- Measure that the installation is de-energized.
  - Use a multimeter with an impedance of at least 1 Mohm.
  - Make sure that the voltage between the drive output terminals (T1/U, T2/V, T3/W) and the grounding (PE) busbar is close to 0 V.
  - Make sure that the voltage between the drive input power terminals (L1, L2, L3) and the grounding (PE) busbar is close to 0 V.
  - Make sure that the voltage between the drive DC terminals (UDC+, UDC-) and the grounding (PE) terminal is close to 0 V.
- Install temporary grounding to the drive output terminals (T1/U, T2/V, T3/W). Connect the output terminals together as well as to the PE.

Start-up and operation:

- Make sure you cannot run the motor over the rated speed. Motor overspeed causes overvoltage that can damage or explode the capacitors in the intermediate circuit of the drive.

General safety in operation

These instructions are for all personnel that operate the drive.

WARNING! Obey these instructions. If you ignore them, injury or death, or damage to the equipment can occur.

- Do not control the motor with the disconnector at the drive power supply; instead, use the control panel start and stop keys or commands through the I/O terminals of the drive.
- Give a stop command to the drive before you reset a fault. If you have an external source for the start command and the start is on, the drive will start immediately after the fault reset.

Note: When the control location is not set to Local, the stop key on the control panel will not stop the drive.

1

About the manual

Contents of this chapter

- *Applicability*
- *Compatibility*
- *Intended audience*
- *Categorization according to frame size*
- *Categorization according to + code*
- *Contents of this manual*
- *Applicability*
- *Terms and abbreviations*
- *Installing and commissioning flowchart*
- *Cyber security disclaimer*

Applicability

This manual applies to ACL30 elevator drive firmware version 1.10 or later.

You can see the drive version in parameter *09.04 FIRMWARE VER*, or in **System info** of the main menu on the drive control panel.

Compatibility

This manual complies with ACL30 elevator drive of frame sizes B, C and D.

Intended audience

This manual is intended for people who plan the installation, install, commission, use and service the drive. Read the manual before working on the drive. The reader is expected to know the fundamentals of electricity, wiring, electrical components and electrical schematic symbols.

The manual is written for readers worldwide. Both SI and imperial units are shown wherever appropriate.

Categorization according to frame size

The ACL30 elevator drive is manufactured in frames sizes B, C and D.

- Some instructions, technical data and dimensional drawings which concern only certain frame sizes are marked with the symbol of the frame size B, C or D.
- The frame size is marked on the *Type designation label* (page *33*).
- The frame size of each drive type is also indicated in the *Drive specifications* tables (page *319*).

Categorization according to + code

The instructions, technical data and dimensional drawings which concern only certain optional selections are marked with + codes, e.g. +L500. The options included in the drive can be identified from the + codes visible on the *Type designation label* of the drive.

Contents of this manual

This manual contains the following chapters:

Safety instructions give safety instructions for the installation, commissioning, operation and maintenance of the drive.

About the manual provides information of applicability, compatibility, intended audience, terms used, and contents of this manual. It also lists the steps for checking the delivery, installation and commissioning of the drive.

Operation principle and hardware description describes the drive module.

Planning the cabinet installation guides in planning the installation of the drive module into a user-defined cabinet.

Mechanical installation instructs how to place and mount the drive.

Planning the electrical installation instructs on the motor and cable selection, the protections and the cable routing.

Electrical installation instructs on how to wire the drive.

Installation checklist contains a list for checking the mechanical and electrical installation of the drive.

Start-up and control refers to the start-up instructions of the drive.

Using the control panel describes the control panel of the drive.

Program features contains descriptions of drive features.

Parameters describes the drive parameters.

Fault tracing lists the alarm and fault messages with possible causes and remedies.

Maintenance lists periodic maintenance actions along with work instructions.

Technical data contains the technical specifications of the drive, e.g. drive specifications, drive sizes, technical requirements and provisions for fulfilling the requirements of CE and other compliance markings.

The Safe torque off function describes the Safe torque off (STO) function.

Mains chokes details the optional mains chokes available for the drive.

EMC filters details the EMC filtering options available for the drive.

Resistor braking describes how to select, protect and wire brake resistors.

Dimension drawings contains the dimensional drawings of the drive and the connected equipment.

Terms and abbreviations

Term/ abbreviation	Definition
AI	Analog Input. Interface for analog input signals.
AO	Analog Output. Interface for analog output signals.
CHK-xx	Series of optional mains chokes
CRC	Cyclic Redundancy Check
DIO	Digital Input/Output. Interface for digital input/output signals.
DTC	Direct Torque Control. The motor control of the frequency converter is based on Direct Torque Control.
EFB	Embedded fieldbus
Elevator operation mode	Normal travel mode, releveling mode, evacuation mode or inspection mode
EMC	Electromagnetic compatibility
FCAN-01	Optional CANopen adapter module
FDNA-01	Optional DeviceNet adapter module
FECA-01	Optional EtherCAT® adapter module
FENA-11	Optional Ethernet adapter module. Supports the Ethernet/IP, Modbus/TCP and PROFINET IO protocols

Term/ abbreviation	Definition
FEN-01	Optional TTL encoder interface module
FEN-11	Optional absolute encoder interface module
FEN-21	Optional resolver interface module
FEN-31	Optional HTL encoder interface module
FIO-01	Optional digital I/O extension module
FIO-11	Optional analogue I/O extension module
FIO-21	Optional analog/digital I/O extension module
FLON-01	Optional LonWorks® adapter module
FPBA-01	Optional PROFIBUS DP adapter module
Frame (size)	Size of the drive module. This manual deals with frames B, C and D. To determine the frame size of a drive module, refer to the drive designation label attached to the drive, or the *Drive specifications* on page *319.*
FSCA-0x	Optional Modbus/RTU adapter module
IGBT	Insulated Gate Bipolar Transistor; a voltage-controlled semiconductor type widely used in inverters due to their easy controllability and high switching frequency.
I/O	Input/Output
ID run	Motor identification run. During the identification run, the drive will identify the characteristics of the motor for optimum motor control.
JBR-xx	Series of optional brake resistors
JCU	Control unit of the drive module. The JCU is installed on top of the power unit. The external I/O control signals are connected to the JCU, or optional I/O extensions mounted on it.
Jerk	Rate of change of acceleration/deceleration
JFI-xx	Series of optional EMC filters
JMU	Memory unit attached to the control unit of the drive
JPU	Power unit; see the definition below.
Parameter	User-adjustable operation instruction to the drive, or signal measured or calculated by the drive
PI controller	Proportional-Integral Controller
PLC	Programmable Logic Controller. Also referred to as elevator controller in this manual.
Power unit	Contains the power electronics and connections of the drive module. The JCU is connected to the power unit.
RFG	Ramp Function Generator
RFI	Radio-frequency interference
RO	Relay Output. Interface for a digital output signal. Implemented with a relay.
SSI	Synchronous Serial Interface
STO	Safe Torque Off

Term/ abbreviation	**Definition**
TH	Thermistor input of the drive
Traveling speed	Speed reference used in the normal travel mode after acceleration has ended until the elevator starts to decelerate to the leveling speed. Can be nominal speed, medium speed, speed2, or speed3.
UMFL	Firmware of the ACL30 elevator drive
UPS	Uninterrupted Power Supply. Power supply equipment with battery to maintain output voltage during power failure.

Installing and commissioning flowchart

Task	See...
Identify the frame size of your drive: B...D.	*Operation principle and hardware description: Type designation label* (page *33*)
Plan the installation. Select the cables, etc. Check the ambient conditions, ratings, required cooling air flow, input power connection, compatibility of the motor, motor connection, and other technical data.	*Planning the cabinet installation* (page *35*) *Planning the electrical installation* (page *47*) *Technical data* (page *319*) Option manual (if optional equipment is included)
Unpack and check the units. Check that all necessary optional modules and equipments are present and correct. Only intact units may be started up. **Note**: If the converter is non-operational for more than one year, reform the converter DC link capacitors. For more information, contact your ABB representative.	*Mechanical installation*: *Unpacking* (page *44*) and *Checking the delivery* (page *45*)
Check the installation site.	*Mechanical installation*: *Checking the installation site* (page *43*)
Install the drive in a cabinet.	*Mechanical installation*: *Installing the drive* (page *46*)
Route the cables.	*Planning the electrical installation*: *Routing the cables* (page *55*)

Task	See...
Check the insulation of the supply cable, the motor and the motor cable, and the resistor cable (if present).	*Electrical installation*: *Checking the insulation of the assembly* (page *62*)
If the drive is connected to an IT (ungrounded) system, disconnect the internal varistors and EMC filters. **Note**: Do not use an EMC filter in an IT (ungrounded) system.	*Safety instructions*: *Safety in installation, start-up and maintenance* (page *18*) *Electrical installation*: *Connecting the power cables* (page *64*)
Connect the power cables. Connect the control and the auxiliary control cables.	*Electrical installation*: *Connecting the power cables* (page *64*) and *Connecting the control cables: JCU control unit* (page *70*) For optional equipment, see: *Mains chokes* (page *335*) *EMC filters* (page *339*) *Resistor braking* (page *343*) See also, manuals for any optional equipment
Check the installation.	*Installation checklist* (page *75*)
Commission the drive.	*Start-up and control* (page *77*)
Commission the brake chopper if required.	*Resistor braking* (page *343*)
Operate of the drive: start, stop, speed control etc.	*Start-up the drive* (page *78*)

Cyber security disclaimer

This product is designed to be connected to and to communicate information and data via a network interface. It is Customer's sole responsibility to provide and continuously ensure a secure connection between the product and Customer network or any other network (as the case may be). Customer shall establish and maintain any appropriate measures (such as but not limited to the installation of firewalls, application of authentication measures, encryption of data, installation of anti-virus programs, etc) to protect the product, the network, its system and the interface against any kind of security breaches, unauthorized access, interference, intrusion, leakage and/or theft of data or information. ABB and its affiliates are not liable for damages and/or losses related to such security breaches, any unauthorized access, interference, intrusion, leakage and/or theft of data or information.

See also section *User lock* (page *162*).

2

Operation principle and hardware description

Contents of this chapter

This chapter describes the construction and operating principle of the ACL30 elevator drive.

Product overview

The ACL30 elevator drive can be used for a wide range of elevator applications, such as passenger elevators and freight elevators. The same application enables geared and gearless applications, supporting both synchronous and asynchronous motors. High elevator control performance is achieved by utilizing the Direct Torque Control (DTC) technology. Accurate control of speed and torque can be implemented with or without feedback from the motor shaft.

The drive is available in frame sizes B, C and D depending on the output power. All frame sizes use the JCU type control unit. The customer can install the drive module into a cabinet. The drive module has an air-cooled heatsink.

Operation principle

The ACL30 elevator drive is a wall or cabinet mountable drive for controlling an asynchronous motor or a permanent magnet motor. The following components define the operation of the drive. See the main circuit on page 30.

Component	Description
Rectifier	Converts the three-phase AC voltage to DC voltage.
Capacitor bank	Stores energy which stabilizes the intermediate circuit DC voltage.
Drive	Converts DC voltage to AC voltage and vice versa. The motor is controlled by switching the IGBTs of the drive.
Brake chopper	Conducts the energy generated by a decelerating motor from the DC bus to a braking resistor. The brake chopper is built in the ACL30. Brake resistors are external options.
Brake resistor	Dissipates the regenerative energy by converting it to heat.
Mains choke	Reduces • harmonics and r.m.s in the input current • supply disturbance and low-frequency interference.
Mains filter	See page 339.

Main circuit

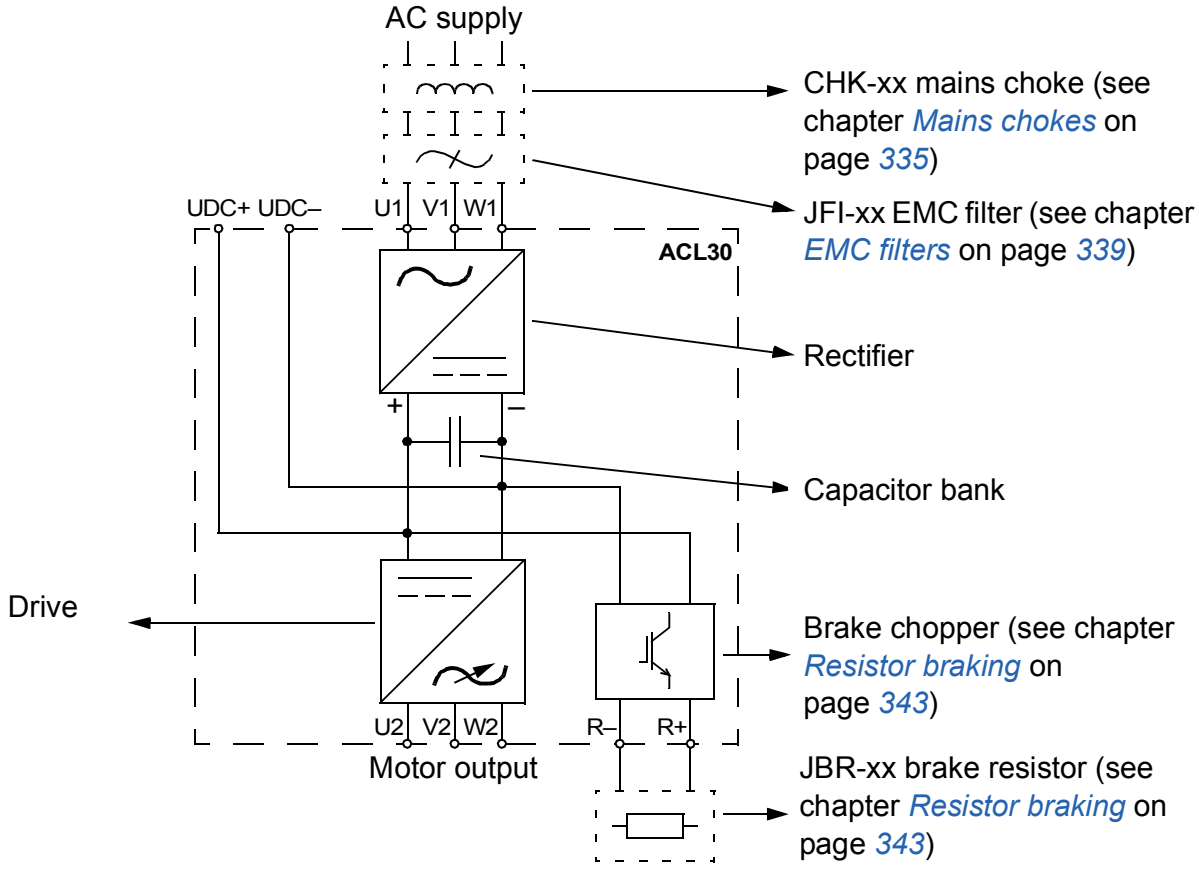

Layout

The construction of different frame sizes B, C and D varies to some extent. The figure shows a frame size B drive.

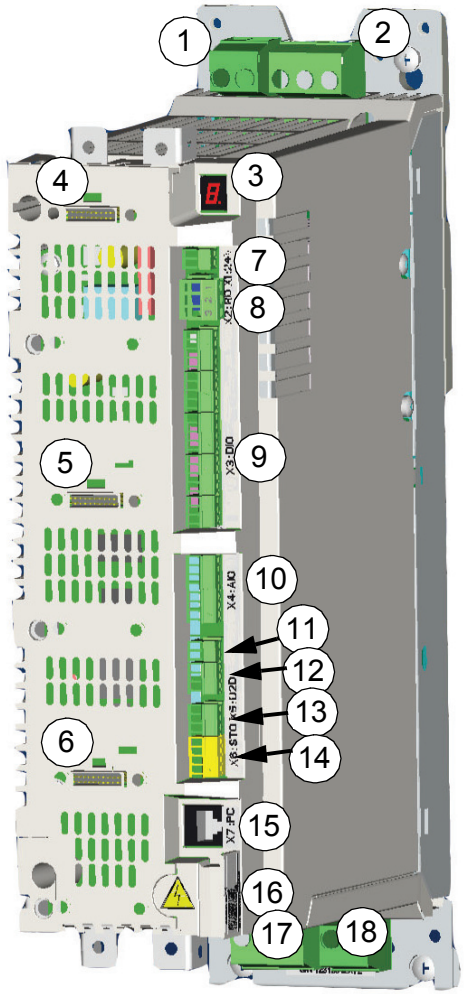

Item	Explanation
1	DC connection
2	AC supply connection
3	7-segment display
4	Slots 1 for optional I/O extensions and encoder/resolver interface
5	Slots 2 for optional I/O extensions and encoder/resolver interface
6	Slot 3 for optional fieldbus adapter
7	External 24 V power input
8	Relay output
9	Digital inputs/outputs
10	Analogue inputs
11	Thermistor input
12	Analogue outputs
13	Embedded fieldbus connection
14	Safe Torque Off connection
15	Control panel/PC connection
16	Memory unit connection
17	Motor connection
18	Braking resistor connection

Control interfaces

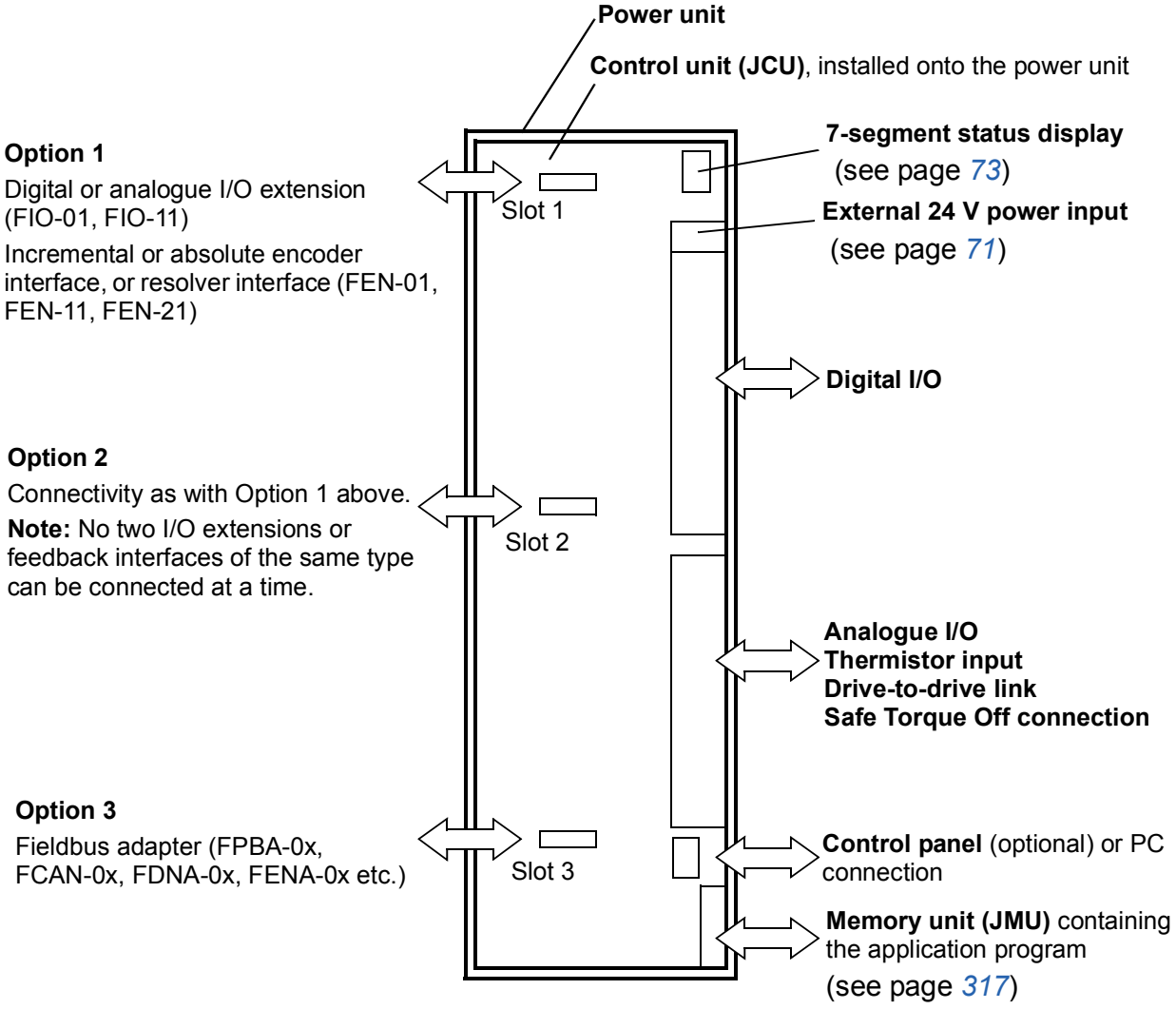

Type designation label

The type designation stated on the label contains information on the specifications and configuration of the drive. When contacting technical support on the drive, quote the complete type designation and serial number.

See the example label below.

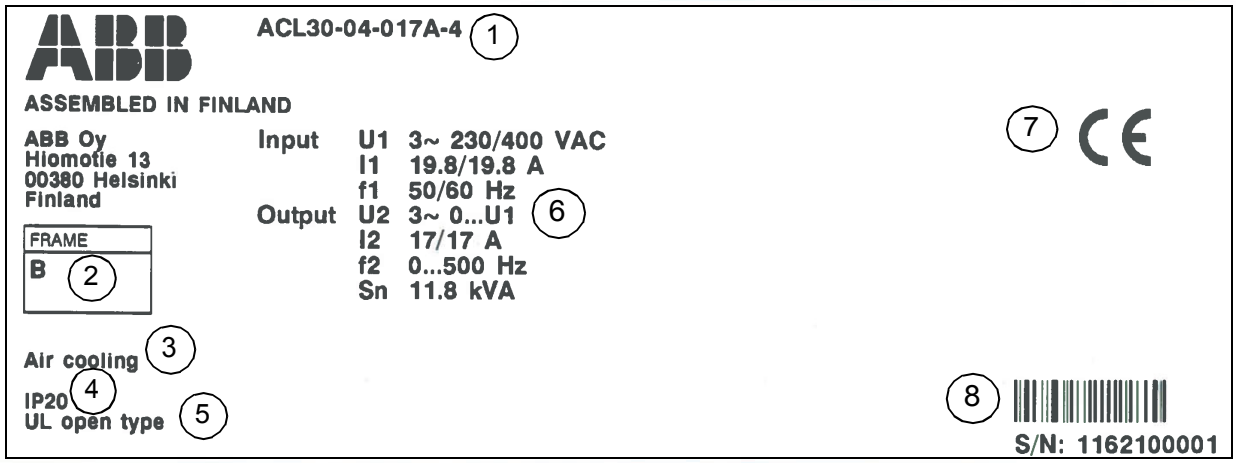

No.	Description
1	Type designation. • First digits from left (eg. ACL30-04-017A-4) – express the basic configuration • Optional selections (eg. +L501) – preceded by + signs
2	Frame size
3	Cooling method
4	Degree of protection
5	UL data
6	Ratings. See *Drive specifications* on page *319*.
7	CE marking
8	Serial number. • First digit – refers to the manufacturing plant. • Next four digits – refer to the unit's manufacturing year and week, respectively. • Remaining digits – complete the serial number so that there are no two units with the same number.

3

Planning the cabinet installation

Contents of this chapter

This chapter guides in planning the installation of a drive module into a user-defined cabinet. The issues discussed are essential for safe and trouble-free use of the drive system.

Note: The installation examples in this manual are provided only to help the installer in designing the installation.

WARNING! Installation must always be designed and made according to applicable local laws and regulations.
ABB does not assume any liability whatsoever for any installation which breaches the local laws and/or other regulations.

Constructing the cabinet

Check that...	☑
The cabinet frame is sturdy enough to carry the weight of the drive components, control circuitry and other equipments installed in it.	☐
The cabinet protects the drive module against contact and meets the requirements for dust and humidity specified in *Technical data* on page *319*.	☐
The layout is spacious enough for easy installation and maintenance. There should be sufficient space for cooling air flow, obligatory clearances, cables and cable support structures. See the layout example in *Cooling and degrees of protection* on page *39*.	☐
Proper grounding of • all cross-members or shelves on which the drive system components are mounted. • the components through their fastening points to the installation base. **Note**: It is recommended to mount the EMC filter (if present) and the drive module on the same mounting plate.	☐
The connecting surfaces are left unpainted.	☐

.

Main dimensions and free space requirements

The main dimensions of the drive modules as well as free space requirements are presented below. For more details, refer to chapter *Dimension drawings* on page *347*.

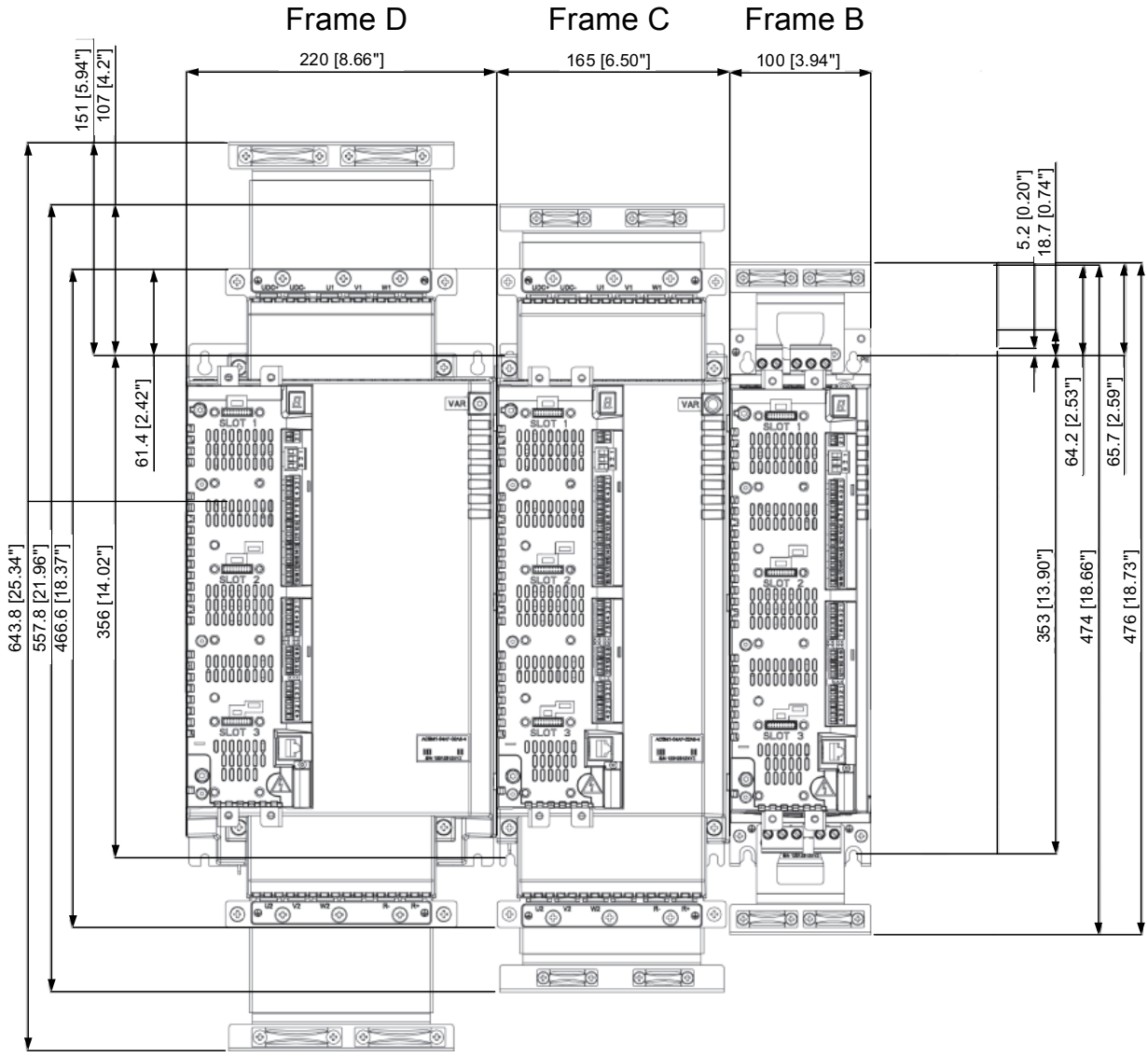

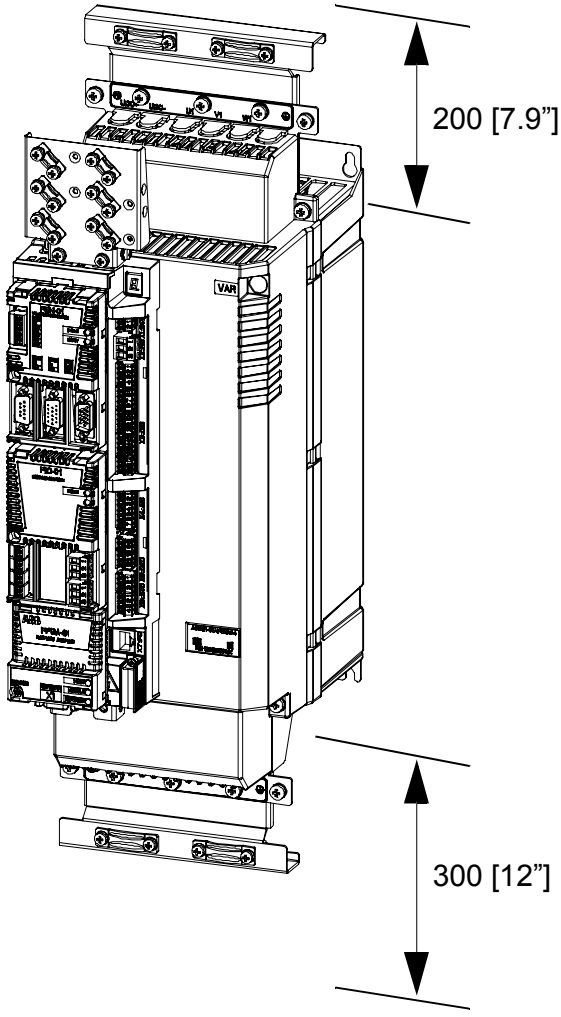

Note: The temperature of the cooling air entering the unit must not exceed the maximum allowed ambient temperature (see *Ambient conditions* on page *327*). Consider this when installing heat-generating components (such as other drives, mains chokes and brake resistors) nearby.

Cooling and degrees of protection

Check that...	☑
The cabinet has enough free space around the components for sufficient cooling. Observe the minimum clearances given for each component.	☐
The air inlets and outlets are equipped with gratings that guide the airflow, protect against contact, and prevent water splashes from entering the cabinet. The drawing below shows two typical cabinet cooling solutions. The air inlet is at the bottom of the cabinet, while the outlet is at the top, either on the upper part of the door or on the roof. 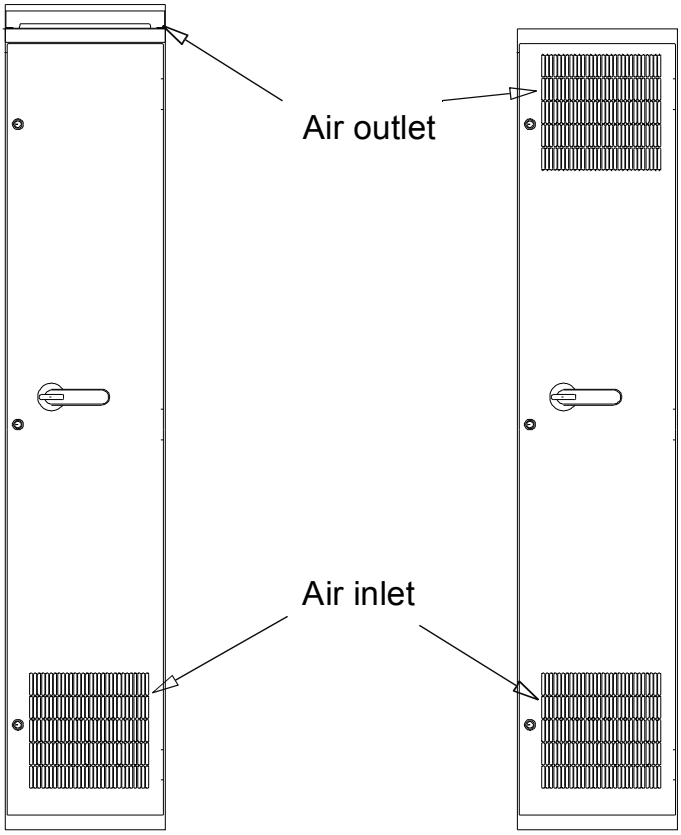 	☐
The air inlets and outlets are sufficient in size. **Note**: In addition to the power loss of the drive module, ventilate the heat dissipated by cables and other additional equipment.	☐
Cooling of the modules is arranged such that the requirements in *Noise levels* on page *322* are met. **Note**: The values apply to continuous nominal load. If the load is less than nominal, less cooling air is required.	☐
Ambient temperature is within the limits specified in section *Ambient conditions* on page *327*.	☐
The installation site is sufficiently ventilated.	☐
In IP22 cabinets, the internal cooling fans of the modules are usually sufficient to keep the component temperatures low enough.	☐
In IP54 cabinets, thick filter mats are used to prevent water splashes from entering the cabinet. This entails the installation of additional cooling equipment, such as a hot air exhaust fan.	☐

Preventing recirculation of hot air

Outside the cabinet

Prevent hot air circulation outside the cabinet by leading the outcoming hot air away from the area where the inlet air to the cabinet is taken. Possible solutions are listed below:

- gratings guide airflow at the air inlet and outlet
- air inlet and outlet at different sides of the cabinet
- cool air inlet in the lower part of the front door and an extra exhaust fan on the roof of the cabinet.

Inside the cabinet

Prevent hot air circulation inside the cabinet with leak-proof air baffle plates. No gaskets are usually required.

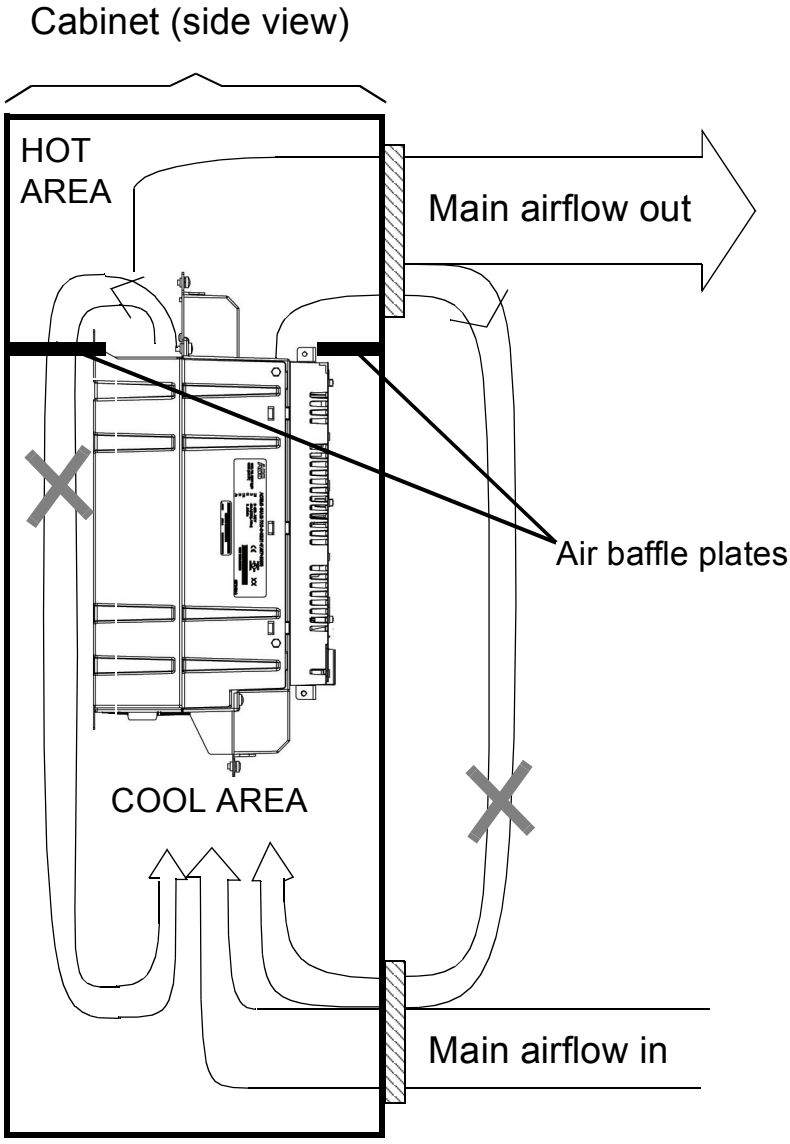

Cabinet heaters

Use a cabinet heater if there is a risk of condensation in the cabinet. Although the primary function of the heater is to keep the air dry, it may also be required for heating at low temperatures. When placing the heater, follow the instructions provided by its manufacturer.

4

Mechanical installation

Contents of this chapter

The chapter describes the mechanical installation procedure of the drive.

Checking the installation site

Before installation check the installation site according to the requirements below.

Check that...	☑
The frame details are according to the Dimension drawings (from page *347*)	☐
The allowed operating conditions of the drive matches the information in *Technical data.*	☐
The drive is mounted in the upright position.	☐
The wall on which the drive is to be mounted on is as even as possible.	☐
The drive mounting area is of non-flammable material.	☐
The drive mounting material is strong enough to carry the weight of the drive.	☐
The floor/material below the drive is non-flammable.	☐

Required tools

To install the drive mechanically, you need the following tools:

- drill with suitable bits
- screwdriver and/or wrench with a set of suitable bits (as appropriate for the installation hardware used)
- tape measure, if you will not use the provided mounting template.

Unpacking

The drive is delivered in a cardboard box. To open, remove any banding and lift the top off the box.

Check that the box contains...	☑
ACL30 drive module, with factory-installed options	☐
Three cable clamp plates (two for power cabling, one for control cabling) with screws	☐
Screw-type terminal blocks required to be attached to the headers on the JCU control unit and the power unit	☐

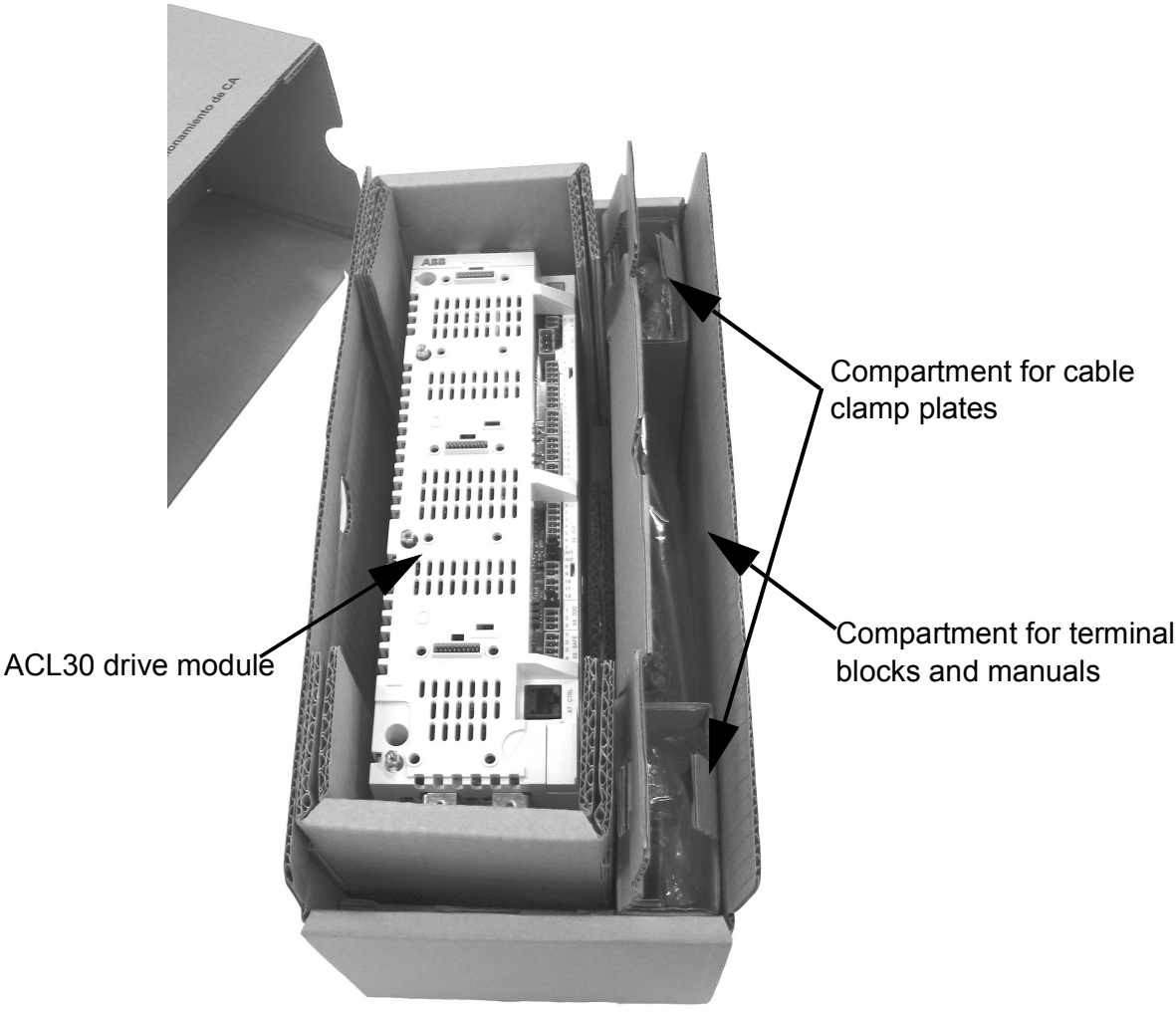

Checking the delivery

Check that there are no signs of damage. Before attempting installation and operation, check the information on the *Type designation label* (page *33*) of the drive module to verify that the unit is of correct type.

Installing the drive

You can mount the drive directly on the wall,

1. Mark the locations for the four holes. The mounting points are shown in *Dimension drawings*.
2. Fix the screws or bolts to the marked locations.
3. Position the drive onto the screws on the surface.

   Note: Lift the drive only by its chassis.
4. Tighten the screws.

Installing mains choke

See chapter *Mains chokes* on page *335*.

Installing EMC filter

See chapter *EMC filters* on page *339*.

Installing brake resistor

See chapter *Resistor braking* on page *343*.

5

Planning the electrical installation

Contents of this chapter

This chapter contains instructions for planning the electrical installation of the drive, for example, for checking the compatibility of the motor and drive, selecting cables, protections and cable routing.

WARNING! Installation must be designed and done according to the applicable local laws and regulations. ABB does not assume any liability whatsoever for any installation which breaches the local laws and/or other regulations.
If recommendations given by ABB are not followed, the drive may experience problems that the warranty does not cover.

Checking the compatibility of the motor and drive

Use an asynchronous AC induction motor or a permanent magnet motor with the drive. Make sure that the motor and the drive are compatible according to the *Drive specifications* on page *319*. The specification lists the typical motor power for each drive type.

Selecting the supply disconnecting device

According to safety regulations, equip each drive with a supply disconnecting device. Install a hand-operated input disconnecting device between the AC power source and the drive.

Note: You must be able to lock the disconnecting device to the open position for installation and maintenance work.

Requirements in European Union (EU) countries

To meet the European Union Directives, according to standard EN 60204-1, Safety of Machinery, the disconnecting device must be one of the following types:

- switch-disconnector of utilization category AC-23B (EN 60947-3)
- disconnector that has an auxiliary contact that in all cases causes switching devices to break the load circuit before the opening of the main contacts of the disconnector (EN 60947-3)
- circuit breaker suitable for isolation in accordance with EN 60947-2.

Requirements in non-EU countries

The disconnecting device must conform to the applicable local safety regulations.

Selecting the power cables

General rules

Select the input power and motor cables according to local regulations:

- The input power and the motor cables must be able to carry the corresponding load currents. For rated currents, see *Drive specifications* on page *319*.
- The cable must be rated for at least 70 °C (158 °F) maximum permissible temperature of conductor in continuous use. For the US, see *Additional US requirements* on page *52*.
- The conductivity of the PE conductor must be sufficient, see the table on page *49*.
- A 600 V AC cable is accepted for up to 500 V AC.

To comply with the EMC requirements of the CE mark, use an approved cable type in *Recommended power cable types* on page *51*.

Use symmetrical shielded cable to reduce the following properties:

- electromagnetic emission of the drive system
- stress on motor insulation
- bearing currents
- general drive wear.

Sufficient conductivity of the protective conductor

The protective conductor must always have an adequate conductivity. The table below shows the minimum cross-sectional area related to the phase conductor size according to IEC 61439-1 when the phase conductor and the protective conductor are made of the same metal.

Cross-sectional area of the phase conductors S (mm^2)	Minimum cross-sectional area of the corresponding protective conductor S_p (mm^2)
$S \leq 16$	S
$16 < S \leq 35$	16
$35 < S$	S/2

Note: See the IEC/EN 61800-5-1 requirement on grounding (page *17*).

Typical power cable sizes

The table below gives copper cable types with concentric copper shield for the drives with nominal current. The value separated by the plus sign means the diameter of the PE conductor.

Drive type ACL30-04...	Frame size	IEC[1)]	US
		Cu cable type	
		mm[2)]	AWG/kcmil
-06A0	B	3×1.5 +1.5	16
-09A0	B	3×1.5 +1.5	16
-013A	B	3×2.5 +2.5	14
-017A	B	3×4 +4	14
-023A	C	3×10 +10	6
-030A	C	3×10 +10	6
-050A	D	3×10 +10	6
-070A	D	3×10 +10	6

[1)]The cable sizing is based on maximum six cables laid on a cable ladder side by side, ambient temperature 30 °C, PVC insulation, surface temperature 70 °C.
For other conditions, size of the cables according to local safety regulations, appropriate input voltage and load current of the drive, see *Drive specifications* on page *319*.
[2)]Without additional choke

Alternative power cable types

The recommended power cable types and the not allowed power cable types to be used with the drive are presented below.

Recommended power cable types

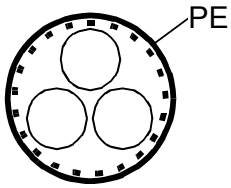	Symmetrical shielded cable with three phase conductors and a concentric PE conductor as the shield. The shield must meet the requirements of IEC 61439-1, see page *49*. Check with local/state/country electrical codes for allowance.
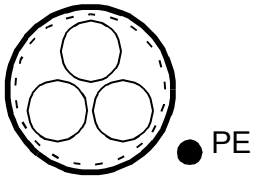	Symmetrical shielded cable with three phase conductors and a concentric PE conductor as the shield. A separate PE conductor is required if the shield does not meet the requirements of IEC 61439-1, see page *49*.
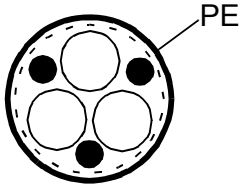	Symmetrical shielded cable with three phase conductors and symmetrically constructed PE conductor, and a shield. The PE conductor must meet the requirements of IEC 61439-1, see page *49*.

Power cable types for limited use

	A four-conductor system (three phase conductors and a protective conductor on a cable tray) is **not allowed for motor cabling** (it is allowed for input cabling).
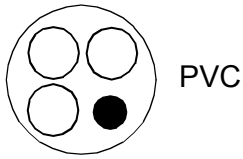	A four-conductor system (three phase conductors and a PE conductor in a PVC conduit) is **allowed for input cabling with phase conductor cross-section less than 10 mm^2 (8 AWG) or motors ≤ 30 kW (40 hp)**. Not allowed in the USA.
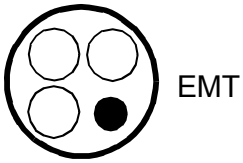	Corrugated or EMT cable with three phase conductors and a protective conductor is allowed for motor cabling with phase conductor cross section less than 10 mm^2 (8 AWG) or motors ≤ 30 kW (40 hp).

Not allowed power cable types

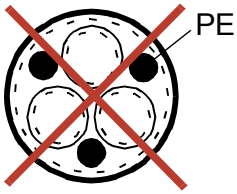	Symmetrical shielded cable with individual shields for each phase conductor is not allowed on any cable size for input or motor cabling.

Motor cable shield

If the motor cable shield is used as the sole protective earth conductor of the motor, make sure that the conductivity of the shield is sufficient. See section *General rules* above, or IEC 61439-1.

To effectively suppress radiated and conducted radio-frequency emissions, the cable shield conductivity must be at least 1/10 of the phase conductor conductivity. The requirements are easily met with a copper or aluminum shield. The minimum requirement of the motor cable shield of the drive is shown below. It consists of a concentric layer of copper wires with an open helix of copper tape or copper wire. The better and tighter the shield, the lower the emission level and bearing currents.

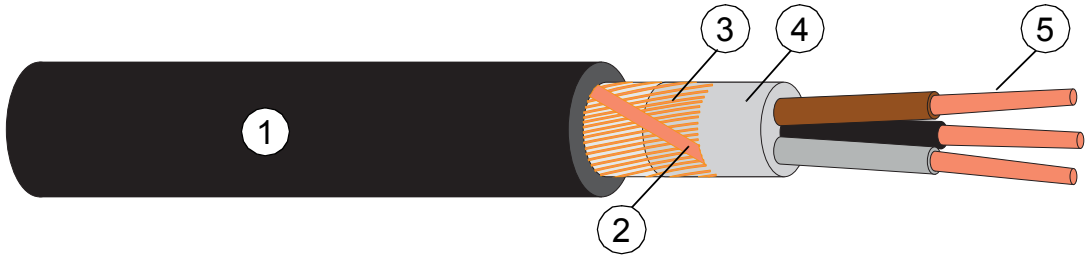

1	Sheath
2	Copper wire shield
3	Helix of copper tape or copper wire
4	Filling
5	Cable conductors

Additional US requirements

Use type MC continuous corrugated aluminum armor cable with symmetrical grounds or shielded power cable for the motor cables if metallic conduit is NOT USED. For the North American market, 600 V AC cable is accepted for up to 500 V AC. 1000 V AC cable is required above 500 V AC (below 600 V AC). For drives rated over 100 amperes, the power cables must be rated for 75 °C (167 °F).

Conduit

Couple separate parts of a conduit together: bridge the joints with a ground conductor bonded to the conduit on each side of the joint. Also bond the conduits to the drive enclosure and motor frame. Use separate conduits for input power, motor, brake resistor, and control wiring. When conduit is employed, type MC continuous corrugated aluminum armor cable or shielded cable is not required. A dedicated ground cable is always required.

Note: Do not run motor wiring from more than one drive in the same conduit.

Armored cable / shielded power cable

Six-conductor (three phases and three ground) type MC continuous corrugated aluminum armor cable with symmetrical grounds is available from the following suppliers (trade names in parentheses):

- Anixter Wire & Cable (Philsheath)
- BICC General Corp (Philsheath)
- Rockbestos Co. (Gardex)
- Oaknite (CLX).

Shielded power cables are available from the following suppliers:

- Belden
- LAPPKABEL (ÖLFLEX)
- Pirelli.

Selecting the control cables

Shielding

Use only shielded control cables.

Use a double-shielded twisted pair cable (figure *a* below) for analog signals. Use one individually shielded pair for each signal. Do not use common return for different analog signals.

A double-shielded cable (figure *a*) is the best alternative for low-voltage digital signals but a single-shielded twisted pair cable (figure *b*) is also acceptable.

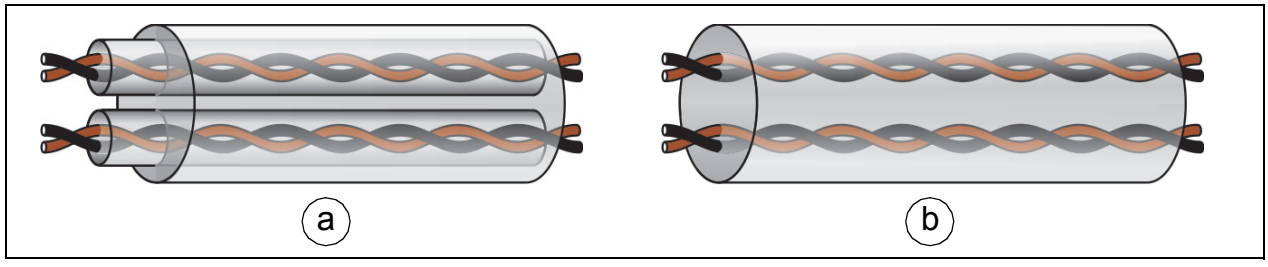

Signals in separate cables

Run analog and digital signals in separate, shielded cables.

Do not mix 24 V AC/DC and 115/230 V AC signals in the same cable.

Signals that can be run in the same cable

If their voltage does not exceed 48 V, relay-controlled signals can be run in the same cables as digital input signals. The relay-controlled signals should be run as twisted pairs.

Relay cable

The cable type with braided metallic screen (for example ÖLFLEX by LAPPKABEL, Germany) is tested and approved by ABB.

Routing the cables

General rules

Route the motor cable away from other cables. The motor cables of several drives can be put in parallel next to each other. Install the motor cable, input power cable and control cables on separate trays. Avoid long parallel runs of motor cables with other cables to decrease electromagnetic interference caused by the rapid changes in the drive output voltage.

Where control cables must cross power cables, make sure they are arranged at an angle as near to 90 degrees as possible. Do not run extra cables through the drive.

The cable trays must have good electrical bonding with each other and with the grounding electrodes. Aluminum tray systems can be used to improve local equalizing of potential.

A diagram of the cable routing is shown below.

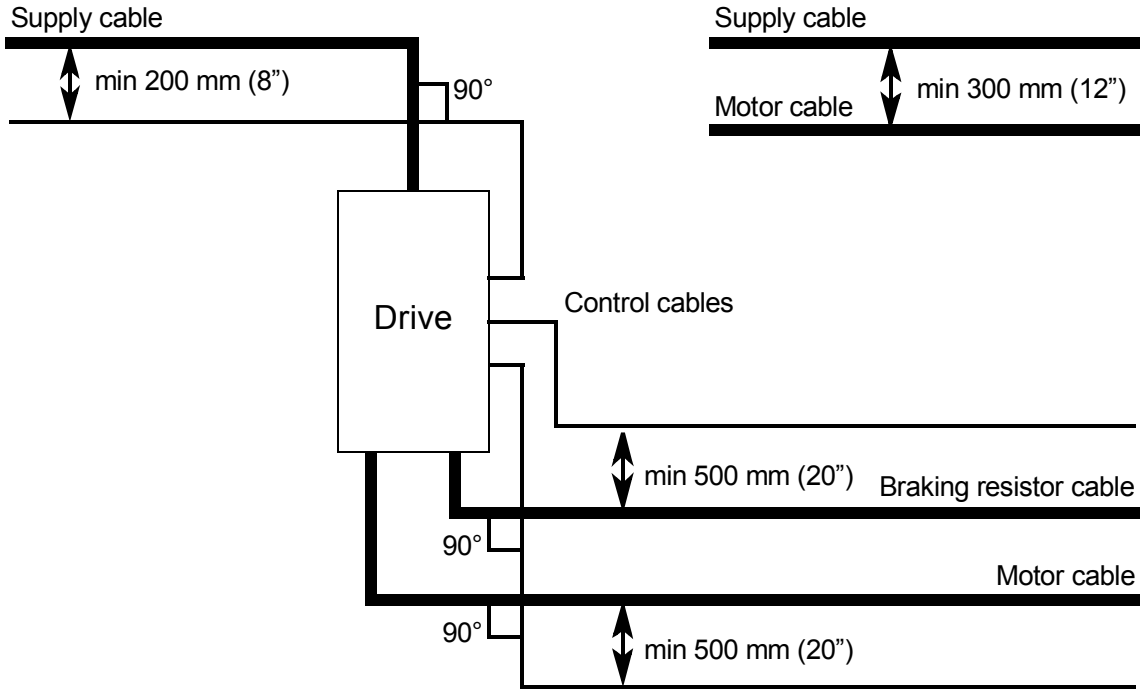

Separate control cable ducts

Put 24 V and 230 V (120 V) control cables in separate ducts unless the 24 V cable is insulated for 230 V (120 V) or insulated with an insulation sleeving for 230 V (120 V).

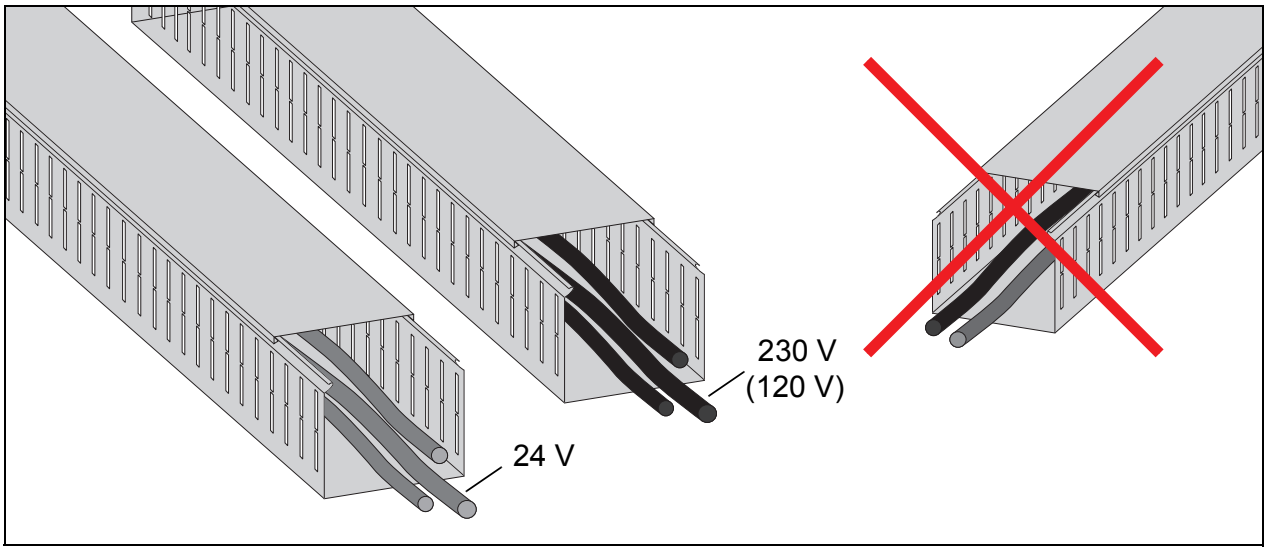

Continuous motor cable shield or enclosure for equipment on the motor cable

To minimize the emission level when there are safety switches, contactors, connection boxes or similar equipments on the motor cable between the drive and the motor:

European Union: Install the equipment in a metal enclosure with 360 degree grounding for the shields of both the incoming and outgoing cable, or connect the shields of the cables otherwise together.

US: Install the equipment in a metal enclosure in a way that the conduit or motor cable shielding runs consistently without breaks from the drive to the motor.

Implementing thermal overload and short-circuit protection

Protecting the drive and input power cable in short-circuits

Protect the drive and input cable with fuses as follows:

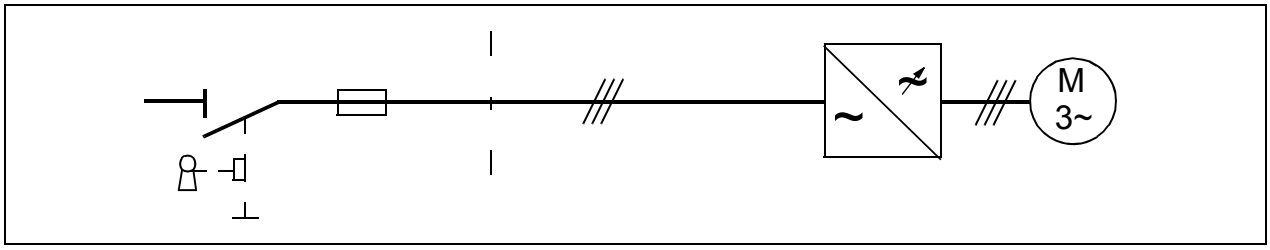

Size the fuses at the distribution board according to instructions given in chapter *Technical data* on page *319*. The fuses protect the input cable in short-circuit situations, restrict drive damage and prevent damage to adjoining equipment in case of a short-circuit inside the drive.

Protecting the motor and motor cable in short-circuits

The drive protects the motor cable and motor in a short-circuit situation when the motor cable is sized according to the nominal current of the drive. No additional protection devices are needed.

Protecting the drive and the input power and motor cables against thermal overload

The drive protects itself and the input and motor cables against thermal overload when the cables are sized according to the nominal current of the drive. No additional thermal protection devices are needed.

Protecting the motor against thermal overload

According to regulations, the motor must be protected against thermal overload and the current must be switched off when overload is detected. The drive includes a motor thermal protection function that protects the motor and switches off the current when necessary.

The most common temperature sensors are:

- motor sizes IEC180…225: thermal switch, eg, Klixon
- motor sizes IEC200…250 and larger: PTC or Pt100.

Protecting the drive against ground faults

The drive is equipped with an internal ground fault protective function to protect the unit against ground faults in the motor and motor cable. This is not a personnel safety or a fire protection feature. The ground fault protective function can be reduced with a parameter *46.03* EARTH FAULT.

Residual current device compatibility

The drive is suitable to be used with residual current devices of Type B.

Note: The EMC filter of the drive includes capacitors connected between the main circuit and the frame. These capacitors and long motor cables increase the ground leakage current and may cause fault current circuit breakers to function.

Implementing the Safe torque off function

See chapter *The Safe torque off function* on page *333*.

Using a contactor between the drive and the motor

The control of output contactor depends on how you use the drive. See also *Protecting the contacts of relay outputs* on page *59*.

- If a contactor is controlled by external control, open the contactor as follows:

1. Give a stop command to the drive.
2. Wait until the drive stops the motor.
3. Open the contactor.

WARNING! Do not open the output contactor when the drive is controlling the motor. The control operates faster than the contactor opens its contacts. If the contactor starts to open when the drive is controlling the motor, the control tries to maintain the load current and increases the drive output voltage to the maximum. This can cause damage to the contactor.

- If the contactor is controlled by drive, see parameter *03.07* MOT CONTACT CTRL.

Protecting the contacts of relay outputs

Inductive loads (relays, contactors, motors) cause voltage transients when switched off. The voltage transients can connect capacitively or inductively to other conductors and cause a malfunction in the system.

Use a noise attenuating circuit (varistors, RC filters [AC] or diodes [DC]) to minimize the EMC emission of inductive loads at switch-off. Install the noise attenuating circuit as close as possible to the inductive load. Do not install a noise attenuating circuit at the relay output.

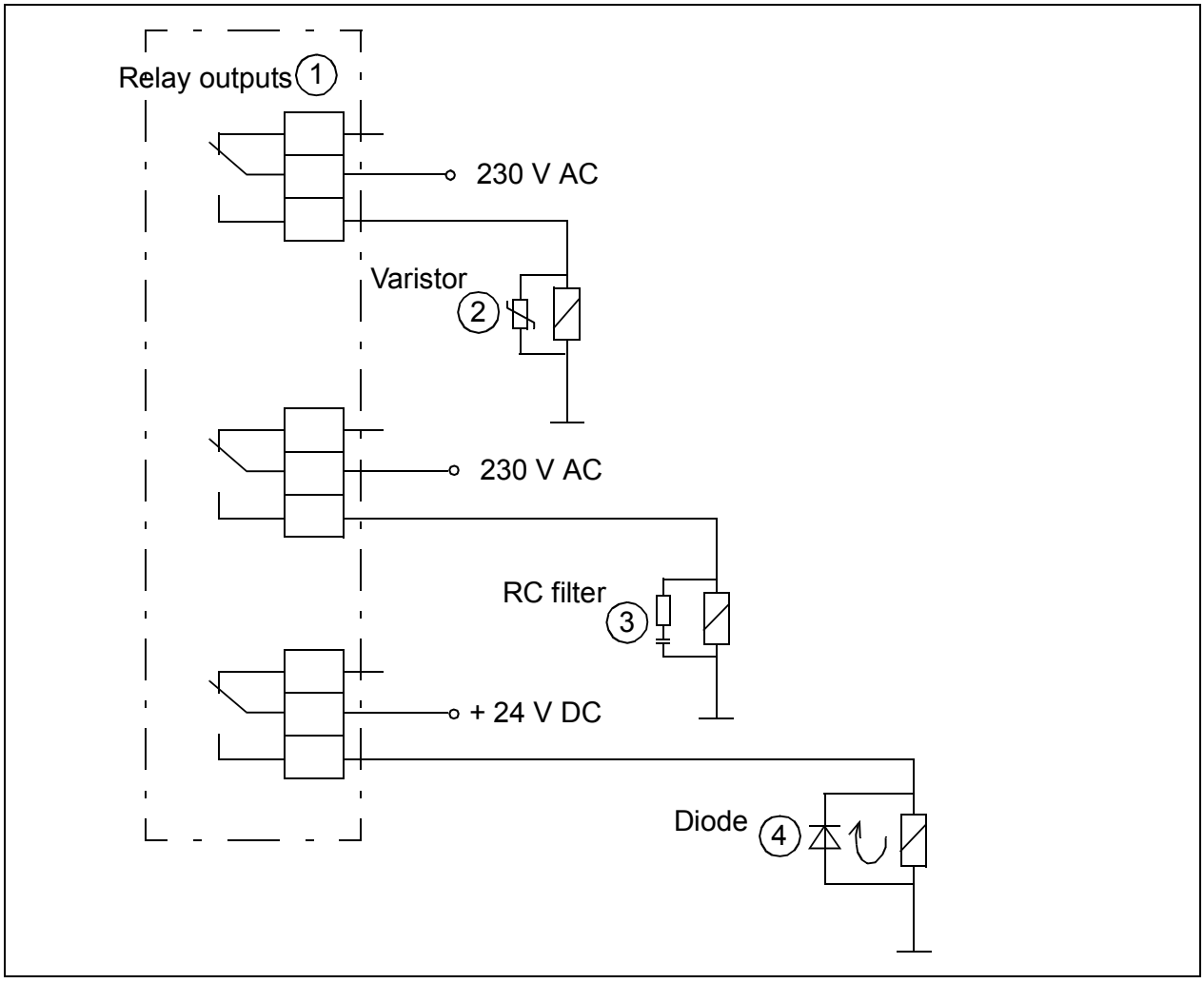

6

Electrical installation

Contents of this chapter

The chapter describes the electrical installation procedure of the drive.

WARNING! Only qualified electricians are allowed to do the work described in this chapter. Obey the instruction in chapter *Safety instructions* on page *13*. If you ignore them, injury or death, or damage to the equipment can occur.
Make sure the drive is disconnected from input power during installation. If the drive is already connected to the input power, wait for 5 minutes after disconnecting the input power.

WARNING! The installation must always be designed and made according to applicable local laws and regulations. ABB does not assume any liability whatsoever for any installation that breaches the local laws and/or other regulations.
If recommendations given by ABB are not followed, the drive system may experience problems that the warranty does not cover.

Checking the insulation of the assembly

Drive

WARNING! Do not make any voltage tolerance or insulation resistance tests on any part of the drive as testing can damage the drive.
Every drive is tested for insulation between the main circuit and the chassis at the factory. Also, there are voltage-limiting circuits inside the drive which cut down the testing voltage automatically.

Input power cable

Check the insulation of the input cable according to local regulations before connecting it to the drive.

Motor and power cable insulation

- Check that the motor cable is connected to the motor, and disconnected from the drive output terminals U2, V2 and W2.
- Measure the insulation resistance between the phase conductors and between each phase conductor and the Protective Earth conductor.

  Use a measuring voltage of 1000 V DC. The insulation resistance of an ABB motor must exceed 100 Mohm (reference value at 25 °C or 77 °F). For the insulation resistance of other motors, consult the manufacturer's instructions.

  Note: Moisture inside the motor casing reduces the insulation resistance. If moisture is suspected, dry the motor and repeat the measurement.

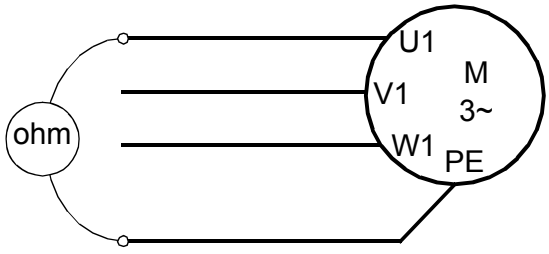

Break resistor assembly insulation

- Check that the resistor cable is connected to the resistor, and disconnected from the drive output terminals R+ and R-.
- At the drive end, connect the R+ and R- conductors of the resistor cable together. Measure the insulation resistance between the combined conductors and the PE conductor by using a measuring voltage of 1 kV DC. The insulation resistance must be higher than 1 Mohm.

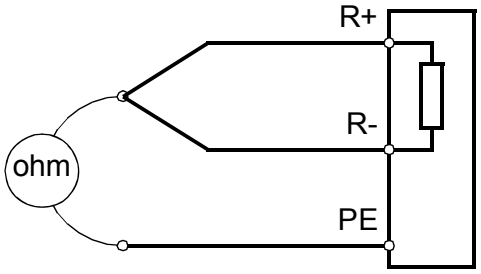

Connecting the power cables

Connection diagram

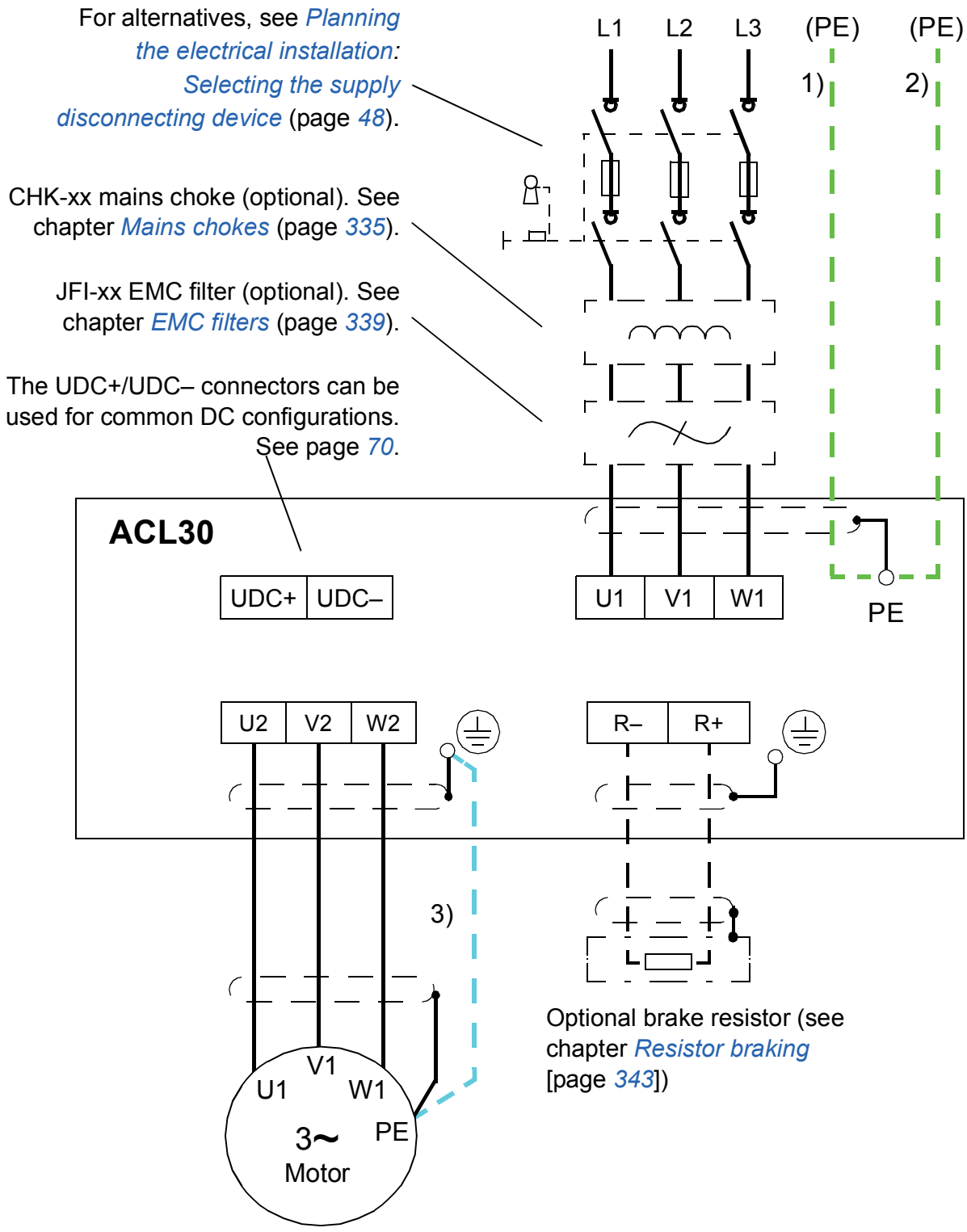

Notes:

• If shielded supply (input) cable is used, and the conductivity of the shield is not sufficient (see section *Motor cable shield* on page *52*), use a cable with a ground conductor (1) or a separate PE cable (2).

• For motor cabling, use a separate ground cable (3) if the conductivity of the cable shield is not sufficient (see section *Motor cable shield* on page *52*) and the cable has no symmetrical ground conductors.

Connection procedure

See the cabling drawings with tightening torques for each frame size on pages *68*.

1. Frame sizes C and D only: Remove the two plastic connector covers at the top and bottom of the drive. Each cover is fastened with two screws.
2. On IT (ungrounded) systems and corner grounded TN systems, remove the screws labeled VAR (located close to the supply terminals on the power unit) to disconnect the internal varistors.

WARNING! If a drive whose varistors/filters are not disconnected is installed on an IT system (an ungrounded power system or a high resistance grounded [over 30 ohms] power system), the system connects to the ground potential through varistors/filters of the drive. This may cause danger or damage the drive.
If a drive whose varistors/filters are not disconnected is installed on a corner grounded TN system, the drive will be damaged.

---

3. Fasten the two cable clamp plates included to the drive (see page *67*), one at the top, one at the bottom. The clamp plates are identical. Using the cable clamp plates as shown below will provide better EMC compliance, as well as act as a strain relief for the power cables.
4. Strip the power cables so that the shields are bare at the cable clamps.
5. Twist the ends of the cable shield wires into pigtails.
6. Strip the ends of the phase conductors.
7. Connect the phase conductors of the supply cable to the U1, V1 and W1 terminals of the drive.
   Connect the phase conductors of the motor cable to the U2, V2 and W2 terminals.
   Connect the conductors of the resistor cable (if present) to the R+ and R– terminals.
   With frame size C or D, attach the screw terminal lugs included to the conductors first. Crimp lugs can be used instead of the screw lugs.
8. Tighten the cable clamps onto the bare cable shields.
9. Crimp a cable lug onto each shield pigtail. Fasten the lugs to ground terminals.
   Note: Try to work out a compromise between the length of the pigtail and the length of unshielded phase conductors as both should ideally be as short as possible.
10. Cover visible bare shield and pigtail with insulating tape.

11. With frame size C or D, cut suitable slots on the edges of the connector covers to accommodate the supply and motor cables. Install the covers again. (Tighten the screws to 3 N·m [25 lbf·in]).
12. Secure the cables outside the unit mechanically.
13. Ground the other end of the supply cable shield or PE conductor(s) at the distribution board. In case a mains choke and/or an EMC filter is installed, make sure the PE conductor is continuous from the distribution board to the drive.

Grounding the motor cable shield at the motor end

For minimum radio frequency interference, ground the cable shield 360 degrees at the lead-through of the motor terminal box

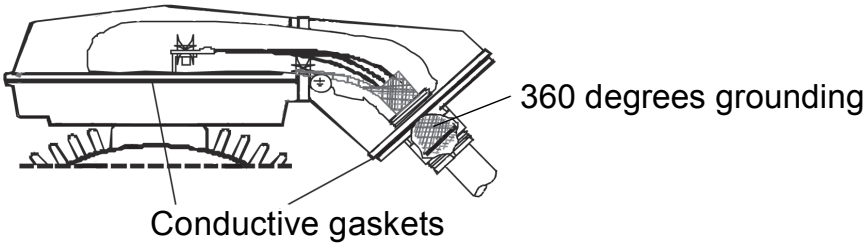

or ground the cable by twisting the shield so that the flattened shield is wider than 1/5 of its length.

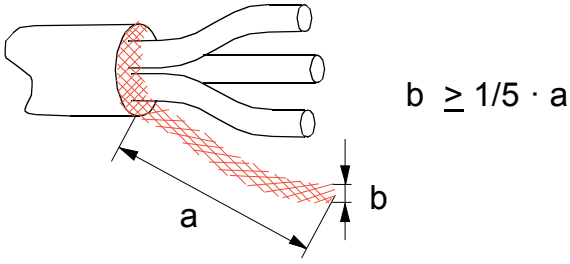

Installing power cable clamp plates

Two identical power cable clamp plates are included with the drive. The picture below depicts a frame size B drive; the installation is similar with other frame sizes.

Note: Pay attention to supporting the cables adequately within the installation enclosure especially if not using the cable clamps.

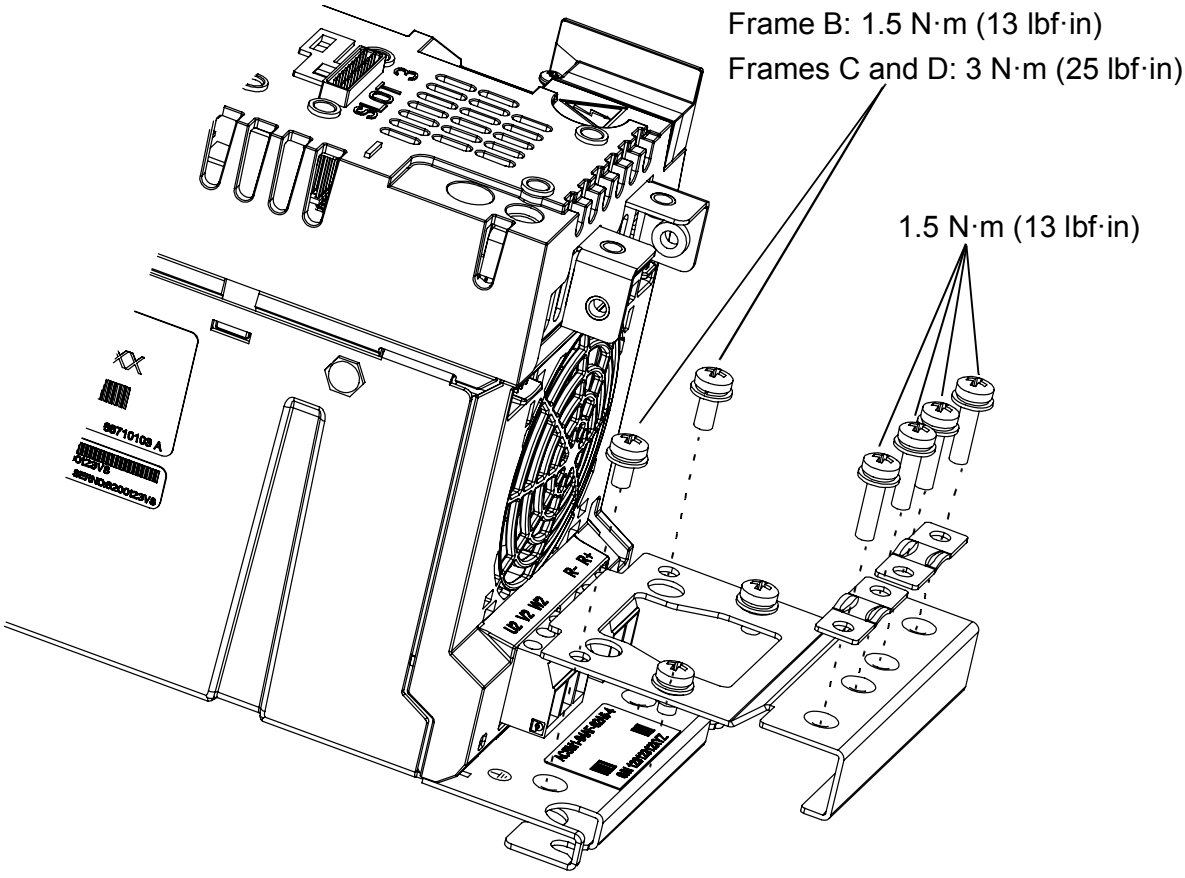

Power cable connection – frame size B

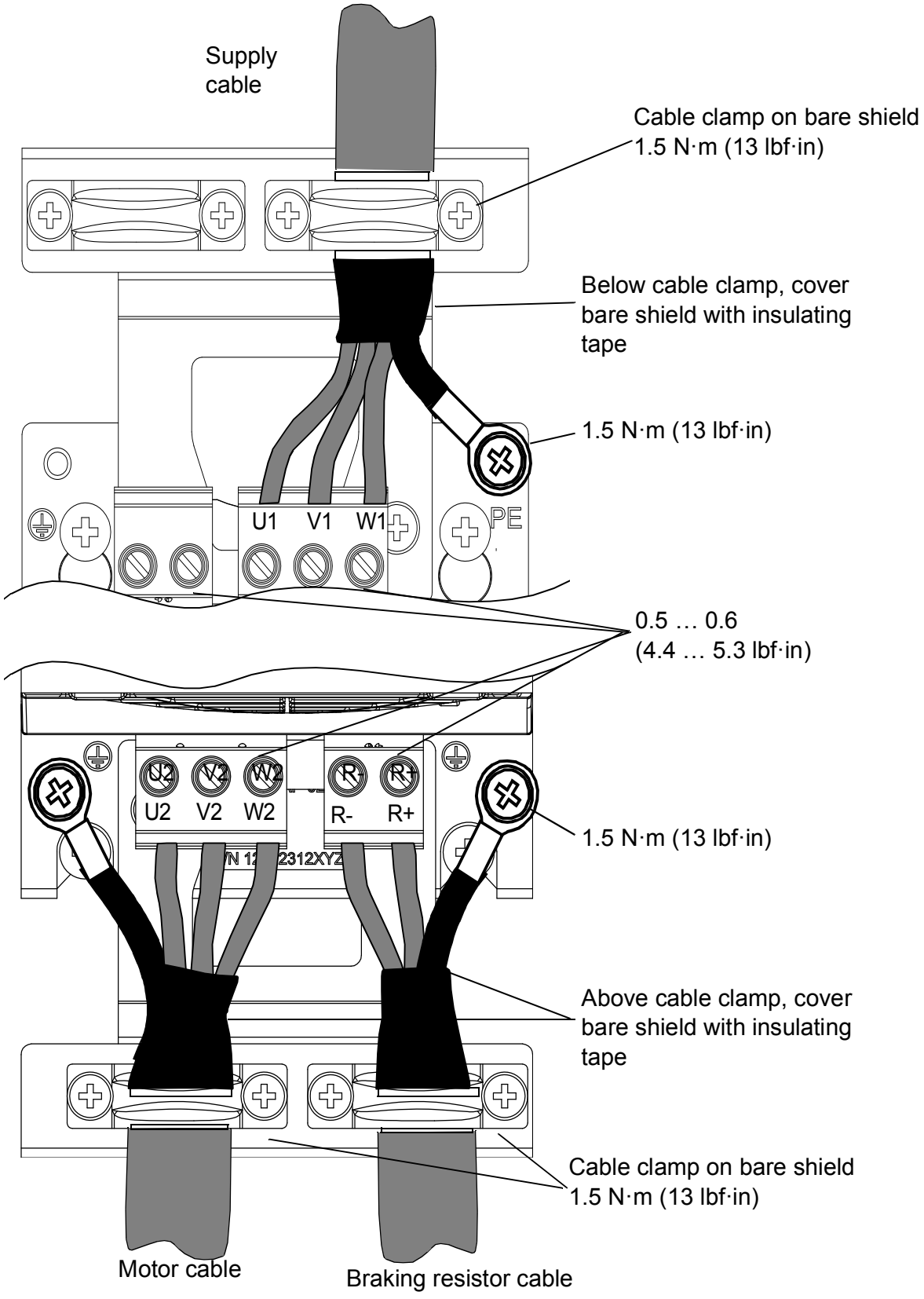

Power cable connection – frame sizes C and D (connector covers removed)

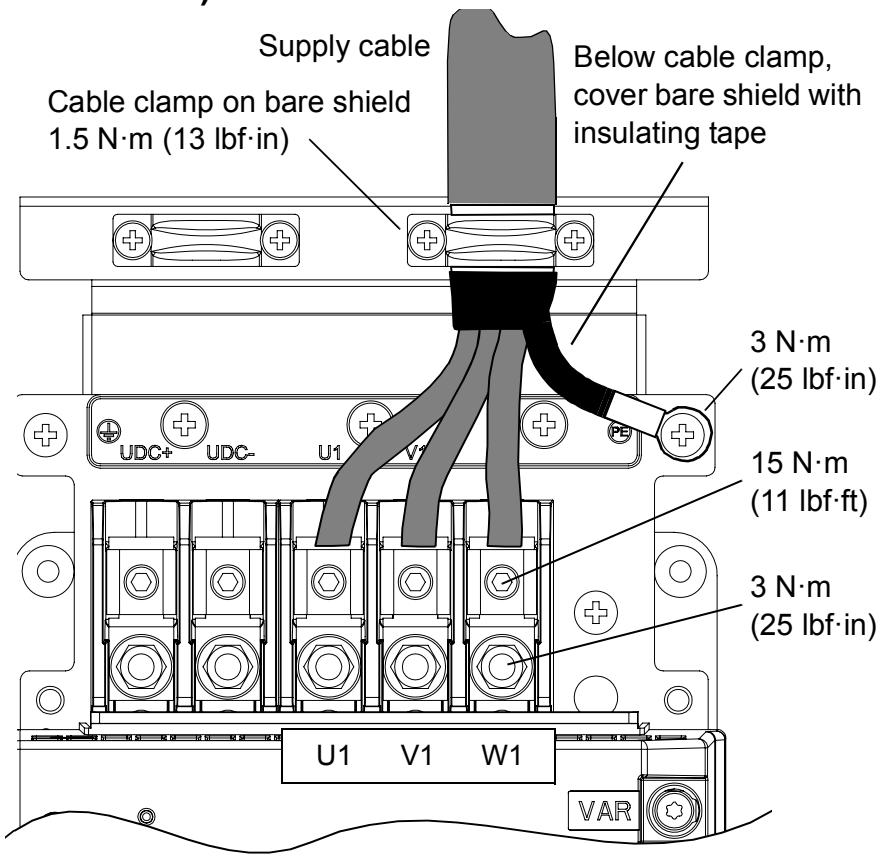

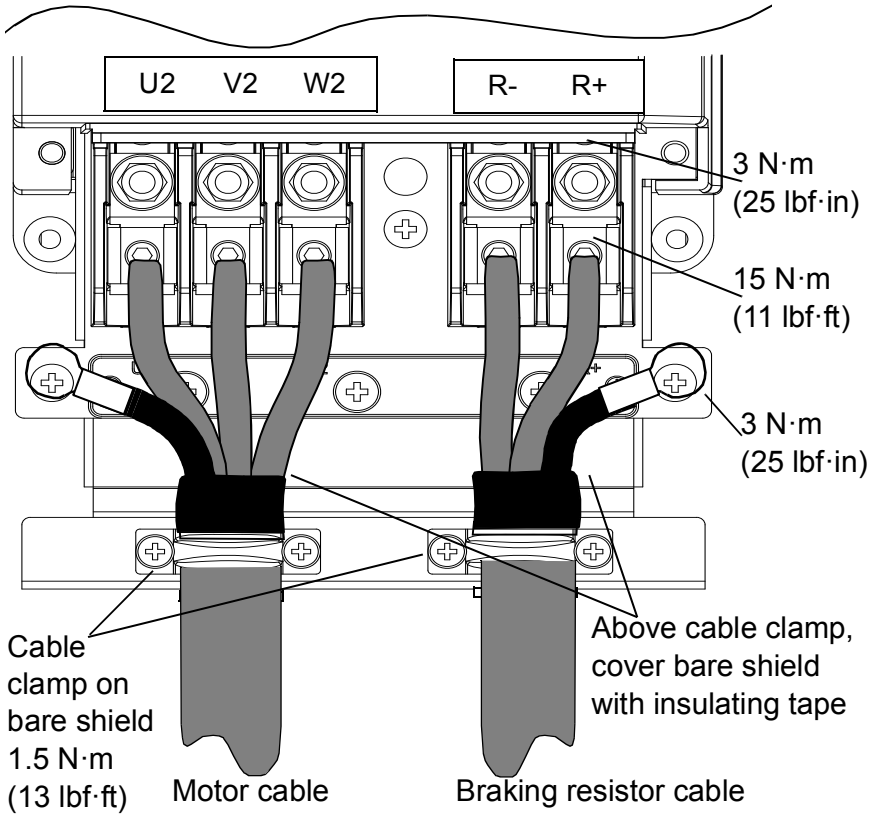

Screw lug detail

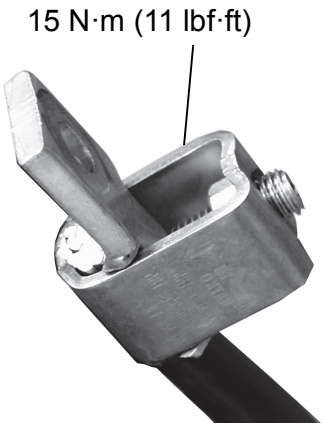

Direct lug connection

Instead of using the screw lugs included, the conductors of power cables can be connected to the drive terminals by removing the screw lugs and using crimp lugs.

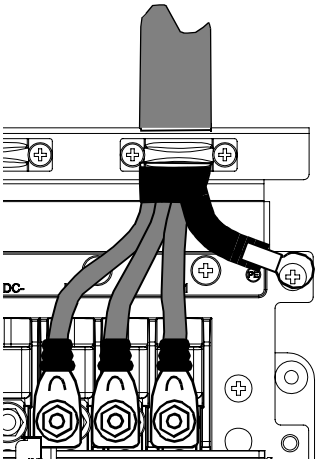

Connecting the control cables: JCU control unit

Notes:

*Total maximum current: 200 mA

The wiring shown is for demonstrative purposes only.

Further information of the usage of the connectors and jumpers are given in the text; more details are available in the chapter *Technical data*.

Wire sizes and tightening torques:

X2: 0.5 … 2.5 mm^2 (24…12 AWG). Torque: 0.5 N·m (5 lbf·in)
X3, X4, X5, X6: 0.5 … 1.5 mm^2 (28…14 AWG). Torque: 0.3 N·m (3 lbf·in)

Order of terminal headers and jumpers

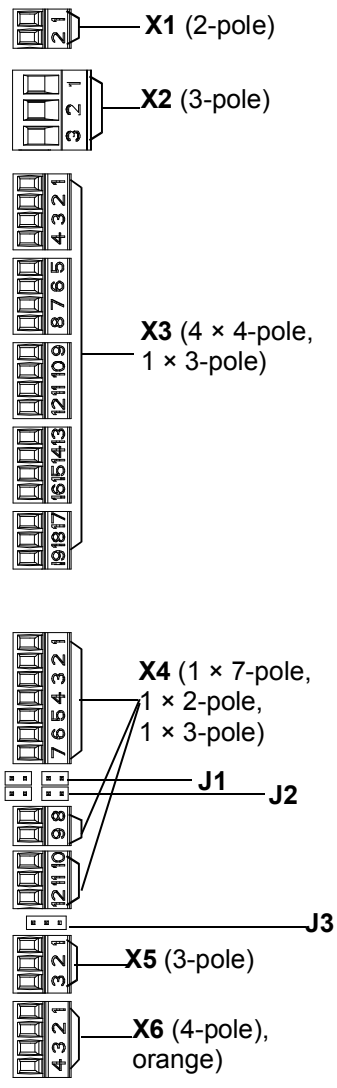

X1

External power input 24 V DC, 1.6 A	+24VI	1
	GND	2

X2

Relay output: Brake command open/close 250 V AC / 30 V DC, 2 A	NO	1
	COM	2
	NC	3

X3

+24 V DC*	+24VD	1
Digital I/O ground	DGND	2
Digital input 1: Start up (par *10.02*)	DI1	3
Digital input 2: Start down (par *10.03*)	DI2	4
+24 V DC*	+24VD	5
Digital I/O ground	DGND	6
Digital input 3	DI3	7
Digital input 4: Speed ref sel1 (par *80.06*)	DI4	8
+24 V DC*	+24VD	9
Digital I/O ground	DGND	10
Digital input 5: Speed ref sel2 (par *80.07*)	DI5	11
Digital input 6: Speed ref sel3 (par *80.08*)	DI6	12
+24 V DC*	+24VD	13
Digital I/O ground	DGND	14
Digital input/output 1: Fault reset (par *46.80*)	DIO1	15
Digital input/output 2: Drive ready (par. *06.01*, bit 0)	DIO2	16
+24 V DC*	+24VD	17
Digital I/O ground	DGND	18
Digital input/output 3: Drive fault (par. *06.01*, bit 10)	DIO3	19

X4

Reference voltage (+)	+VREF	1
Reference voltage (–)	-VREF	2
Ground	AGND	3
Analogue input 1 (Current or voltage, selectable by jumper J1)	AI1+	4
	AI1-	5
Analogue input 2 (Current or voltage, selectable by jumper J2)	AI2+	6
	AI2-	7
AI1 current/voltage selection		J1
AI2 current/voltage selection		J2
Thermistor input	TH	8
Ground	AGND	9
Analogue output 1 (current)	AO1 (I)	10
Analogue output 2 (voltage)	AO2 (U)	11
Ground	AGND	12

X5

Drive-to-drive link termination		J3
Drive-to-drive link. See separate section below.	B	1
	A	2
	BGND	3

X6

Safe Torque Off. Both circuits must be closed for the drive to start. See separate section below.	OUT1	1
	OUT2	2
	IN1	3
	IN2	4
Control panel connection		
Memory unit connection		

Jumpers

J1 – Determines whether Analogue input AI1 is used as a current or voltage input.

Current

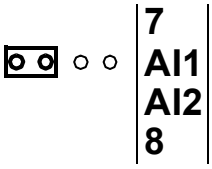

Voltage

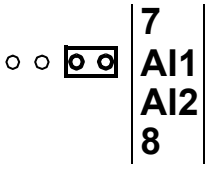

J2 – Determines whether Analogue input AI2 is used as a current or voltage input.

Current

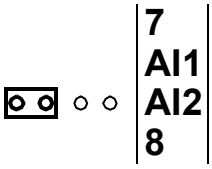

Voltage

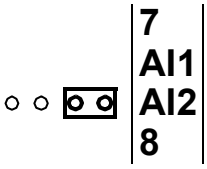

J3 – Drive-to-drive link termination. Must be set to the ON position when the drive is the last unit on the link.

Termination ON

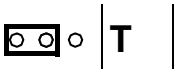

Termination OFF

External power supply for the JCU Control Unit (X1)

External +24 V (minimum 1.6 A) power supply for the JCU Control Unit can be connected to terminal block X1. Using an external supply is recommended if

- the application requires fast start after connecting the drive to the main supply
- fieldbus communication is required when the input power supply is disconnected.

Drive-to-drive link (X5)

This link is used for communication with embedded fieldbus.

Safe Torque Off (X6)

For the drive to start, both connections (OUT1 to IN1, and OUT2 to IN2) must be closed. By default, the terminal block has jumpers to close the circuit. Remove the jumpers before connecting an external Safe Torque Off circuitry to the drive.

For more information, see *Safe torque off function for ACL30 drive application guide* (3AXD50000045959 [English]).

Thermistor input (X4:8…9)

Motor temperature can be measured using PTC or KTY84 sensors connected to the thermistor input.

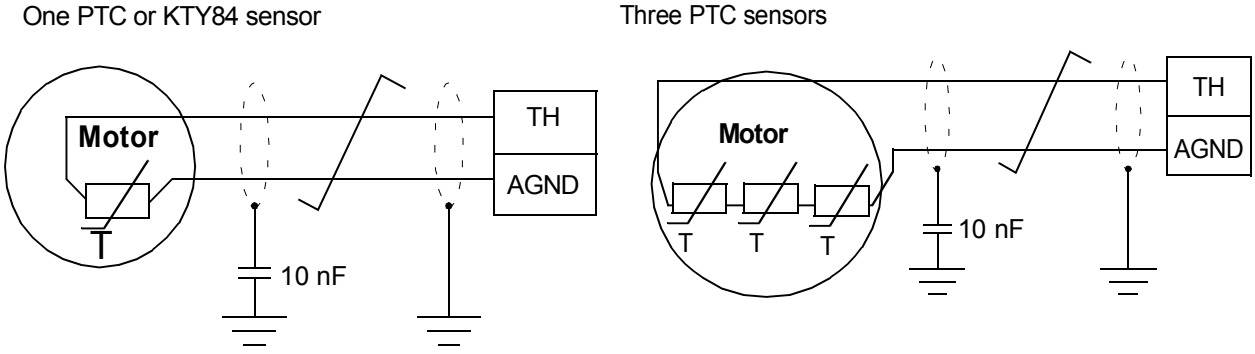

WARNING! As the thermistor input on the JCU control unit is not insulated according to IEC 60664, the connection of the motor temperature sensor requires double or reinforced insulation between the motor live parts and the sensor.

If the assembly does not fulfill the requirement, do any of the following:

- Protect the I/O board terminals against contact. Do not connect to any other equipments.

or

- Isolate the temperature sensor from the I/O terminals.

The 7-segment display on the JCU control unit

The following table describes the indications given by the 7-segment display on the JCU control unit. Multi-character indications are displayed as repeated sequences of characters.

Display	Meaning
L	Loading application program or data from the memory unit. This is the normal display immediately after powering up the drive.
□	Normal operation – drive stopped.
↖⌉	(Rotating display) Normal operation – drive running.
“E” followed by four-digit error code	System error. 9001, 9002 = Control unit hardware failure. 9003 = No memory unit connected. 9004 = Memory unit failure. 9007, 9008 = Loading of firmware from memory unit failed. 9009…9018 = Internal error. 9019 = Contents of memory unit corrupted. 9020 = Internal error. 9021 = Program versions of memory unit and drive incompatible. 9102…9108 = Internal error.
“A” followed by four-digit error code	Alarm generated by the application program. For error codes, see the Firmware Manual.
“F” followed by four-digit error code	Fault generated by the application program. For error codes, see the Firmware Manual.

Control cable grounding

The shields of all control cables connected to the JCU control unit must be grounded at the control cable clamp plate. Use four M4 screws to fasten the plate as shown in below left diagram. The plate can be fitted either at the top or bottom of the drive.

The shields should be continuous as close to the terminals of the JCU as possible. Only remove the outer jacket of the cable at the cable clamp so that the clamp presses on the bare shield. At the terminal block, use shrink tubing or insulating tape to contain any stray strands. The shield (especially in case of multiple shields) can also be terminated with a lug and fastened with a screw at the clamp plate. Leave the other end of the shield unconnected or ground it indirectly through a few nanofarads high-frequency capacitor (e.g. 3.3 nF / 630 V). The shield can also be grounded directly at both ends if they are *in the same ground line* with no significant voltage drop between the end points.

Keep any signal wire pairs twisted as close to the terminals as possible. Twisting the wire with its return wire reduces disturbances caused by inductive coupling.

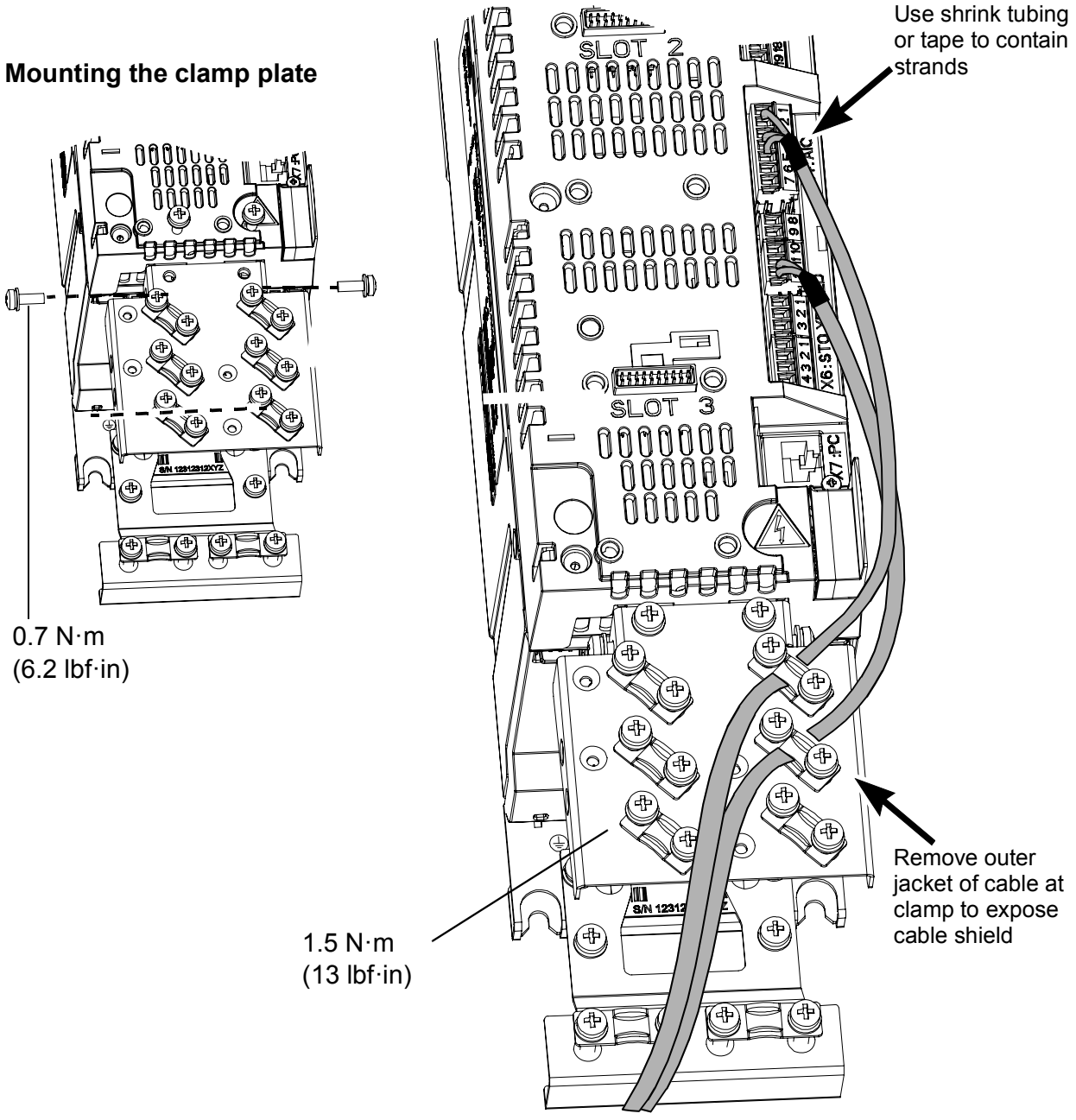

Installing the optional modules

Options such as fieldbus adapters, I/O extensions and encoder interfaces are inserted into slots on the JCU control unit. For the available slots, see the *Main circuit* diagram on page *30* and the *Control interfaces* diagram on page *32*. For specific installation and wiring instructions, see the appropriate option manual.

7

Installation checklist

Contents of this chapter

This chapter contains a list for checking the mechanical and electrical installation of the drive module.

Check the installation

Check the mechanical and electrical installation of the drive module before start-up. Go through the checklist below together with another person. Read the *Safety instructions* on the first pages of this manual before you work on the unit.

Check that...	☑
MECHANICAL INSTALLATION	
The ambient operating conditions are allowable. (See *Technical data: Drive specifications* and *Ambient conditions*.)	☐
The unit is fastened properly to the cabinet. (See *Planning the cabinet installation* and *Mechanical installation.*)	☐
The cooling air flows freely. (See *Cooling and degrees of protection*.)	☐
The motor and the driven equipment are ready for start. (See *Planning the electrical installation, Technical data: Motor connection*.)	☐
ELECTRICAL INSTALLATION	
The VAR screw is removed if the drive is connected to an IT (ungrounded) supply network. (See *Connecting the power cables: Connection procedure*.)	☐
The capacitors are reformed if stored over one year (contact local ABB representative for more information). (See *Maintenance: Reforming the capacitors*.)	☐
The drive is grounded properly. (See *Safety instructions: Grounding*.)	☐
The supply (input power) voltage matches the drive nominal input voltage.	☐

Check that...	☑
The supply (input power) is connected to U1/V1/W1 (UDC+/UDC- in case of a DC supply) and the terminals are tightened to specified torque. (See *Electrical installation*: *Connecting the power cables* and *Installing power cable clamp plates*.)	☐
Appropriate supply (input power) fuses and disconnector are installed. (See *Technical data*: *Supply cable fuses* and *Planning the electrical installation*: *Selecting the supply disconnecting device*.)	☐
The motor is connected to U2/V2/W2, and the terminals are tightened to specified torque. (See *Operation principle and hardware description*: *Main circuit*.)	☐
The brake resistor (if present) is connected to R+/R-, and the terminals are tightened to specified torque. (See *Electrical installation*: *Connection diagram*.)	☐
The motor cable (and brake resistor cable, if present) is routed away from other cables. (See *Planning the electrical installation*: *Routing the cables*.)	☐
There are no power factor compensation capacitors in the motor cable.	☐
The external control connections to the JCU control unit are Ok. (See *Electrical installation*: *Connecting the control cables: JCU control unit*.)	☐
There are no tools, foreign objects or dust from drilling inside the drive.	☐
Motor connection box and other covers are in place.	☐

8

Start-up and control

Contents of this chapter

This chapter contains the basic tasks to start up an ACL30 elevator drive.

A minimum set of elevator control functions required for operating an elevator is included. You can start-up the drive from the control panel or with the DriveStudio PC tool program. The start-up procedures presented below uses the control panel.

For detailed instructions on using the panel, see chapter *Using the control panel* on page *87*. For instructions on using DriveStudio, see *DriveStudio user's manual (3AFE68749026 [English])*.

Start-up the drive

The start-up procedure includes tasks performed only when the drive is powered up for the first time (for example, entering the motor data). After the first start-up, the drive can be powered up without using these start-up tasks. The procedure can be repeated later if start-up data needs to be changed.

In addition to the drive power-up, the procedure includes the following tasks:

- entering the motor data and performing the motor identification run
- setting up the encoder
- checking the Safe torque off circuits
- setting up the motor overtemperature protection
- setting up the following elevator control functions:
  - Start/stop control
  - Mechanical brake control
  - Speed reference scaling
  - Speed reference selection
  - Acceleration/deceleration selection
  - Jerk selection.

If an alarm or a fault is generated during the start-up, see section *Fault tracing* on page *289* for the possible causes and remedies. If problems continue, disconnect the main power and wait 5 minutes for the intermediate circuit capacitors to discharge and check the drive and motor connections.

Before you start, make sure that you have in hand the motor nameplate and encoder data (if needed).

Safety		
⚠	The start-up must be carried out only by a qualified electrician. Follow all *Safety instructions* from page *13* during the start-up procedure.	
☐	Check the installation. See *Installation checklist* on page *75*.	
☐	Check that the starting of the motor does not cause any danger.	
Power up, control panel basics		
☐	Connect the control panel to the drive. See *Connecting the panel to drive* instructions on page *90*.	
☐	Power up the drive. After a few moments, the 7-segment display on the JCU Control Unit is activated and the panel shows the Output mode (right).	7-segment display: L -> o Control panel: .00rpm 0.00 Hz 0.00 A 0.0 %
Note: The drive indicates an alarm (2021 NO MOTOR DATA) until the motor data is entered later in this procedure. This is completely normal.		
☐	Switch to local control to make sure that external control is disabled by pressing the LOC REM key on the control panel. Local control is indicated by the text “LOC” on the top row on the display. The two boxes at the bottom row of the display indicate the function of the two soft keys and . The contents of the boxes depend on the visible menu choices.	.00rpm 0.00 Hz 0.00 A 0.0 %
☐	Press MENU to access the Main menu. Within any menu, the desired selection is highlighted. Press the ▲ and ▼ keys to make a new choice; activate by pressing ENTER.	PARAMETERS FAULT LOGGER

Adjusting parameter values		
☐	In the Main menu, highlight PARAMETERS and press ENTER. • Use the ▲ and ▼ keys to browse the list of parameter groups. Highlight the desired group and press SEL to display the parameters within that group. • Highlight a parameter and press EDIT to adjust the value. • Use ▲ and ▼ to adjust the value. (When adjusting pointer parameters, use the NEXT key to move between parameter group, index and bit settings.) • Press SAVE to accept the new parameter value, CANCEL to retain the old value. • At any point, press CANCEL or EXIT to return to the previous level.	
Notes: For more detailed instructions on adjusting parameter values, see the following sections: • Selecting a parameter and changing its value on page *97* • Changing the value of value pointer parameters on page *99* • Pointing the bit pointer parameter to a bit value in another signal on page *101* • Changing bit pointer parameter value to 0 or 1 on page *103*.		
Changing the language		
☐	By default, the language of the text shown is English. If desired, the language can be changed.	*99.01* LANGUAGE
Entering motor data		
☐	Select the motor type: asynchronous or permanent magnet motor.	*99.02* MOTOR TYPE
☐	Enter the motor data from the motor nameplate. **Note:** Set the motor data to exactly the same value as on the motor nameplate. For example, if the motor nominal speed is 1470 rpm on the nameplate, setting the value of parameter *99.06* MOT NOM SPEED to 1500 rpm results in wrong operation of the drive. At least parameters *99.02*…*99.07* must be set. Better control accuracy can be achieved by setting also parameters *99.08*…*99.09*.	
☐	• Motor nominal current Allowed range: approximately 1/6 · I_{2n} … 2 · I_{2n} of the drive.	*99.03* MOT NOM CURRENT

☐	• Motor nominal voltage Allowed range: 1/6 · U_N … 2 · U_N of the drive. (U_N refers to the highest voltage in each nominal voltage range, that is 480 V AC for ACL30-04). With permanent magnet motors: The nominal voltage is the BackEMF voltage (at motor nominal speed). If the voltage is given as voltage per rpm, eg, 60 V per 1000 rpm, the voltage for 3000 rpm nominal speed is 3 × 60 V = 180 V. Note that the nominal voltage is not equal to the equivalent DC motor voltage (E.D.C.M.) value given by some motor manufactures. The nominal voltage can be calculated by dividing the E.D.C.M. voltage by 1.7 (= square root of 3).	*99.04* MOT NOM VOLTAGE
☐	• Motor nominal frequency Range: 5.0…500.0 Hz. With permanent magnet motor: If the frequency is not given on the motor nameplate, it has to be calculated with the following formula: $f = n \times p / 60$ where p = number of pole pairs, n = motor nominal speed.	*99.05* MOT NOM FREQ
☐	• Motor nominal speed Range: 0…30000 rpm.	*99.06* MOT NOM SPEED
☐	• Motor nominal power Range: 0.00…10000.00 kW.	*99.07* MOT NOM POWER
☐	• Motor nominal cosφ (not applicable to permanent magnet motors). This value can be set for better DTC control accuracy. If the value is not given by the motor manufacturer, use value 0 (ie, default value). Range: 0.00…1.00.	*99.08* MOT NOM COSFII
☐	• Motor nominal shaft torque. This value can be set for better DTC control accuracy. If the value is not given by the motor manufacturer, use value 0 (ie, default value). Range: 0.000…2147483.647 N•m.	*99.09* MOT NOM TORQUE
☐	After setting the motor parameters, drive generates the alarm ID-RUN to inform that the you need to perform the ID run.	Alarm: ID-RUN

Motor overtemperature protection		
☐	Select how the drive reacts when motor overtemperature is detected.	*46.07* MOT TEMP PROT
☐	Select the motor temperature protection. For motor temperature measurement connections, see section *Temperature sensors* on page *158*.	*46.08* MOT TEMP SOURCE
ID RUN (motor identification run)		
	WARNING! With rotating ID run, the motor can run at up to approximately 50…100% of the nominal speed during the ID run. MAKE SURE THAT IT IS SAFE TO RUN THE MOTOR BEFORE PERFORMING THE ID RUN!	
Note: Make sure that possible safe torque off and emergency stop circuits are closed during the ID run.		
☐	Select the motor identification method with parameter *99.10* IDRUN MODE. During the Motor ID run, the drive will identify the characteristics of the motor for optimum motor control. The ID run is performed at the next start of the drive. **Notes:** • The motor must be de-coupled from the elevator system during the rotating ID run (selection *IDrotating*) as well as if rotating autophasing (selection *Autophs turn*) is required (that is, the motor shaft must NOT be locked and the load torque must be < 10% during the ID run). • The drive does not control the mechanical brake of the motor open during the ID run. Make sure by some other means that the brake opens if the rotating ID run or rotating autophasing is required. **ROTATING ID** run should be selected whenever possible. **STANDSTILL ID** run should be selected only if the Normal ID run is not possible (the motor cannot be de-coupled from the elevator system). **AUTOPHASING** can only be selected after the ID run is performed once. Autophasing is used when an absolute encoder or a resolver (or encoder with commutation signals) is added to a permanent magnet motor, but there is no need to perform the ID run again. See parameter *99.10* IDRUN MODE for information on autophasing modes and section *Autophasing for permanent magnet synchronous motors* on page *167*.	*99.10* IDRUN MODE

☐	Start the motor by pressing (the START key) to activate the ID run. **Note:** Both DRIVE ENABLE and LIFT RUN ENABLE signals must be active. ID run is indicated by alarm ID-RUN on the panel display and by a rotating display on the 7-segment display.	*10.80* LIFT RUN ENABLE *10.04* DRIVE ENABLE Alarm: ID-RUN 7-segment display: L rotating display
☐	If the ID run is not successfully completed, fault ID-RUN FAULT is generated.	Fault: ID-RUN FAULT
Speed measurement with encoder		
Encoder feedback can be used for more accurate motor control. • Asynchronous motors: Optional • Permanent magnet motors: Mandatory Follow these instructions when encoder interface module FEN-xx is installed in drive option Slot 1 or 2.		
☐	Select the encoder to be used. For more information, see parameter group *90 ENC MODULE SEL* on page *268*.	*90.01* ENCODER SEL
☐	Set other necessary encoder parameters: • Absolute encoder parameters in group 91 (typically set parameters *91.01* SINE COSINE NR, *91.02* ABS ENC INTERF, and *91.04* POS DATA BITS). • Pulse encoder parameters in group 93 (typically set parameter *93.01* ENC PULSE NR).	*91.01*…*91.20* *93.01*…*93.09*
☐	Save new parameters settings into the permanent memory by setting parameter *16.05* PARAM SAVE to value *Save*.	*16.05* PARAM SAVE
☐	Set parameter *90.06* ENC PAR REFRESH to *Configure* so that the new parameter settings take effect.	*90.06* ENC PAR REFRESH
Safe torque off		
The Safe torque off function disables the control voltage of the power semiconductors of the drive output stage, thus preventing the inverter from generating the voltage required to rotate the motor. For safe torque off wiring, see chapter *The Safe torque off function* on page *333*.		
☐	If there is a safe torque off circuit in use, check that the circuit functions.	
☐	Select how the drive reacts when the Safe torque off function is active (that is, when the control voltage of the power semiconductors of the drive output stage is disabled).	*46.05* STO DIAGNOSTIC

Electrical braking and voltage control		
Electrical braking (a built-in brake chopper and brake resistor) is needed in elevator applications to allow the drive to dissipate regenerative energy. The chopper connects the brake resistor to the intermediate circuit of the drive whenever the DC voltage exceeds the maximum limit. If the DC voltage drops due to input power cut off, the undervoltage controller will automatically decrease the motor torque to keep the voltage above the lower limit.		
☐	• Set the brake chopper and resistor settings (typically set parameters *48.03* BR POWER MAX CNT and *48.04* R BR. • Check that the connection is functioning. For more information on the brake resistor connection, see chapter *Resistor braking* on page *343*.	*48.01*…*48.05*
Start/stop control		
☐	As a factory default, parameter *10.01* is set to *IN1 F IN2R*. • Start up: DI1 active (= 1) • Start down: DI2 active (= 1) **Note**: The drive will not start if both DI1 and DI2 are active (= 1).	*10.01* START FUNC *10.02* UP COMMAND *10.03* DOWN COMMAND
Mechanical brake control		
☐	Select the brake control function: brake control with monitoring or without monitoring.	*35.01* BRAKE CONTROL
☐	If you selected brake control with monitoring, activate the monitoring for 1-2 brake contactors through digital inputs.	*35.02* BRAKE MONITOR 1 *35.03* BRAKE MONITOR 2
☐	Based on the mechanical brake opening delay, define the brake open delay.	*35.04* BRAKE OPEN DELAY
☐	Define the brake modulation delay.	*35.05* MODULATION DELAY
☐	Define the brake close speed.	*35.06* BRAKE CLOSE SPEED
Speed reference scaling		
☐	Define the gear ratio.	*80.02* GEAR RATIO
☐	Define the sheave diameter in millimeters.	*80.03* SHEAVE DIAMETER
☐	Define the roping ratio.	*80.04* ROPING RATIO

Speed reference selection		
☐	Select the sources for the speed reference selection bit pointers *80.06*, *80.07*, *80.08* and *80.09*. As a factory default, *80.06* is set to point to DI4 (P.02.01.03), *80.07* to DI5 (P.02.01.04) and *80.08* to DI6 (P.02.01.05).	*80.06* SPEED REF SEL1 *80.07* SPEED REF SEL2 *80.08* SPEED REF SEL3 *80.09* SPEED REF SEL4
☐	Select the desired speed references to be used. For an overview of how the active speed reference is determined, see section *Speed reference selection* on page *137*. **Note:** If you do not intend to activate the inspection mode (see section *Inspection mode* on page *135*), you can use the inspection speed for maintenance operations in the normal travel mode. In this case, define the inspection speed reference with parameter *80.15* INSPECTION SPEED.	*80.15* INSPECTION SPEED
Notes: As a factory-set zero speed, the speed1 reference (*80.10* SPEED1) is fixed to a constant value 0 m/s.		
Acceleration/deceleration selection		
☐	Select the acceleration/deceleration set to be used in the normal travel mode. • 0 (FALSE) = Acc/dec set 1 is used • 1 (TRUE) = Acc/dec set 2 is used As a factory default, bit pointer parameter *25.80* is set to FALSE. If you want to change the default setting, set the selection to TRUE, or select the source from another parameter. Acceleration/deceleration sets can be also changed by a user settable speed limit *25.81* ACC/DEC CHNG SPD.	*25.80* ACC/DEC SEL *25.81* ACC/DEC CHNG SPD
☐	Define set1 acceleration and deceleration.	*25.82* ACC1 *25.83* DEC1
☐	Define set2 acceleration and deceleration.	*25.84* ACC2 *25.85* DEC2
☐	Define the inspection mode acceleration and deceleration.	*25.86* INSPECT MODE ACC *25.87* INSPECT MODE DEC
☐	Define the releveling mode acceleration and deceleration.	*25.90* RELVL ACC/DEC
Note: Parameter *25.85* DEC2 is internally used as the stopping deceleration and it is independent of the status of parameter *25.80* ACC/DEC SEL.		

Jerk selection

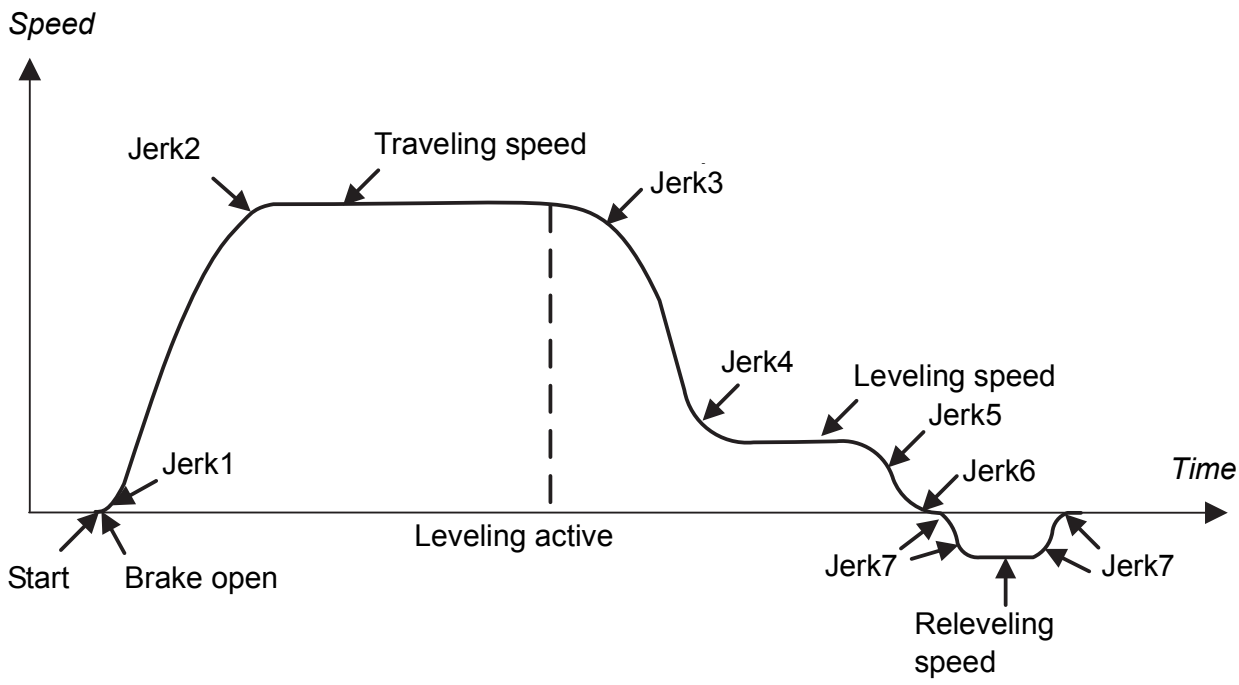

☐	As a factory default, bit pointer parameter *25.91* JERK DISABLE is fixed to 0 (FALSE), meaning that jerks are in use. Alternatively, you can select the source for jerk activation from another parameter. If you want to permanently disable the use of jerks, fix the selection to 1 (TRUE).	*25.91* JERK DISABLE
☐	Define acceleration start and end jerks with parameters *25.92* JERK1 and *25.93* JERK2, respectively.	*25.92* JERK1 *25.93* JERK2
☐	Define leveling deceleration start and end jerks with parameters *25.94* JERK3 and *25.95* JERK4, respectively.	*25.94* JERK3 *25.95* JERK4
☐	Define stopping start and end jerks with parameters *25.96* JERK5 and 25.96 JERK6, respectively.	*25.96* JERK5 *25.97* JERK6
☐	Define the releveling jerk with parameter *25.98* JERK7.	*25.98* JERK7

9

Using the control panel

Contents of this chapter

This chapter describes the features and operation of the ACS-CP-U control panel. You can use the control panel to control the drive, read the status data, and adjust the parameters.

Compatibility

The ACL30 elevator drive is compatible with control panel type ACS-CP-U, flash revision 4.5 or later.

See page 93 for how to find out the control panel version.

Features

The ACS-CP-U control panel provides the following features:

- alphanumeric control panel with an LCD display
- copy function – parameters can be copied to the control panel memory for later transferred to other drives or for backup of a particular system
- context sensitive help
- real time clock.

ACS-CP-U overview

The following table summarizes the key functions and displays on the ACS-CP-U control panel.

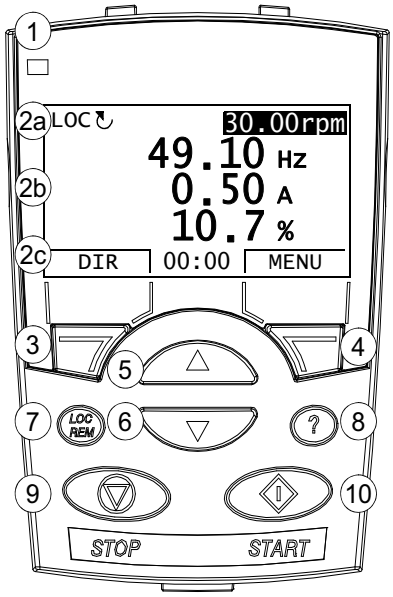

No.	Use
1	Status LED – Green for normal operation.
2	LCD display – Divided into three main areas: • 2a: Status line – variable, depending on the mode of operation, see section Status line on page *89*. • 2b: Center – variable; in general, shows signal and parameter values, menus or lists. Shows also faults and alarms. • 2c: Bottom line – shows current functions of the two soft keys and, if enabled, the clock display.
3	Soft key 1 – Function depends on the context. The text in the lower left corner of the LCD display indicates the function.
4	Soft key 2 – Function depends on the context. The text in the lower right corner of the LCD display indicates the function.
5	Up – • Scrolls up through a menu or list displayed in the center of the LCD display. • Increments a value if a parameter is selected. • Increments the reference value if the upper right corner is highlighted. • Holding the key down changes the value faster.
6	Down – • Scrolls down through a menu or list displayed in the center of the LCD display. • Decrements a value if a parameter is selected. • Decrements the reference value if the upper right corner is highlighted. • Holding the key down changes the value faster.
7	LOC/REM – Changes between local and remote control of the drive.
8	Help – Displays context sensitive information when the key is pressed. The information displayed describes the item currently highlighted in the center of the display.
9	STOP – Stops the drive in local control.
10	START – Starts the drive in local control.

Status line

The top line of the LCD display shows the basic status information of the drive.

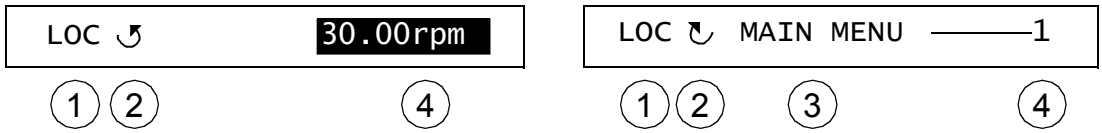

No.	Field	Alternatives	Significance
1	Control location	LOC	Drive control is local, that is, from the control panel.
		REM	Drive control is remote, such as the drive I/O or fieldbus.
2	State	↻	Forward shaft direction
		↺	Reverse shaft direction
		Rotating arrow	Drive is running at setpoint.
		Dotted rotating arrow	Drive is running but not at setpoint.
		Stationary arrow	Drive is stopped.
		Dotted stationary arrow	Start command is present, but the motor is not running, eg, because start enable is missing.
3	Panel operation mode		• Name of the current mode • Name of the list or menu shown • Name of the operation state, eg, REF EDIT.
4	Reference value or number of the selected item		• Reference value in the Output mode • Number of the highlighted item, eg, mode, parameter group or fault.

Installing the control panel

Connecting the panel to drive

The figure below shows the control panel connection to ACL30 drive.

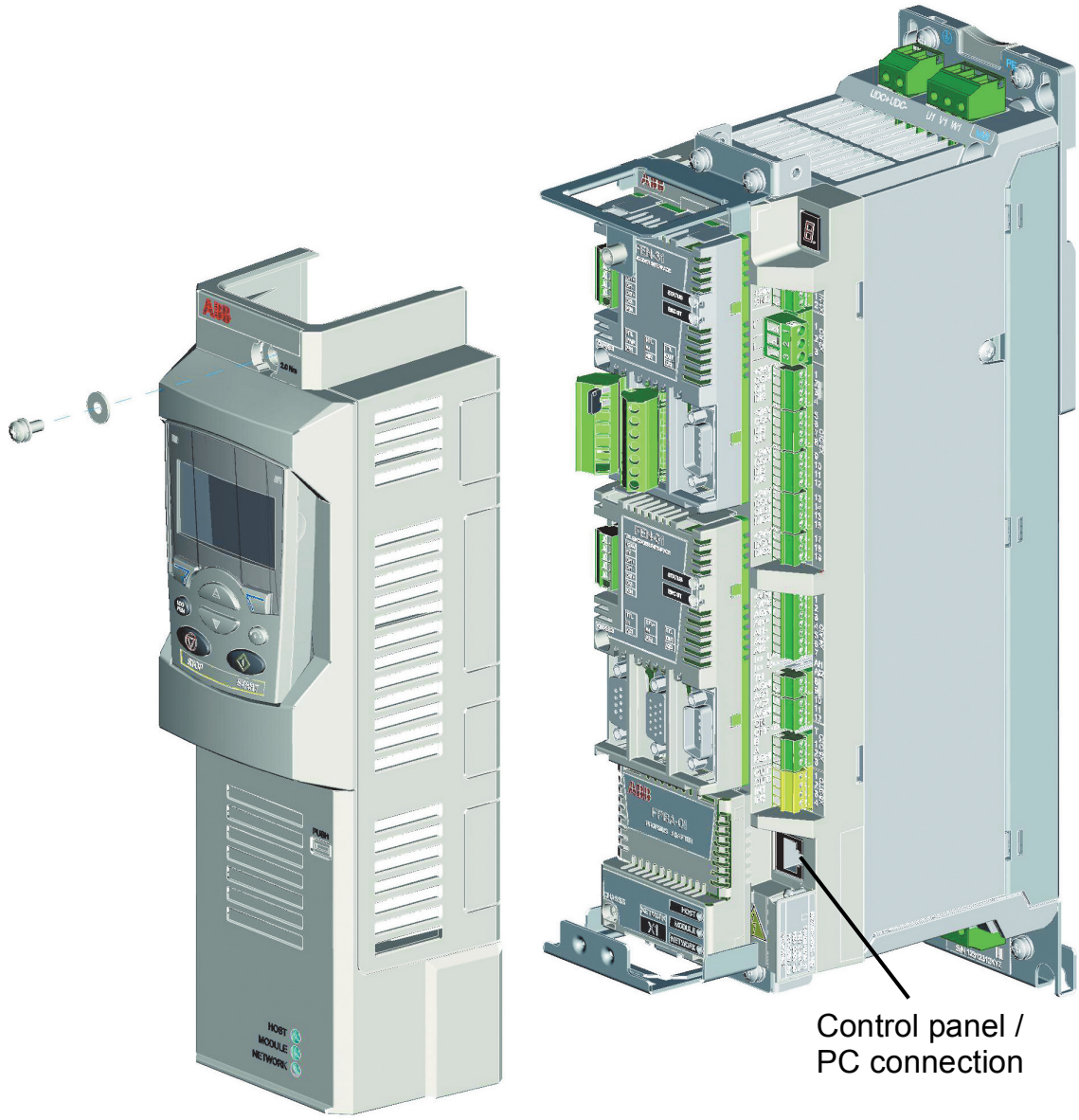

Mounting the control panel on the cabinet door

See *ACS-CP-U Control Panel IP54 Mounting Platform Kit Installation Guide* [3AUA0000049072 (English)].

Selecting the control panel cable

CAT5 straight-through network cable (max. 3 m) can be used. The cable is available from ABB, but other cables fulfilling the specifications of that cable can be used.

Operating the control panel

Basics of panel operation

You can operate the control panel with menus and keys. The keys include two context-sensitive soft keys, whose current function is indicated by the text shown in the display above each key.

You can,

1. Select an option, eg, operation mode or parameter, by entering the MENU state using soft key 2.
2. Scroll the ▲ and ▼ arrow keys until the option is highlighted.
3. Press the relevant soft key.
4. Use the right soft key to enter a mode.
5. Accept an option or save the changes.
6. Use the left soft key to cancel the changes made and return to the previous operation level.

Main menu

The panel provides ten options in the Main menu:

- Parameters
- Assistants
- Changed Par
- Fault Logger
- Time & Date
- Parameter Backup
- I/O Settings
- Reference Edit
- Drive Info
- Parameter Change Log.

In addition, the panel has an Output mode, which is used as default. In this mode, you can start, stop, change the direction, switch between local and remote control, modify the reference value and monitor up to three actual values.

For other tasks, first go to the Main menu and select the appropriate option on the menu. The status line (see Status line on page *89*) shows the name of the current menu, mode, item or state.

Indications

When a fault or alarm occurs, the panel goes automatically to the Fault mode showing the fault or alarm. You can reset the fault in the Output or Fault mode. The operation in these modes and options is described in the following sections.

Getting Help – Any mode

Step	Action	Display
1.	Press ? to read the context-sensitive help text for the item that is highlighted. If help text exists for the item, it is shown on the display.	LOC ↻ TIME & DATE ——6 TIME FORMAT DATE FORMAT SET TIME SET DATE DAYLIGHT SAVING EXIT 00:00 SEL LOC ↻ HELP Use daylight saving to enable or disable automatic clock adjustment according to daylight saving EXIT 00:00
2.	If the whole text is not visible, scroll the lines with keys ▲ and ▼.	LOC ↻ HELP to enable or disable automatic clock adjustment according to daylight saving changes EXIT 00:00
3.	After reading the text, return to the previous display by pressing EXIT.	LOC ↻ TIME & DATE ——6 TIME FORMAT DATE FORMAT SET TIME SET DATE DAYLIGHT SAVING EXIT 00:00 SEL

Finding panel version – any mode

Step	Action	Display
1.	Switch Off the power, if it is switched On. • If the panel cable can be disconnected easily, unplug the cable from the control panel or • If the panel cable cannot be disconnected easily, switch Off the drive control unit.	
2.	Keep key ? pressed down while you switch On the power and read the information. The display shows the following panel information: Panel SW: Panel firmware version ROM CRC: Panel ROM check sum Flash Rev: Flash content version Flash content comment. When you release the ? key, the panel goes to the Output mode.	PANEL VERSION INFO Panel SW: x.xx ROM CRC: xxxxxxxxxx Flash Rev: x.xx xxxxxxxxxxxxxxxxxxxx xxxxxxxxxxxxxxxxxxxx

Using basic operations – Any mode

How to start, stop and switch between local and remote control

You can start, stop and switch between local and remote control in any mode.

Note: To be able to start or stop the drive by using the control panel, the drive must be in local control.

Step	Action	Display
1.	To switch between remote control (REM shown on the status line) and local control (LOC shown on the status line), press (LOC/REM). **Note:** Switching to local control can be disabled with parameter *16.01* LOCAL LOCK. The very first time the drive is powered up, it is in remote control (REM) and controlled through the drive I/O terminals. To switch to local control (LOC) and control the drive using the control panel, press (LOC/REM). The result depends on how long you press the key: • If you release the key immediately (the display flashes “Switching to the local control mode”), the drive stops. Set the local control reference as instructed on page *96*. • If you press the key for about two seconds, the drive continues running as before. The drive copies the current remote values for the run/stop status and the reference, and uses them as the initial local control settings.	LOC ↻ MESSAGE Switching to the local control mode. 00:00
2	To stop the drive in local control, press (⊽).	The arrow (↻ or ↺) on the status line stops rotating.
3	To start the drive in local control, press (◇).	The arrow (↻ or ↺) on the status line starts rotating. It is dotted until the drive reaches the setpoint.

Output mode

In the Output mode, you can:

- monitor actual values of up to three signals
- change the direction of the motor rotation
- set the speed reference
- adjust the display contrast
- start, stop, change the direction and switch between local and remote control.

You get to the Output mode by pressing EXIT repeatedly.

The top right corner of the display shows the reference value. The center can be configured to show up to three signal values or bar graphs; see page *95* for instructions on selecting and modifying the monitored signals.

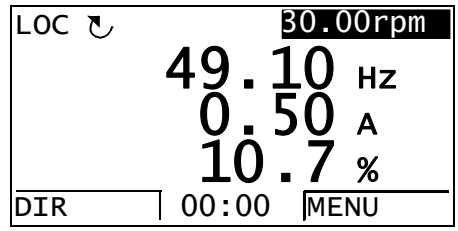

Changing the direction of motor rotation in Output mode

Step	Action	Display
1.	If you are not in the Output mode, press EXIT repeatedly until you get there.	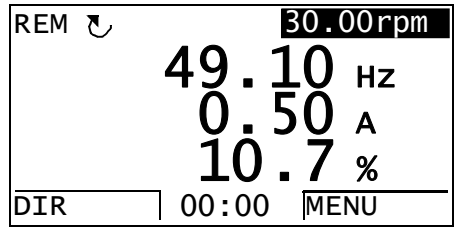
2.	If the drive is in remote control (REM shown on the status line), switch to local control by pressing LOC REM. The display briefly shows a message about changing the mode and then returns to the Output mode.	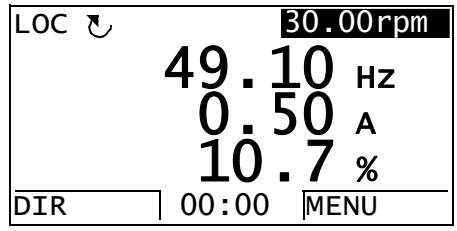
3.	To change the direction from forward (↻ shown on the status line) to reverse (↺ shown on the status line), or vice versa, press DIR.	

Setting speed reference in the Output mode

See also section Reference Edit option on page 122.

Step	Action	Display
1.	If you are not in the Output mode, press EXIT repeatedly until you get there.	REM ↻ 30.00rpm 49.10 Hz 0.50 A 10.7 % DIR 00:00 MENU
2.	If the drive is in remote control (REM shown on the status line), switch to local control by pressing LOC/REM. The display briefly shows a message about changing the mode and then returns to the Output mode.	LOC ↻ 30.00rpm 49.10 Hz 0.50 A 10.7 % DIR 00:00 MENU
3.	• To increase the highlighted reference value shown in the top right corner of the display, press ▲. The value changes immediately. It is stored in the permanent memory of the drive and restored automatically after power switch-off. • To decrease the value, press ▼.	LOC ↻ 31.00rpm 49.10 Hz 0.50 A 10.7 % DIR 00:00 MENU

Adjusting display contrast in the Output mode

Step	Action	Display
1.	If you are not in the Output mode, press EXIT repeatedly until you get there.	LOC ↻ 30.00rpm 49.10 Hz 0.50 A 10.7 % DIR 00:00 MENU
2.	• To increase the contrast, press keys MENU and ▲ simultaneously. • To decrease the contrast, press keys MENU and ▼ simultaneously.	LOC ↻ 30.00rpm 49.10 Hz 0.50 A 10.7 % DIR 00:00 MENU

Using the Parameters option

In the Parameters option, you can:

- view and change parameter values
- start, stop, change the direction and switch between local and remote control.

Selecting a parameter and changing its value

Step	Action	Display
1.	Go to the Main menu by pressing MENU if you are in the Output mode, otherwise by pressing EXIT repeatedly until you get to the Main menu.	LOC ↻ MAIN MENU ——— 1 PARAMETERS FAULT LOGGER TIME & DATE EXIT | 00:00 | ENTER
2.	Go to the Parameters option by selecting PARAMETERS on the menu with keys ▲ and ▼, and pressing ENTER.	LOC ↻ PAR GROUPS ——— 01 01 ACTUAL VALUES 02 I/O VALUES 03 CONTROL VALUES 05 LIFT CTRL SIGNALS 06 DRIVE STATUS EXIT | 00:00 | SEL
3.	Select the appropriate parameter group with keys ▲ and ▼. Press SEL.	LOC ↻ PAR GROUPS ——— 99 99 START-UP DATA 01 ACTUAL VALUES 02 I/O VALUES 03 CONTROL VALUES 05 LIFT CTRL SIGNALS EXIT | 00:00 | SEL LOC ↻ PARAMETERS ——— 9901 LANGUAGE ENGLISH 9902 MOTOR TYPE 9903 MOT NOM CURRENT 9904 MOT NOM VOLTAGE EXIT | 00:00 | EDIT
4.	Select the appropriate parameter with keys ▲ and ▼. The current value of the parameter is shown below the selected parameter.	LOC ↻ PARAMETERS ——— 9901 LANGUAGE 9902 MOTOR TYPE AM 9903 MOT NOM CURRENT 9904 MOT NOM VOLTAGE EXIT | 00:00 | EDIT

Step	Action	Display
	Press EDIT.	LOC ↻ PAR EDIT 9902 MOTOR TYPE AM [0] CANCEL 00:00 SAVE
5.	Specify a new value for the parameter with keys ▲ and ▼. Pressing the key once increments or decrements the value. Holding the key down changes the value faster. Pressing the keys simultaneously replaces the displayed value with the default value.	LOC ↻ PAR EDIT 9902 MOTOR TYPE PMSM [1] CANCEL 00:00 SAVE
6.	• To save the new value, press SAVE. • To cancel the new value and keep the original, press CANCEL.	LOC ↻ PARAMETERS 9901 LANGUAGE 9902 MOTOR TYPE PMSM 9903 MOT NOM CURRENT 9904 MOT NOM VOLTAGE EXIT 00:00 EDIT

Changing the value of value pointer parameters

In addition to the parameters shown above, there are two kinds of pointer parameters; value pointer parameters and bit pointer parameters. The value pointer parameter points to the value of another parameter/signal. The source parameter is given in format **P.xx.yy**, where xx = Parameter group; yy = parameter index.

Step	Action	Display
1.	Go to the Main menu by pressing MENU if you are in the Output mode, otherwise by pressing EXIT repeatedly until you get to the Main menu.	LOC ↻ MAIN MENU 1 PARAMETERS FAULT LOGGER TIME & DATE EXIT 00:00 ENTER
2.	Go to the Parameters option by selecting PARAMETERS on the menu with keys ▲ and ▼, and pressing ENTER.	LOC ↻ PAR GROUPS 01 01 ACTUAL VALUES 02 I/O VALUES 03 CONTROL VALUES 05 LIFT CTRL SIGNALS 06 DRIVE STATUS EXIT 00:00 SEL
3.	Select the appropriate parameter group with keys ▲ and ▼. Here the value pointer parameter *15.01* AO1 PTR is used as an example.	LOC ↻ PAR GROUPS 15 10 START/STOP 12 DIGITAL IO 13 ANALOGUE INPUTS 15 ANALOGUE OUTPUTS EXIT 00:00 SEL
4.	Press SEL to select the appropriate parameter group. Select the appropriate parameter with keys ▲ and ▼, the current value of each parameter is shown below it.	LOC ↻ PARAMETERS 1501 AO1 PTR P.01.05 1502 AO1 FILT TIME 1503 AO1 MAX 1504 AO1 MIN EXIT 00:00 EDIT
5.	Press EDIT. The current value of the value pointer parameter is shown, as well as the parameter group it points to.	LOC ↻ PAR EDIT 1501 AO1 PTR P.01.05 01 ACTUAL VALUES CANCEL 00:00 NEXT
6.	Specify a new parameter group for the value pointer parameter to point to with keys ▲ and ▼. The parameter group changes respectively.	LOC ↻ PAR EDIT 1501 AO1 PTR P.02.05 02 I/O VALUES CANCEL 00:00 NEXT

Step	Action	Display
7.	• To continue, press NEXT. • To cancel the new value and keep the original, press CANCEL. Specify a new parameter for the value pointer parameter to point to with keys ▲ and ▼. The parameter changes respectively.	LOC ↻ PAR EDIT 1501 AO1 PTR P.02.08 0208 AO1 CANCEL 00:00 SAVE
8.	• To save the new value for the pointer parameter, press SAVE. • To cancel the new value and keep the original, press CANCEL. The new value is shown in the parameters list.	LOC ↻ PARAMETERS 1501 AO1 PTR P.02.08 1502 AO1 FILT TIME 1503 AO1 MAX 1504 AO1 MIN EXIT 00:00 EDIT

Pointing the bit pointer parameter to a bit value in another signal

The bit pointer parameter points to the value of a bit in another signal, or can be fixed to 0 (FALSE) or 1 (TRUE). For the latter option, see page *103*. The bit pointer parameter points to a bit value (0 or 1) of one bit in a 32-bit signal. The first bit from the left is bit number 31, and the first bit from the right is bit number 0. For example, bit 01 stands for bit number 21 = 2, the second bit from the right, and number 00 stands for bit number 20 = 1, the first bit from the right.

When adjusting a bit pointer parameter on the control panel, POINTER is selected to define a source from another signal. A pointer value is given in format **P.xx.yy.zz**, where xx = Parameter group; yy = Parameter index, zz = Bit number.

Step	Action	Display
1.	Go to the Main menu by pressing MENU if you are in the Output mode, otherwise by pressing EXIT repeatedly until you get to the Main menu.	LOC ↻ MAIN MENU ——1 PARAMETERS FAULT LOGGER TIME & DATE EXIT | 00:00 | ENTER
2.	Go to the Parameters option by selecting PARAMETERS on the menu with keys ▲ and ▼, and pressing ENTER.	LOC ↻ PAR GROUPS ——01 01 ACTUAL VALUES 02 I/O VALUES 03 CONTROL VALUES 05 LIFT CTRL SIGNALS 06 DRIVE STATUS EXIT | 00:00 | SEL
3.	Select the appropriate parameter group with keys ▲ and ▼. Here the bit pointer parameter *12.04* DI01 OUT PTR is used as an example.	LOC ↻ PAR GROUPS ——12 12 DIGITAL IO 13 ANALOGUE INPUTS 15 ANALOGUE OUTPUTS 16 SYSTEM 20 LIMITS EXIT | 00:00 | SEL
4.	Press SEL to select the appropriate parameter group. Select the appropriate parameter with keys ▲ and ▼. The current value of each parameter is shown below its name.	LOC ↻ PARAMETERS —— 1201 DI01 CONF9901 1202 DI02 CONF 1203 DI03 CONF 1204 DI01 OUT PTR P.01.01.00 EXIT | 00:00 | EDIT
5.	Press EDIT.	LOC ↻ PAR EDIT —— 1204 DI01 OUT PTR Pointer CANCEL | 00:00 | NEXT

Step	Action	Display
6.	Press NEXT. The current value of the bit pointer parameter is shown, as well as the parameter group it points to.	LOC ↻ PAR EDIT 1204 DI01 OUT PTR P.01.01.00 01 ACTUAL VALUES CANCEL 00:00 NEXT
7.	Specify a new parameter group for the bit pointer parameter to point to with keys ▲ and ▼. The parameter group changes respectively.	LOC ↻ PAR EDIT 1204 DI01 OUT PTR P.06.01.00 06 DRIVE STATUS CANCEL 00:00 NEXT
8.	• To continue, press NEXT. • To cancel the new value and keep the original, press CANCEL. Specify a new parameter for the bit pointer parameter to point to with keys ▲ and ▼. The parameter name changes respectively.	LOC ↻ PAR EDIT 1204 DI01 OUT PTR P.06.01.00 0601 STATUS WORD 1 CANCEL 00:00 NEXT
9.	• To continue, press NEXT. • To cancel the new value and keep the original, press CANCEL. Specify a new bit for the bit pointer parameter to point to with keys ▲ and ▼. The bit number and name (if defined) change respectively. Here bit 00 stands for bit number 2^0 = 1, the first bit from the right in a 32-bit signal.	LOC ↻ PAR EDIT 1204 DI01 OUT PTR P.06.01.00 00 READY CANCEL 00:00 SAVE
10.	• To save the new value for the bit pointer parameter, press SAVE. • To cancel the new value and keep the original, press CANCEL. The new value is shown in the parameters list.	LOC ↻ PARAMETERS 1201 DI01 CONF9901 1202 DI02 CONF 1203 DI03 CONF 1204 DI01 OUT PTR P.06.01.00 EXIT 00:00 EDIT

Changing bit pointer parameter value to 0 or 1

The bit pointer parameter can be fixed to constant value of 0 (FALSE) or 1 (TRUE).

When adjusting a bit pointer parameter on the control panel, CONST is selected to fix the value to 0 (displayed as C.FALSE.) or 1 (C.TRUE.).

Step	Action	Display
1.	Go to the Main menu by pressing MENU if you are in the Output mode, otherwise by pressing EXIT repeatedly until you get to the Main menu.	LOC ↻ MAIN MENU ———1 PARAMETERS FAULT LOGGER TIME & DATE EXIT | 00:00 | ENTER
2.	Go to the Parameters option by selecting PARAMETERS on the menu with keys ▲ and ▼, and pressing ENTER.	LOC ↻ PAR GROUPS ——01 01 ACTUAL VALUES 02 I/O VALUES 03 CONTROL VALUES 05 LIFT CTRL SIGNALS 06 DRIVE STATUS EXIT | 00:00 | SEL
3.	Select the appropriate parameter group with keys ▲ and ▼. Here the bit pointer parameter *12.04* DI01 OUT PTR is used as an example.	LOC ↻ PAR GROUPS ——12 12 DIGITAL IO 13 ANALOGUE INPUTS 15 ANALOGUE OUTPUTS 16 SYSTEM 20 LIMITS EXIT | 00:00 | SEL
4.	Press SEL to select the appropriate parameter group. Select the appropriate parameter with keys ▲ and ▼. The current value of each parameter is shown below its name.	LOC ↻ PARAMETERS ——— 1201 DI01 CONF9901 1202 DI02 CONF 1203 DI03 CONF 1204 DI01 OUT PTR P.06.02.02 EXIT | 00:00 | EDIT
5.	Press EDIT.	LOC ↻ PAR EDIT ——— 1204 DI01 OUT PTR Pointer CANCEL | 00:00 | NEXT
	Select CONST with keys ▲ and ▼.	LOC ↻ PAR EDIT ——— 1204 DI01 OUT PTR Const CANCEL | 00:00 | NEXT

Step	Action	Display
6.	Press NEXT.	LOC ↻ PAR EDIT 1204 DI01 OUT PTR C.FALSE [0] CANCEL 00:00 SAVE
7.	Specify a new constant value (TRUE or FALSE) for the bit pointer parameter with keys ▲ and ▼.	LOC ↻ PAR EDIT 1204 DI01 OUT PTR C.TRUE [1] CANCEL 00:00 SAVE
8.	• To continue, press SAVE. • To cancel the new value and keep the original, press CANCEL. The new value is shown in the parameters list.	LOC ↻ PARAMETERS 1201 DI01 CONF9901 1202 DI02 CONF 1203 DI03 CONF 1204 DI01 OUT PTR C.TRUE EXIT 00:00 EDIT

Changed Parameters mode

In the Changed Parameters mode, you can:

- view a list of all parameters that are changed from the macro default values
- change these parameters
- start, stop, change the direction and switch between local and remote control.

Editing changed parameters

Step	Action	Display
1.	Go to the Main menu by pressing MENU if you are in the Output mode, otherwise by pressing EXIT repeatedly until you get to the Main menu.	LOC MAIN MENU 1 PARAMETERS ASSISTANTS CHANGED PAR EXIT 00:00 ENTER
2.	Go to the Changed Parameters mode by selecting CHANGED PAR on the menu with keys ▲ and ▼, and pressing ENTER. If there are no changed parameters in the history, corresponding text will be shown.	LOC MESSAGE No parameters 00:00
3.	If parameters are changed, a list of them is shown. Select the changed parameter on the list with keys ▲ and ▼. The value of the selected parameter is shown below it.	LOC CHANGED PAR 9903 Mot nom current 3.5 A 9904 Mot nom voltage 9905 Mot nom freq 9906 Mot nom speed EXIT 00:00 EDIT
4.	Press EDIT to modify the value.	LOC PAR EDIT 9903 Mot nom current 3.5 A CANCEL 00:00 SAVE
5.	Specify a new value for the parameter with keys ▲ and ▼. Pressing the key once increments or decrements the value. Holding the key down changes the value faster. Pressing the keys simultaneously replaces the displayed value with the default value.	LOC PAR EDIT 9903 Mot nom current 3.0 A CANCEL 00:00 SAVE
	To accept the new value, press SAVE. If the new value is the default value, the parameter is removed from the list of changed parameters. To cancel the new value and keep the original, press CANCEL.	LOC CHANGED PAR 9903 Mot nom current 3.0 A 9904 Mot nom voltage 9905 Mot nom freq 9906 Mot nom speed EXIT 00:00 EDIT

Fault Logger option

In the Fault Logger option, you can:

- view the drive fault history
- see the details of the most recent faults
- read the help text for the fault and make corrective actions
- start, stop, change the direction and switch between local and remote control.

Viewing faults

Step	Action	Display
1.	Go to the Main menu by pressing MENU if you are in the Output mode, otherwise by pressing EXIT repeatedly until you get to the Main menu.	LOC MAIN MENU 1 PARAMETERS ASSISTANTS CHANGED PAR EXIT 00:00 ENTER
2.	Go to the Fault Logger option by selecting FAULT LOGGER on the menu with keys ▲ and ▼, and pressing ENTER. If there are no faults in the fault history, corresponding text will be shown. If there is a fault history, the display shows the fault log starting with the most recent fault. The number on the row is the fault code according to which the causes and corrective actions are listed in appropriate firmware manual.	LOC MESSAGE No fault history found LOC FAULT LOGGER 1 36: LOCAL CTRL LOSS 29.04.08 10:45:58 EXIT 00:00 DETAIL
3.	To see the details of a fault, select it with keys ▲ and ▼, and press DETAIL. Scroll the text with keys ▲ and ▼. To return to the previous display, press EXIT.	LOC LOCAL CTRL LOSS TIME 10:45:58 FAULT CODE 36 FAULT CODE EXTENSION EXIT 00:00 DIAG

Step	Action	Display
4	If you want help in diagnosing the fault, press DIAG.	LOC Check parameter ‘30.0 3 Local ctrl loss’ se tting. Check PC tool or panel connection. EXIT OK

Resetting faults

Step	Action	Display
1.	When a fault occurs, a text identifying the fault is shown. • To reset the fault, press RESET. • To return to the previous display, press EXIT.	LOC FAULT FAULT 36 LOCAL CTRL LOSS RESET EXIT

Time & Date option

In the Time & Date option, you can:

- show or hide the clock
- change date and time display formats
- set the date and time
- enable or disable automatic clock transitions according to the daylight saving changes
- start, stop, change the direction and switch between local and remote control.

The control panel contains a battery to make sure the function of the clock when the panel is not powered by the drive.

Using the Time and Date option

Step	Action	Display
1.	Go to the Main menu by pressing MENU if you are in the Output mode, otherwise by pressing EXIT repeatedly until you get to the Main menu.	LOC MAIN MENU 3 PARAMETERS FAULT LOGGER TIME & DATE EXIT 00:00 ENTER
2.	Go to the Time & Date option by selecting TIME & DATE on the menu with keys ▲ and ▼, and pressing ENTER.	LOC TIME & DATE 1 CLOCK VISIBILITY TIME FORMAT DATE FORMAT SET TIME SET DATE EXIT 00:00 SEL
3.	• To show (hide) the clock, select CLOCK VISIBILITY on the menu, press SEL, select Show clock (Hide clock) with keys ▲ and ▼ and press SEL, or, if you want to return to the previous display without making changes, press EXIT. • To specify the time format, select TIME FORMAT on the menu, press SEL and select a suitable format with keys ▲ and ▼. Press SEL to save or CANCEL to cancel your changes.	LOC CLOCK VISIB 1 Show clock Hide clock EXIT 00:00 SEL LOC TIME FORMAT 1 24-hour 12-hour CANCEL 00:00 SEL

Step	Action	Display
	• To specify the date format, select DATE FORMAT on the menu, press SEL and select a suitable format. Press OK to save or CANCEL to cancel your changes. • To set the time, select SET TIME on the menu and press SEL. Specify the hours with keys ▲ and ▼, and press OK.Then specify the minutes. Press OK to save or CANCEL to cancel your changes.	LOC ↻ DATE FORMAT ——1 mm/dd/yy dd.mm.yyyy mm/dd/yyyy CANCEL 00:00 OK LOC ↻ SET TIME 15:41 CANCEL OK

	• To set the date, select SET DATE on the menu and press SEL. Specify the first part of the date (day or month depending on the selected date format) with keys ▲ and ▼, and press OK. Repeat for the second part. After specifying the year, press OK. To cancel your changes, press CANCEL.
	• To enable or disable the automatic clock transitions according to the daylight saving changes, select DAYLIGHT SAVING on the menu and press SEL.
	Pressing ? opens the help that shows the beginning and end dates of the period during which daylight saving time is used in each country or area whose daylight saving changes you can select to be followed. Scroll the text with keys ▲ and ▼. To return to the previous display, press EXIT.
	  • To disable automatic clock transitions according to the daylight saving changes, select Off and press SEL.
	  • To enable automatic clock transitions, select the country or area whose daylight saving changes are followed and press SEL.
	  • To return to the previous display without making changes, press EXIT.
		LOC ↻ SET DATE
		19.03.2008
		CANCEL 00:00 OK
		
		LOC ↻ DAYLIGHT S ——1
		off
		EU
		US
		Aust 1: NSW,Vict..
		Aust 2:Tasmania..
		EXIT 00:00 SEL
		
		LOC ↻ HELP
		EU:
		On: Mar last Sunday
		Off: Oct last Sunday
		
		US:
		EXIT 00:00

Parameter Backup option

The Parameter Backup option is used to export parameters from one drive to another or to make a backup of the drive parameters. Uploading to the panel stores all drive parameters, including up to four user sets, to the control panel. Selectable subsets of the backup file can then be restored/downloaded from the control panel to the same drive or another drive.

In the Parameter Backup option, you can:

- Copy all parameters from the drive to the control panel with MAKE BACKUP TO PANEL. This includes all defined user sets of parameters and internal (not adjustable by the user) parameters, such as those changed by the ID Run.
- View the information about the backup stored in the control panel with SHOW BACKUP INFO. This includes, for example, version information etc. of the current backup file in the panel. It is useful to check this information when you are going to restore the parameters to another drive with RESTORE PARS ALL to ensure that the drives are compatible.
- Restore the full parameter set from the control panel to the drive using the RESTORE PARS ALL command. This writes all parameters, including the internal non-user-adjustable motor parameters, to the drive. It does NOT include the user sets of parameters.

  Note: Use this function only to restore the parameters from a backup or to restore parameters to systems that are compatible.
- Restore all parameters, except motor data, to the drive with RESTORE PARS NO-IDRUN.
- Restore only motor data parameters to the drive with RESTORE PARS IDRUN.
- Restore all user sets to the drive with RESTORE ALL USER SETS.
- Restore only user set 1…4 to the drive with RESTORE USER SET 1…RESTORE USER SET 4.

Backup and restore parameters

For all backup and restore functions available, see page 111.

Step	Action	Display
1.	Go to the Main menu by pressing MENU if you are in the Output mode, otherwise by pressing EXIT repeatedly until you get to the Main menu.	LOC ↻ MAIN MENU 4 FAULT LOGGER TIME & PAR BACKUP EXIT 00:00 ENTER
2.	Go to the Parameter Backup option by selecting PAR BACKUP on the menu with keys ▲ and ▼, and pressing ENTER.	LOC ↻ PAR BACKUP 1 MAKE BACKUP TO PANEL SHOW BACKUP INFO RESTORE PARS ALL RESTORE PARS NO-IDRUN RESTORE PARS IDRUN EXIT 00:00 SEL
3.	To copy all parameters (including user sets and internal parameters) from the drive to the control panel, select MAKE BACKUP TO PANEL on the Par Backup with keys ▲ and ▼, and press SEL. Operation starts. Press ABORT if you want to stop the operation. After the backup is completed, the display shows a message about the completion. Press OK to return to the Par Backup.	LOC ↻ PAR BACKUP Copying file 1/2 00:00 LOC ↻ MESSAGE Parameter upload successful OK 00:00
4.	To perform restore functions, select the appropriate operation (here RESTORE PARS ALL is used as an example) on the Par Backup with keys ▲ and ▼. • Press SEL. Restoring starts.	LOC ↻ PAR BACKUP 3 MAKE BACKUP TO PANEL SHOW BACKUP INFO RESTORE PARS ALL RESTORE PARS NO-IDRUN RESTORE PARS IDRUN EXIT 00:00 SEL LOC ↻ PAR BACKUP Initializing param. restore operation 00:00

Step	Action	Display
	• Backup interface version is checked. Scroll the text with keys ▲ and ▼.	LOC ↻ VERSION CHECK - BACKUP INTERFACE VER 0.2 0.2 OK FIRMWARE VERSION CANCEL 00:00 CONT
	• If you want to continue, press CONT. Press CANCEL if you want to stop the operation. If the downloading is continued, the display shows a message about it.	LOC ↻ PAR BACKUP Initializing param. restore operation 00:00
	• Downloading continues, drive is restarted.	LOC ↻ PAR BACKUP Restarting drive 00:00
	• The display shows the transfer status as a percentage of completion.	LOC ↻ PAR BACKUP Restoring/downloading all parameters 50%
	• Downloading finishes.	LOC ↻ PAR BACKUP Finishing restore operation

Handling parameter errors during backup and restore function

If you try to backup and restore parameters between different firmware versions, the panel shows you the following parameter error information:

Step	Action	Display
1.	Restore operation starts normally.	LOC ↻ PAR BACKUP Initializing param. restore operation 00:00
2.	Firmware version is checked. You can see on the panel that the firmware versions are not the same. Scroll the text with keys ▲ and ▼. To continue, press CONT. Press CANCEL to stop the operation.	LOC ↻ VER CHECK 1 FIRMWARE VERSION UMFL, 1460, 0, UMFL, 1330, 0, OK PRODUCT VARIANT CANCEL 00:00 CONT
3.	If the downloading is continued, the display shows a message about it.	LOC ↻ PAR BACKUP Initializing param. restore operation 00:00
	• Downloading continues, drive is restarted.	LOC ↻ PAR BACKUP Restarting drive 00:00
	• The display shows the transfer status as a percentage of completion.	LOC ↻ PAR BACKUP Restoring/downloading all parameters 50%
	• Downloading continues.	LOC ↻ PAR BACKUP Restarting drive 00:00

Step	Action	Display
	• Downloading finishes.	LOC ↻ PAR BACKUP Finishing restore operation
4.	The panel shows a list of erroneous parameters. Scroll the parameters with keys ▲ and ▼. The reason for parameter error is also shown. • To edit parameters, press EDIT when EDIT command is visible. See section *Using the Parameters option* on page *97*. • To save the new value, press SAVE. • To return to the list of erroneous parameters, press CANCEL.	LOC ↻ PAR ERRORS 4 1313 AI SUPERVIS ACT 0000 bin INCORRECT VALUE TYPE READY 00:00 EDIT
5.	The parameter value you chose is visible under the parameter name. Press READY when you have edited parameters.	

Restoring a user set between different firmware versions

If you try to backup and restore a user set between different firmware versions, the panel shows you the following alarm information:

Step	Action	Display
1.	Restore operation starts normally.	LOC ↻ PAR BACKUP Initializing param. restore operation 00:00
2.	Version check is also OK. You can see on the panel that the firmware versions are not the same. You can scroll the text with keys ▲ and ▼.	LOC ↻ VER CHECK 1 FIRMWARE VERSION UMFL, 1460, 0, UMFL, 1330, 0, OK PRODUCT VARIANT CANCEL 00:00 CONT
3.	If the downloading is continued, the display shows a message about it.	LOC ↻ PAR BACKUP Initializing param. restore operation 00:00
	• Downloading continues, drive is restarted.	LOC ↻ PAR BACKUP Restarting drive 00:00
	• The display shows the transfer status as a percentage of completion.	LOC ↻ PAR BACKUP Restoring/downloading user set 1 50%
	• Downloading continues.	LOC ↻ PAR BACKUP Initializing param. restore operation 00:00

Step	Action	Display
	• Downloading continues, drive is restarted.	LOC ↻ PAR BACKUP Restarting drive 00:00
	• Downloading finishes.	LOC ↻ PAR BACKUP Finishing restore operation
4.	Panel shows a text identifying the alarm and returns to the Par Backup.	LOC ↻ ALARM ALARM 2036 RESTORE EXIT

Loading a user set between different firmware versions

If you try load a user set between different firmware versions, the panel shows you the following fault information:

Step	Action	Display
1.	Go to the Parameters option by selecting PARAMETERS on the main menu as shown in section Using the Parameters option on page *97*. A user set is loaded through parameter *16.07* USER SET SEL. Select parameter group 16 SYSTEM with keys ▲ and ▼.	LOC ↻ PAR GROUPS ——16 10 START/STOP 12 DIGITAL IO 13 ANALOGUE INPUTS 15 ANALOGUE OUTPUTS 16 SYSTEM EXIT | 00:00 | SEL
2.	Press SEL to select the parameter group 16. Select parameter *16.07* USER SET SEL with keys ▲ and ▼. The current value of each parameter is shown below its name.	LOC ↻ PARAMETERS —— 1604 PASS RESTORE 1605 PARAM SAVE 1606 PARAM CLEAR 1607 USER SET SEL No request EXIT | 00:00 | EDIT
3.	Press EDIT. Select the user set you want to load with keys ▲ and ▼. Press SAVE.	LOC ↻ PAR EDIT —— 1607 USER SET SEL No request [1] CANCEL | 00:00 | SAVE LOC ↻ PAR EDIT —— 1607 USER SET SEL Load set 1 [2] CANCEL | 00:00 | SAVE
4.	Panel shows a text identifying the fault.	LOC ↻ FAULT —— FAULT 310 USERSET LOAD RESET | | EXIT

Viewing backup information

Step	Action	Display
1.	Go to the Main menu by pressing MENU if you are in the Output mode, otherwise by pressing EXIT repeatedly until you get to the Main menu.	LOC ↻ MAIN MENU ———4 FAULT LOGGER TIME & DATE PAR BACKUP EXIT | 00:00 | ENTER
2.	Go to the Par Backup option by selecting PAR BACKUP on the menu with keys ▲ and ▼, and pressing ENTER.	LOC ↻ PAR BACKUP ———2 MAKE BACKUP TO PANEL SHOW BACKUP INFO RESTORE PARS ALL RESTORE PARS NO-IDRUN RESTORE PARS IDRUN EXIT | 00:00 | SEL
3.	Select SHOW BACKUP INFO on the Par Backup with keys ▲ and ▼, and press SEL. The display shows the following information about the drive from where the backup was made: BACKUP INTERFACE VER: Format version of the backup file FIRMWARE VERSION: Information on the firmware UMFL: Firmware of the ACL30 drive 1330: Firmware version (eg, 1.330) 0: Firmware patch version You can scroll the information with keys ▲ and ▼.	LOC ↻ BACKUP INFO ——— BACKUP INTERFACE VER 0.2 0.2 FIRMWARE VERSION UMFL, 1330, 0, EXIT | 00:00 | LOC ↻ BACKUP INFO ——— FIRMWARE VERSION UMFL, 1330, 0, UMFL, 1330, 0, EXIT | 00:00 |
4.	Press EXIT to return to the Par Backup.	LOC ↻ PAR BACKUP ———1 MAKE BACKUP TO PANEL SHOW BACKUP INFO RESTORE PARS ALL RESTORE PARS NO-IDRUN RESTORE PARS IDRUN EXIT | 00:00 | SEL

I/O Settings

In the I/O Settings mode, you can:

- check the parameter settings related to any I/O terminal
- edit the parameter setting
- start, stop, change the direction and switch between local and remote control.

Editing parameter settings of I/O terminals

Step	Action	Display
1.	Go to the Main menu by pressing MENU if you are in the Output mode, otherwise by pressing EXIT repeatedly until you get to the Main menu.	LOC MAIN MENU 1 PARAMETERS ASSISTANTS CHANGED PAR EXIT 00:00 ENTER
2.	Go the I/O Settings mode by selecting I/O SETTINGS on the menu with keys ▲ and ▼, and pressing ENTER.	LOC I/O SETTINGS 1 Analog outputs Analog inputs Digital I/Os Digital inputs Relay outputs EXIT 00:00 SEL
	Select the I/O group, e.g. Digital inputs, with keys ▲ and ▼.	LOC I/O SETTINGS 4 Analog inputs Digital I/Os Digital inputs Relay outputs EXIT 00:00 SEL
3.	Press SEL. After a brief pause, the display shows the current settings for the selection. You can scroll digital inputs and parameters with keys ▲ and ▼.	LOC I/O SETTINGS 1 DI1 1002 UP COMMAND DI2 DI3 EXIT 00:00 INFO
4.	Press INFO. The panel shows information related to I/O selected (in this case, DI1). You can scroll information with keys ▲ and ▼. Press EXIT to return to the digital inputs.	LOC I/O INFO NUM OF I/O ITEMS 0 SLOT NUMBER 0 NODE NUMBER EXIT 00:00

Step	Action	Display
5.	Select the setting (line with a parameter number) with keys ▲ and ▼. You can edit the parameter (INFO selection turns into EDIT selection).	LOC ↻ I/O SETTINGS —1 DI1 1002 UP COMMAND DI2 DI3 EXIT 00:00 EDIT
6	Press EDIT.	LOC ↻ PAR EDIT 1002 UP COMMAND DI1 [P.02.01.00] CANCEL 00:00 SEL
7	Specify a new value for the setting with keys ▲ and ▼. Pressing the key once increments or decrements the value. Holding the key down changes the value faster. Pressing the keys simultaneously replaces the displayed value with the default value.	LOC ↻ PAR EDIT 1002 UP COMMAND DI04 [P.02.03.03] CANCEL 00:00 SEL
8	To save the new value, press SEL. To cancel the new value and keep the original, press CANCEL.	LOC ↻ I/O SETTINGS —1 DI1 1002 UP COMMAND DI2 DI3 EXIT 00:00 EDIT

Reference Edit option

In the Reference Edit option, you can:

- accurately control the local reference value,
- start, stop, change the direction and switch between local and remote control.

Editing is allowed only in the LOC state; the option always edits the local reference value.

Editing a reference value

Step	Action	Display
1.	If the panel is in the remote control mode (REM shown on the status line), switch to local control (LOC shown on the status line) by pressing LOC/REM. Reference editing is not possible in the remote control mode. If you try to enter REF EDIT in the remote control mode, the display shows a message about that.	REM MESSAGE Reference editing enabled only in local control mode 00:00
2.	Otherwise, go to the Main menu by pressing MENU if you are in the Output mode, otherwise by pressing EXIT repeatedly until you get to the Main menu.	LOC MAIN MENU 1 PARAMETERS ASSISTANTS CHANGED PAR EXIT 00:00 ENTER
3.	Go to the Reference Edit option by selecting REF EDIT on the menu with keys ▲ and ▼, and pressing ENTER.	LOC REF EDIT +0000.00 rpm CANCEL 00:00 NEXT
4.	Select the correct sign with keys ▲ and ▼, and press NEXT. Select the correct numbers with keys ▲ and ▼, and after each number is selected, press NEXT. If you do not select a number for a couple of seconds, the number you are editing moves on to the next one on the right.	LOC REF EDIT -1250.00 rpm CANCEL 00:00 SAVE

Step	Action	Display
5.	After the last number is selected, press SAVE. Go to the Output mode by pressing EXIT. The selected reference value is shown in the status line.	LOC ↻ -1250.00rpm 49.10 Hz 0.50 A 10.7 % DIR 00:00 MENU

Drive Info option

In the Drive Info option, you can:

- view information on the drive,
- start, stop, change the direction and switch between local and remote control.

Viewing drive info

Step	Action	Display
1.	Go to the Main menu by pressing MENU if you are in the Output mode, otherwise by pressing EXIT repeatedly until you get to the Main menu.	LOC MAIN MENU 1 PARAMETERS ASSISTANTS CHANGED PAR EXIT 00:00 ENTER
2.	Go to the Drive info option by selecting DRIVE INFO on the menu with keys ▲ and ▼, and pressing ENTER.	LOC DRIVE INFO DRIVE NAME - DRIVE TYPE ACL30 DRIVE MODEL EXIT 00:00

Step	Action	Display
3.	The display shows information about the drive. You can scroll the information with keys ▲ and ▼. **Note:** The information shown may vary according to the firmware version of the drive. DRIVE NAME: Drive name defined as a text in DriveStudio commissioning and maintenance tool DRIVE TYPE: ACL30 DRIVE MODEL: Type code of the drive FW VERSION: See page *119*. SOLUTION PROGRAM: Version information of the active solution program BASE SOLUTION PROGRAM: Version information of the solution program template STANDARD LIBRARY: Version information of the standard library TECHNOLOGY LIBRARY: Version information of the technology library POWER UNIT SERNO: Serial number of the power stage (JPU) MEM UNIT HW SERNO: Serial number in manufacturing the memory unit (JMU) MEM UNIT CONFIG SERNO: Serial number in configuring the memory unit (JMU). Press EXIT to return to the Main menu.	LOC ↻ DRIVE INFO FW VERSION UMFL, 1330, 0, SOLUTION PROGRAM - BASE SOLUTION PROGRAM EXIT 00:00

10

Program features

Contents of this chapter

This chapter describes some of the important features of the ACL30 elevator drive, how to use the drive and how to program it to operate. For each feature, there is a list of related user settings, actual signals, and fault and alarm messages.

Elevator system configuration

The figure below shows an example of a elevator system configuration with I/O control, one motor contactor and 1-phase 230 V AC UPS rescue operation. Safe torque off (STO) is used for removing the second motor contactor.

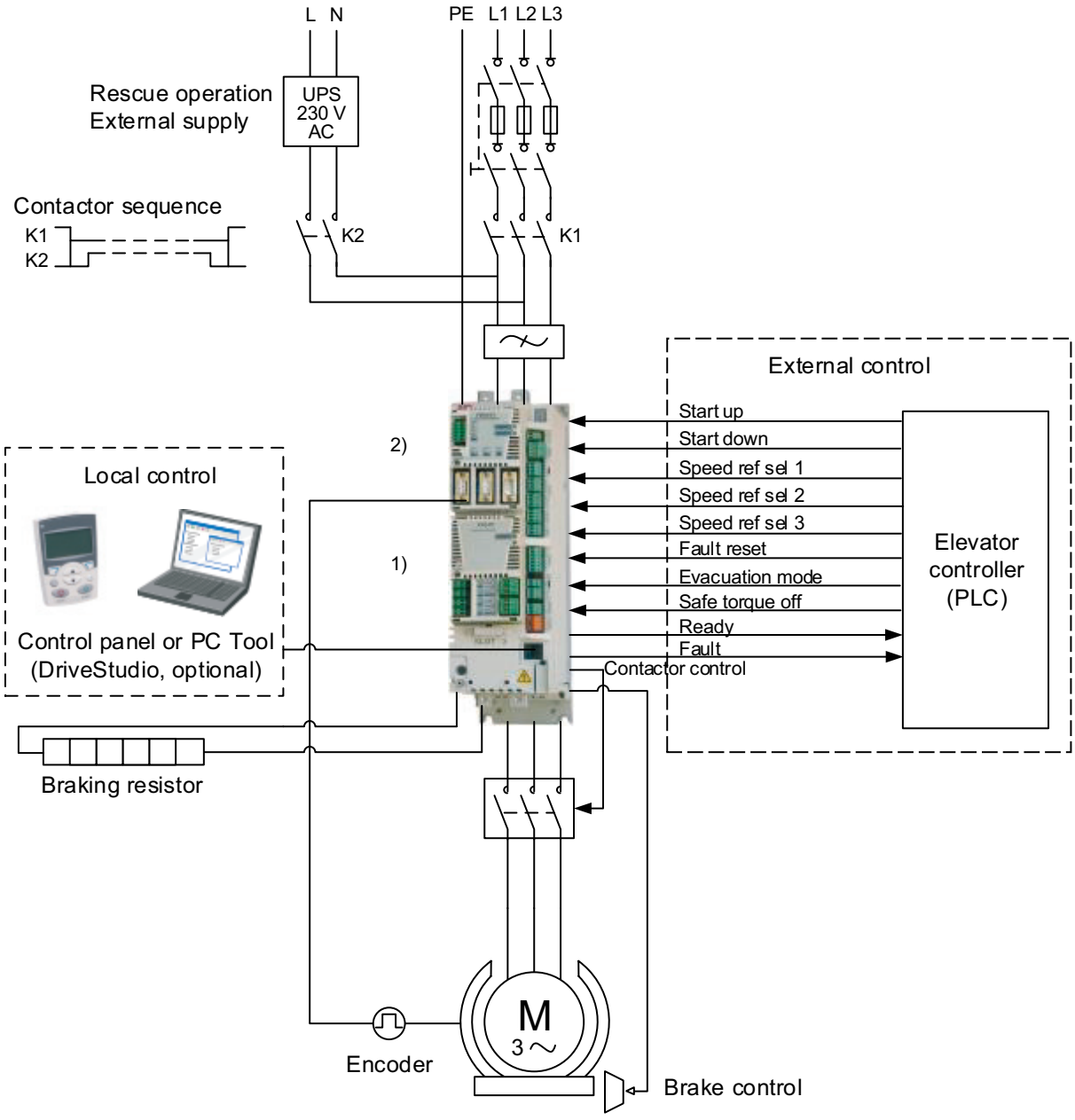

1) Extra inputs/outputs can be added by installing optional I/O extension modules (FIO-xx) in drive Slot 2.
2) Incremental or absolute encoder, or resolver interface module (FEN-xx) installed in drive Slot 1 or 2.

Local control vs. external control

The drive has two main control locations: external and local. You can use the control locations to control the drive, read status data, and adjust parameters.

The control location is selected with the LOC/REM key on the control panel or with the PC tool (Take/Release button).

Local control

When the drive is in local control, the control commands are given from the control panel keypad or from a PC equipped with the DriveStudio PC tool.

Local control is mainly used during commissioning and maintenance. The control panel always overrides the external control signal sources when used in local control. Changing the control location to local can be disabled with parameter *16.01* LOCAL LOCK.

External control

When the drive is in external control, control commands (start/stop and reference) are given through the I/O terminals (digital inputs), optional I/O extension modules (digital inputs), or the fieldbus interface (through an optional fieldbus adapter module). For information on the use of the fieldbus interface, contact your local ABB representative.

External control is used for control signals (eg, start up/down and stop). The speed reference is selected based on the combined status of the four configurable bit pointer parameters *80.06* SPEED REF SEL1, *80.07* SPEED REF SEL2, *80.08* SPEED REF SEL3 and *80.09* SPEED REF SEL4.

Safe torque off

The ACL30 has an integrated Safe torque off (STO) function. The function disables the control voltage of the power semiconductors of the drive output stage, thus preventing the inverter from generating the voltage required to rotate the motor. By using the Safe torque off function, both contactors interrupting the current to the motor in the elevator machine may be left out.

For more information, see *Safe torque off function for ACL30 drive application guide* (3AXD50000045959 [English]*)*.

Drive programming

The functionality of the drive can be extended and modified for various needs of the user. This can be done by using a drive programming feature with the optional DriveSPC PC tool. You can create a tailor-made application program with the standard IEC 61131 function blocks and thereby adapt the drive to the elevator system without additional hardware or software. For more information, contact your local ABB representative.

Backup and restore of drive contents

The drive offers a possibility of backing up numerous settings and configurations to external storage such as the internal memory of the drive control panel and a PC file (using the DriveStudio tool). These settings and configurations can then be restored to the drive, or a number of drives.

Backup using the control panel includes

- Parameter settings
- User parameter sets.

Backup using DriveStudio includes

- Parameter settings
- User parameter sets (four)
- DriveSPC lift control program.

For detailed instructions for performing the backup/restore, see chapter *Using the control panel* or the DriveStudio documentation.

Limitations

A backup can be done without interfering the drive operation. But restoring a backup always resets and reboots the control unit, so restore is not possible with the drive running.

Restoring backup files from one firmware version to another is considered risky, so the results should be carefully observed and verified when done for the first time.

The parameters and application support are bound to change between firmware versions and backups are not always compatible with other firmware versions even if restore is allowed by the backup/restore tool. Before using the backup/restore functions between different firmware versions, refer to the release notes of each version.

Parameter restore

Parameters are divided into three different groups that can be restored together or individually:

- Motor configuration parameters and identification (ID) run results
- Encoder and fieldbus adapter settings
- Other parameters.

For example, retaining the existing ID run results in the drive makes a new ID run unnecessary.

Restoring individual parameters can fail for the following reasons:

- The restored value does not fall within the minimum and maximum limits of the drive parameter
- The type of the restored parameter is different from that in the drive
- The restored parameter does not exist in the drive (often the case when restoring the parameters of a new firmware version to a drive with an older version)
- The backup does not contain a value for the drive parameter (often the case when restoring the parameters of an old firmware version to a drive with a newer version).

In these cases, the parameter is not restored. The backup/restore tool warns the user and offers a possibility to set the parameter manually.

User parameter sets

The drive has 50 user parameter sets that can be saved to the permanent memory and recalled using drive parameters. It is also possible to use digital inputs to switch between different user parameter sets. See the descriptions of parameters *16.07*…*16.10*.

A user parameter set contains all values of parameter groups 10 to 99 (except the fieldbus communication configuration settings).

As the motor settings are included in the user parameter sets, make sure the settings correspond to the motor used in the application before recalling a user set.

Basic start/stop operation

The basic start/stop functions can be used for the elevator start/stop control and the interlocks related to basic operation.

Start/stop control

Start/stop control comprises the logic and commands for starting the elevator in upward and downward directions. Starting method can be selected with parameter *10.01* START FUNC. There are two basic methods:

- *IN1 F IN2R* – this selection defines separate start signals for upward and downward directions. The source selected with *10.02* UP COMMAND is the start up (upward) signal and the source selected with *10.03* DOWN COMMAND is the start down (downward) signal.
- *IN1S IN2DIR* – this selection defines one signal for start and another signal for the direction of the elevator. The source selected with *10.02* UP COMMAND is the start signal and the source selected with *10.03* DOWN COMMAND is the direction (0 = up, 1 = down).

Start/stop control operates in the normal travel mode, releveling mode and evacuation mode. The inspection mode has a start/stop control of its own. For more information, see section *Inspection mode* on page *135*.

Settings

Parameters	Additional information
10.01 START FUNC	Selects the source for the start and stop control in external control.
10.02 UP COMMAND	Selects the source 1 for the start and stop commands in external control.
10.03 DOWN COMMAND	Selects the source 2 for the start and stop commands in external control.

Start/stop interlocking

The start/stop interlocking function stops or blocks the start command using parameter *10.80* LIFT RUN ENABLE without generating any fault or warning in the drive. When the signal configured with parameter *10.80* is switched Off, the drive will not start, or if the drive is running, it will stop.

Settings

Parameters	Additional information
10.80 LIFT RUN ENABLE	Selects the source for the Run enable signal.

Drive faults

Drive faults are considered as critical and non-critical faults. See chapter *Fault tracing* on page *289*.

- critical faults trip the drive immediately, drive stops modulation and closes the brake.
- non-critical faults allow the drive to continue modulation until start command is removed, that is the elevator continues travel to the destination floor and drive trips when it is stopped.

Automatic fault reset

The Automatic fault reset function resets pre-defined drive faults to ensure the operation of the drive in temporary fault situations.

When any one of the selected faults occur, a trial time defined with parameter *46.82* AUTORST TRL TIME starts and a fault reset is generated. You can define the number of resets to be generated within the trial time with parameter *46.81* AUTORESET TRIALS. With parameter *46.83* AUTORESET DELAY, you can also define for how long the drive waits after a fault before attempting a fault reset.

Settings

Parameters	Additional information
46.81 AUTORESET TRIALS	Defines the number of the automatic fault resets the drive performs within the time defined with parameter *46.82*.
46.82 AUTORST TRL TIME	Defines the time within which automatic fault resets are performed after the drive has tripped on a fault.
46.83 AUTORESET DELAY	Defines for how long the drive will wait after a fault before attempting an automatic fault reset.
46.84 AUTORESET SEL	Selects the faults to be automatically reset.

Diagnostics

Signals	Additional information
Actual signals	
05.02 LIFT FW	Elevator fault status word with fault bits.

Manual fault reset

In addition to automatic fault reset, faults can also be reset from an external source selected with parameter *46.80* FAULT RESET.

Settings

Parameters	Additional information
46.80 FAULT RESET	Selects the source for the fault reset signal.

Elevator operation modes

By default, the elevator operates in the normal travel mode. In addition, there are three other operation modes: releveling mode, evacuation mode and inspection mode. For an overview of the speed references available in each mode, see section *Speed reference selection and scaling* on page *137*.

Releveling mode

If the elevator overshoots the floor, the releveling mode can be activated to bring it back to the floor level. Parameter *80.12* RELVL SPEED SEL selects the source of the releveling speed reference: *80.13* RELEVELING SPEED, *02.05* AI1 SCALED or *02.07* AI2 SCALED. The figure below illustrates releveling:

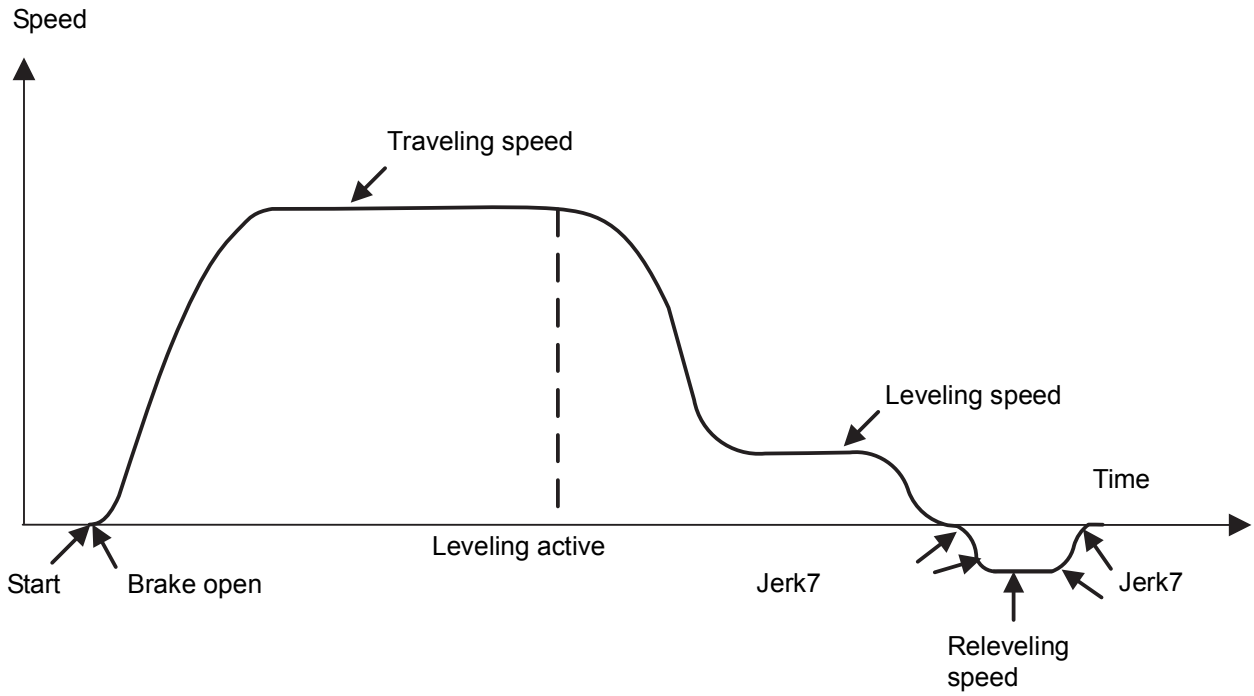

Settings

Parameters	Additional information
25.90 RELVL ACC/DEC	Defines the acceleration/deceleration used in the releveling mode.
80.12 RELVL SPEED SEL	Selects the source of the releveling speed reference.
80.13 RELEVELING SPEED	Defines the speed reference to be used during releveling when selected as the source of parameter *80.12*.

Diagnostics

Signals	Additional information
Actual signals	
05.01 LIFT SW bit 7 (RELEVELING ACT)	Displays whether the releveling speed is the current speed reference used by the elevator.

Evacuation mode

The Evacuation mode is used in the elevator car rescue operation in case power supply fails. For a detailed description of the operation of this mode and rescue operation in general, see section *Rescue operation* on page *173*.

Inspection mode

The Inspection mode is used for maintenance operations. You can enable it with parameter *10.84* INSPECTION MODE. In this mode, the elevator can be operated with parameters *10.85* INSPECTION UP and *10.86* INSPECTION DOWN, as shown in the table below. The standard start up/down commands (see section *Start/stop control* on page *132*) are disabled.

Par. *10.85*	**Par. *10.86***	**Command**
0	0	Stop
1	0	Inspection mode up
0	1	Inspection mode down
1	1	Stop

When the elevator operates in the Inspection mode, the drive uses parameter *80.15* INSPECTION SPEED as the speed reference and parameters *25.86* INSPECT MODE ACC and *25.87* INSPECT MODE DEC for acceleration and deceleration, respectively.

Besides the Inspection mode, it is also possible to conduct maintenance operations while the elevator is running at the inspection speed in the normal travel mode. In this case, the inspection speed is selected based on the combined status of parameters *80.06* SPEED REF SEL1, *80.07* SPEED REF SEL2, *80.08* SPEED REF SEL3 and *80.09* SPEED REF SEL4, and the elevator travel is started with the standard start up/down commands. The Inspection mode as well as the Inspection mode up/down commands are disabled.

Settings

Parameters	**Additional information**
10.84 INSPECTION MODE	Selects the source for enabling/disabling the inspection mode.
10.85 INSPECTION UP	Selects the source for starting the elevator in the upward direction in the inspection mode.
10.86 INSPECTION DN	Defines the source for starting the elevator in the downward direction in the inspection mode.
25.86 INSPECT MODE ACC	Defines the acceleration used in the inspection mode.
25.87 INSPECT MODE DEC	Defines the deceleration used in the inspection mode.
80.15 INSPECTION SPEED	Defines the speed reference used in the inspection mode. Can also be used in the normal travel mode if the inspection mode is not in use.

Diagnostics

Signals	Additional information
Actual signals	
05.01 LIFT SW bit 10 (INSPECT SPD ACT)	Displays whether the inspection speed is the current speed reference used by the elevator.

Speed reference selection and scaling

Speed reference selection

Speed reference selection function sets the selection mode and priority of the speed reference inputs. The selection mode can be set with parameter *80.05* SPEED REF MODE.

MULTIPLE – This mode can be used for multiple speed references. Up to eight separate preset speed references can be programmed to the drive using parameters in group *80 SPEED REFERENCE* and can be selected using binary coded digital inputs.

SEP HIGH PRI – This mode can be used when high speed reference has priority. Up to seven different speeds can be programmed to the drive and can be selected using dedicated digital inputs. Each speed reference takes priority over the leveling speed.

SEP LEVL PRI – This mode can be used when leveling speed reference has priority. Up to seven different speeds can be programmed to the drive and can be selected using dedicated digital inputs. The leveling speed reference, takes priority over all other speed references when enabled through one of the digital input terminals.

The function calculates the final speed reference to be used by the elevator in the different elevator operation modes, depending on the settings in parameters *80.05* SPEED REF MODE, *80.06* SPEED REF SEL1, *80.07* SPEED REF SEL2, *80.08* SPEED REF SEL3, and *80.09* SPEED REF SEL4.

Speed references available	**Elevator operation mode**
Speed 1*, 2, or 3	Normal travel mode
Nominal speed	Normal travel mode
Medium speed	Normal travel mode
Leveling speed	Normal travel mode, when the leveling command is active
Releveling speed	Reveling mode
Inspection speed	Inspection mode or normal travel mode, depending on which mode is active
Evacuation speed	Evacuation mode

* The speed1 reference is fixed to a constant value 0 m/s. It can be used for stopping the elevator.

The function selects the speed reference based on the elevator operation mode as follows.

- If neither the evacuation mode nor the inspection mode is active, the speed reference is selected based on the combined status of parameters *80.05* SPEED REF MODE, *80.06* SPEED REF SEL1, *80.07* SPEED REF SEL2, *80.08* SPEED REF SEL3, and *80.09* SPEED REF SEL4.
- If either the evacuation mode or the inspection mode is active, the speed reference is selected with parameter *80.16* EVACUATION SPEED or *80.15* INSPECTION SPEED, depending on which of the modes is active.
- If both the evacuation mode and the inspection mode are active, the evacuation mode has higher priority.

Speed reference mode set to MULTIPLE

The table below further illustrates speed reference selection when *80.05* SPEED REF MODE is set to MULTIPLE.

10.81 EVACUATION MODE	*10.84* INSPECTION MODE	*80.06* SPEED REF SEL1	*80.07* SPEED REF SEL2	*80.08* SPEED REF SEL3	*05.03* LIFT SPEED SEL
0	0	0	0	0	Speed1 (zero speed)
0	0	1	0	0	Nominal speed
0	0	0	1	0	Medium speed
0	0	1	1	0	Leveling speed
0	0	0	0	1	Releveling speed
0	0	1	0	1	Inspection speed
0	0	0	1	1	Speed2
0	0	1	1	1	Speed3
0	1	x	x	x	Inspection speed
1	x	x	x	x	Evacuation speed

Speed reference mode set to SEP HIGH PRI or SEP LEVEL PRI

- The table below illustrates speed reference selection when *80.05* SPEED REF MODE is set to SEP HIGH PRI or SEP LEVL PRI and all four SPEED REF SEL parameters *80.06*...*80.09* are configured.

80.06 SPEED REF SEL1	*80.07* SPEED REF SEL2	*80.08* SPEED REF SEL3	*80.09* SPEED REF SEL4	Selected speed
1	0	0	X	Nominal speed
0	1	0	X	Medium speed
1	1	1	X	Speed 2
0	1	1	X	Speed 3
0	0	1	X	Releveling speed
Y	Y	Y	1	Leveling speed
0	0	0	0	Speed 1

X = 0 in SEP LEVL PRI mode and 0/1 (any value) in SEP HIGH PRI mode

Y = 0/1 (any value) in SEP LEVL PRI mode and 0 in SEP HIGH PRI mode

- The table below illustrates speed reference selection in the following two conditions:
  - when parameter *80.05* SPEED REF MODE is set to SEP LEVL PRI, with *80.06* SPEED REF SEL1 = NOT USED or
  - when parameter *80.05* SPEED REF MODE is set to SEP HIGH PRI, with *80.09* SPEED REF SEL4 = NOT USED

80.05 SPEED REF MODE - SEP LEVL PRI 80.06 SPEED REF SEL1 - NOT USED			80.05 SPEED REF MODE - SEP HIGH PRI 80.09 SPEED REF SEL4 - NOT USED			Selected speed
SPEED REF SEL2	SPEED REF SEL3	SPEED REF SEL4	SPEED REF SEL1	SPEED REF SEL2	SPEED REF SEL3	
0	0	0	1	0	0	Nominal speed
1	0	0	0	1	0	Medium speed
N/A	N/A	N/A	1	1	1	Speed 2
1	1	0	0	1	1	Speed 3
0	1	0	0	0	1	Releveling speed
0/1	0/1	1	0	0	0	Leveling speed
N/A	N/A	N/A	N/A	N/A	N/A	Speed 1

CAUTION! Broken wires or wiring mistake may lead to unexpected lift speed selection.
When parameter *80.05* SPEED REF MODE is set to SEP LEVL PRI mode and *80.06* SPEED REF SEL1 is set to NOT USED, it is recommended to check the wiring.

Off-delays

Based on the set of off-delay parameters, the nominal, medium, speed2 and speed3 references, that is, the traveling speeds can be used for a prolonged period, despite change in the status of the speed reference selection bits. The off-delay parameter set contains adjustable speed limit and delay periods for each traveling speed reference. The off-delays are used only when the elevator speed is below the set speed limit.

The figure below illustrates the normal running sequence of a elevator traveling from one floor to another and the use of off-delay for the nominal speed:

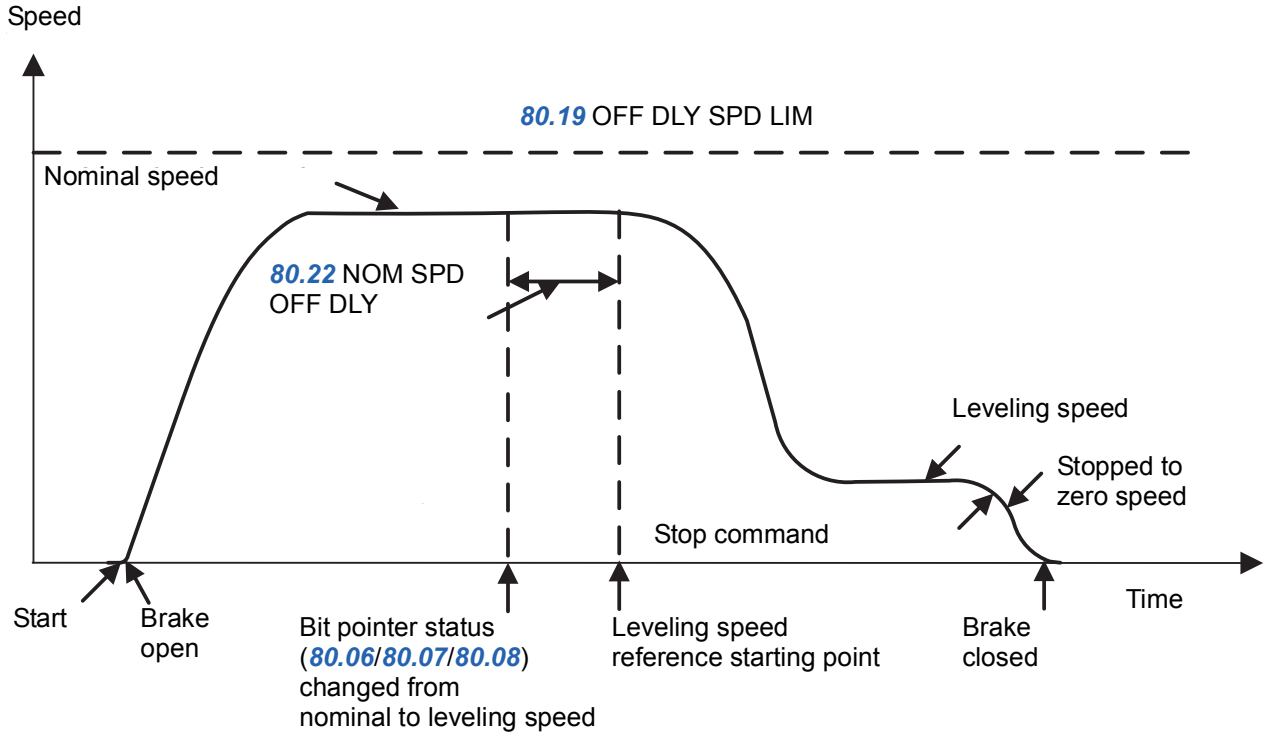

Settings

Parameters	Additional information
80.01 NOMINAL SPEED	Defines the nominal speed reference used in the normal travel mode.
80.06 SPEED REF SEL1	Selects the source for speed reference selection bit 1.
80.07 SPEED REF SEL2	Selects the source for speed reference selection bit 2.
80.08 SPEED REF SEL3	Selects the source for speed reference selection bit 3.
80.10 SPEED1	A factory-set zero speed reference, which can be used for stopping the elevator in the normal travel mode.
80.11 LEVELING SPEED	Defines the speed reference to be used during leveling.
80.12 RELVL SPEED SEL	Selects the source of the releveling speed reference.
80.13 RELEVELING SPEED	Defines the speed reference to be used during releveling when selected as the source of parameter *80.12*.
80.14 MEDIUM SPEED	Defines an additional speed reference which can be used instead of the nominal speed based on the floor distance.
80.15 INSPECTION SPEED	Defines the speed reference used in the inspection mode. Can also be used in the normal travel mode if the inspection mode is not in use.

Parameters	Additional information
80.16 EVACUATION SPEED	Defines the speed reference used in the evacuation mode.
80.17 SPEED2	Defines an additional speed reference which can be used instead of the nominal speed based on the floor distance.
80.18 SPEED3	Defines an additional speed reference which can be used instead of the nominal speed based on the floor distance.
80.19 OFF DLY SPD LIM	Defines the elevator speed limit for activating the extended off-delay time periods defined with parameters ***80.20***…***80.23***.
80.20 SPEED2 OFF DLY	Defines the off-delay time for the speed2.
80.21 MED SPD OFF DLY	Defines the off-delay time for the medium speed.
80.22 NOM SPD OFF DLY	Defines the off-delay time for the nominal speed.
80.23 SPEED3 OFF DLY	Defines the off-delay time for the speed3.

Diagnostics

Signals	Additional information
Actual signals	
05.01 LIFT SW bit 5 (SPEED1 ACT)	Displays whether the speed1 is the current speed reference used by the elevator.
05.01 LIFT SW bit 6 (LEVELING ACT)	Displays whether the leveling speed is the current speed reference used by the elevator.
05.01 LIFT SW bit 7 (RELEVELING ACT)	Displays whether the releveling speed is the current speed reference used by the elevator.
05.01 LIFT SW bit 8 (MEDIUM SPD ACT)	Displays whether the medium speed is the current speed reference used by the elevator.
05.01 LIFT SW bit 9 (NOMINAL SPD ACT)	Displays whether the nominal speed is the current speed reference used by the elevator.
05.01 LIFT SW bit 10 (INSPECTION SPD ACT)	Displays whether the inspection speed is the current speed reference used by the elevator.
05.01 LIFT SW bit 12 (EVAC SPD ACT)	Displays whether the evacuation speed is the current speed reference used by the elevator.
05.01 LIFT SW bit 13 (SPEED2 ACT)	Displays whether the speed2 is the current speed reference used by the elevator.
05.01 LIFT SW bit 14 (SPEED3 ACT)	Displays whether the speed3 is the current speed reference used by the elevator.
05.03 LIFT SPEED SEL	Displays the elevator speed used based on the Speed reference selection function.
05.04 LIFT SPEED ACT	Displays the actual elevator speed in m/s.

Speed reference scaling

The Speed reference scaling function converts the linear speed of the elevator (m/s) to the rotation speed of the elevator motor (rpm). To ensure correct operation of the function and the elevator, you must define calculation factors at the start-up of the drive. These factors (parameters) are: gear ratio, sheave diameter and roping ratio.

The figure below illustrates the components of the function.

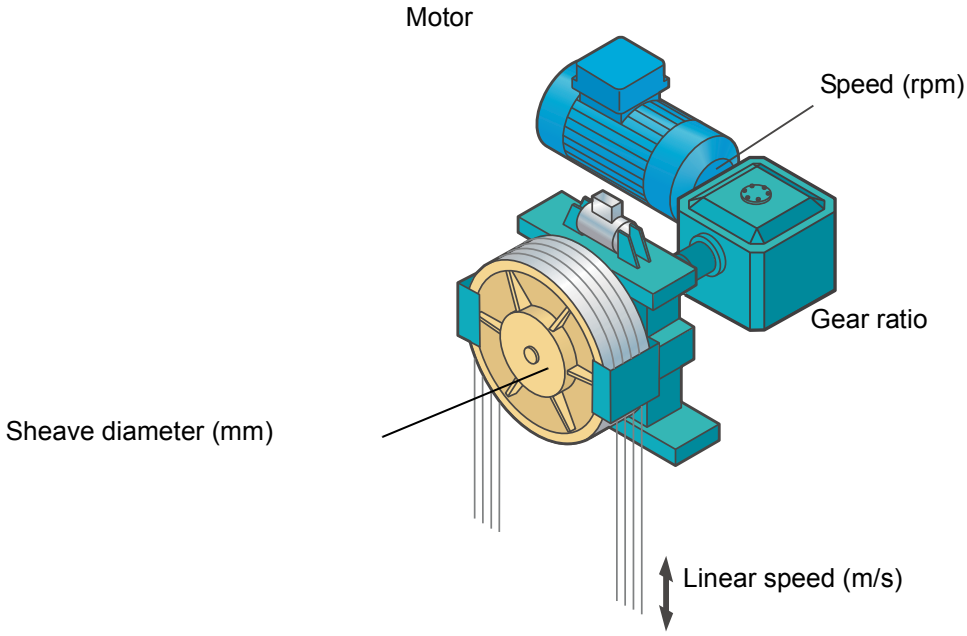

The figure below illustrates common roping ratio alternatives.

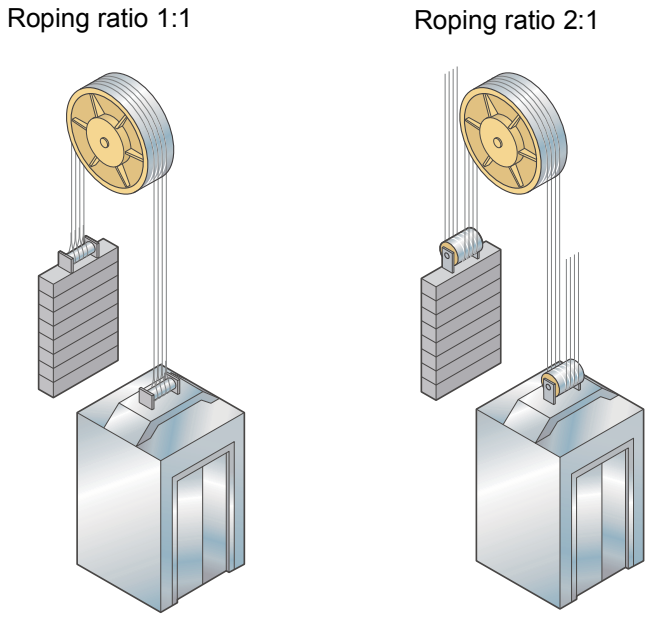

The function calculates the speed reference in rpm using the following equation.

$$\text{Speed ref (rpm)} = \text{Speed ref (m/s)} \cdot \frac{\textit{80.02}\ \text{GEAR RATIO} \cdot \textit{80.04}\ \text{ROPING RATIO} \cdot 60}{(\text{Pi} \cdot \textit{80.03}\ \text{SHEAVE DIAMETER (mm)})/1000}$$

The result of the calculation, motor rotational speed (rpm) corresponds to the elevator nominal speed (m/s) and is shown as the value of parameter *22.05* SPEED SCALING.

Settings

Parameters	Additional information
22.05 SPEED SCALING	Shows the motor rotational speed (rpm), which corresponds to the elevator nominal speed (m/s) defined with parameter *80.01* NOMINAL SPEED.
80.02 GEAR RATIO	Defines the gear box ratio.
80.03 SHEAVE DIAMETER	Defines the sheave diameter in millimeters.
80.04 ROPING RATIO	Defines the roping ratio.

Speed profile

The Speed profile functions automatically select a set of acceleration, deceleration and jerks into use based on the elevator operation mode.

Acceleration/deceleration selection

The Acceleration/deceleration function selects the acceleration and deceleration used based on the elevator operation mode as follows:

- When the evacuation mode is active, parameters *25.88* EVAC MODE ACC and *25.89* EVAC MODE DEC are used for acceleration and deceleration, respectively.
- When the inspection mode is active, parameters *25.86* INSPECT MODE ACC and *25.87* INSPECT MODE DEC are used for acceleration and deceleration, respectively.
- When the releveling mode is active, parameter *25.90* RELVL ACC/DEC is used for acceleration and deceleration.
- During the normal travel mode, either parameters *25.82* ACC1 / *25.83* DEC1 or *25.84* ACC2 / *25.85* DEC2 are used for acceleration and deceleration, depending on the selection made with parameter *25.80* ACC/DEC SEL.

Acceleration/deceleration sets 1 and 2 are used during the normal travel mode as shown below:

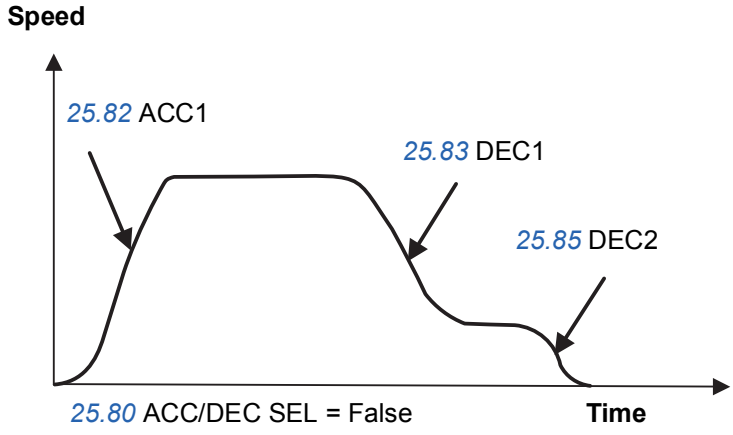

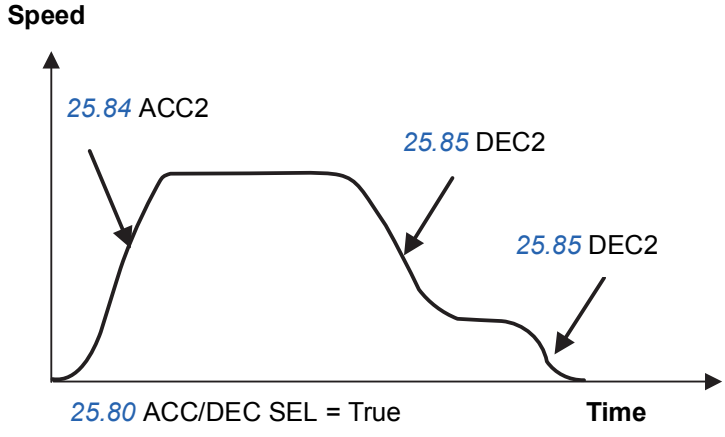

Jerk selection

The Jerk selection function selects an appropriate jerk into use based on the elevator operation mode. The function allows you to:

- define different jerk values for the different elevator operation modes
- enable or disable the use of jerks. When parameter *25.91* JERK DISABLE is activated, the jerks are internally set to a zero value.

You can obtain the acceleration transition time during a jerk by dividing the selected acceleration by the jerk value.

The figure below illustrates how the drive uses the jerks.

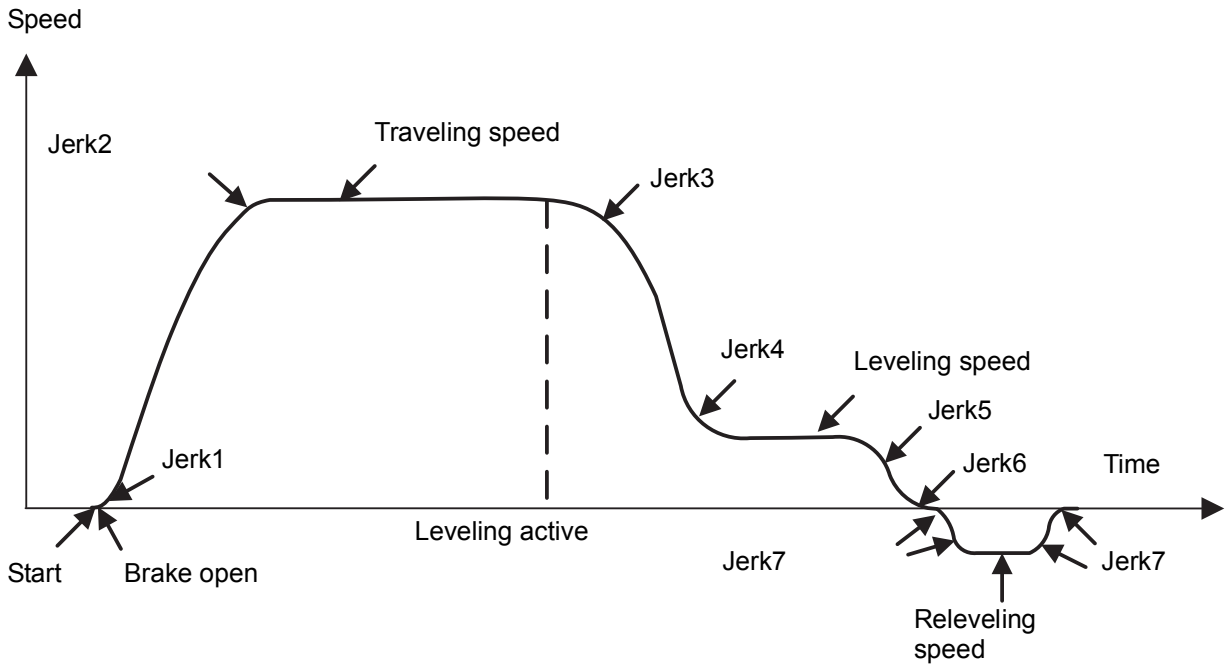

Settings

Parameters	Additional information
25.80 ACC/DEC SEL	Selects the source for the acceleration/deceleration set 1 or acceleration/deceleration set 2 used in the normal travel mode.
25.81 ACC/DEC CHNG SPD	Selects the speed limit in % to change between acc/dec set 1 and 2.
25.82 ACC1	Defines the acceleration for set 1.
25.83 DEC1	Defines the deceleration for set 1.
25.84 ACC2	Defines the acceleration for set 2.
25.85 DEC2	Defines the deceleration for set 2.
25.86 INSPECT MODE ACC	Defines the acceleration used in the inspection mode.
25.87 INSPECT MODE DEC	Defines the deceleration used in the inspection mode.
25.88 EVAC MODE ACC	Defines the acceleration used in the evacuation mode.
25.89 EVACMODE DEC	Defines the deceleration used in the evacuation mode.
25.90 RELVL ACC/DEC	Defines the acceleration/deceleration used in the releveling mode.

Parameters	Additional information
25.91 JERK DISABLE	Selects the source for enabling/disabling all jerks.
25.92 JERK1	Defines the jerk used at the start of acceleration.
25.93 JERK2	Defines the jerk used at end of acceleration.
25.94 JERK3	Defines the jerk used at the start of leveling deceleration.
25.95 JERK4	Defines the jerk used at the end of leveling deceleration.
25.96 JERK5	Defines the jerk used at the start of stopping deceleration.
25.97 JERK6	Defines the jerk used at the end of stopping deceleration.
25.98 JERK7	Defines the jerk used during releveling.

Diagnostics

Signals	Additional information
Actual signals	
05.05 LIFT SPEED REF	Displays the ramped and shaped speed reference in m/s.

Smart slowdown

The Smart slowdown function optimizes the travel time of the elevator by reducing the leveling path. That is, transition from the traveling speed (ie, nominal speed, medium speed, speed2 or speed 3) to the leveling speed is optimally delayed based on the knowledge of the physical leveling distance (ie, the distance between the leveling and stop switches).

The function is useful in operation situations where the desired traveling speed is not reached before the leveling command is activated (for example, in case of short floor distance). If the leveling command is activated while the drive is still accelerating, the achieved speed is maintained and no further acceleration is done.

The figure below illustrates the operation of the function.

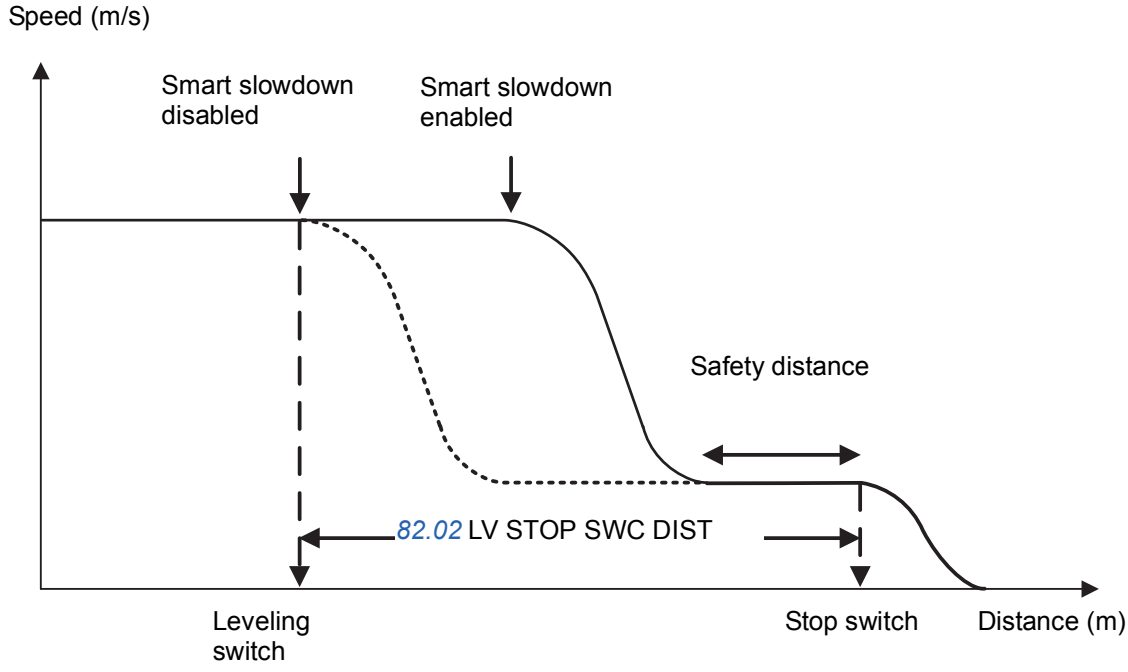

Safety distance = Distance traveled with the leveling speed (parameter *82.03* SAFETY MARGIN defines what percentage of parameter *82.02* LV STOP SWC DIST is used as the safety distance.)

You can enable the Smart slowdown function with estimated speed or with an encoder using parameter *82.01* SMART SLOWDN SEL.

- When the function is enabled with estimated speed, it measures the distance traveled by integrating the actual speed (m/s) in meters.
- When the function is enabled with an encoder, it uses actual signal *01.10* POS ACT to measure the distance traveled.

Settings

1. Parameters	2. Additional information
82.01 SMART SLOWDN SEL	Enables/disables the Smart slowdown function.
82.02 LV STOP SWC DIST	Defines the distance between leveling and stop switches.
82.03 SAFETY MARGIN	Defines what percentage of parameter *82.02* is used as the safety distance.

Diagnostics

3. Signals	4. Additional information
Actual signals	
01.10 POS ACT	Actual position of the encoder.
05.06 LVLING DIST ACT	Displays the actual leveling distance.
05.07 FLOOR DISTANCE	Displays the distance between two floors.
Alarms	
SMART SLOWDOWN CONFIG	Smart slowdown function is enabled with an encoder, but encoder/resolver feedback is not configured.

Mechanical brake control

The elevator system is equipped with a mechanical brake that holds the elevator car at standstill when the elevator drive is stopped or not powered. Typically, the drive controls the brake open or closed via a relay output. Alternatively, the brake can also be controlled by the elevator controller.

Mechanical brake control (with or without monitoring) is activated with parameter *35.01* BRAKE CONTROL. The monitoring signal can be connected to, for example, a digital input. The brake on/off value is reflected by *03.06* BRAKE COMMAND, which should be connected to a relay (or digital) output. The brake will open upon drive start after the delay *35.04* BRAKE OPEN DELAY has elapsed and the requested motor start torque (selected with *35.80* BRK OPEN TRQ SEL) is available. The brake will close after motor speed decreases below *35.06* BRAKE CLOSE SPD and the delay *35.09* BRAKE CLOSE DLY has elapsed. When the brake close command is issued, the motor torque is stored into *03.05* BRAKE TORQ MEM.

WARNING! Make sure that the machinery into which the drive with brake control function is integrated fulfills the personnel safety regulations.
Note that the frequency converter (as defined in EN81-1), is not considered as a safety device mentioned in the European Elevator Directive and related harmonised standards.
If the Elevator Directive is not applicable, note that the frequency converter (a Complete Drive Module or a Basic Drive Module, as defined in IEC 61800-2), is not considered as a safety device mentioned in the European Machinery Directive and related harmonised standards. Thus, the personnel safety of the complete machinery must not be based on a specific frequency converter feature (such as the brake control function), but it has to be implemented as defined in the application-specific regulations.

The Mechanical brake control function also performs the following tasks:

- Torque proving checks
- Brake slip checks
- Brake open torque selection.

Torque proving

The Torque proving function ensures that the drive is able to produce torque before it releases the brake and starts the elevator operation. For this, the function performs an electrical elevator system check.

Before opening the brake, the function compares the calculated actual torque of the drive with a reference torque (parameter *35.83* TORQ PROVING REF). If the torque proving is not successful, that is, the actual torque does not exceed the reference value during a proving delay (parameter *35.84* TRQ PROV FLT DLY), the function prevents the brake from opening, and the drive trips on fault TORQUE PROVE.

Torque proving can be selected to be performed at every start or at start after defined time period of standby (>30min stby, >1 hr stby, >90 min stby, >2 hr stby).

Settings

Parameters	Additional information
35.82 TORQUE PROVING	Enables/disables the Torque proving function.
35.83 TORQ PROVING REF	Defines the torque proving reference.
35.84 TRQ PROV FLT DLY	Defines the time delay for generating fault TORQUE PROVE.

Diagnostics

Signals	Additional information
Actual signals	
05.02 LIFT FW bit 1 (TORQUE PROVE)	Displays whether fault TORQUE PROVE has occurred or not.
Faults	
TORQUE PROVE	The drive was not able to provide sufficient torque during a torque proving sequence.

Brake slip check

This function checks for any brake slips while torque proving is performed with the brake closed. If the actual elevator speed (*05.04* LIFT SPEED ACT) exceeds the defined speed limit (parameter *35.85* SLIP SPEED LIM) during torque proving and stays there for longer than defined with parameter *35.86* SLIP FAULT DELAY, the drive trips on fault BRAKE SLIP.

Settings

Parameters	Additional information
35.85 SLIP SPEED LIM	Defines the speed limit to be checked during torque proving.
35.86 SLIP FAULT DELAY	Defines the time delay for generating fault BRAKE SLIP.

Diagnostics

Signals	Additional information
Actual signals	
05.02 LIFT FW bit 2 (BRAKE SLIP)	Displays whether fault BRAKE SLIP has occurred or not.
Faults	
BRAKE SLIP	The brake slipped while a torque proving sequence was taking place.

Brake open torque selection

The Brake open torque selection function ensures the right starting torque level after brake opening and, thus, prevents the speed from dropping. The function is in operation when torque proving is completed and the brake open command is triggered.

With parameter *35.80* BRK OPEN TRQ SEL, you can select the following sources for the brake open torque:

- *02.05* AI1 SCALED or *02.07* AI2 SCALED: brake open torque source as an AI-scaled value. Used when a load sensor is available.
- *35.07* BRAKE OPEN TORQ: brake open torque source as a fixed value. Used with counter weightless lift.

The starting torque can be ramped up and down by using a user defined ramp time.

- Parameter *35.10* TORQ RAMP UP – ramp time to build up the starting torque against the closed brake.
- Parameter *35.11* TORQ RAMP DOWN – time to ramp down the torque to zero, after brake is closed.

Settings

Parameters	Additional information
35.80 BRK OPEN TRQ SEL	Selects the source of the brake open torque to be used.
35.07 BRAKE OPEN TORQ	Defines the brake open torque value used when selected as the source of parameter *35.80*.
35.10 TORQ RAMP UP	Defines the brake open torque ramp up time.
35.11 TORQ RAMP DOWN	Defines the brake open torque ramp down time.

Operation time scheme

The timing diagram below illustrates the operation time scheme of mechanical brake control.

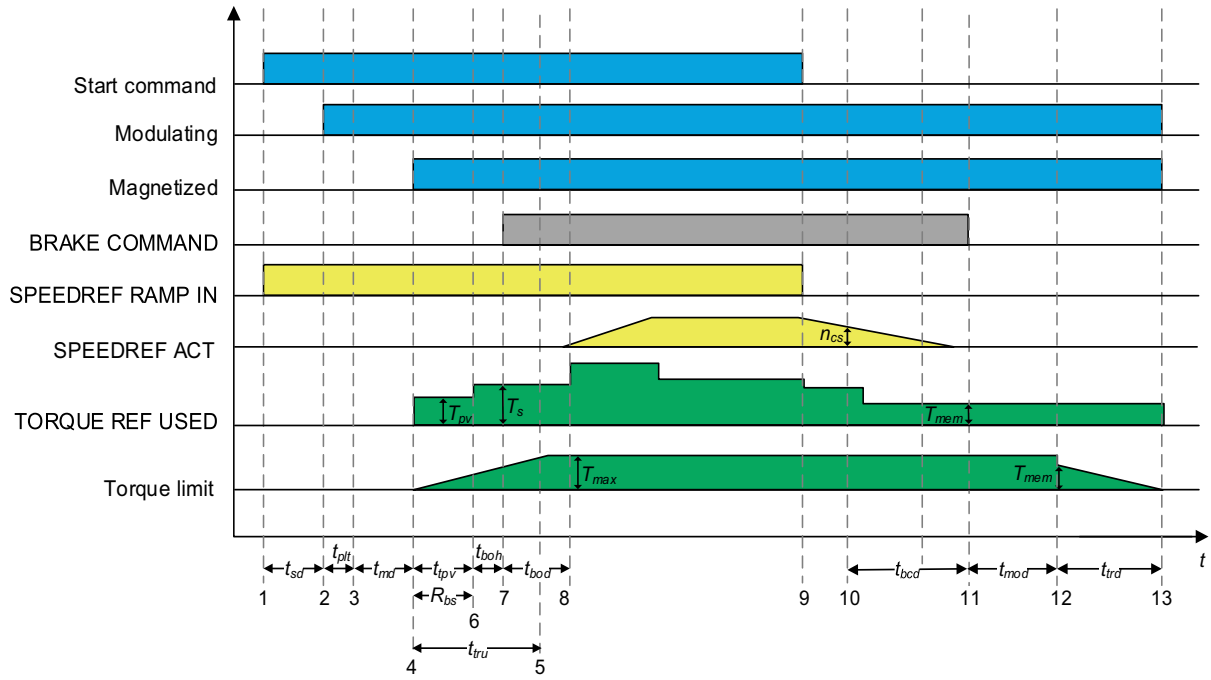

t_{sd}	Start delay (par. *10.06*)
T_{plt}	Phase loss test (par. *99.16*)[1]
t_{md}	Magnetizing delay (par. *10.07*)[2]
t_{tpv}	Torque proving delay (par. *35.84*)[3]
t_{tru}	Torque ramp up time (par. *35.10*)
t_{boh}	Brake open hold (internal delay of DriveSPC, $t_{boh} \approx 30$ ms)
t_{bod}	Brake open delay (par. *35.04*)
t_{bcd}	Brake close delay (par. *35.09*)
t_{mod}	Modulation delay (par. *35.05*)
t_{trd}	Torque ramp down time (par. *35.11*)
n_{cs}	Brake close speed (par. *35.06*)
T_s	Start torque (par. *35.81*)
T_{mem}	Memorized torque (par. *03.05*)
R_{bs}	Brake slip check region[4]

1 Phase loss test, when disabled $T_{plt} = 0$ s, when enabled $T_{plt} \approx 50$ ms

2 AM: t_{md} = parameter *10.07* DC MAGN TIME, PMSM: $t_{md} = 0$ s

3 If torque is not proved within the torque proving time delay, the drive trips on fault TORQUE PROVE.

4 If torque proving is in progress and value in parameter *05.04* LIFT SPEED ACT is greater than value in parameter *35.85* SLIP SPEED LIM for a longer period than defined with parameter *35.86* SLIP FAULT DLY, the drive trips on fault BRAKE SLIP.

Inertia compensation

Inertia compensation function eliminates speed overshoot or undershoot by compensating for inertia effects. The function can be enabled when *28.12* MOMENT OF INERT is non-zero. A value can be obtained for inertia compensation with parameter *28.11* INERTIA AUTOTUNE, with the following two methods:

METHOD 1 – calculates the inertia compensation torque (*03.09* ACC COMP TORQ) required during acceleration and deceleration based on the elevator system mechanics (total mass, sheave diameter, roping and gear ratio).

METHOD 2 – measures the system moment of inertia (parameter *28.12* MOMENT OF INERT) when the user triggers the Inertia autotune procedure with parameter *28.11* INERTIA AUTOTUNE. After the function is triggered, the elevator must be operated once upward and once downward direction to obtain the value. Between the two operations there should be a Stop state.

Note: The function only makes observation and does not alter the elevator operation. For this to happen, the drive needs uniform acceleration from Stopped state in both directions for at least 200 ms.

Until both upward and downward operations are completed, the drive displays an alarm, *2089* INERTIA AUTOTUNE. If the operation is not successful, moment of inertia is written as zero with parameter *28.12* MOMENT OF INERT.

Note: Changes to parameter *28.12* are not effective when this mode is active.

The parameter *03.09* ACC COMP TORQ shows the calculated or measured value for the moment of inertia. You can change the value if further fine tuning is required.

Settings

Parameters	Additional information
28.08 CAR WEIGHT	Defines car weight.
28.09 ROPE WEIGHT	Defines rope weight.
28.10 COUNTER WEIGHT	Defines counter weight.
28.11 INERTIA AUTOTUNE	Enables auto tuning for Inertia compensation.
28.12 MOMENT OF INERT	Defines the moment of inertia for lift system or lift load calculated during start-up.

Diagnostics

Signals	Additional information
Actual signals	
03.09 ACC COMP TORQ	Displays the inertia compensation torque calculated by the Inertia compensation function.

Protection functions

The following functions can be used to check and ensure proper operation of elevator control in different operating conditions: Speed match, Inverter overload, Motor stall and Leveling overtime stop.

Other protection functions cover Thermal motor protection, DC voltage control and Programmable protection functions.

Speed match

The Speed match function checks that the motor actual speed (speed estimate or measured with an encoder, see parameter *22.01* SPEED FB SEL) follows the speed reference within the desired window during acceleration, deceleration and when running in a steady state (at set-point speed). The function also ensures that the brake does not slip while the drive is in a stopped state with the brake closed.

You can enable the Speed match function with parameter *81.01* SPEED MATCH. There are two parameters for defining the speed match deviation: *81.02* SPD STD DEV LVL is used for checking the deviation in a steady state, whereas *81.03* SPD RMP DEV LVL is used for checking the deviation during acceleration and deceleration.

While the drive is running, it trips on fault SPEED MATCH if the following conditions are met.

- The motor is running in a steady state and the difference of the motor actual speed and the ramped speed reference is greater than the value of parameter *81.02* SPD STD DEV LVL for a period longer than defined with parameter *81.04* SPEED MATCH DLY.

  Example: If parameter *81.02* SPD STD DEV LVL is set to 0.5 m/s, the drive will not trip on fault SPEED MATCH as long the difference of the motor actual speed and the speed reference does not exceed 0.5 m/s (that is, it does not go outside the enclosed area in the figure below) for a period longer than defined with parameter *81.04* SPEED MATCH DLY (0.5 s).
- The motor is accelerating/decelerating and the difference of the motor actual speed and the ramped speed reference is greater than the value of parameter *81.03* SPD RMP DEV LVL for a period longer than defined with parameter *81.04* SPEED MATCH DLY.

  Example: If parameter *81.03* SPD RMP DEV LVL is set to 0.6 m/s, the drive will not trip on fault SPEED MATCH during acceleration/deceleration as long as the difference of the motor actual speed and the ramped speed reference does not exceed 0.6 m/s (that is, it does not go outside the enclosed area in the figure below) for a period longer than defined with parameter *81.04* SPEED MATCH DLY (0.5 s).

When the mechanical brake is closed and the drive stopped, that is, brake control is active, the drive generates alarm BRAKE SLIP if the difference of the motor actual speed and the speed reference is greater than the value of parameter *81.02* SPD STD DEV LVL for a period longer than defined with parameter *81.04* SPEED MATCH DLY.

The figure below illustrates the operation of the Speed match function.

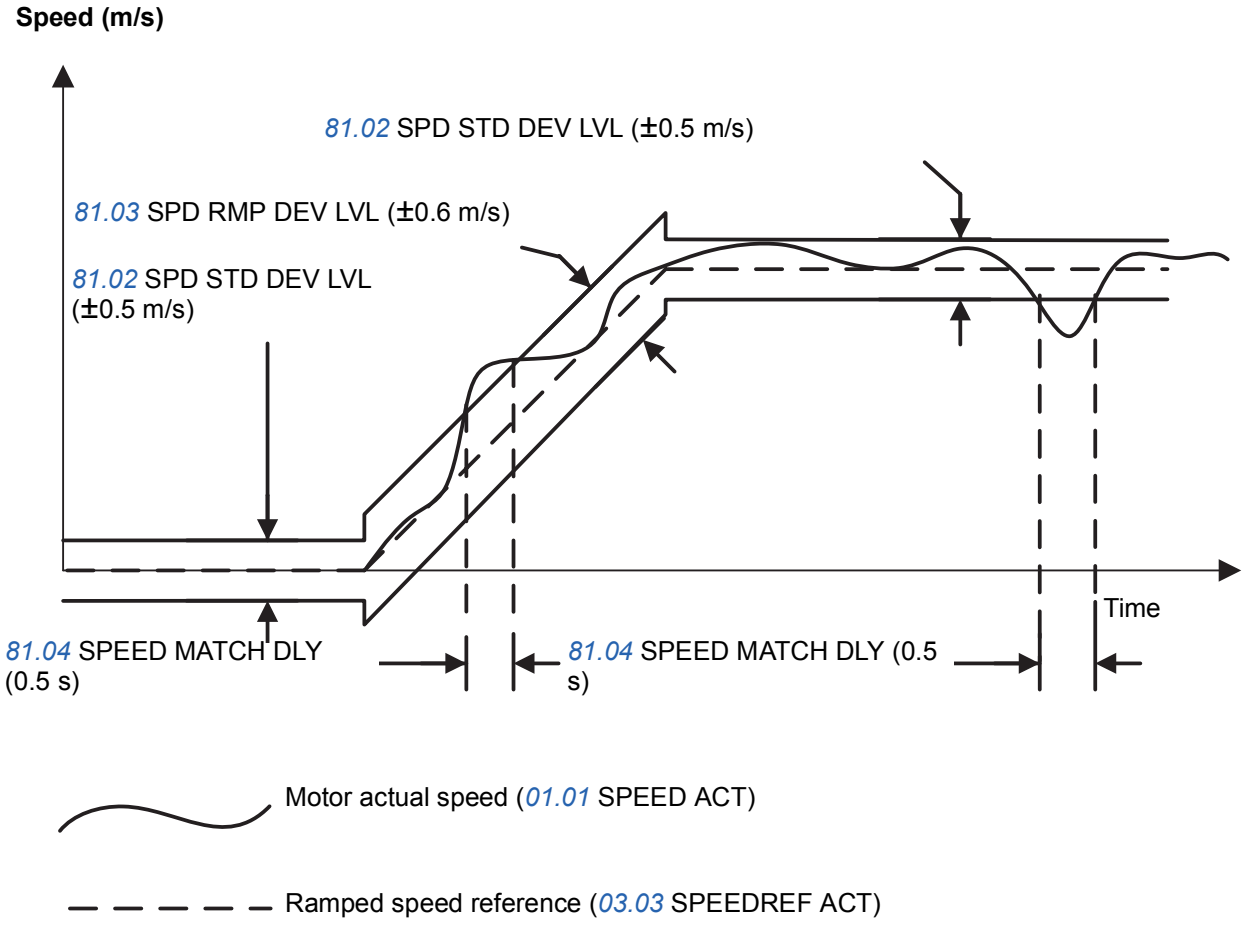

Settings

Parameters	Additional information
81.01 SPEED MATCH	Enables/disables the Speed match function.
81.02 SPD STD DEV LVL	Defines the speed matching steady state deviation.
81.03 SPD RMP DEV LVL	Defines the speed matching ramp state deviation.
81.04 SPEED MATCH DLY	Defines the time delay for generating fault SPEED MATCH.

Diagnostics

Signals	Additional information
Actual signals	
05.01 LIFT SW bit 11 (BRAKE SLIP)	Displays whether alarm BRAKE SLIP has occurred or not.
05.02 LIFT FW bit 0 (SPEED MATCH)	Displays whether fault SPEED MATCH has occurred or not.

Signals	Additional information
Alarms	
BRAKE SLIP	The brake is slipping while the motor is not running.
Faults	
SPEED MATCH	The speed error is higher than defined with parameter *81.02* SPD STD DEV LVL in the steady state or defined with parameter *81.03* SPD RMP DEV LVL in the ramp state, and the time delay defined with parameter *81.04* SPEED MATCH DLY has elapsed.

Motor stall

The Motor stall function protects the motor in stall situations where torque level is about to rise too high at lower speeds, that is, it monitors that the motor torque (*01.06* TORQUE) stays within user-defined torque limits.

You can define the torque limits with parameters *81.05* STALL TORQ MAX and *81.06* STALL TORQ MIN. If the motor torque exceeds these limits while the motor is running at a speed lower than defined with parameter *81.07* STALL SPEED LIM, the drive trips on fault MOTOR STALL after the period defined with parameter *81.08* STALL FAULT DLY.

The function is enabled when *81.07* STALL SPEED LIM is > 0.

Settings

Parameters	Additional information
81.05 STALL TORQ MAX	Defines the maximum torque limit for generating fault MOTOR STALL.
81.06 STALL TORQ MIN	Defines the minimum torque limit for generating fault MOTOR STALL.
81.07 STALL SPEED LIM	Defines the speed limit for the Motor stall function.
81.08 STALL FAULT DLY	Defines the time delay for generating fault MOTOR STALL.

Diagnostics

Signals	Additional information
05.02 LIFT FW bit 4 (MOTOR STALL)	Displays whether fault MOTOR STALL has occurred or not.
Faults	
MOTOR STALL	Motor actual speed is lower than defined with parameter *81.07* STALL SPEED LIM, the drive has exceeded the torque limits defined with parameters *81.05* STALL TORQ MAX and *81.06* STALL TORQ MIN, and the time delay defined with *81.08* STALL FAULT DLY has elapsed.

Leveling overtime stop

This function generates an emergency stop signal (OFF3) if the time the elevator travels at the leveling speed exceeds the time defined with parameter *81.09* LVL MAX TIME. With this function, possible damage to the elevator system can be avoided in situations where the stop command is not received on time after the leveling command due to an electrical or mechanical problem.

The function is enabled when *81.09* LVL MAX TIME is > 0.

Settings

Parameters	Additional information
81.09 LVL MAX TIME	Defines the maximum time the drive can run at the leveling speed.

Diagnostics

Alarms	Additional information
LVL TIME OVER	Leveling overtime stop function is activated during the last run.

Thermal motor protection

With parameters *46.07* ... *46.10*, you can set up motor overtemperature protection and configure motor temperature measurement (if present).

The motor can be protected against overheating by measuring the motor temperature with PTC or KTY84 sensors.

Temperature sensors

It is possible to detect motor overtemperature by connecting a motor temperature sensor to thermistor input TH of the drive or to optional encoder interface module FEN-xx.

Constant current is fed through the sensor. The resistance of the sensor increases as the motor temperature rises over the sensor reference temperature Tref, as does the voltage over the resistor. The temperature measurement function reads the voltage and converts it into ohms.

The figure below shows typical PTC sensor resistance values as a function of the motor operating temperature.

Temperature	PTC resistance
Normal	0…1.5 kohm
Excessive	≥ 4 kohm

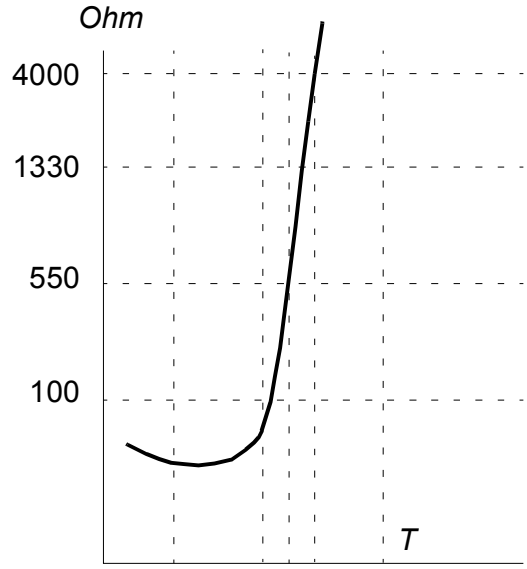

The figure below shows typical KTY84 sensor resistance values as a function of the motor operating temperature.

KTY84 scaling
90 °C = 936 ohm 110 °C = 1063 ohm 130 °C = 1197 ohm 150 °C = 1340 ohm

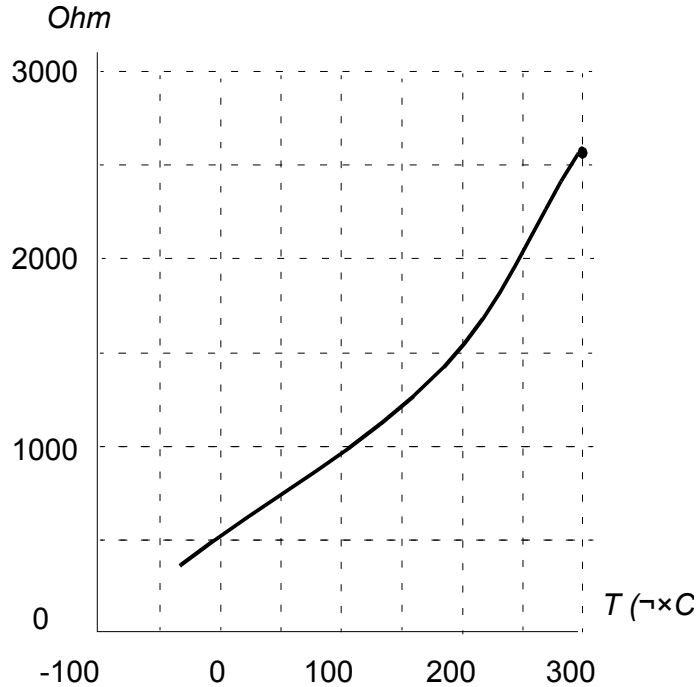

It is possible to adjust the motor temperature supervision limits and select how the drive reacts when overtemperature is detected.

WARNING! The connection of motor temperature sensor requires double or reinforced insulation between motor live parts and the sensor because the thermistor input on the JCU control unit is not insulated according to IEC 60664.
If the assembly does not fulfill the requirement,
- protect the I/O board terminals against contact and make sure that it is not connected to any other equipments
or
- isolate the temperature sensor from the I/O terminals.

The figure below shows a motor temperature measurement when thermistor input TH is used.

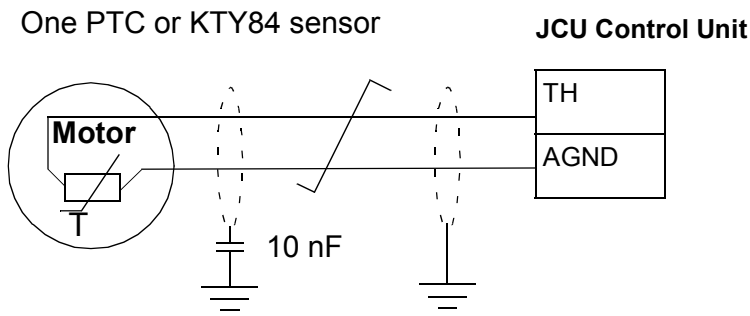

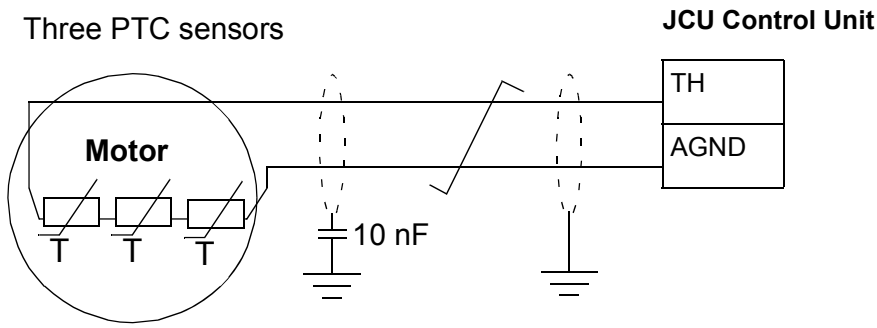

For encoder interface module FEN-xx connection, see the *User's manual* of the appropriate encoder interface module.

Settings

Parameters	Additional information
46 FAULT FUNCTIONS	Settings for thermal protection of the motor.

Voltage control and trip limits

The control and trip limits of the intermediate DC voltage regulator are relative to an automatically determined supply voltage. The actual voltage used is shown by parameter *01.15* USED SUPPLY VOLT. The nominal DC voltage (U_{DC}) equals this value 1.35 times.

Automatic identification of the supply voltage is performed every time the drive is powered.

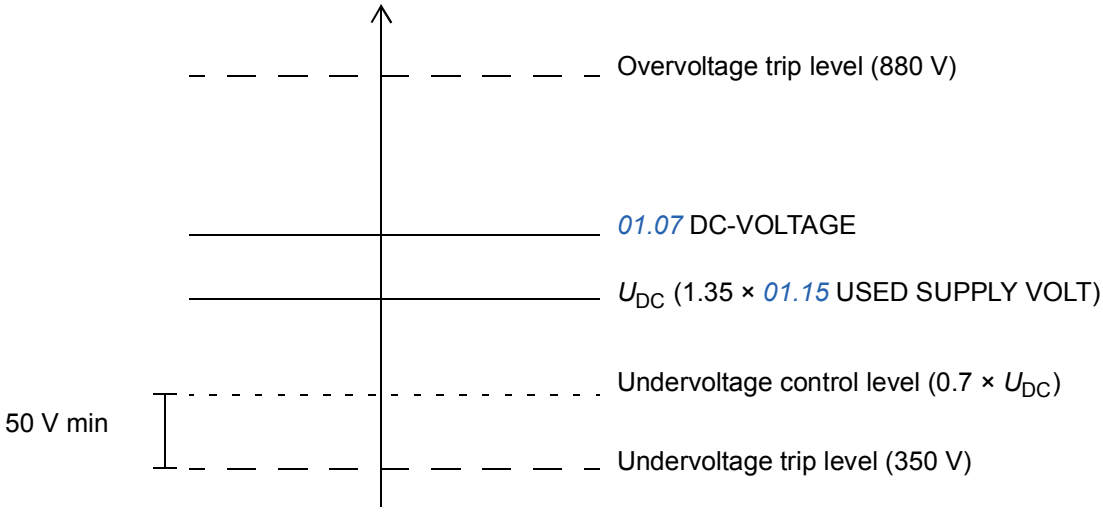

The intermediate DC circuit is charged over an internal resistor which is bypassed when the correct level (80% of U_{DC}) is reached and voltage is stabilised.

Brake chopper

The built-in brake chopper of the drive can be used to handle the energy generated by a decelerating motor.

For the parameters related to the brake chopper and brake resistor, see parameter group *48 BRAKE CHOPPER*. For more information on the brake resistor connection, see *Resistor braking* on page *Resistor braking*.

Settings

Parameters	Additional information
48 BRAKE CHOPPER	Configuration of the internal brake chopper.

Diagnostics

Actual signals	Additional information
01.07 DC-VOLTAGE	Measured intermediate circuit voltage in V.
01.15 USED SUPPLY VOLT	Automatically determined supply voltage.
05.02 LIFT FW bit 11 UNDERVOLTAGE	Displays the status of the intermediate circuit DC voltage.

Programmable protection functions

The programmable protection functions can be implemented with the following parameters.

- *46.01* EXTERNAL FAULT – Selects a source for an external fault signal. When the signal is lost, a fault is generated.
- *46.02* MOT PHASE LOSS – Selects how the drive reacts whenever a motor phase loss is detected.
- *46.03* EARTH FAULT – Selects how the drive reacts when an earth fault or current unbalance is detected in the motor or the motor cable. The earth fault detection is based on sum current measurement. Note that
  - an earth fault in the supply cable does not activate the protection
  - in a grounded supply, the protection activates in 200 milliseconds
  - in an ungrounded supply, the supply capacitance should be 1 microfarad or more
  - the capacitive currents caused by shielded motor cables up to 300 metres will not activate the protection
  - the protection is deactivated when the drive is stopped.
- *46.04* SUPPL PHS LOSS – Selects how the drive reacts whenever a supply phase loss is detected.
- *46.05* STO DIAGNOSTIC – The drive monitors the status of the Safe torque off input. For more information on the Safe torque off function, see *Safe torque off function for ACL30 drive application guide* (3AXD50000045959 [English]).
- *46.06* CROSS CONNECTION – The drive can detect if the supply and motor cables have accidentally been switched (for example, if the supply is connected to the motor connection of the drive). The parameter selects whether a fault is generated or not.

User lock

For better cybersecurity, it is highly recommended that you set a master pass code to prevent e.g. the changing of parameter values and/or the loading of firmware and other files.

⚠ **WARNING!** ABB will not be liable for damages or losses caused by the failure to activate the user lock using a new pass code. See *Cyber security disclaimer* (page *28*).

To activate the user lock for the first time, enter the default pass code, 10000000, into *16.03* PASS CODE. This will make parameters *16.12*…*16.14* writable. Then enter a new pass code into *16.12* USER PASS CODE, and confirm the code in *16.13* CONFIRM PASS CODE. In *16.14* USER LOCK FUNC, define the actions that you

want to prevent (we recommend you select all the actions unless otherwise required by the application).

To close the user lock, enter an invalid pass code into *16.03* PASS CODE, or cycle the power. With the lock closed, parameters *16.12*…*16.14* are read only.

To reopen the lock, enter your pass code into *16.03* PASS CODE. This will again make parameters *16.12*…*16.14* writable.

Settings

Parameters *16.03* (page *230*) and *16.12*…*16.14* (page *233*).

Inputs and outputs

When the drive is in external control, the following analog and digital inputs/outputs can be used to control the drive.

Analog inputs

The drive has two programmable analogue inputs, AI1 and AI2. Both inputs can be used either as a voltage input or current input (-11…11 V or -22…22 mA). Both inputs can be filtered and scaled. The input type is selected with jumpers J1 and J2 on the JCU Control Unit, respectively. The inaccuracy of the analogue inputs is 1% of the full scale range and the resolution is 11 bits (+ sign). The hardware filter time constant is approximately 0.25 ms.

Settings

Parameters	Additional information
13 ANALOGUE INPUTS	Settings for the analogue inputs.

Diagnostics

Actual signals	Additional information
02.04 AI1	Analogue input AI1 value in V or mA.
02.05 AI1 SCALED	Scaled value of analogue input AI1.
02.06 AI2	Analogue input AI2 value in V or mA.
02.07 AI2 SCALED	Scaled value of analogue input AI2.

Analog outputs

The drive has two programmable analogue outputs: one current output AO1 (0…20 mA) and one voltage output AO2 (-10…10 V). Both outputs can be filtered and scaled. The resolution of the analogue outputs is 11 bits (+ sign) and the inaccuracy is 2% of the full scale range. The analogue output signals can be proportional to, eg, motor speed, process speed (scaled motor speed), output frequency, output current, motor torque, and motor power. It is also possible to write a value to an analogue output through a serial communication link (eg, a fieldbus link).

Settings

Parameters	Additional information
15 ANALOGUE OUTPUTS	Settings for the analogue outputs.

Diagnostics

Actual signals	Additional information
02.08 AO1	Analogue output AO1 value in mA.
02.09 AO2	Analogue output AO2 value in V.

Digital inputs and outputs

The drive has six digital inputs (DI1, DI2, DI3, DI4 , DI5 and DI6) and three digital inputs/outputs (DIO1, DIO2 and DIO3). The six digital inputs and three digital inputs/outputs can be inverted.

The number of digital inputs/outputs can be increased by using an FIO-01 I/O extension (activated with parameter *12.80* EXT IO SEL). In addition, if installed to the drive, the encoder module FEN-xx provides two additional digital inputs.

For more information on the I/O extension, see *FIO-01 digital I/O extension user's manual* (3AFE68784921 [English]). For the default digital inputs/outputs, see chapter Connecting the control cables: JCU control unit.

Settings

Parameters	Additional information
12.80 EXT IO SEL	Activates an I/O extension installed into Slot 2.
12.81 EXT IO DIO1 CONF	Selects whether extension DIO1 is used as a digital input or as a digital output.
12.82 EXT IO DIO2 CONF	Selects whether extension DIO2 is used as a digital input or as a digital output.
12.83 EXT IO DIO3 CONF	Selects whether extension DIO3 is used as a digital input or as a digital output.
12.84 EXT IO DIO4 CONF	Selects whether extension DIO4 is used as a digital input or as a digital output.
12.85 EXT DIO1 OUT PTR	Selects a drive signal to be connected to extended digital output EXT DIO1.
12.86 EXT DIO2 OUT PTR	Selects a drive signal to be connected to extended digital output EXT DIO2.
12.87 EXT DIO3 OUT PTR	Selects a drive signal to be connected to extended digital output EXT DIO3.
12.88 EXT DIO4 OUT PTR	Selects a drive signal to be connected to extended digital output EXT DIO4.

Diagnostics

Actual signals	Additional information
02.01 DI STATUS	Status word of the digital inputs.
02.03 DIO STATUS	Status word of the digital inputs/outputs.
02.14 FEN DI STATUS	Status of digital inputs of FEN-xx encoder interfaces in drive option Slots 1 and 2.
02.80 EXT DIO STATUS	Status of the extended digital inputs/outputs.

Relay outputs

The drive has one relay output. Two additional relay outputs can be added by using an FIO-01 I/O extension (enabled with parameter *12.80* EXT IO SEL). For more information on the I/O extension, see *FIO-01 digital I/O extension user's manual* (3AFE68784921 [English]).

Settings

Parameters	Additional information
12.07 RO1 OUT PTR	Selects a drive signal to be connected to relay output RO1.
12.80 EXT IO SEL	Activates an I/O extension installed into Slot 2.
12.89 EXT RO1 OUT PTR	Selects a drive signal to be connected to extended relay output EXT RO1.
12.90 EXT RO2 OUT PTR	Selects a drive signal to be connected to extended relay output EXT RO2.

Diagnostics

Actual signals	Additional information
02.02 RO STATUS	Status of the relay output.
02.81 EXT RO STATUS	Status of the extended relay outputs.

Autophasing for permanent magnet synchronous motors

Note: Autophasing must be performed before the lift is in operation. Otherwise uncontrolled movement of the lift can occur.

Autophasing is an automatic measurement routine to determine the angular position of the magnetic flux of a permanent magnet synchronous motor. The angular position of the magnetic flux is required to control the motor torque accurately.

Sensors like absolute encoders and resolvers indicate the position of the magnetic flux at all times after autophasing is performed. A standard pulse encoder determines the rotor position only when it rotates. This requires a new autophasing at every power-up.

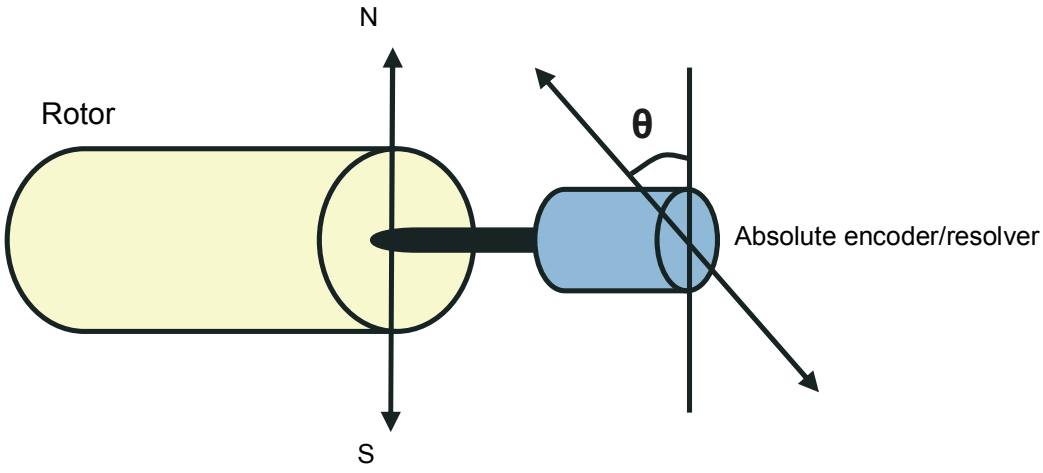

Note: Autophasing is not required if the angle of magnetic flux is known and/or stored in the encoder memory (EnDat or Hiperface).

- If the angle is known, example, marked to motor name plate, it can be set manually with parameter *97.17* POS OFFSET USER. It is also needed to set parameters *97.01* USE GIVEN PARAMS = UserPosOffs and *99.12* POS OFFSET SRC = Drive mem.
- If the angle offset is stored in the encoder memory, it can be read by setting parameter *99.12* POS OFFSET SRC = Encoder mem. The reading from encoder must be triggered by selecting the parameter *90.06* ENC PAR REFRESH.

Autophasing is performed with permanent magnet synchronous motors in the following cases:

- One-time measurement when an absolute encoder or resolver is used
- At every power-up when an incremental encoder is used

Autophasing modes

Several autophasing modes can be set with parameter *99.10* IDRUN MODE:

- For Turning mode without the load connected – select Autophs turn
- For Turning mode with the load connected – select Autophs rope
- For Static modes 1 and 2 perform pulse test with a closed brake – select Autophs st1/ Autophs st2.

Turning mode – is the most robust and accurate method. In this mode, the motor shaft can be turned back and forward (±360/polepairs)° to determine the rotor position. The ropes must be removed from the traction sheave for load free movement.

Turning mode with ropes on – can be used if the lift cabin is allowed to move few tens of centimeters up. This method uses the natural unbalance of the lift when the cabin is empty. During the autophasing procedure, the cabin moves few tens of centimeters upward and during this movement drive detects the angle offset. The cabins moves very slowly due to the drive braking feature.

Static modes – can be used if the motor cannot be turned when the load is connected. As the characteristics of different motors differ, test and select the suitable mode.

Encoder angle offset write to 0 – The autophasing offset angle can be used to set the zero position of encoder. When the autophasing offset angle is measured, it can be written to the encoder memory as zero position with parameter *99.12* POS OFFSET SRC = Set zero pos. Also select parameter *90.06* ENC PAR REFRESH to trigger the written value to encoder. After this configuration, the drive can use a zero offset angle.

Settings

Parameters	Additional information
90.06 ENC PAR REFRESH	Forces a reconfiguration of the FEN-xx interfaces, which is needed for any parameter changes in groups 90…93 to take effect.
97.01 USE GIVEN PARAMS	Activates the motor model parameters *97.02*…*97.14* and the rotor angle offset parameter *97.17*.
97.17 POS OFFSET USER	Defines an angle offset between the zero position of the synchronous motor and the zero position of the position sensor.
99.10 IDRUN MODE	Selects the type of the motor identification performed at the next start of the drive in the DTC mode to identify the motor characteristics for optimum motor control.
99.12 POS OFFSET SRC	Select the source for the angle offset between the zero position of the synchronous motor and the zero position of the position sensor.

Emergency stop

Note: The user is responsible for installing the emergency stop devices and all the additional devices needed for the emergency stop to fulfill the required emergency stop category classes.

Two emergency stops are available:

Emergency stop OFF1 – The emergency stop signal is connected to the digital input which is selected as the source for the emergency stop activation (parameter *10.05* EM STOP OFF1). The drive is stopped within the active deceleration time.

Emergency stop OFF3 – The emergency stop signal is activated by the Leveling overtime stop function (see page *158*). The drive is stopped within the time defined with parameter *22.06* EM STOP TIME.

Note: When an emergency stop signal is detected, the emergency stop cannot be canceled, even though the signal is canceled.

Settings

Parameters	Additional information
10.05 EM STOP OFF1	Selects the source for the emergency stop OFF1.
22.05 SPEED SCALING	Shows the motor rotational speed (rpm) that corresponds to the lift nominal speed (m/s).
22.06 EM STOP TIME	Defines the time within which the drive is stopped if an emergency stop OFF3 is activated.

Diagnostics

Actual signals	Additional information
06.01 STATUS WORD 1 bit 5 (EM STOP (OFF3)	Displays whether emergency stop OFF3 is active or not.
06.02 STATUS WORD 2 bit 6 (OFF1)	Displays whether emergency stop OFF1 is active or not.

Encoder support

Encoder module selection

Encoder module selection covers the settings for encoder activation, emulation, TTL echo, and encoder cable fault detection.

The following optional interface modules are available:

- TTL Encoder interface Module FEN-01: two TTL inputs, TTL output (for encoder emulation and echo), two digital inputs for position latching, PTC temperature sensor connection
- Absolute Encoder interface Module FEN-11: absolute encoder input, TTL input, TTL output (for encoder emulation and echo), two digital inputs for position latching, PTC/KTY temperature sensor connection
- Resolver interface Module FEN-21: resolver input, TTL input, TTL output (for encoder emulation echo), two digital inputs for position latching, PTC/KTY temperature sensor connection
- HTL Encoder interface Module FEN-31: HTL encoder input, TTL output (for encoder emulation and echo), two digital inputs for position latching, PTC/KTY temperature sensor connection

The interface module is connected to drive option Slot 1 or 2.

Note: Configuration data is written into the logic registers of the interface module once after the power-up. If parameter values are changed, save values into the permanent memory using parameter *16.05* PARAM SAVE. The new settings are effective only when the drive is powered up again, or after re-configuration is forced using parameter *90.06* ENC PAR REFRESH.

For encoder/resolver configuration, see parameter groups *91 ABSOL ENC CONF* (page *268*), *92 RESOLVER CONF* (page *277*) and *93 PULSE ENC CONF* (page *278*).

Settings

Parameters	Additional information
90 ENC MODULE SEL	Settings for encoder activation, emulation, TTL echo, and communication fault detection.

Absolute encoder configuration

Absolute encoder configuration can be used when parameter *90.01* ENCODER SEL is set to *FEN-11 ABS*.

The optional FEN-11 Absolute Encoder interface Module supports the following absolute encoders:

- Incremental sin/cos encoders with or without zero pulse and with or without sin/cos commutation signals
- Endat 2.1/2.2 with incremental sin/cos signals (partially without sin/cos incremental signals*)
- Hiperface encoders with incremental sin/cos signals
- SSI (Synchronous Serial Interface) with incremental sin/cos signals (partially without sin/cos incremental signals*).
- Tamagawa 17/33-bit digital encoders (the resolution of position data within one revolution is 17 bits; multiturn data includes a 16-bit revolution count).

See also parameter group *90 ENC MODULE SEL* on page *268*, and *FEN-11 absolute encoder interface user's manual* (3AFE68784841 [English]).

Note: Configuration data is written into the logic registers of the interface module once after the power-up. If parameter values are changed, save values into the permanent memory using parameter *16.05* PARAM SAVE. The new settings will take effect when the drive is powered up again, or after re-configuration is forced using parameter *90.06* ENC PAR REFRESH.

Settings

Parameters	Additional information
91 ABSOL ENC CONF	Absolute encoder configuration.

Resolver configuration

Resolver configuration can be used when parameter *90.01* ENCODER SEL is set to *FEN-21 RES*.

The optional FEN-21 resolver interface module is compatible with resolvers which are excited by sinusoidal voltage (to the rotor winding) and which generate sine and cosine signals proportional to the rotor angle (to stator windings).

Note: Configuration data is written into the logic registers of the adapter once after the power-up. If parameter values are changed, save values into the permanent memory by parameter *16.05* PARAM SAVE. The new settings are effective only when the drive is powered up again, or after re-configuration is forced by parameter *90.06* ENC PAR REFRESH.

Resolver autotuning is performed automatically whenever the resolver input is activated after changes to parameters *92.02* EXC SIGNAL AMPL or *92.03* EXC SIGNAL FREQ. Autotuning must be forced after any changes in the resolver cable connection. This can be done by setting either *92.02* EXC SIGNAL AMPL or *92.03* EXC SIGNAL FREQ to its already existing value, and then setting parameter *90.06* ENC PAR REFRESH to *Configure*.

If the resolver (or absolute encoder) is used for feedback from a permanent magnet motor, an AUTOPHASING ID run should be performed after replacement or any parameter changes.

See also parameter group *90 ENC MODULE SEL* on page *268*, and *FEN-21 resolver interface user's manual* (3AFE68784859 [English]).

Settings

Parameters	Additional information
92 RESOLVER CONF	Resolver configuration.

Pulse encoder configuration

Pulse encoder configuration can be used for TTL/HTL input and TTL output configuration.

Parameters *93.01* ENC PULSE NR…*93.06* ENC OSC LIM can be used when a TTL/HTL encoder is used as encoder (see parameter *90.01* ENCODER SEL).

Typically, only parameter 93.01 needs to be set for TTL/HTL encoders.

Note: Configuration data is written into the logic registers of the adapter once after the power-up. If parameter values are changed, save values into the permanent memory by parameter *16.05* PARAM SAVE. The new settings will take effect when the drive is powered up again, or after re-configuration is forced by parameter *90.06* ENC PAR REFRESH.

See also parameter group *90 ENC MODULE SEL* on page *268*, and the appropriate encoder extension module manual.

Settings

Parameters	Additional information
93 PULSE ENC CONF	TTL/HTL input and TTL output configuration.

Rescue operation

Rescue operation can be used in emergency evacuation situations where the elevator car has to be run to the next floor because of a power supply failure. In such a situation, the drive is supplied by an external emergency power supply and is, thereby, switched to the low voltage mode. The elevator controller takes care of switching between the mains supply and the low voltage supply.

Due to derated power supply, the elevator car traveling speed needs to be reduced during a rescue operation. For this, the drive uses the evacuation mode (evacuation speed). Two evacuation options, automatic and manual evacuation, are available.

- In automatic/recommended mode, the drive stores the lighter load direction automatically at each start and uses that direction.
- In automatic evacuation, the drive searches the lighter load direction (up or down) and then automatically runs the elevator car to that direction.
- In manual evacuation, the elevator controller decides and issues the direction of travel.

The operation sequence during a rescue operation is as follows:

1. Power failure occurs and the drive trips.
2. Elevator controller detects a power failure.
3. Elevator controller cancels the normal operation commands.
4. Elevator controller disconnects the mains supply to the drive.
5. Elevator controller connects the low voltage supply to the drive.
6. Elevator controller activates the low voltage and evacuation modes (precondition: the drive is ready to run).
7. Elevator controller issues a start up or start down command.
8. Drive finds the lighter load travel direction (if automatic evacuation is selected).
9. Drive starts to operate at the evacuation speed.
10. Drive stops when the floor limit switch is activated (or when the start command is removed).

Switching back to normal mains supply is carried out as follows:

1. Drive is at a stopped state.
2. Elevator controller deactivates the evacuation mode.
3. Elevator controller disconnects the low voltage supply to the drive.
4. Elevator controller reconnects the mains supply to the drive.

Evacuation mode

The drive uses the evacuation mode (evacuation speed) during a rescue operation. The evacuation mode can be enabled with parameter *10.81* EVACUATION MODE. Before enabling the evacuation mode, make sure that the elevator car is stopped. With parameter *10.82* EVACUATION AUTO, you can select whether the evacuation of the elevator car is manual or fully automatic.

Manual evacuation – the drive first waits for the elevator controller to give the start up or start down signal. The evacuation travel is then conducted in the corresponding direction.

Automatic evacuation – the drive operates as follows:

1. Drive waits for the elevator controller to give the start up or start down signal.
2. Drive activates a start command in the upward direction for 2 seconds and checks the actual torque.
3. Drive is stopped for 2 seconds.
4. Drive activates the start command in the downward direction.
5. Drive monitors and stores the downward operation torque.
6. Drive compares the torque in both directions and automatically issues a start command in the direction of the lighter load.

Automatic/recommended evacuation – the drive uses the pre-stored direction information and starts in the direction of lighter load.

When the elevator operates in the evacuation mode, the drive uses parameter *80.16* EVACUATION SPEED as the speed reference and parameters *25.88* EVAC MODE ACC and *25.89* EVAC MODE DEC for acceleration and deceleration, respectively.

Jerks are disabled in the evacuation mode.

Settings

Parameters	Additional information
10.81 EVACUATION MODE	Selects the source for enabling/disabling the evacuation mode.
10.82 EVACUATION AUTO	Selects the source for enabling manual or automatic evacuation.
10.83 FLOOR LIM SWITCH	Defines the source from which the drive reads the floor limit switch signal.
25.88 EVAC MODE ACC	Defines the acceleration used in the evacuation mode.
25.89 EVAC MODE DEC	Defines the deceleration used in the evacuation mode.
80.16 EVACUATION SPEED	Defines the speed reference used in the evacuation mode.

Diagnostics

Signals	Additional information
Actual signals	
05.01 LIFT SW bit 12 (EVAC SPD ACT)	Displays whether the evacuation speed is the current speed reference used by the elevator.
05.08 EVACUATION DIR	Displays the direction of the lighter load measured during automatic evacuation.

Low voltage mode

When an external emergency power supply is connected to the drive instead of the normal mains supply, the drive is switched to the low voltage mode based on the evacuation mode signal from the elevator controller.

Note: Before the drive can be connected to the external emergency power supply, it must be at a stopped state and the normal mains supply must be disconnected.

The low voltage mode supports supply voltages in the ranges of

- 48…115 V DC
- 208…240 V AC (3-phase)
- 230 V AC (1-phase).

You can enable the low voltage mode with parameter *47.01* LOW VOLT MOD ENA. Typically, the evacuation mode signal (eg, a hardwired digital input) is connected to this parameter.

The low voltage mode also introduces parameters *47.02* LOW VOLT DC MIN and *47.03* LOW VOLT DC MAX for adjusting the minimum and maximum DC voltages, respectively. The following rules apply:

- *47.02* LOW VOLT DC MIN = 250 to 450 V
- *47.03* LOW VOLT DC MAX = 350 to 810 V
- *47.03* LOW VOLT DC MAX > *48.06* LOW VOLT DC MIN + 50 V.

When a low-voltage DC supply, such as a battery, is used, set the value of parameter *47.04* BATTERY SUPPLY or its source to 1 (TRUE). With an AC supply, set the value to 0 (FALSE).

The values in parameters *47.02*…*47.04* are effective only when the low voltage mode is active, that is, parameter *47.01* LOW VOLT MOD ENA (or its source) is set to 1.

In the low voltage mode, the default voltage control and trip levels as well as the brake chopper operation levels (see sections *Voltage control and trip limits* on page *161* and *Brake chopper* on page *161*) are changed as follows:

Level	Value of parameter *47.04* BATTERY SUPPLY	
	FALSE	**TRUE**
Supply voltage range	200…240 V AC ±10% 270…324 V DC ±10%	*48…270 V DC ±10%
Overvoltage trip level	Unaffected	Unaffected
Overvoltage control level	*47.03* LOW VOLT DC MAX	*47.03* LOW VOLT DC MAX
Undervoltage control level	*47.02* LOW VOLT DC MIN	Disabled
Undervoltage trip level	*47.02* LOW VOLT DC MIN - 50 V	Disabled
Brake chopper activation level	*47.03* LOW VOLT DC MAX - 30 V	*47.03* LOW VOLT DC MAX - 30 V
Brake chopper maximum power level	*47.03* LOW VOLT DC MAX + 30 V	*47.03* LOW VOLT DC MAX + 30 V
*Requires additional DC power supply JPO-01		

Settings

Parameters	Additional information
47.01 LOW VOLT MOD ENA	Selects a signal source that enables/disables the low voltage mode.
47.02 LOW VOLT DC MIN	Minimum DC voltage for the low voltage mode.
47.03 LOW VOLT DC MAX	Maximum DC voltage for the low voltage mode.
47.04 BATTERY SUPPLY	Selects a signal source that enables/disables external power unit supply, used with low DC supply voltages such as a battery.

Diagnostics

Signals	Additional information
Alarms	
LOW VOLT MOD CON	Low voltage mode is activated but the parameter settings are outside allowable limits.

Control through the embedded fieldbus interface: DCU 16-bit profile

Control and Status words for the DCU 16-bit profile

When the DCU 16-bit profile is in use, the embedded fieldbus interface writes the fieldbus Control Word as is to the drive Control Word bits 0 to15 (parameter *02.15* EFB MAIN CW). Bits 16 to 32 of the drive Control Word are not in use.

Status Word for the DCU 16-bit profile

When the DCU 16-bit profile is in use, the embedded fieldbus interface writes the drive Status Word bits 0 to 15 (parameter *02.16* EFB MAIN SW) to the fieldbus Status Word as is. Bits 16 to 32 of the drive Status Word are not in use.

References for the DCU 16-bit profile

The ABB Drives profiles support the use of two fieldbus references, REF1 and REF2. The references are 16-bit words each containing a sign bit and a 15-bit integer. A negative reference is formed by calculating the two's complement from the corresponding positive reference.

The fieldbus references are scaled before they are written into signals *02.17* EFB MAIN REF1 or *02.18* EFB MAIN REF2 for the use in the drive. Parameters *50.04* FBA REF1 MODESEL and *50.05* FBA REF2 MODESEL define the scaling and possible use of the fieldbus reference REF1 and REF2 as follows:

- If you select value *Speed*, the fieldbus reference can be used as a speed reference and it is scaled as follows:

Fieldbus reference REF1 or REF2 [integer]	Corresponding speed reference in the drive [rpm]
20 000	value of parameter *22.05* SPEED SCALING
0	0
-20 000	-(value of parameter *22.05* SPEED SCALING)

- If you select value *Torque*, the fieldbus reference can be used as a torque reference and it is scaled as follows:

Fieldbus reference REF1 or REF2 [integer]	Corresponding torque reference in the drive [%]
10 000	100% of motor nominal torque
0	0
-10 000	-(100% of motor nominal torque)

- If you select value *Raw data*, the fieldbus reference REF1 or REF2 is the drive reference without scaling.

Fieldbus reference REF1 or REF2 [integer]	Corresponding reference in the drive [rpm or %] [1)]
32 767	32 767
0	0
-32 768	-32 768

[1)] Unit depends on the use of the reference in the drive. Rpm for speed reference and % for torque.

Actual signals for the DCU 16-bit profile

Both the ABB Drives classic profile and ABB Drives enhanced profile support the use of two fieldbus actual values, ACT1 and ACT2. The actual values are 16-bit words each containing a sign bit and a 15-bit integer. A negative value is formed by calculating the two's complement from the corresponding positive value.

The drive signals are scaled before they are written into fieldbus actual values, ACT1 and ACT2. Parameters *50.04* FBA REF1 MODESEL and *50.05* FBA REF2 MODESEL both select the drive actual signals and define the scaling as follows:

- If you select value *Speed*, drive actual signal *01.01 SPEED ACT* as scaled and written to the fieldbus actual value. The table below shows the scaling:

Value of *01.01 SPEED ACT* [rpm]	Corresponding fieldbus actual value ACT1 or ACT2 [integer]
value of parameter *22.05* SPEED SCALING	20 000
0	0
- (value of parameter *22.05* SPEED SCALING)	-20 000

- If you select value *Torque*, drive actual signal *01.06 TORQUE* is scaled and written to the fieldbus actual value. The table below shows the scaling:

Value of *01.06 TORQUE* [%]	Corresponding fieldbus actual value ACT1 or ACT2 [integer]
100% of motor nominal torque	10 000
0	0
-(100% of motor nominal torque)	-10 000

- If you select value *Raw data*, the fieldbus actual value ACT1 or ACT2 is the drive actual value without scaling.

Drive value	Corresponding fieldbus actual value ACT1 or ACT2 [integer]
32 767	32 767
0	0
-32 768	-32 768

Modbus register addresses for the DCU 16-bit profile

The table below shows the Modbus register addresses and data with the DCU16-bit communication profile.

Note: Only the least significant 16-bits of the drive 32-bit control and status words can be accessed.

Register address	Register data (16-bit)
400001	Control Word (LSW of *02.15* EFB MAIN CW)
400002	Reference 1 (*02.17* EFB MAIN REF1)
400003	Reference 2 (*02.18* EFB MAIN REF2)
400004	Data in/out 1 (Drive parameter *58.35* DATA I/O 1)
…	…
400015	Data in/out 12 (Drive parameter 58.46 DATA I/O 12)
400051	Status Word (LSW of *02.16* EFB MAIN SW)
400052	Actual value 1 (selected by parameter *50.04* FBA REF1 MODESEL)
400053	Actual value 2 (selected by parameter *50.05* FBA REF2 MODESEL)
400054	Data in/out 13 (drive parameter *58.47 Data I/O 13*)
…	…
400065	Data in/out 24 (drive parameter *58.58 Data I/O 24*)
400101…409999	Register address (16-bit drive parameter) = 400000 + 100 × group + index Drive parameter access (32-bit drive parameter) = 420000 + 200 × group + 2 × index

DCU 32-bit profile

Control and Status words for the DCU 32-bit profile

When the DCU 32-bit profile is in use, the embedded fieldbus interface writes the fieldbus Control Word as is to the drive Control Word (parameter *02.15* EFB MAIN CW).

Status word for the DCU 32-bit profile

When the DCU 32-bit profile is in use, the embedded fieldbus interface writes the drive Status Word (parameter *02.16* EFB MAIN SW) as is to the fieldbus Status Word.

References for the DCU 32-bit profile

The DCU 32-bit profile supports the use of two fieldbus references, REF1 and REF2. The references are 32-bit values consisting of two 16-bit words. The MSW (Most significant word) is the integer part and the LSW (Least significant word) the fractional part of the value. A negative reference is formed by calculating the two's complement from the corresponding positive value of the integer part (MSW).

The fieldbus references are written as is into the drive reference values (*02.17* EFB MAIN REF1 or *02.18* EFB MAIN REF2). Parameters *50.04* FBA REF1 MODESEL and *50.05* FBA REF2 MODESEL define the reference types (speed or torque) as follows:

- If you select value *Raw data*, the fieldbus reference type or possible use is not selected. The value is freely usable as a speed or torque reference in the drive.
- If you select value *Speed*, the fieldbus reference can be used as a speed reference in the drive.
- If you select value *Torque*, the fieldbus reference can be used as a torque reference in the drive.

The table below clarifies the relation between the fieldbus reference and drive reference (no scaling).

Fieldbus reference REF1 or REF2 [integer and fractional part]	**Corresponding reference in the drive [rpm or %]** [1)]
32767.65535	32767.65535
0	0
-32768.65535	-32768.65535

[1)] If the reference value is used as the speed reference, it will be the motor speed in rpm. If the reference value is used as the torque reference, it will be the motor torque in percent of the motor nominal torque.

Actual signals for the DCU 32-bit profile

The DCU 32-bit profile supports the use of two fieldbus actual values, ACT1 and ACT2. The actual values are 32-bit values consisting of two 16-bit words. The MSW (Most significant word) is the integer part and the LSW (Least significant word) the fractional part of the 32-bit value. A negative reference is formed by calculating the two's complement from the corresponding positive value of the integer part (MSW).

Parameters *50.04* FBA REF1 MODESEL and *50.05* FBA REF2 MODESEL select the drive actual signals for the fieldbus actual values ACT1 and ACT2 respectively as follows:

- If you select value *Raw data*, drive parameters *50.06* FBA ACT1 TR SRC and *50.07* FBA ACT2 TR SRC select the drive parameters for the fieldbus actual value ACT1 and ACT2 respectively.
- If you select value *Speed*, drive parameter *01.01* SPEED ACT will be written to fieldbus actual value.
- If you select value *Torque*, drive parameter *01.06* TORQUE will be written to the fieldbus actual value.

The table below clarifies the relation between the value of drive parameter and fieldbus actual value (no scaling).

Value of the selected drive signal	**Corresponding fieldbus actual value ACT1 or ACT2 [integer and fractional part]**
32767.65535	32767.65535
0	0
-32768.65535	-32768.65535

Modbus register addresses for the DCU 32-bit profile

The table below shows the Modbus register addresses and data with the DCU 32-bit profile. This profile provides native 32-bit access to the drive data.

Register address	Register data (16-bit)
400001	Control Word (*02.15* EFB MAIN CW) – Least significant 16-bits
400002	Control Word (*02.15* EFB MAIN CW) – Most significant 16-bits
400003	Reference 1 (*02.17* EFB MAIN REF1) – Least significant 16-bits
400004	Reference 1 (*02.17* EFB MAIN REF1) – Most significant 16-bits
400005	Reference 2 (*02.18* EFB MAIN REF2) – Least significant 16-bits
400006	Reference 2 (*02.18* EFB MAIN REF2) – Most significant 16-bits
400007	Data in/out 1 (Drive parameter *58.35 DATA I/O 1*)
...	...
400018	Data in/out 12 (Drive parameter *58.46 Data I/O 12*)
400051	Status Word (LSW of *02.16* EFB MAIN SW) – Least significant 16-bits
400052	Status Word (MSW of *02.16* EFB MAIN SW) – Most significant 16-bits
400053	Actual value 1 (selected by parameter *50.04* FBA REF1 MODESEL) – Least significant 16-bits
400054	Actual value 1 (selected by parameter *50.04* FBA REF1 MODESEL) – Most significant 16-bits
400055	Actual value 2 (selected by parameter *50.05* FBA REF2 MODESEL) – Least significant 16-bits
400056	Actual value 2 (selected by parameter *50.05* FBA REF2 MODESEL) – Most significant 16-bits
400057	Data in/out 13 (Drive parameter *58.47 Data I/O 13*)
…	…
400068	Data in/out 24 (Drive parameter *58.58* DATA I/O 24)
400101…409999	Register address (16-bit drive parameter) = 400000 + 100 × group + index Drive parameter access (32-bit drive parameter) = 420000 + 200 × group + 2 × index

11

Parameters

Contents of this chapter

The chapter describes the parameters and actual signals of the ACL30 elevator drive.

Terms and abbreviations

Term	Definition
Actual signal	Type of parameter that is the result of a measurement or calculation by the drive. Actual signals can be monitored, but not adjusted, by the user. Parameter groups 01…09 contain actual signals.
Bit pointer	A parameter that points to the value of a bit in another parameter (usually an actual signal), or that can be fixed to 0 (FALSE) or 1 (TRUE). In addition, bit pointer parameters may have other pre-selected choices. When adjusting a bit pointer setting on the optional control panel, “CONST” is selected to fix the value to 0 (displayed as “C.FALSE”) or 1 (“C.TRUE”). “POINTER” is selected to define a source from another parameter. The source parameter and bit is freely selectable. A pointer value is given in the format **P.xx.yy.zz**, where **xx** = parameter group, **yy** = parameter index, **zz** = bit number. Pointing to a nonexisting bit will be interpreted as 0 (FALSE).
enum	Enumerated list, ie, selection list
FbEq	Fieldbus equivalent. The scaling between the value shown on the panel and the integer used in serial communication.
INT32	32-bit integer value (31 bits + sign)
No.	Parameter number
Pb	Packed boolean
PT	Parameter protection type. See WP, WPD and WP0.
p.u.	Per unit

Term	Definition
Real	16-bit value 16-bit value (31 bits + sign) = integer value = fractional value
Real24	8-bit value 24-bit value (31 bits + sign) = integer value = fractional value
Save PF	Parameter setting is protected against power failure.
Type	Data type. See enum, INT32, Bit pointer, Val pointer, Pb, REAL, REAL24, UINT32.
UINT32	32-bit unsigned integer value
Val param	Value parameter. A value parameter has a fixed set of choices or a setting range. Example 1: Motor phase loss supervision is activated by selecting *Fault* from the selection list of parameter *46.04* MOT PHASE LOSS. Example 2: The motor nominal power (kW) is set by writing/selecting the appropriate value for parameter *99.07* MOT NOM POWER, eg, 10.
Val pointer	Value pointer. A parameter that points to the value of another actual signal or parameter. Value pointer parameters may have a set of pre-selected choices. A pointer value is given in the format **P.xx.yy**, where **xx** = parameter group, **yy** = parameter index. Example: Motor current signal, *01.05* CURRENT PERC, is connected to analogue output AO1 by setting parameter *15.01* AO1 PTR to value P.01.05.
WP	Write protected parameter (ie, read only)
WPD	Write protected parameter while drive is running
WP0	Parameter can only be set to zero.

Setting parameters

Parameters can be set via the drive control panel (keypad), DriveStudio or the fieldbus interface. All parameter settings are stored automatically to the permanent memory of the drive. However, it is highly recommended to force a save by using parameter *16.05* PARAM SAVE before powering down the drive immediately after any parameter changes. Values are restored after the power switch-off. If necessary, the default values can be restored by parameter *16.04* PARAM RESTORE.

Parameter groups 01…09

No.	Bit/Name/Value/ Range	Description	Def/Type FbEq (16b/32b)
01 ACTUAL VALUES		Basic signals for monitoring the drive. All signals in this group are read-only, unless otherwise specified.	
01.01	SPEED ACT	Shows the filtered actual speed. Used speed feedback is defined by parameter *22.01* SPEED FB SEL. Filter time constant can be adjusted by parameter *22.02* SPEED ACT FTIME.	- / *Real*
	-30000.00… 30000.00 rpm	Actual speed in rpm.	- / 100 = 1 rpm
01.02	SPEED ACT PERC	Shows the actual speed in percent of motor synchronous speed.	- / *Real*
	-1000.00… 1000.00%	Actual speed in percent.	- / 100 = 1%
01.03	FREQUENCY	Shows the estimated drive output frequency.	- / *Real*
	-30000.00… 30000.00 Hz	Output frequency in Hz.	- / 100 = 1 Hz
01.04	CURRENT	Shows the measured motor current.	- / *Real*
	0.00…30000.00 A	Motor current in A.	- / 100 = 1 A
01.05	CURRENT PERC	Shows the motor current in percent of nominal motor current.	- / *Real*
	0.0…1000.0%	Motor current in percent	10 = 1%/ -
01.06	TORQUE	Shows motor torque in percent of motor nominal torque.	- / *Real*
	-1600.0…1600.0%	Motor torque in percent	10 = 1%/ -
01.07	DC-VOLTAGE	Shows the measured intermediate circuit voltage.	- / *Real*
	0.00…2000.00	Intermediate circuit voltage	- / 100 = 1 V
01.08	ENCODER SPEED	Shows the encoder speed.	- / *Real*
	-32768.00... 32768.00 rpm	Encoder speed in rpm.	- / 100 = 1 rpm
01.09	ENCODER POS	Shows the actual position of encoder within one revolution.	- / *Real24*
	0.00000000... 1.00000000 rev	Encoder position within one revolution.	- / 100000000 = 1 rev

No.	Bit/Name/Value/ Range	Description	Def/Type FbEq (16b/32b)
01.10	POS ACT	Shows the actual position of the encoder.	- / *Real*
	-51445.760... 51445.760 m	Encoder position.	- / 1000 = 1 m
01.11	SPEED ESTIMATED	Shows the estimated motor speed.	- / *Real*
	-30000.00... 30000.00 rpm	Motor speed in rpm.	- / 100 = 1 rpm
01.12	TEMP INVERTER	Shows the measured temperature of heatsink in percent of maximum allowed temperature.	- / *Real24*
	-40.0...160.0 %	Heatsink temperature in percent of maximum allowed temperature.	10 = 1 % / -
01.13	TEMP BC	Shows the brake chopper IGBT temperature in percent of maximum allowed temperature.	- / *Real24*
	-40.0...160.0 %	Brake chopper IGBT temperature in percent of maximum allowed temperature.	10 = 1 % / -
01.14	MOTOR TEMP	Shows the measured motor temperature when a KTY sensor is used. **Note**: With a PTC sensor, the value is always 0.	- / *Real*
	-10.0...250 °C	Measured motor temperature in Celsius	10 = 1 °C / -
01.15	USED SUPPLY VOLT	Shows the automatically determined supply voltage.	- / *Real*
	0.0...1000.0 V	Used supply voltage.	10 = 1 V / -
01.16	BRAKE RES TEMP	Shows the estimated temperature of the brake resistor. The value is given in percent of temperature the resistor reaches when loaded with the power defined by parameter *48.03* BR POWER MAX CNT.	- / *Real24*
	0...1000%	Brake resistor temperature in percent.	1 = 1% / -
01.17	CPU USAGE	Shows the microprocessor load in percent.	- / *UINT32*
	0...100%	CPU usage.	1 = 1%/ -
01.18	INVERTER POWER	Shows the drive output power.	- / *Real*
	-32768.00... 32768.00 kW	Drive output power in kilowatts.	- / 100 = 1 kW
01.19	ON TIME COUNTER	Counts the time the drive is powered On. The counter runs only when drive is powered. The value is protected against power failure. The counter can be reset using the DriveStudio tool. The counter can only be set to zero.	- / *INT32*
	0.0... 35791394.1 h	Drive power On time in hours.	- / 10 = 1 h

No.	Bit/Name/Value/ Range	Description	Def/Type FbEq (16b/32b)
01.20	RUN TIME COUNTER	Counts the running time of the motor. The counter runs only when drive modulates. The value is protected against power failure. The counter can be reset using the DriveStudio tool. The counter can only be set to zero.	- / *INT32*
	0.0... 35791394.1 h	Motor run time in hours.	- / 100 = 1 h
01.21	FAN ON-TIME	Counts the running time of the drive cooling fan. The counter can be reset by entering 0. The value is protected against power failure. The counter can only be set to zero.	- / *INT32*
	0.0... 35791394.1 h	Cooling fan run time in hours.	- / 100 = 1 h
01.22	TEMP INT BOARD	Shows the measured temperature of the interface board.	- / *Real24*
	-40.0...160 °C	Interface board temperature in Celsius	10 = 1 °C / -
01.23	SPEED FILT	Shows the filtered motor speed. Filtering time = 250 ms.	- / *Real*
	-30000.0... 30000.0 rpm	Filtered motor speed in rpm.	- / 10 = 1 rpm
01.24	TORQUE FILT	Shows the filtered motor torque. Filtering time = 100 ms.	- / *Real*
	-1600.0... 1600.0%	Filtered motor torque in percent.	10 = 1% / -
01.25	FAN START COUNT	Shows the number of times drive fan was started.	- / *Real*
	0...2147483647	Drive fan start count.	1 = 1
01.26	TORQ MAX LIM	Shows the active torque limit.	- / *Real*
	0...1600%	Active torque limit in percent.	1 = 1% / -

No.	Bit/Name/Value/ Range	Description	Def/Type FbEq (16b/32b)
02 I/O VALUES		Input and output signals of the drive. All parameters in this group are read-only.	
02.01	DI STATUS	Status word of the digital inputs. Example: 000001 = DI1 is On, DI2 to DI6 are Off.	- / *Pb*

Bit	Name	Value	Information
0	DI1	1	Digital input DI1 is On.
		0	Digital input DI1 is Off.
1	DI2	1	Digital input DI2 is On.
		0	Digital input DI2 is Off.
2	DI3	1	Digital input DI3 is On.
		0	Digital input DI3 is Off.
3	DI4	1	Digital input DI4 is On.
		0	Digital input DI4 is Off.
4	DI5	1	Digital input DI5 is On.
		0	Digital input DI5 is Off.
5	DI6	1	Digital input DI6 is On.
		0	Digital input DI6 is Off.
6	NOT USED		

	0b000000... 0b111111	Digital inputs status word	1 = 1 / -
02.02	RO STATUS	Status of the relay output.	- / *Pb*

Bit	Name	Value	Information
0	RO1	1	Relay output RO1 is energized.
		0	Relay output RO1 is de-energized.
1	RESERVED		
3	NOT USED		

	0b000...0b111	Relay outputs status word	1 = 1 / -

No.	Bit/Name/Value/ Range	Description	Def/Type FbEq (16b/32b)
02.03	DIO STATUS	Status word of digital inputs/outputs DIO1…3. Example: 001 = DIO1 is On, DIO2 and DIO3 are Off.	- / *Pb*

Bit	Name	Value	Information
0	DIO1	1	Digital input/output DIO1 is On.
		0	Digital input/output DIO1 is Off.
1	DIO2	1	Digital input/output DIO2 is On.
		0	Digital input/output DIO2 is Off.
2	DIO3	1	Digital input/output DIO3 is On.
		0	Digital input/output DIO3 is Off.
3	NOT USED		

	0b000...0b111	Digital input output status word	1 = 1 / -
02.04	AI1	Shows the value of analog input AI1. The type is selected with jumper J1 on the JCU control unit.	- / *Real*
	-11.000... 11.000 V	Analog input AI1 value in V or mA.	1000 = 1 V /mA / -
02.05	AI1 SCALED	Shows the scaled value of analog input AI1. See parameters *13.04* AI1 MAX SCALE and *13.05* AI1 MIN SCALE.	- / *Real*
	-32768.000... 32768.000	Analog input AI1 scaled value.	- / 1000 = 1
02.06	AI2	Shows the analog input AI2 value. The type is selected with jumper J2 on the JCU control unit.	- / *Real*
	-11.000... 11.000 V	Analog input AI2 value in V or mA.	1000 = 1 V /mA / -
02.07	AI2 SCALED	Shows the scaled value of analog input AI2. See parameters *13.09* AI2 MAX SCALE and *13.10* AI2 MIN SCALE.	- / *Real*
	-32768.000... 32768.000	Analog input AI2 scaled value.	- / 1000 = 1
02.08	AO1	Shows the value of analog output AO1.	- / *Real*
	0.000... 22.700 mA	Analog output AO1 value in mA.	1000 = 1 mA / -
02.09	AO2	Shows the value of analog output AO2.	- / *Real*
	-10.000... 10.000 V	Analog output AO2 value in V.	1000 = 1 V / -

No.	Bit/Name/Value/ Range	Description	Def/Type FbEq (16b/32b)
02.10	FBA MAIN CW	Control Word for fieldbus communication. Log. = Logical combination (ie, Bit AND/OR Selection parameter). Par. = Selection parameter.	- / *Pb*

Bit	Name	Value	Information	Log.	Par.
0	STOP*	1	Stop according to the stop mode selected by parameters *10.02* UP COMMAND or *10.03* DOWN COMMAND or according to the requested stop mode (bits 2…6). **Note:** Simultaneous stop and start commands result in a stop command.	OR	*10.02*, *10.03*
		0	No action.		
1	START	1	Start. **Note:** Simultaneous stop and start commands result in a stop command.	OR	*10.02*, *10.03*
		0	No action.		
2	STPMODE EM OFF*	1	Emergency OFF2 (bit 0 must be 1): Drive is stopped by cutting off the motor power supply (the inverter IGBTs are blocked). The motor coasts to stop. The drive will restart only with the next rising edge of the start signal when the Run enable signal is on.	AND	–
		0	No action.		
3	STPMODE EM STOP*	1	Emergency stop OFF3 (bit 0 must be 1). Stop within the time defined by *22.06* EM STOP TIME.	AND	–
		0	No action.		
4	STPMODE OFF1*	1	Emergency stop OFF1 (bit 0 must be 1). Stop along the currently active deceleration ramp.	AND	*10.05*
		0	No action.		
5	STPMODE RAMP*	1	Stop along the currently active deceleration ramp.	–	
		0	No action.		
6	STPMODE COAST*	1	Coast to stop.	–	
		0	No action.		
7	RUN ENABLE	1	Activate Run enable.	AND	–
		0	Activate Run disable.		
8	RESET	0 -> 1	Fault reset if an active fault exists.	OR	–
		other	No action.		

(continued)

* If all stop mode bits 2…6 are 0, stop mode is ramp. Coast stop (bit 6) overrides the emergency stop (bits 2/3/4). Emergency stop overrides the normal ramp stop (bit 5).

No.	Bit/Name/Value/ Range	Description	Def/Type FbEq (16b/32b)
02.10	FBA MAIN CW	Control Word for fieldbus communication.	- / *Pb*

Bit	Name	Value	Information	Log.	Par.
(continued)					
9	JOGGING 1**	1	Activate jogging function 1.	OR	–
		0	Jogging function 1 disabled.		
10	JOGGING 2**	1	Activate jogging function 2.	OR	–
		0	Jogging function 2 disabled.		
11	REMOTE CMD	1	Fieldbus control enabled.	–	–
		0	Fieldbus control disabled.		
12	RAMP OUT 0	1	Force output of Ramp Function Generator to zero. The drive ramps to a stop (current and DC voltage limits are in force).	–	–
		0	No action.		
13	RAMP HOLD	1	Halt ramping (Ramp Function Generator output held).	–	–
		0	No action.		
14	RAMP IN 0	1	Force Ramp Function Generator input to zero.	–	–
		0	No action.		
15	RESERVED				
16	REQ STARTINH	1	Activate start inhibit.	–	–
		0	No start inhibit.		
17	LOCAL CTL	1	Request local control for Control Word. Used when the drive is controlled via PC tool or panel or through local fieldbus. • Local fieldbus: Transfer to fieldbus local control (control via fieldbus Control Word or reference). Fieldbus steals the control. • Panel or PC tool: Transfer to local control.	–	–
		0	Request external control.		
18	FBLOCAL REF	1	Request fieldbus local control.	–	–
		0	No fieldbus local control.		
19...26	RESERVED				
27	NOT USED				
28...31	CW B28...B31	Freely programmable control bits.			

** Internally used for evacuation and inspection mode operation.

	0x0000000...0xFFFFFFF	Fieldbus control word.	1 = 1

No.	Bit/Name/Value/ Range	Description	Def/Type FbEq (16b/32b)
02.11	FBA MAIN SW	Status Word for fieldbus communication.	- / *Pb*

Bit	Name	Value	Information
0	READY	1	Drive is ready to receive start command.
		0	Drive is not ready.
1	ENABLED	1	External run enable signal is received.
		0	No external run enable signal is received.
2	RUNNING	1	Drive is modulating.
		0	Drive is not modulating.
3	REF RUNNING	1	Normal operation is enabled. Drive is running and following given reference.
		0	Normal operation is disabled. Drive is not following given reference (for example, modulating during magnetization).
4	EM OFF (OFF2)	1	Emergency OFF2 is active.
		0	Emergency OFF2 is inactive.
5	EM STOP (OFF3)	1	Emergency stop OFF3 (ramp stop) is active.
		0	Emergency stop OFF3 is inactive.
6	ACK STARTINH	1	Start inhibit is active.
		0	Start inhibit is inactive.
7	ALARM	1	An alarm is active. See chapter *Fault tracing*.
		0	No alarm is active.
8	AT SETPOINT	1	Drive is at setpoint.
		0	Drive has not reached setpoint.
9	LIMIT	1	Operation is limited by torque limit (any torque limit).
		0	Operation is within torque limits.
10... 11	RESERVED		
12	LOCAL FB	1	Fieldbus local control is active.
		0	Fieldbus local control is inactive.
13	ZERO SPEED	1	Drive speed reached zero speed.
		0	Drive has not reached zero speed limit.
(continued)			

No.	Bit/Name/Value/ Range	Description	Def/Type FbEq (16b/32b)
02.11	FBA MAIN SW	Status Word for fieldbus communication.	- / *Pb*

Bit	Name	Value	Information
(continued)			
14	REV ACT	1	Drive is running in reverse direction.
		0	Drive is running in forward direction.
15	RESERVED		
16	FAULT	1	Fault is active. See chapter *Fault tracing*.
		0	No fault is active.
17	LOCAL PANEL	1	Local control is active, ie, drive is controlled from PC tool or control panel.
		0	Local control is inactive.
18... 26	RESERVED		
27	REQUEST CTL	1	Control word is requested from fieldbus.
		0	Control word is not requested from fieldbus.
28... 31	SW B28... SW B31	Programmable status bits (unless fixed by the used profile). See parameters *50.08*…*50.11* and the *user's manual* of the fieldbus adapter.	

	0x00000000... 0xFFFFFFFF	Fieldbus main status word.	1 = 1
02.12	FBA MAIN REF1	Scaled fieldbus reference 1. See parameter *50.04* FBA REF1 MODESEL.	0/ *INT32*
	-2147483647... 2147483647	Scaled fieldbus reference 1.	- / 1 = 1
02.13	FBA MAIN REF2	Scaled fieldbus reference 2. See parameter *50.05* FBA REF2 MODESEL.	0/ *INT32*
	-2147483647... 2147483647	Scaled fieldbus reference 2.	- / 1 = 1
02.14	FEN DI STATUS	Status of digital inputs of FEN-xx encoder interfaces in drive option Slots 1 and 2. Examples: 000001 (01h) = DI1 of FEN-xx in Slot 1 is ON, all others are OFF. 000010 (02h) = DI2 of FEN-xx in Slot 1 is ON, all others are OFF. 010000 (10h) = DI1 of FEN-xx in Slot 2 is ON, all others are OFF. 100000 (20h) = DI2 of FEN-xx in Slot 2 is ON, all others are OFF.	- / *Pb*
	0b000000... 0b111111	FEN-xx digital input status.	1 = 1/ -

No.	Bit/Name/Value/ Range	Description	Def/Type FbEq (16b/32b)
02.15	EFB MAIN CW	Internal Control Word of the drive received through the embedded fieldbus interface. Log. = Logical combination (i.e. Bit AND/OR Selection parameter); Par. = Selection parameter.	- / *Pb*

Bit	Name	Value	Information	Log.	Par.
0	STOP*	1	Stop according to the Stop mode selected by parameters *10.02* UP COMMAND or *10.03* DOWN COMMAND or according to the requested stop mode (bits 2…6). **Note:** Simultaneous stop and start commands result in a stop command.	OR	*10.02*, *10.03*
		0	No action.		
1	START	1	Start. **Note:** Simultaneous stop and start commands result in a stop command.	OR	*10.02*, *10.03*
		0	No action.		
2	STPMODE EM OFF*	1	Emergency OFF2 (bit 0 must be 1): Drive is stopped by cutting off the motor power supply (the inverter IGBTs are blocked). The motor coasts to stop. The drive will restart only with the next rising edge of the start signal when the Run enable signal is on.	AND	–
		0	No action.		
3	STPMODE EM STOP*	1	Emergency stop OFF3 (bit 0 must be 1). Stop within the time defined by *22.06* EM STOP TIME.	AND	–
		0	No action.		
4	STPMODE OFF1*	1	Emergency stop OFF1 (bit 0 must be 1). Stop along the currently active deceleration ramp.	AND	*10.05*
		0	No action.		
5	STPMODE RAMP*	1	Stop along the currently active deceleration ramp.	–	
		0	No action.		
6	STPMODE COAST*	1	Coast to stop.	–	
		0	No action.		
7	RUN ENABLE	1	Activate Run enable.	AND	–
		0	Activate Run disable.		
8	RESET	0 -> 1	Fault reset if an active fault exists.	OR	–
		other	No action.		

(continued)

* If all stop mode bits 2…6 are 0, stop mode is ramp. Coast stop (bit 6) overrides the emergency stop (bits 2/3/4). Emergency stop overrides the normal ramp stop (bit 5).

No.	Bit/Name/Value/Range	Description	Def/Type FbEq (16b/32b)
02.15	EFB MAIN CW	Internal Control Word of the drive received through the embedded fieldbus interface.	- / *Pb*

Bit	Name	Value	Information	Log.	Par.
(continued)					
9	JOGGING 1**	1	Activate jogging function 1.	OR	–
		0	Jogging function 1 disabled.		
10	JOGGING 2**	1	Activate jogging function 2.	OR	–
		0	Jogging function 2 disabled.		
11	REMOTE CMD	1	Embedded fieldbus control enabled.	–	–
		0	Embedded fieldbus control disabled.		
12	RAMP OUT 0	1	Force output of Ramp Function Generator to zero. The drive ramps to a stop (current and DC voltage limits are in force).	–	–
		0	No action.		
13	RAMP HOLD	1	Halt ramping (Ramp Function Generator output held).	–	–
		0	No action.		
14	RAMP IN 0	1	Force Ramp Function Generator input to zero.	–	–
		0	No action.		
15	RESERVED				
16	REQ STARTINH	1	Activate start inhibit.	–	–
		0	No start inhibit.		
17	LOCAL CTL	1	Request local control for Control Word. Used when the drive is controlled through PC tool or panel or through local fieldbus. • Local fieldbus: Transfer to fieldbus local control (control through embedded fieldbus Control Word or reference). Embedded fieldbus steals the control. • Panel or PC tool: Transfer to local control.	–	–
		0	Request external control.		
18	FBLOCAL REF	1	Request fieldbus local control.	–	–
		0	No fieldbus local control.		
19...26	RESERVED				
27	NOT USED				
28...31	CW B28...B31		Freely programmable control bits.		

** Internally used for evacuation and inspection mode operation.

	0x00000000...0xFFFFFFFF	Embedded fieldbus control word.	1 = 1

No.	Bit/Name/Value/ Range	Description	Def/Type FbEq (16b/32b)
02.16	EFB MAIN SW	Status Word for embedded fieldbus communication.	- / *Pb*

Bit	Name	Value	Information
0	READY	1	Drive is ready to receive start command.
		0	Drive is not ready.
1	ENABLED	1	External run enable signal is received.
		0	No external run enable signal is received.
2	RUNNING	1	Drive is modulating.
		0	Drive is not modulating.
3	REF RUNNING	1	Normal operation is enabled. Drive is running and following given reference.
		0	Normal operation is disabled. Drive is not following given reference (for example, modulating during magnetization).
4	EM OFF (OFF2)	1	Emergency OFF2 is active.
		0	Emergency OFF2 is inactive.
5	EM STOP (OFF3)	1	Emergency stop OFF3 (ramp stop) is active.
		0	Emergency stop OFF3 is inactive.
6	ACK STARTINH	1	Start inhibit is active.
		0	Start inhibit is inactive.
7	ALARM	1	An alarm is active. See chapter *Fault tracing*.
		0	No alarm is active.
8	AT SETPOINT	1	Drive is at setpoint.
		0	Drive has not reached setpoint.
9	LIMIT	1	Operation is limited by torque limit (any torque limit).
		0	Operation is within torque limits.
10... 11	RESERVED		
12	LOCAL FB	1	Embedded fieldbus local control is active.
		0	Embedded fieldbus local control is inactive.
13	ZERO SPEED	1	Drive speed reached zero speed.
		0	Drive has not reached zero speed limit.
(continued)			

No.	Bit/Name/Value/ Range	Description	Def/Type FbEq (16b/32b)
02.16	EFB MAIN SW	Status Word for embedded fieldbus communication.	- / *Pb*

Bit	Name	Value	Information
(continued)			
14	REV ACT	1	Drive is running in reverse direction.
		0	Drive is running in forward direction.
15	RESERVED		
16	FAULT	1	Fault is active. See chapter *Fault tracing*.
		0	No fault is active.
17	LOCAL PANEL	1	Local control is active, ie, drive is controlled from PC tool or control panel.
		0	Local control is inactive.
18...26	RESERVED		
27	REQUEST CTL	1	Control word is requested from fieldbus.
		0	Control word is not requested from fieldbus.
28...31	SW B28...B31	Programmable status bits (unless fixed by the used profile). See parameters *50.08*…*50.11* and the *user's manual* of the fieldbus adapter.	

	0x00000000...0xFFFFFFFF	Fieldbus main status word.	1 = 1
02.17	EFB MAIN REF1	Embedded fieldbus reference 1.	0/ *Real*
	-2147483647...2147483647	Embedded fieldbus reference 1.	1 = 1
02.18	EFB MAIN REF2	Embedded fieldbus reference 2.	0/ *Real*
	-2147483647...2147483647	Embedded fieldbus reference 2.	1 = 1
02.80	EXT DIO STATUS	Status of the extended digital inputs/outputs EXT DIO1…DIO4. Example: 0000001001 = DIO1 and DIO4 are on, DIO2 and DIO3 are Off. **Note:** If an FIO-01 extension is installed, the status of its digital input/output is indicated by this signal.	- / *Pb*
	0x0000...0xFFFF	Extended digital inputs/outputs status.	1 = 1
02.81	EXT RO STATUS	Status of the extended relay outputs. 1 = EXT RO is energized. Example: 010 = EXT RO2 is energized. **Note:** If an FIO-01 extension is installed, the status of its relay outputs is indicated by this signal.	- / *Pb*
	0x0000...0xFFFF	Extended digital inputs/outputs status.	1 = 1

No.	Bit/Name/Value/ Range	Description	Def/Type FbEq (16b/32b)
03 CONTROL VALUES		Speed control, torque control, and other values.	
03.01	SPEEDREF INT	Shows the internal speed reference in rpm.	0.00 rpm/ *Real*
	-30000.00... 30000.00 rpm	Internal speed reference in rpm.	100 = 1 rpm
03.02	SPEEDREF EXT	Shows the external speed reference.	0.00 rpm/ *Real*
	-30000.00... 30000.00 rpm	External speed reference in rpm.	100 = 1 rpm
03.03	SPEEDREF ACT	Shows the actual speed reference.	0.00 rpm/ *Real*
	-30000.00... 30000.00 rpm	Actual speed reference in rpm.	100 = 1 rpm
03.04	SPEED ERROR FILT	Shows the filtered speed value. This value is the difference between actual speed reference (par *03.03*) and the internal speed reference (par *03.01*).	0.00 rpm/ *Real*
	-30000.00... 30000.00 rpm	Filtered speed in rpm.	- / 100 = 1 rpm
03.05	BRAKE TORQ MEM	Shows the torque value stored when the mechanical brake close command is issued.	0.0%/ *Real*
	-1000.0... 1000.0%	Stored torque value in percent.	10 = 1%
03.06	BRAKE COMMAND	Shows the status of brake on/off command. 0 = Close. 1 = Open. For brake on/off control, connect this signal to a relay output (or a digital output). See section *Mechanical brake control* on page *149*.	Close/ *enum*
	Close	Brake is closed.	0
	Open	Brake is open.	1
03.07	MOT CONTACT CTRL	For motor contactor control, connect this signal to a relay output or a digital output.	Open/ *enum*
	Open	Motor contactor control value is open.	0
	Close	Motor contactor control value is closed.	1
03.08	SPEEDREF RAMP IN	Shows the used speed reference ramp input.	0.00 rpm/ *Real*
	-30000.00... 30000.00 rpm	Used speed reference in rpm.	100 = 1 rpm

No.	Bit/Name/Value/ Range	Description	Def/Type FbEq (16b/32b)
03.09	ACC COMP TORQ	Shows the output of the acceleration compensation torque.	0.0%/ *Real*
	-1600.0... 1600.0%	Acceleration compensation torque in percent.	10 = 1%/ -

05 LIFT CTRL VALUES		Signals for monitoring the lift control functions.	
05.01	LIFT SW	Lift control status word.	- / *Pb*

Bit	Name	Value	Information
0	SPEED1 ACT	1	Speed1 (parameter *80.10*) is the current speed reference used by the lift.
		0	Speed1 (parameter *80.10*) is not the current speed reference used by the lift.
1	LEVELING ACT	1	Leveling speed (parameter *80.11*) is the current speed reference used by the lift.
		0	Leveling speed (parameter *80.11*) is not the current speed reference used by the lift.
2	RELEVELING ACT	1	Releveling speed (parameter *80.13*) is the current speed reference used by the lift.
		0	Releveling speed (parameter *80.13*) is not the current speed reference used by the lift.
3	MEDIUM SPD ACT	1	Medium speed (parameter *80.14*) is the current speed reference used by the lift.
		0	Medium speed (parameter *80.14*) is not the current speed reference used by the lift.
4	NOMINAL SPD ACT	1	Nominal speed (parameter *72.01*) is the current speed reference used by the lift.
		0	Nominal speed (parameter *72.01*) is not the current speed reference used by the lift.
5	INSPECT SPD ACT	1	Inspection speed (parameter *80.15*) is the current speed reference used by the lift.
		0	Inspection speed (parameter *80.15*) is not the current speed reference used by the lift.
6	BRK SLIP ALARM	1	Brake is slipping while the motor is not running.
		0	Brake is not slipping (No BRAKE SLIP alarm active).
7	EVAC SPD ACT	1	Evacuation speed (parameter *80.16*) is the current speed reference used by the lift.
		0	Evacuation speed (parameter *80.16*) is not the current speed reference used by the lift.
(continued)			

No.	Bit/Name/Value/ Range	Description	Def/Type FbEq (16b/32b)

Bit	Name	Value	Information
(continued)			
8	SPEED2 ACT	1	Speed2 (parameter *80.17*) is the current speed reference used by the lift.
		0	Speed 2 (parameter *80.17*) is not the current speed reference used by the lift.
9	SPEED3 ACT	1	Speed3 (parameter *80.18*) is the current speed reference used by the lift.
		0	Speed3 (parameter *80.18*) is not the current speed reference used by the lift.
10	RDY CLS SPLYCONT	1	Ready to close the supply contactor. Safe torque off function is inactive.
		0	Not ready to close the supply contactor. Safe torque off function is active.
11	INSPECT MODE SEL	1	Inspection mode is activated with parameter *10.84* INSPECTION MODE.
		0	Inspection mode is not active.
12	EVAC MODE ACT	1	Evacuation mode is activated with parameter *10.81* EVACUATION MODE.
		0	Evacuation mode is not active.
13	TORQ PRV OK	1	Torque proving is successful.
		0	Torque proving was not successful during previous start attempt.
14	JOGGING ACTIVE	1	Drive jogging mode is active.
		0	Drive jogging mode is not active.
15	LVL TIME OVER	1	Leveling overtime stop function is activated during the last run.
		0	Leveling overtime stop function is not active.

0x0000...0xFFFF	Lift control status word.	1 = 1

No.	Bit/Name/Value/ Range	Description	Def/Type FbEq (16b/32b)
05.02	LIFT FW	Lift fault status word with fault bits.	- / *Pb*

Bit	Name	Value	Information
0	SPEED MATCH	1	The speed error is higher than defined with parameter *81.02* SPD STD DEV LVL in the steady state or defined with parameter *81.03* SPD RMP DEV LVL in the ramp state, and the time delay defined with parameter *81.04* SPEED MATCH DLY has elapsed.
		0	The speed error is within the defined limits (no SPEED MATCH fault active).
1	TORQUE PROVE	1	The drive was not able to provide sufficient torque during a torque proving sequence.
		0	Torque proving successfully accomplished or torque proving disabled (no TORQUE PROVE fault active).
2	BRAKE SLIP	1	The brake slipped while a torque proving sequence was taking place.
		0	No brake slip detected during torque proving (no BRAKE SLIP fault active).
3	MOTOR STALL	1	*81.07*STALL SPEED LIM,and the time period defined with parameter *81.08* STALL FAULT DLY has elapsed.
		0	No MOTOR STALL fault active.
	NOT USED		
9	OVERCURRENT	1	Output current has exceeded the internal limit.
		0	Output current is within the internal limit.
10	OVERVOLTAGE	1	Excessive intermediate circuit DC voltage.
		0	Intermediate circuit DC voltage is sufficient.
11	UNDERVOLTAGE	1	Intermediate circuit DC voltage is not sufficient.
		0	Intermediate circuit DC voltage is sufficient.
12	EXTERNAL FAULT	1	Fault in the external device.
		0	No fault in the external device.
13	NOT USED		

	0x0000...0xFFFF	Lift fault status word with fault bits.	1 = 1
05.03	LIFT SPEED SEL		- / *Real*
	-32768.00... 32768.00 m/s	Lift speed reference.	-/ 100 = 1 m/s

No.	Bit/Name/Value/ Range	Description	Def/Type FbEq (16b/32b)
05.04	LIFT SPEED ACT	Shows the actual lift speed in m/s.	- / *Real*
	-32768.00... 32768.00 m/s	Actual life speed.	- /100 = 1 m/s
05.05	LIFT SPEED REF	Shows the ramped and shaped speed reference in m/s.	- / *Real*
	-32768.00... 32768.00 m/s	Lift speed reference.	- /100 = 1 m/s
05.06	LVL DISTANCE ACT	Shows the distance traveled by the lift during leveling.	- / *Real*
	-32768.00... 32768.00 m	Actual distance traveled by the lift.	- / 100 = 1 m
05.07	FLOOR DISTANCE	Shows the distance between two floors.	- / *Real*
	-32768.00... 32768.00 m	Distance between two floors	- / 100 = 1 m
05.08	EVACUATION DIR	Shows the direction of the lighter load measured during automatic evacuation.	- / *enum*
	DOWN	Evacuation is towards downward direction.	0
	UP	Evacuation is towards upward direction.	1
05.09	START UP COUNT	Shows the number of times the drive was switched on i.e power on/off.	- / *Real*
	0...2147483647	Drive power on count.	1 = 1
05.10	TRIP COUNT	Shows the number of times the lift started/travelled between floors.	- / *Real*
	0...2147483647	Lift start up count.	1 = 1
05.11	PEAK CURRENT ACC	Shows the peak current acceleration.	- / *Real*
	-32768.0... 32768.0 A	Peak current acceleration.	10 = 1 A
05.12	PEAK CURRENT DEC	Shows the peak current deceleration.	- / *Real*
	-32768.0... 32768.0 A	Peak current deceleration.	10 = 1 A
05.13	RESET COUNTER	Resets the lift counters for start up count and trip count.	DONE / *enum*
	DONE	Lift counters reset is done.	0
	START UP CNT	Start up counter in parameter *05.09* START UP COUNT is reset.	1
	TRIP COUNTER	Start up counter in parameter *05.10* TRIP COUNT is reset.	2

No.	Bit/Name/Value/ Range	Description	Def/Type FbEq (16b/32b)
06 DRIVE STATUS		Drive status words.	
06.01	STATUS WORD 1	Drive status word 1.	-/ *Pb*

Bit	Name	Value	Information
0	READY	1	Drive is ready to receive start command.
		0	Drive is not ready.
1	ENABLED	1	External run enable signal is received.
		0	No external run enable signal is received.
2	STARTED	1	Drive has received start command.
		0	Drive has not received start command.
3	RUNNING	1	Drive is modulating.
		0	Drive is not modulating.
4	EM OFF (OFF2)	1	Emergency OFF2 is active.
		0	Emergency OFF2 is inactive.
5	EM STOP (OFF3)	1	Emergency stop OFF3 (ramp stop) is active.
		0	Emergency stop OFF3 is inactive.
6	ACK STARTINH	1	Start inhibit is active.
		0	Start inhibit is inactive.
7	ALARM	1	An alarm is active. See chapter *Fault tracing*
		0	No alarm.
8	RESERVED		
9	LOCAL FB	1	Fieldbus local control is active.
		0	Fieldbus local control is inactive.
10	FAULT	1	A fault is active. See chapter *Fault tracing*.
		0	No fault.
11	LOCAL PANEL	1	Local control is active, ie, drive is controlled from PC tool or control panel.
		0	Local control is inactive.
12	NOT FAULTED	1	No fault.
		0	A fault is active. See chapter *Fault tracing*.
13	BRAKE CHOP ACT	1	Brake chopper is modulating.
		0	Brake chopper is not modulating.
14...15	RESERVED		

0x0000...0xFFFF	Status word 1	1 = 1

No.	Bit/Name/Value/ Range	Description	Def/Type FbEq (16b/32b)
06.02	STATUS WORD 2	Drive status word 2.	-/ *Pb*

Bit	Name	Value	Information
0	START ACT	1	Drive start command is active.
		0	Drive start command is inactive.
1	STOP ACT	1	Drive stop command is active.
		0	Drive stop command is inactive.
2	READY RELAY	1	Ready to function: run enable signal on, no fault, emergency stop signal off, no ID run inhibition.
		0	Not ready to function.
3	MODULATING	1	Modulating: IGBTs are controlled, ie, the drive is RUNNING.
		0	No modulation: IGBTs are not controlled.
4	REF RUNNING	1	Normal operation is enabled. Running. Drive follows the given reference.
		0	Normal operation is disabled, Drive is not following the given reference (eg, in magnetisation phase drive is modulating).
5	JOGGING*	1	Jogging function 1 or 2 is active.
		0	Jogging function is inactive.
6	OFF1	1	Emergency stop OFF1 is active.
		0	Emergency stop OFF1 is inactive.
7	RESERVED		
8	START INH NOMASK	1	Non-maskable start inhibit is active.
		0	No start inhibit (non-maskable)
9	CHRG REL CLOSED	1	Charging relay is closed.
		0	Charging relay is open.
10	STO ACT	1	Safe torque off function is active. See parameter *46.05* STO DIAGNOSTIC.
		0	Safe torque off function is inactive.
11	RESERVED		
12	RAMP IN 0	1	Ramp Function Generator input is forced to zero.
		0	Normal operation.
13	RAMP HOLD	1	Ramp Function Generator output is held.
		0	Normal operation.
14	RAMP OUT 0	1	Ramp Function Generator output is forced to zero.
		0	Normal operation.
15	DATA LOGGER ON	1	The drive data logger is on and has not been triggered.
		0	The drive data logger is off, or its post-trigger time has not yet elapsed. See the *DriveStudio user's manual*.
* Internally used for evacuation and inspection mode operation.			

0x0000...0xFFFF	Status word 2	1 = 1

No.	Bit/Name/Value/ Range	Description	Def/Type FbEq (16b/32b)
06.03	SPEED CTRL STAT	Speed control status word.	-/ *Pb*

Bit	Name	Value	Information
0	SPEED ACT NEG	1	Actual speed is negative.
1	ZERO SPEED	1	Actual speed has reached the zero speed.
2	RESERVED		
3	AT SETPOINT	1	The difference between the actual speed and the unramped speed reference is within the speed window.
4	BAL ACTIVE	1	Speed controller output balancing is active.
5...15	RESERVED		

	0x0000...0xFFFF	Speed control status	1 = 1
06.04	LIMIT WORD 1	Limit word 1.	-/ *Pb*

Bit	Name	Value	Information
0	TORQ LIM	1	Drive torque is limited by motor control (undervoltage control, overvoltage control, current control, load angle control or pull-out control).
1	SPD CTL TLIM MIN	1	Speed controller output minimum torque limit is active.
2	SPD CTL TLIM MAX	1	Speed controller output maximum torque limit is active.
3...6	RESERVED		
7	SUPPL POWER LIM	1	Drive output power is limited due to missing supply phase.
8...15	RESERVED		

	0x0000...0xFFFF	Limit word 1	1 = 1

No.	Bit/Name/Value/ Range	Description	Def/Type FbEq (16b/32b)
06.05	TORQ LIM STATUS	Torque controller limitation status word	-/ *Pb*

Bit	Name	Value	Information
0	UNDERVOLTAGE	1	Intermediate circuit DC undervoltage. *
1	OVERVOLTAGE	1	Intermediate circuit DC overvoltage. *
2	MINIMUM TORQUE	1	Torque reference minimum limit is active.*
3	MAXIMUM TORQUE	1	Torque reference maximum limit is active.*
4	INTERNAL CURRENT	1	An inverter current limit is active. The limit is identified by bits 8…11.
5	LOAD ANGLE	1	For permanent magnet motor only: Load angle limit is active, ie, the motor cannot produce more torque.
6	MOTOR PULLOUT	1	For asynchronous motor only: Motor pull-out limit is active, ie, the motor cannot produce more torque.
7	RESERVED		
8	THERMAL	1	Bit 4 = 0: Input current is limited by main circuit thermal limit. Bit 4 = 1: Output current is limited by main circuit thermal limit.
9	I2MAX CURRENT	1	Inverter output current limit is active. **
10	USER CURRENT	1	Maximum inverter output current limit is active. The limit is defined by parameter *20.02* MAXIMUM CURRENT. **
11	THERMAL IGBT	1	Calculated thermal current value that limits the inverter output current.
12...15	RESERVED		

* Only one of the bits 0…3 can be On simultaneously. The bit typically indicates the limit that exceeds first.

** Only one of the bits 9…11 can be On simultaneously. The bit typically indicates the limit that exceeds first.

	0x0000...0xFFFF	Torque limit status.	1 = 1

08 ALARMS & FAULTS		Signals containing alarm and fault information.	
08.01	ACTIVE FAULT	Shows the fault code of the latest (active) fault.	-/ *enum*
	0...65535	Fault code	1 = 1 / -
08.02	LAST FAULT	Shows the fault code of the 2nd latest fault.	-/ *enum*
	0...2147483647	Fault code	1 = 1 / -

No.	Bit/Name/Value/ Range	Description	Def/Type FbEq (16b/32b)
08.03	FAULT TIME HI	Shows the time (real time or power-on time) at which the active fault occurred in format dd.mm.yy (=day.month.year).	-/ *INT32*
	0...2147483647 days	Number of days.	- / 1 = 1
08.04	FAULT TIME LO	Shows the time (real time or power-on time) at which the active fault occurred in format hh.mm.ss (hours.minutes.seconds).	-/ *INT32*
	00.00.00... 2147483647	Time (in hours.minutes.seconds)	- / 1 = 1
08.05	ALARM LOGGER 1	Alarm logger 1. For possible causes and remedies, see chapter *Fault tracing*.	-/ *Pb*

Bit	Alarm
0	BRAKE START TORQ
1	BRAKE NOT CLOSED
2	BRAKE NOT OPEN
3	SAFE TORQUE OFF
4	STO MODE CHANGE
5	MOTOR TEMP
6	EMERGENCY OFF
7	RUN ENABLE
8	MOTOR ID-RUN
9	EMERGENCY STOP
10	RESERVED
11	BR OVERHEAT
12	BC OVERHEAT
13	DEVICE OVERTEMP
14	INTBOARD OVERTEM
15	BC MOD OVERTEMP

	0x0000...0xFFFF	Alarm logger 1	1 = 1 / -

No.	Bit/Name/Value/ Range	Description	Def/Type FbEq (16b/32b)
08.06	ALARM LOGGER 2	Alarm logger 2. For possible causes and remedies, see chapter *Fault tracing*.	-/ *Pb*

Bit	Alarm
0	IGBT OVERTEMP
1	FIELDBUS COMM
2	RESERVED
3	AI SUPERVISION
4	RESERVED
5	NO MOTOR DATA
6	ENCODER FAIL
7...9	RESERVED
10	ENC EMUL FAILURE
11	FEN TEMP FAILURE
12	ENC MAX FREQ
13	ENC REF ERROR
14	RESOLVER ERROR
15	ENCODER CABLE

	0x0000...0xFFFF	Alarm logger 2	1 = 1/ -
08.07	ALARM LOGGER 3	Alarm logger 3. For possible causes and remedies, see chapter *Fault tracing*.	-/ *Pb*

Bit	Alarm
0...2	RESERVED
3	PS COMM
4	RESTORE
5	CUR MEAS CALIB
6	AUTOPHASING
7	EARTH FAULT
8	RESERVED
9	MOTOR NOM VALUE
10	RESERVED
11	STALL
12...14	RESERVED
15	SPEED FEEDBACK

	0x0000...0xFFFF	Alarm logger 3	1 = 1 / -

No.	Bit/Name/Value/ Range	Description	Def/Type FbEq (16b/32b)
08.08	ALARM LOGGER 4	Alarm logger 4. For possible causes and remedies, see chapter *Fault tracing*.	-/ *Pb*

Bit	Alarm
0	OPTION COMM LOSS
1	SOLUTION ALARM
2...5	RESERVED
6	PROT. SET PASS
7...8	RESERVED
9	DC NOT CHARGED
10...15	RESERVED

	0x0000...0xFFFF	Alarm logger 4	1 = 1 / -
08.09	ALARM LOGGER 5	Alarm logger 5. For possible causes and remedies, see chapter *Fault tracing*.	-/ *Pb*

Bit	Alarm
0...15	RESERVED

	0x0000...0xFFFF	Alarm logger 5	1 = 1 / -
08.10	ALARM LOGGER 6	Alarm logger 6. For possible causes and remedies, see chapter *Fault tracing*.	-/ *Pb*

Bit	Alarm
0...1	RESERVED
2	LOW VOLT MOD CON
3...9	RESERVED
10	BR DATA
11	ENC NO POS OFFS
12	SUPPL PHS LOSS
13	PU LOST
14	RESERVED
15	AUTOTUNE

	0x0000...0xFFFF	Alarm logger 6	1 = 1 / -

No.	Bit/Name/Value/ Range	Description	Def/Type FbEq (16b/32b)
08.11	ALARM WORD 1	Alarm word 1. For possible causes and remedies, see chapter *Fault tracing*.	-/ *UINT32*

Bit	Alarm
0	BRAKE START TORQ
1	BRAKE NOT CLOSED
2	BRAKE NOT OPEN
3	SAFE TORQUE OFF
4	STO MODE CHANGE
5	MOTOR TEMP
6	EMERGENCY OFF
7	RUN ENABLE
8	MOTOR ID-RUN
9	EMERGENCY STOP
10	RESERVED
11	BR OVERHEAT
12	BC OVERHEAT
13	DEVICE OVERTEMP
14	INTBOARD OVERTEM
15	BC MOD OVERTEMP

	0x0000...0xFFFF	Alarm word 1	1 = 1 / -
08.12	ALARM WORD 2	Alarm word 2. For possible causes and remedies, see chapter *Fault tracing*.	-/ *UINT32*

Bit	Alarm
0	IGBT OVERTEMP
1	FIELDBUS COMM
2	RESERVED
3	AI SUPERVISION
4	RESERVED
5	NO MOTOR DATA
6	ENCODER FAIL
7...9	RESERVED
10	ENC EMUL FAILURE
11	FEN TEMP FAILURE
12	ENC MAX FREQ
13	ENC REF ERROR
14	RESOLVER ERROR
15	ENCODER CABLE

	0x0000...0xFFFF	Alarm word 2	1 = 1 / -

No.	Bit/Name/Value/ Range	Description	Def/Type FbEq (16b/32b)
08.13	ALARM WORD 3	Alarm word 3. For possible causes and remedies, see chapter *Fault tracing*.	-/ *UINT32*

Bit	Alarm
0...2	RESERVED
3	PS COMM
4	RESTORE
5	CUR MEAS CALIB
6	AUTOPHASING
7	EARTH FAULT
8	RESERVED
9	MOTOR NOM VALUE
10	RESERVED
11	STALL
12…14	RESERVED
15	SPEED FEEDBACK

	0x0000...0xFFFF	Alarm word 3	1 = 1 / -
08.14	ALARM WORD 4	Alarm word 4. For possible causes and remedies, see chapter *Fault tracing*.	-/ *UINT32*

Bit	Alarm
0	OPTION COMM LOSS
1	SOLUTION ALARM
2…5	RESERVED
6	PROT. SET PASS
7…8	RESERVED
9	DC NOT CHARGED
10…15	RESERVED

	0x0000...0xFFFF	Alarm word 4	1 = 1 / -
08.15	ALARM WORD 5	Alarm word 5. For possible causes and remedies, see chapter *Fault tracing*.	-/ *UINT32*

Bit	Alarm
0…15	RESERVED

	0x0000...0xFFFF	Alarm word 5	1 = 1 / -

No.	Bit/Name/Value/ Range	Description	Def/Type FbEq (16b/32b)
08.16	ALARM WORD 6	Alarm word 6. For possible causes and remedies, see chapter *Fault tracing*.	-/ *UINT32*

Bit	Alarm
0…1	RESERVED
2	LOW VOLT MOD CON
3…9	RESERVED
10	BR DATA
11	ENC NO POS OFFS
12	SUPPL PHS LOSS
13	PU LOST
14…15	RESERVED

	0x0000...0xFFFF	Alarm word 6	1 = 1 / -
09 SYSTEM INFO		Drive type, program revision and option slot occupation information.	
09.01	DRIVE TYPE	Shows the drive application type.	- / *INT32*
	0...65535	Inverter type	1 = 1
09.02	DRIVE RATING ID	Shows the inverter type of the drive. Value is drive dependent.	- / *INT32*
	0...65535	Inverter type	1 = 1
09.03	FIRMWARE ID	Shows the firmware name. Eg, UMFL.	- / *Pb* 1 = 1
09.04	FIRMWARE VER	Shows the version of the firmware package in the drive, eg, 0x1510.	- / *Pb* 1 = 1
09.05	FIRMWARE PATCH	Shows the version of the firmware patch in the drive.	-/ *Pb* 1 = 1
	0...4294967295	Firmware patch version	1 = 1
09.10	INT LOGIC VER	Shows the version of the logic in the power unit interface.	-/ *Pb* - / 1 = 1
09.11	SLOT 1 VIE NAME	Shows the VIE name in slot 1.	-/ *Real* 1 = 1
09.12	SLOT 1 VIE VER	Shows the VIE version in slot 1.	-/ *Real* 1 = 1
09.13	SLOT 2 VIE NAME	Shows the VIE name in slot 2.	-/ *Real* 1 = 1
09.14	SLOT 2 VIE VER	Shows the VIE version in slot 2.	-/ *Real* 1 = 1

No.	Bit/Name/Value/ Range	Description	Def/Type FbEq (16b/32b)
09.20	OPTION SLOT 1	Shows the type of the optional module in option slot 1.	NO OPTION/ *INT32*
	NO OPTION	No modules detected.	0
	NO COMM	Detected communication loss between drive and module.	1
	UNKNOWN	Unknown module detected.	2
	FEN-01	FEN-01 module detected.	3
	FEN-11	FEN-11 module detected.	4
	FEN-21	FEN-21 module detected.	5
	FIO-01	FIO-01 module detected.	6
	FIO-11	FIO-11 module detected.	7
	FPBA-01	FPBA-01 module detected.	8
	FPBA-02	FPBA-02 module detected.	9
	FCAN-01	FCAN-01 module detected.	10
	FDNA-01	FDNA-01 module detected.	11
	FENA-01	FENA-01 module detected.	12
	FENA-02	FENA-02 module detected.	13
	FLON-01	FLON-01 module detected.	14
	FRSA-00	FRSA-01 module detected.	15
	FMBA-01	FMBA-01 module detected.	16
	FFOA-01	FFOA-01 module detected.	17
	FFOA-02	FFOA-02 module detected.	18
	FSEN-01	FSEN-01 module detected.	19
	FEN-31	FEN-31 module detected.	20
	FIO-21	FIO-21 module detected.	21
	FSCA-01	FSCA-01 module detected.	22
	FSEA-21	FSEA-01 module detected.	23
09.21	OPTION SLOT 2	Shows the type of the optional module in option Slot 2. See *09.20* OPTION SLOT 1.	NO OPTION/ *INT32*
09.22	OPTION SLOT 3	Shows the type of the optional module in option Slot 3. See *09.20* OPTION SLOT 1.	NO OPTION/ *INT32*

Parameter groups 10…99

No.	Bit/Name/Value/ Range	Description	Def/Type FbEq (16b/32b)
10 START/STOP		Start/stop/direction, slowdown and end limits source selections.	
10.01	START FUNC	Selects the source for the start and stop control in external control. **Note:** This parameter cannot be changed while the drive is running.	IN1 F IN2R/ *enum*
	Not sel	No source selected.	0
	In1	Source of the start and stop commands is selected by parameter *10.02* UP COMMAND. The start/stop is controlled as follows: **Par. *10.02*** / **Command** 0 -> 1 / Start 1 -> 0 / Stop	1
	3-wire	Source of the start and stop commands is selected by parameters *10.02* UP COMMAND and *10.03* DOWN COMMAND. The start/stop is controlled as follows: **Par. *10.02*** / **Par. *10.03*** / **Command** 0 -> 1 / 1 / Start Any / 1 -> 0 / Stop Any / 0 / Stop	2
	FBA	Start and stop control from the source selected by parameter *72.04* FB CW USED.	3
	IN1 F IN2R	The source selected by *10.02* UP COMMAND is the forward start signal, the source selected by *10.03* DOWN COMMAND is the reverse start signal. **Par. *10.02*** / **Par. *10.03*** / **Command** 0 / 0 / Stop 1 / 0 / Start forward 0 / 1 / Start reverse 1 / 1 / Stop	4
	IN1S IN2DIR	The source selected by *10.02* UP COMMAND is the start signal (0 = stop, 1 = start), the source selected by *10.03* DOWN COMMAND is the direction signal (0 = forward, 1 = reverse).	5

No.	Bit/Name/Value/ Range	Description	Def/Type FbEq (16b/32b)
	PANEL	Start and stop control from the panel.	6
	EFB	Start and stop control from parameter *02.15* EFB MAIN CW.	7
10.02	UP COMMAND	Drive start up command. This parameter is read-only.	DI1/ *Bit pointer*
		Bit pointer: CONST or POINTER (See *Terms and abbreviations* on page *183*.)	- / 1 = 1
10.03	DOWN COMMAND	Drive start down command. This parameter is read-only.	DI 2/ *Bit pointer*
		Bit pointer: CONST or POINTER (See *Terms and abbreviations* on page *183*.)	- / 1 = 1
10.04	DRIVE ENABLE	Selects the source for the Drive enable signal. 1 = Run enable. When this signal is switched Off, the drive does not start, or if the drive was running, it will stop. **Note:** This parameter cannot be changed while the drive is running.	C.True/ *Bit pointer*
		Bit pointer: CONST or POINTER (See *Terms and abbreviations* on page *183*.)	- / 1 =1
10.05	EM STOP OFF1	Selects the source for the emergency stop OFF1. 0 = OFF1 active: The drive is stopped with the active deceleration time. See section *Emergency stop* on page *169*. **Note:** This parameter cannot be changed while the drive is running.	True/ *Bit pointer*
		Bit pointer: CONST or POINTER (See *Terms and abbreviations* on page *183*.)	- / 1 =1
10.06	START DELAY	Defines the delay time to start modulation. The contactor between drive and motor is closed at this time. The signal *03.07* MOT CONTACT CTRL can be used to control the motor contactor.	100 ms/ *Real*
	0...1000 ms	Delay time	1 = 1 ms

No.	Bit/Name/Value/ Range	Description	Def/Type FbEq (16b/32b)
10.07	DC MAGN TIME	Defines the constant DC magnetising time. After the start command, the drive automatically premagnetises the motor at the set time. To make sure that motor is magnetised fully, this value can be set to the same value as or higher than the rotor time constant. If value is not known, use the rule-of-thumb value given in the table below: **Motor rated power** / **Constant magnetising time** < 1 kW / ≥ 50 to 100 ms 1 to 10 kW / ≥ 100 to 200 ms 10 to 200 kW / ≥ 200 to 1000 ms 200 to 1000 kW / ≥ 1000 to 2000 ms **Note:** This parameter cannot be changed while the drive is running.	500 ms/ *Real*
	0…10000 ms	DC magnetising time.	1 = 1 ms
10.80	LIFT RUN ENABLE	Selects the source for the Run enable signal. 1 = Run enable When the Run enable signals is switched Off, the drive will not start, or if the drive is running, it will stop. **Note**: This parameter cannot be changed while the drive is running.	C.TRUE / *Bit pointer*
		Bit pointer: CONST or POINTER (See *Terms and abbreviations* on page *183*.)	
10.81	EVACUATION MODE	Selects the source for enabling/disabling the evacuation mode. 1 = Evacuation mode is enabled. 0 = Evacuation mode is disabled. The evacuation mode is used for a lift car rescue operation in case the power supply fails. For more information, see section *Rescue operation* on page *173*.	C.FALSE/ *Bit pointer*
		Bit pointer: CONST or POINTER (See *Terms and abbreviations* on page *183*.)	
10.82	EVACUATION AUTO	Selects the manual or automatic evacuation mode.	DISABLED/ *enum*
	DISABLED	Manual evacuation mode is enabled.	0
	AUTOMATIC	Automatic evacuation mode is enabled. In this mode drive measures the direction of the lighter load and selects the evacuation direction accordingly.	1

No.	Bit/Name/Value/ Range	Description	Def/Type FbEq (16b/32b)
	RECOMMENDED	Drive stores the light load direction at each start to non volatile memory.	2
10.83	FLOOR LIM SWITCH	Selects the source from which the Lift control program reads the floor limit switch signal. This signal is activated when the lift reaches any of the floors and when any of the floor limit switches is hit. 1 = Lift has reached the floor position. 0 = Lift is not in the floor position.	C.FALSE/ *Bit pointer*
		Bit pointer: CONST or POINTER (See *Terms and abbreviations* on page *183*.)	
10.84	INSPECTION MODE	Selects the source for enabling/disabling the inspection mode. 1 = Inspection mode is enabled. 0 = Inspection mode is disabled. Enabling the inspection mode also enables parameters *10.85* INSPECTION UP and *10.86* INSPECTION DOWN. For more information, see section *Inspection mode* on page *135*.	C.FALSE/ *Bit pointer*
		Bit pointer: CONST or POINTER (See *Terms and abbreviations* on page *183*.)	
10.85	INSPECTION UP	Selects the source for starting the lift in the upward direction when the inspection mode is enabled with parameter *10.84* INSPECTION MODE. 1 = Lift is started in the upward direction. 0 = Lift is not moving in the upward direction.	C.FALSE/ *Bit pointer*
		Bit pointer: CONST or POINTER (See *Terms and abbreviations* on page *183*.)	
10.86	INSPECTION DOWN	Selects the source for starting the lift in the downward direction when the inspection mode is enabled with parameter *10.84* INSPECTION MODE. 1 = Lift is started in the downward direction. 0 = Lift is not moving in the downward direction.	C.FALSE/ *Bit pointer*
		Bit pointer: CONST or POINTER (See *Terms and abbreviations* on page *183*.)	

No.	Bit/Name/Value/ Range	Description	Def/Type FbEq (16b/32b)
10.87	LIFT CW	Lift control word for fieldbus control.	0x0000/ *UINT32*

Bit	Name	Value	Information
0	START UP	1	Start command is active in the upward direction.
		0	Start command is inactive in the upward direction.
1	START DOWN	1	Start command is active in the downward direction.
		0	Start command is inactive in the downward direction.
2	INSPECT START UP	1	Inspection mode is enabled in the upward direction.
		0	Inspection mode is disabled in the upward direction.
3	INSPECT START DN	1	Inspection mode is enabled in the downward direction.
		0	Inspection mode is disabled in the downward direction.
4	SPEED REF SEL1	1	Speed selection bit 1 is enabled.
		0	Speed selection bit 1 is disabled.
5	SPEED REF SEL2	1	Speed selection bit 2 is enabled.
		0	Speed selection bit 2 is disabled.
6	SPEED REF SEL3	1	Speed selection bit 3 is enabled.
		0	Speed selection bit 3 is disabled.
7	RUN ENABLE	1	Run enable signal is active.
		0	Run enable signal is inactive.
8	FAULT RESET	1	Fault reset signal is active.
		0	Fault reset signal is inactive.
9…15	NOT USED		

	0x0000…0xFFFF	Control word.	- / 1 = 1
10.88	EVAC REC CUR LIM	Defines the recommended evacuation current limit.	10 %/ *Real*
	0...100 %	Evacuation current limit.	1 = 1
10.89	EVAC REC DIR MEM	Shows the recommended evacuation direction.	FORWARD/ *enum*
	FORWARD	Forward direction	0
	BACKWARD	Reverse direction	1

12 DIGITAL IO		Settings for the digital inputs and outputs, and the relay output.	
12.01	DIO1 CONF	Selects whether DIO1 is used as a digital input or as a digital output.	Input/ *enum*
	Output	DIO1 is used as a digital output.	0
	Input	DIO1 is used as a digital input.	1
12.02	DIO2 CONF	Selects whether DIO2 is used as a digital input, as a digital output or as a frequency input.	Output/ *enum*
	Output	DIO2 is used as a digital output.	0
	Input	DIO2 is used as a digital input.	1

No.	Bit/Name/Value/ Range	Description	Def/Type FbEq (16b/32b)
	Freq input	DIO2 is used as a frequency input.	2
12.03	DIO3 CONF	Selects whether DIO3 is used as a digital input, as a digital output or as a frequency output.	Output/ *enum*
	Output	DIO3 is used as a digital output.	0
	Input	DIO3 is used as a digital input.	1
	Freq output	DIO3 is used as a frequency output.	3
12.04	DIO1 OUT PTR	Selects a drive signal to be connected to digital output DIO1 (when *12.01* DIO1 CONF is set to *Output*). See parameter *06.02* STATUS WORD 2, bit 2.	C.False/ *Bit pointer*
		Bit pointer: CONST or POINTER (See *Terms and abbreviations* on page *183*.)	1 = 1
12.05	DIO2 OUT PTR	Selects a drive signal to be connected to digital output DIO2 (when *12.02* DIO2 CONF is set to *Output*). See parameter *06.02* STATUS WORD 2, bit 3.	READY/ *Bit pointer*
	READY	Parameter *06.01* STATUS WORD 1, bit 0.	
	ENABLED	Parameter *06.01* STATUS WORD 1, bit 1.	
	STARTED	Parameter *06.01* STATUS WORD 1, bit 2.	
	RUNNING	Parameter *06.01* STATUS WORD 1, bit 3.	
	FAULT	Parameter *06.01* STATUS WORD 1, bit 10.	
	NOT FAULTED	Parameter *06.01* STATUS WORD 1, bit 12.	
12.06	DIO3 OUT PTR	Selects a drive signal to be connected to digital output DIO3 (when *12.03* DIO3 CONF is set to *Output*). See parameter *06.01* STATUS WORD 1, bit 10.	FAULT/ *Bit pointer*
		See description in parameter *12.05* DIO2 OUT PTR.	1 = 1
12.07	RO1 OUT PTR	Selects a drive signal to be connected to relay output RO1. See parameter *03.06* CONTROL VALUES, bit 0.	BRAKE CMD/ *Bit pointer*
	BRAKE CMD	Parameter *03.06* BRAKE COMMAND.	
	READY	Parameter *06.01* STATUS WORD 1, bit 0.	
	ENABLED	Parameter *06.01* STATUS WORD 1, bit 1.	
	STARTED	Parameter *06.01* STATUS WORD 1, bit 2.	
	RUNNING	Parameter *06.01* STATUS WORD 1, bit 3.	
	FAULT	Parameter *06.01* STATUS WORD 1, bit 10.	
	NOT FAULTED	Parameter *06.01* STATUS WORD 1, bit 12.	

No.	Bit/Name/Value/ Range	Description	Def/Type FbEq (16b/32b)
12.08	DI INVERT MASK	Inverts status of digital inputs as reported by *02.01* DI STATUS. For example, a value of 0b000100 inverts the status of DI3 in the signal.	0b000000/ *UINT32*

Bit	Name	Value	Information
0	INVERT DI1	1	Digital input DI1 is Off
		0	Digital input DI1 is On.
1	INVERT DI2	1	Digital input DI2 is Off
		0	Digital input DI2 is On.
2	INVERT DI3	1	Digital input DI3 is Off
		0	Digital input DI3 is On.
3	INVERT DI4	1	Digital input DI4 is Off.
		0	Digital input DI4 is On.
4	INVERT DI5	1	Digital input DI5 is Off.
		0	Digital input DI5 is On.
5	INVERT DI6	1	Digital input DI6 is Off.
		0	Digital input DI6 is On.

	0b000000… 0b111111	DI status inversion mask.	1 = 1 / -
12.09	DIO INVERT MASK	Inverts status of digital inputs/outputs DIO1…3 as reported by *02.03* DIO STATUS. For example, a value of 0b001 inverts the status of DIO1 in the signal.	0b000/ *UINT32*

Bit	Name	Value	Information
0	INVERT DIO1	1	Digital input/output DIO1 is Off
		0	Digital input/output DiO1 is On.
1	INVERT DIO2	1	Digital input/output DIO2 is Off.
		0	Digital input/output DIO2 is On.
2	INVERT DIO3	1	Digital input/output DIO3 is Off.
		0	Digital input/output DIO3 is On.

	0b000…0b111	DIO status inversion mask.	1 = 1 / -
12.80	EXT IO SEL	Activates an I/O extension installed into Slot 2.	None/ *enum*
	None	No extension installed into Slot 2.	0
	FIO-01	FIO-01 extension installed into Slot 2.	1
12.81	EXT IO DIO1 CONF	Selects whether extension DIO1 is used as a digital input or as a digital output in a FIO-01 digital I/O extension module.	Input/ *enum*
	Input	Extension DIO1 is used as a digital input.	0
	Output	Extension DIO1 is used as a digital output.	1

No.	Bit/Name/Value/ Range	Description	Def/Type FbEq (16b/32b)
12.82	EXT IO DIO2 CONF	Selects whether extension DIO2 is used as a digital input or as a digital output in a FIO-01 digital I/O extension module.	Input/ *enum*
	Input	Extension DIO2 is used as a digital input.	0
	Output	Extension DIO2 is used as a digital output.	1
12.83	EXT IO DIO3 CONF	Selects whether extension DIO3 is used as a digital input or as a digital output in a FIO-01 digital I/O extension module.	Input/ *enum*
	Input	Extension DIO3 is used as a digital input.	0
	Output	Extension DIO3 is used as a digital output.	1
12.84	EXT IO DIO4 CONF	Selects whether extension DIO4 is used as a digital input or as a digital output in a FIO-01 digital I/O extension module.	Input/ *enum*
	Input	Extension DIO4 is used as a digital input.	0
	Output	Extension DIO4 is used as a digital output.	1
12.85	EXT DIO1 OUT PTR	Selects a drive signal to be connected to extended digital output EXT DIO1 (when *12.81* EXT IO DIO1 CONF is set to *Output*).	C.False/ *Bit pointer*
		Bit pointer: CONST or POINTER (See *Terms and abbreviations* on page *183*.)	
12.86	EXT DIO2 OUT PTR	Selects a drive signal to be connected to extended digital output EXT DIO2 (when *12.82* EXT IO DIO2 CONF is set to *Output*).	C.False/ *Bit pointer*
		Bit pointer: CONST or POINTER (See *Terms and abbreviations* on page *183*.)	
12.87	EXT DIO3 OUT PTR	Selects a drive signal to be connected to extended digital output EXT DIO3 (when *12.83* EXT IO DIO3 CONF is set to *Output*).	C.False/ *Bit pointer*
		Bit pointer: CONST or POINTER (See *Terms and abbreviations* on page *183*.)	
12.88	EXT DIO4 OUT PTR	Selects a drive signal to be connected to extended digital output EXT DIO4 (when *12.84* EXT IO DIO4 CONF is set to *Output*).	C.False/ *Bit pointer*
		Bit pointer: CONST or POINTER (See *Terms and abbreviations* on page *183*.)	
12.89	EXT RO1 OUT PTR	Selects a drive signal to be connected to extended relay output EXT RO1.	C.False/ *Bit pointer*
		Bit pointer: CONST or POINTER (See *Terms and abbreviations* on page *183*.)	
12.90	EXT RO2 OUT PTR	Selects a drive signal to be connected to extended relay output EXT RO2.	C.False/ *Bit pointer*
		Bit pointer: CONST or POINTER (See *Terms and abbreviations* on page *183*.)	

No.	Bit/Name/Value/ Range	Description	Def/Type FbEq (16b/32b)
13 ANALOGUE INPUTS		Settings for the analogue inputs.	
13.01	AI1 FILT TIME	Defines the filter time constant for analogue input AI1. 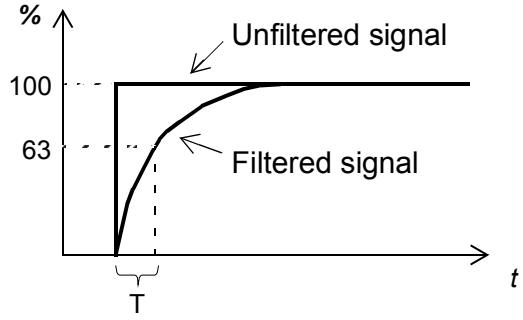 $O = I \times (1 - e^{-t/T})$ I = filter input (step) O = filter output *t* = time **Note:** The signal is also filtered due to the signal interface hardware (approximately 0.25 ms time constant). This cannot be changed by any parameter.	0.000 s/ *Real*
	0.000…30.000 s	Filter time constant for AI1.	1000 = 1 s / -
13.02	AI1 MAX	Defines the maximum value for analogue input AI1. The type is selected with jumper J1 on the JCU control unit.	10.000 V/ *Real*
	-11.000… 11.000 V / -22.000… 22.000 mA	Maximum AI1 input value.	1000 = 1 V or mA / -
13.03	AI1 MIN	Defines the minimum value for analogue input AI1. The type is selected with jumper J1 on the JCU control unit.	-10.000 V/ *Real*
	-11.000… 11.000 V / -22.000… 22.000 mA	Minimum AI1 input value.	1000 = 1 V or mA / -

No.	Bit/Name/Value/ Range	Description	Def/Type FbEq (16b/32b)
13.04	AI1 MAX SCALE	Defines the real value that corresponds to the maximum analogue input value defined by parameter *13.02* AI1 MAX. 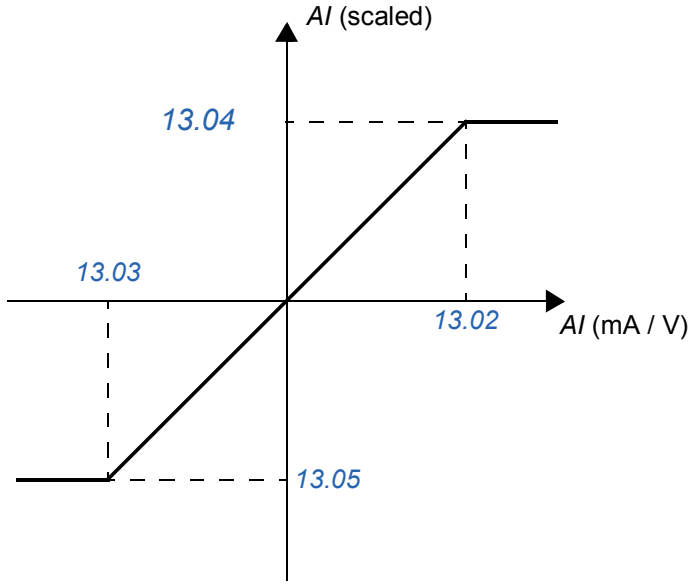	1500.000/ *Real*
	-32768.000 …32768.000	Real value corresponding to the value of parameter *13.02*.	- / 1000 = 1
13.05	AI1 MIN SCALE	Defines the real value that corresponds to the minimum analogue input value defined by parameter *13.03* AI1 MIN. See parameter *13.04* AI1 MAX SCALE.	-1500.000/ *Real*
	-32768.000 …32768.000	Real value corresponding to the value of parameter *13.03*.	- / 1000 = 1
13.06	AI2 FILT TIME	Defines the filter time constant for analogue input AI2. See parameter *13.01* AI1 FILT TIME.	0.000 s/ *Real*
	0.000…30.000 s	Filter time constant for AI2.	1000 = 1 s / -
13.07	AI2 MAX	Defines the maximum value for analogue input AI2. The type is selected with jumper J2 on the JCU Control Unit.	10.000/ V *Real*
	-11.000… 11.000 V / -22.000… 22.000 mA	Maximum AI2 input value.	1000 = 1 V or mA / -

No.	Bit/Name/Value/ Range	Description	Def/Type FbEq (16b/32b)
13.08	AI2 MIN	Defines the minimum value for analogue input AI2. The type is selected with jumper J2 on the JCU Control Unit.	-10.000 V/ *Real*
	-11.000… 11.000 V / -22.000… 22.000 mA	Minimum AI2 input value.	1000 = 1 V or mA / -
13.09	AI2 MAX SCALE	Defines the real value that corresponds to the maximum analogue input value defined by parameter *13.07* AI2 MAX. 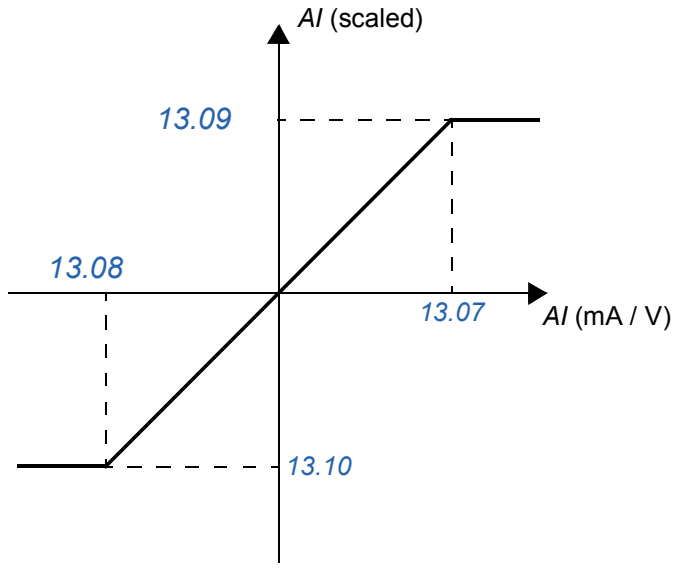	100.000/ *Real*
	-32768.000 …32768.000	Real value corresponding to the value of parameter *13.07*.	- / 1000 = 1
13.10	AI2 MIN SCALE	Defines the real value that corresponds to the minimum analogue input value defined by parameter *13.08* AI2 MIN. See parameter *13.09* AI2 MAX SCALE.	-100.000/ *Real*
	-32768.000 …32768.000	Real value corresponding to the value of parameter *13.08*.	- / 1000 = 1
13.11	AITUNE	Triggers the AI tuning function. Connect the signal to the input and select the appropriate tuning function.	No action/ *enum*
	No action	AI tune is not activated.	0
	AI1 min tune	Current analogue input AI1 signal value is set as minimum value for AI1, parameter *13.03* AI1 MIN. The value reverts back to *No action* automatically.	1

No.	Bit/Name/Value/ Range	Description	Def/Type FbEq (16b/32b)
	AI2 max tune	Current analogue input AI1 signal value is set as maximum value for AI1, parameter *13.02* AI1 MAX. The value reverts back to *No action* automatically.	2
	AI2 min tune	Current analogue input AI2 signal value is set as minimum value for AI2, parameter *13.08* AI2 MIN. The value reverts back to *No action* automatically.	3
	AI2 max tune	Current analogue input AI2 signal value is set as maximum value for AI2, parameter *13.07* AI2 MAX. The value reverts back to *No action* automatically.	4
13.12	AI SUPERVISION	Selects how the drive reacts when analogue input signal limit is reached. The limit is selected by parameter *13.13* AI SUPERVIS ACT.	No / *enum*
	No	No action taken.	0
	Fault	The drive trips on fault AI SUPERVISION.	1
	Spd ref safe	The drive generates alarm AI SUPERVISION and sets the speed. **WARNING!** In case of a communication break, make sure that it is safe to continue operation.	2
	Last speed	The drive generates alarm AI SUPERVISION and freezes the speed to the level the drive was operating at. The speed is determined by the average speed over the previous 10 seconds. **WARNING!** In case of a communication break, make sure that it is safe to continue operation.	3
13.13	AI SUPERVIS ACT	Selects the analogue input signal supervision limit.	0b0000 / *UINT32*

Bit	Name	Supervision selected by parameter *13.12* AI SUPERVISION is activated if
0	AI1<min	AI1 signal value falls below the value defined by equation: par. *13.03* AI1 MIN - 0.5 mA or V
1	AI1>max	AI1 signal value exceeds the value defined by equation: par. *13.02* AI1 MAX + 0.5 mA or V
2	AI2<min	AI2 signal value falls below the value defined by equation: par. *13.08* AI2 MIN - 0.5 mA or V
3	AI2>min	AI1 signal value exceeds the value defined by equation: par. *13.07* AI2 MAX + 0.5 mA or V

Example: If the parameter value is set to 0010 (bin), bit 1 AI1>max is selected.

No.	Bit/Name/Value/ Range	Description	Def/Type FbEq (16b/32b)
	0b0000…0b1111	AI1/AI2 signal supervision selection.	1 = 1

15 ANALOGUE OUTPUTS		Settings for the analogue outputs.	
15.01	AO1 PTR	Selects a drive signal to be connected to analogue output AO1. See parameter *01.05* CURRENT PERC.	P.CURRENT PERC / *Val pointer*
		Value pointer (See *Terms and abbreviations* on page *183*.)	
15.02	AO1 FILT TIME	Defines the filtering time constant for analogue output AO1. 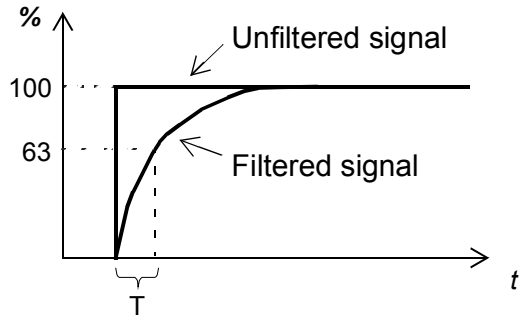 $O = I \times (1 - e^{-t/T})$ I = filter input (step) O = filter output *t* = time	0.100 s/ *Real*
	0.000…30.000 s	Filter time constant for AO1.	1000 = 1 s / -
15.03	AO1 MAX	Defines the maximum value for analogue output AO1.	20.000 mA/ *Real*
	0.000…22.700 mA	Maximum AO1 output value.	1000 = 1 mA / -
15.04	AO1 MIN	Defines the minimum value for analogue output AO1.	4.000 mA/ *Real*
	0.000…22.700 mA	Minimum AO1 output value.	1000 = 1 mA / -

No.	Bit/Name/Value/ Range	Description	Def/Type FbEq (16b/32b)
15.05	AO1 MAX SCALE	Defines the real value that corresponds to the maximum analogue output value defined by parameter *15.03* AO1 MAX. 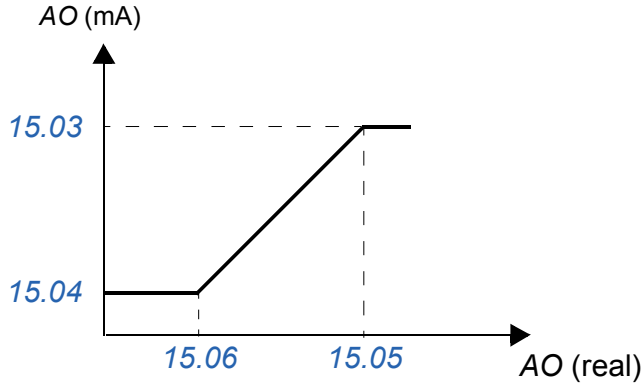 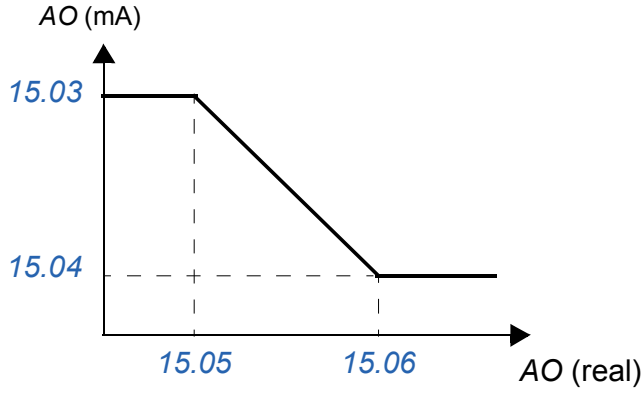 	100.000 / *Real*
	-32768.000 …32768.000	Real value corresponding to the value of parameter *15.03*.	- / 1000 = 1
15.06	AO1 MIN SCALE	Defines the real value that corresponds to the minimum analogue output value defined by parameter *15.04* AO1 MIN. See parameter *15.05* AO1 MAX SCALE.	0.000 / *Real*
	-32768.000 …32768.000	Real value corresponding to the value of parameter *15.04*.	- / 1000 = 1
15.07	AO2 PTR	Selects a drive signal to be connected to analogue output AO2. See parameter *01.02* SPEED ACT PERC.	P.SPEED ACT PERC / *Val pointer*
		Value pointer (See *Terms and abbreviations* on page *183*.)	
15.08	AO2 FILT TIME	Defines the filtering time constant for analogue output AO2. See parameter *15.02* AO1 FILT TIME.	0.100 s / *Real*
	0.000…30.000 s	Filter time constant for AO2.	1000 = 1 s / -

No.	Bit/Name/Value/ Range	Description	Def/Type FbEq (16b/32b)
15.09	AO2 MAX	Defines the maximum value for analogue output AO2.	10.000 V / *Real*
	-10.000… 10.000 V	Maximum AO2 output value.	1000 = 1 V / -
15.10	AO2 MIN	Defines the minimum value for analogue output AO2.	-10.000 V / *Real*
	-10.000… 10.000 V	Minimum AO2 output value.	1000 = 1 V / -
15.11	AO2 MAX SCALE	Defines the real value that corresponds to the maximum analogue output value defined by parameter *15.09* AO2 MAX. 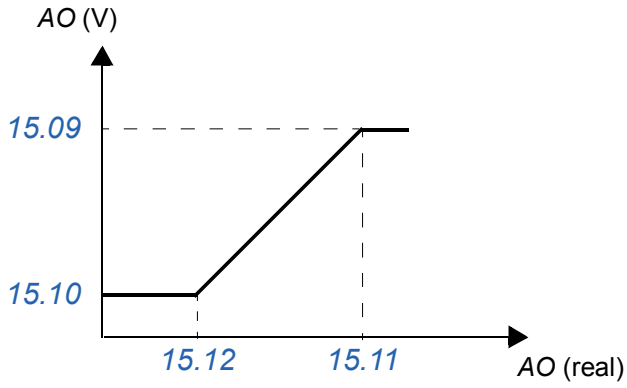 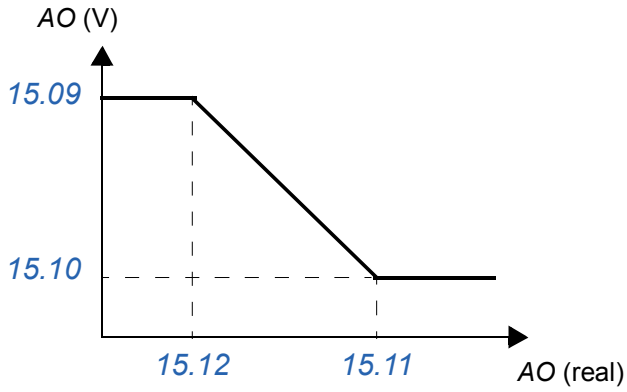	100.000 V / *Real*
	-32768.000 …32768.000	Real value corresponding to the value of parameter *15.09*.	- / 1000 = 1
15.12	AO2 MIN SCALE	Defines the real value that corresponds to the minimum analogue output value defined by parameter *15.10* AO2 MIN. See parameter *15.11* AO2 MAX SCALE.	-100.000 V / *Real*
	-32768.000 …32768.000	Real value corresponding to the value of parameter *15.10*.	- / 1000 = 1

No.	Bit/Name/Value/ Range	Description	Def/Type FbEq (16b/32b)
16 SYSTEM		Local control and parameter access settings, restoration of default parameter values and saving of parameters into permanent memory.	
16.01	LOCAL LOCK	Selects the source for disabling local control (Take/Release button on the PC tool, LOC/REM key of the panel). 1 = Local control disabled. 0 = Local control enabled. **WARNING!** Before activating, make sure that the control panel is not needed for stopping the drive.	C.False / *Bit pointer*
		Bit pointer: CONST or POINTER (See *Terms and abbreviations* on page *183*.)	1 = 1
16.02	PARAMETER LOCK	Selects the state of the parameter lock. The lock prevents parameter changing. **Note:** This parameter can only be adjusted after the correct pass code is entered at parameter *16.03* PASS CODE.	Open / *enum*
	Locked	Locked. Parameter values cannot be changed from the control panel.	0
	Open	The lock is open. Parameter values can be changed.	1
	Not saved	The lock is open. Parameter values can be changed, but the changes will not be stored at power switch off.	2

No.	Bit/Name/Value/ Range	Description	Def/Type FbEq (16b/32b)
16.03	PASS CODE	Selects the pass code for the parameter lock (see parameter *16.02* PARAMETER LOCK). After entering 358 at this parameter, parameter *16.02* PARAMETER LOCK can be adjusted. The value reverts back to 0 automatically. Entering the user pass code (by default, "10000000") enables writing to parameters *16.12*…*16.14*, which can be used to define a new user pass code and to select the actions that are to be prevented. Entering an invalid pass code will close the user lock if open, i.e. make parameters *16.12*…*16.14* read only. After entering the code, check that the parameters are in read only. **Note**: You must change the default user pass code to maintain a high level of cybersecurity. **Important!** Store the pass code in a safe place. The protection cannot be disabled even by ABB if the code is lost. See also section *User lock* (page *162*).	0 / *INT32*
	0…2147483647	Pass code.	- / 1 = 1
16.04	PARAM RESTORE	Restores the original settings of the application, ie, parameter factory default values. **Note:** This parameter cannot be changed while the drive is running.	Done / *enum*
	Done	Restoration is completed.	0
	Restore defs	All parameter values are restored to default values, except motor data, ID run results, and fieldbus, drive-to-drive link and encoder configuration data.	1
	Clear all	All parameter values are restored to default values, including motor data, ID run results and fieldbus and encoder configuration data. PC tool communication is interrupted during the restoration. Drive CPU is re-booted after the restoration is completed.	2
16.05	PARAM SAVE	Saves the valid parameter values to the permanent memory. See also section *Setting parameters* on page *184*.	Done / *enum*
	Done	Save completed.	0
	Save	Save in progress.	1
16.06	PARAM CLEAR	Clears the valid parameter values from the permanent memory. See also section *Setting parameters* on page *184*.	Done / *enum*
	Done	Clearing completed.	0

No.	Bit/Name/Value/ Range	Description	Def/Type FbEq (16b/32b)
	Clearing...	Clearing in progress.	1
16.07	USER SET SEL	Enables the save and restoration of up to 50 custom sets of parameter settings. The set that was in use before powering down the drive is in use after the next power-up. **Note:** • Any parameter changes made after loading a user set are not automatically stored into the loaded set. Changes must be saved using this parameter. • This parameter cannot be changed while the drive is running.	0 / *enum*
	-1...1050	User set selection	- / 1
16.08	USER SET LOG	Shows the status of the user parameter sets (see parameter *16.07* USER SET SEL). This parameter is read-only.	N/A / *Pb*
	N/A	No user sets are saved.	0
	Loading	A user set is loaded.	1
	Saving	A user set is saved.	2
	Faulted	Invalid or empty parameter set.	4
	Set1 IO act	User parameter set 1 is selected by parameters *16.09* and *16.10*.	8
	Set2 IO act	User parameter set 2 is selected by parameters *16.09* and *16.10*.	16
	Set3 IO act	User parameter set 3 is selected by parameters *16.09* and *16.10*.	32
	Set4 IO act	User parameter set 4 is selected by parameters *16.09* and *16.10*.	64
	Set1 par act	User parameter set 1 is loaded using parameter *16.07*.	128
	Set2 par act	User parameter set 2 is loaded using parameter *16.07*.	256
	Set3 par act	User parameter set 3 is loaded using parameter *16.07*.	512
	Set4 par act	User parameter set 4 is loaded using parameter *16.07*.	1024

No.	Bit/Name/Value/ Range	Description	Def/Type FbEq (16b/32b)
16.09	USET IO SEL LO	Together with parameter *16.10* USET IO SEL HI, selects the user parameter set when parameter *16.07* USER SET SEL is set to *IO mode*. The status of the source defined by this parameter and parameter *16.10* selects the user parameter set as follows: **Status of source defined by par. *16.09*** / **Status of source defined by par. *16.10*** / **User parameter set selected** FALSE / FALSE / Set 1 TRUE / FALSE / Set 2 FALSE / TRUE / Set 3 TRUE / TRUE / Set 4	C.False / *Bit pointer*
		Bit pointer: CONST or POINTER (See *Terms and abbreviations* on page *183*.)	
16.10	USET IO SEL HI	See parameter *16.09* USET IO SEL LO.	C.False / *Bit pointer*
		Bit pointer: CONST or POINTER (See *Terms and abbreviations* on page *183*.)	
16.11	TIME SOURCE PRIO	Selects which real-time clock source is adopted by the drive as the master real-time clock. Some selections specify multiple sources that are in the order of priority.	FB_MMI / *enum*
	FB_MMI	Fieldbus (highest priority); man-machine interface (control panel or PC).	0
	FB only	Fieldbus only.	4
	MMI_FB	Man-machine interface (control panel or PC) (highest priority); fieldbus; drive-to-drive link.	6
	MMI only	Man-machine interface (control panel or PC) only.	7
	Internal	No external sources are used as master real-time clock.	8

No.	Bit/Name/Value/ Range	Description	Def/Type FbEq (16b/32b)
16.12	USER PASS CODE	(*Writable when user lock is open*) To change the current user pass code, enter a new code into this parameter as well as *16.13* CONFIRM PASSCODE. A warning will be active until the new pass code is confirmed. To cancel changing the pass code, close the user lock without confirming. To close the lock, enter an invalid pass code in parameter *16.03* PASS CODE, or cycle the power. See also section User lock (page *162*).	0 / *INT32*
	0…2147483647	New user pass code.	- / 1 =1
16.13	CONFIRM PASSCODE	(*Writable when user lock is open*) Confirms the new user pass code entered in *16.12* USER PASS CODE.	0 / *INT32*
	0…2147483647	Confirmation of new user pass code.	- / 1 =1
16.14	USER LOCK FUNC	(*Writable when user lock is open*) Selects the actions or functionalities to be prevented by the user lock. Note that the changes made take effect only when the user lock is closed. See parameter *16.03* PASSCODE. **Note:** We recommend you select all the actions and functionalities unless otherwise required by the application.	0x0000 / *Pb*

Bit	Name	Information
0	FREEZE PAR LOCK	1 = Changing the parameter lock state is prevented, i.e. pass code 358 has no effect
1	FILE DOWNLOAD	1 = Loading of files to drive is prevented. This applies to • firmware upgrades • parameter restore • parameter clear • loading and debugging an application program
2…15	Not used	

	0x0000…0xFFFF	Selection of actions to be prevented by user lock.	1 = 1

20 LIMITS		Drive operation limits.	
20.01	ABS MAX SPEED	Defines the absolute maximum speed of the motor. See also parameter *20.03* SPEED TRIPMARGIN.	1500 rpm / *Real*
	0…30000 rpm	Absolute maximum speed.	- / 1 = 1 rpm

No.	Bit/Name/Value/ Range	Description	Def/Type FbEq (16b/32b)
20.02	MAXIMUM CURRENT	Defines the allowed maximum motor current.	- / *Real*
	0.00… 30000.00 A	Maximum allowed motor current.	- / 100 = 1 A
20.03	SPEED TRIPMARGIN	Defines, together with *20.01* ABS MAX SPEED, the maximum allowed speed of the motor (overspeed protection). If the actual speed (*01.01* SPEED ACT) exceeds the speed limit defined by parameter *20.01* by more than this value, the drive trips on fault OVERSPEED. Example: If the maximum speed is 1420 rpm and speed trip margin is 300 rpm, the drive trips at 1720 rpm. 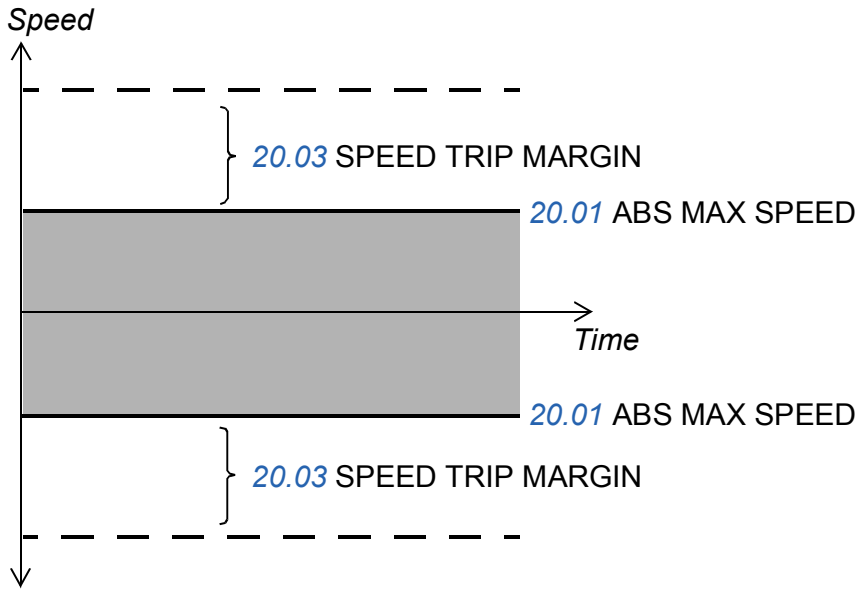	500.0 rpm / *Real*
	0.0… 10000.0 rpm	Speed trip margin.	- / 10 = 1 rpm

22 SPEED FEEDBACK		Settings for speed feedback selection, zero speed selection, actual speed supervision, etc.	
22.01	SPEED FB SEL	Selects the speed feedback value used in control.	Enc speed / *enum*
	Estimated	Calculated speed estimate.	0
	Enc speed	Actual speed measured with encoder. The encoder is selected by parameter *90.01* ENCODER SEL.	1

No.	Bit/Name/Value/ Range	Description	Def/Type FbEq (16b/32b)
22.02	SPEED ACT FTIME	Defines the time constant of the actual speed filter, that is, the time within the actual speed has reached 63% of the nominal speed (filtered speed = *01.01* SPEED ACT). If the used speed reference remains constant, the possible interferences in the speed measurement can be filtered with the actual speed filter. Reducing the ripple with the filter may cause speed controller tuning problems. A long filter time constant and fast acceleration time contradict one another. A very long filter time results in unstable control. If there are substantial interferences in the speed measurement, the filter time constant should be proportional to the total inertia of the load and motor, in this case 10…30% of the mechanical time constant $t_{mech} = (n_{nom} / T_{nom}) \times J_{tot} \times 2\pi / 60$, where J_{tot} = total inertia of the load and motor (the gear ratio between the load and motor must be taken into account) n_{nom} = motor nominal speed T_{nom} = motor nominal torque	5.000 ms / *Real*
	0.000… 10000.000 ms	Time constant for actual speed filter.	- / 1000 = 1 ms
22.03	SPEED FB FAULT	Selects the action in case of speed feedback data loss. **Note:** If this parameter is set to *Warning* or *No*, a loss of feedback will cause an internal faulted state. To clear the internal fault and to reactivate speed feedback, use parameter *90.06* ENC PAR REFRESH.	Fault / *enum*
	Fault	Drive trips on a fault (OPTION COMM LOSS, ENCODER FAILURE, ENCODER CABLE or SPEED FEEDBACK depending on the type of problem).	0
	Warning	Drive continues operation with open loop control and generates an alarm (OPTION COMM LOSS, ENCODER FAILURE or SPEED FEEDBACK depending on the type of problem).	1
	No	Drive continues operation with open loop control. No faults or alarms are generated.	2
22.04	SPEED REF SEL	Selects the source for speed reference.	INTERNAL / *enum*
	INTERNAL	Speed reference based on parameter *80.06*, *80.07*, *80.08* and *80.09*.	0

No.	Bit/Name/Value/ Range	Description	Def/Type FbEq (16b/32b)
	AI1	Speed reference from analogue input AI1.	1
	AI2	Speed reference from analogue input AI2.	2
	FBA REF1	Speed reference from fieldbus reference 1.	3
	FBA REF2	Speed reference from fieldbus reference 2.	4
	EFB REF1	Speed reference from EFB reference 1.	5
	EFB REF2	Speed reference from EFB reference 2.	6
22.05	SPEED SCALING	Internally used. Cannot be set by the user. Shows the motor rotational speed (rpm), which corresponds to the lift nominal speed (m/s) defined with parameter *80.01* NOMINAL SPEED. The parameter value is calculated based on the lift nominal speed, gear ratio, roping ratio and sheave diameter. See also section *Speed reference scaling* on page *142*. Also defines the rpm value that corresponds to 20000 for fieldbus communication with ABB Drives communication profile.	- / *Real*
	0...30000 rpm	Speed scaling value.	1 = 1 rpm
22.06	EM STOP TIME	Defines the time within which the drive is stopped if an emergency stop OFF3 is activated (ie, the time required for the speed to change from the speed value defined by parameter *22.05* SPEED SCALING to zero). The emergency stop OFF3 is activated if the Final limit switches or Leveling overtime stop function becomes active. See also section *Emergency stop* on page *169*. Emergency stop OFF1 uses the active ramp time.	1.000 s / *Real*
	0.000… 1800.000 s	Emergency stop OFF3 deceleration time.	- / 1000 = 1 s

25 ACC/DEC RAMP		Speed reference ramp settings.	
25.80	ACC/DEC SEL	Selects the source for the acceleration/deceleration set 1 or acceleration/deceleration set 2 used in the normal travel mode. 1 = Acc/dec set 2 is used. 0 = Acc/dec set 1 is used. For more information, see section *Acceleration/deceleration selection* on page *144*.	C.False/ *Bit pointer*
		Bit pointer: CONST or POINTER (See *Terms and abbreviations* on page *183*.)	

No.	Bit/Name/Value/ Range	Description	Def/Type FbEq (16b/32b)
25.81	ACC/DEC CHNG SPD	Selects the speed limit in % to change between acc/dec set 1 and 2.	0.0 %/ *Real*
	0.0...100.0 %	Percent of changing speed for acc/dec set 1 or set 2.	10 = 1 %
25.82	ACC1	Defines the acceleration for acc/dec set 1.	0.60 m/s^2 / *Real*
	0.01…25.00 m/s^2	Acc/dec set 1 acceleration.	100 = 1 m/s^2
25.83	DEC1	Defines the deceleration for acc/dec set 1.	0.60 m/s^2 / *Real*
	0.01…25.00 m/s^2	Acc/dec set 1 deceleration.	100 = 1 m/s^2
25.84	ACC2	Defines the acceleration for acc/dec set 2.	0.60 m/s^2 / *Real*
	0.01…25.00 m/s^2	Acc/dec set 2 acceleration.	100 = 1 m/s^2
25.85	DEC2	Defines the deceleration for acc/dec set 2.	0.60 m/s^2 / *Real*
	0.01…25.00 m/s^2	Acc/dec set 2 deceleration.	100 = 1 m/s^2
25.86	INSPECT MODE ACC	Defines the acceleration used when the inspection mode is active.	0.80 m/s^2 / *Real*
	0.01…25.00 m/s^2	Acceleration used in the inspection mode.	100 = 1 m/s^2
25.87	INSPECT MODE DEC	Defines the deceleration used when the inspection mode is active.	0.80 m/s^2 / *Real*
	0.01…25.00 m/s^2	Deceleration used in the inspection mode.	100 = 1 m/s^2
25.88	EVAC MODE ACC	Defines the acceleration used when the evacuation mode is active.	0.20 m/s^2 / *Real*
	0.01…25.00 m/s^2	Acceleration used in the evacuation mode.	100 = 1 m/s^2
25.89	EVAC MODE DEC	Defines the deceleration used when the evacuation mode is active.	0.20 m/s^2 / *Real*
	0.01…25.00 m/s^2	Deceleration used in the evacuation mode.	100 = 1 m/s^2
25.90	RELVL ACC/DEC	Defines the acceleration/deceleration used when the releveling mode is active.	0.40 m/s^2 / *Real*
	0.01…25.00 m/s^2	Acceleration/deceleration used in the releveling mode.	100 = 1 m/s^2
25.91	JERK DISABLE	Selects the source for enabling/disabling all the jerks defined with parameters *25.92* JERK1…*25.98* JERK7. 1 = All jerks are disabled and NOT USED. 0 = All jerks are enabled and used. For more information, see section *Jerk selection* on page *145*.	C.FALSE / *Bit pointer*
		Bit pointer: CONST or POINTER (See *Terms and abbreviations* on page *183*.)	

No.	Bit/Name/Value/ Range	Description	Def/Type FbEq (16b/32b)
25.92	JERK1	Defines the jerk used at the start of acceleration from zero speed to traveling speed when the start command is given.	1.00 m/s^3 / *Real*
	0.01…100.00 m/s^3	Jerk used at the start of acceleration.	100 = 1 m/s^3
25.93	JERK2	Defines the jerk used at the end of acceleration from zero speed to traveling speed when the start command is given.	1.00 m/s^3 / *Real*
	0.01…100.00 m/s^3	Jerk used at the end of acceleration.	100 = 1 m/s^3
25.94	JERK3	Defines the jerk used at the start of deceleration from traveling speed to leveling speed.	1.00 m/s^3 / *Real*
	0.01…100.00 m/s^3	Jerk used at the start of leveling deceleration.	100 = 1 m/s^3
25.95	JERK4	Defines the jerk used at the end of deceleration from traveling speed to leveling speed.	0.80 m/s^3 / *Real*
	0.01…100.00 m/s^3	Jerk used at the end of leveling deceleration.	100 = 1 m/s^3
25.96	JERK5	Defines the jerk used at the start of stopping deceleration when the stop command is given.	0.40 m/s^3 / *Real*
	0.01…100.00 m/s^3	Jerk used at the start of stopping deceleration.	100 = 1 m/s^3
25.97	JERK6	Defines the jerk used at the end of stopping deceleration when the stop command is given.	0.40 m/s^3 / *Real*
	0.01…100.00 m/s^3	Jerk used at the end of stopping deceleration.	100 = 1 m/s^3
25.98	JERK7	Defines the jerk used during releveling.	0.40 m/s^3 / *Real*
	0.01…100.00 m/s^3	Jerk used during releveling.	100 = 1 m/s^3

28 SPEED CONTROL		Speed controller settings.	
28.01	PROP GAIN 1	Defines the proportional gain of the speed controller in start.	10.00 / *Real*
	0.00...200.00	Proportional gain.	100 = 1 / -
28.02	INT TIME 1	Defines the integration time of the speed controller in start.	0.500 s / *Real*
	0.000...600.000 s	Integration time.	- / 100 = 1 s
28.03	PROP GAIN 2	Defines the proportional gain of the speed controller in high speed.	10.00 / *Real*
	0.00...200.00	Proportional gain.	100 = 1 / -

No.	Bit/Name/Value/ Range	Description	Def/Type FbEq (16b/32b)
28.04	INT TIME 2	Defines the integration time of the speed controller in high speed.	0.500 s / *Real*
	0.000...600.000 s	Integration time.	- / 100 = 1 s
28.05	PROP GAIN 3	Defines the proportional gain of the speed controller in stop.	10.00 / *Real*
	0.00...200.00	Proportional gain.	100 = 1 / -
28.06	INT TIME 3	Defines the integration time of the speed controller in stop.	0.500 s / *Real*
	0.000...600.000 s	Integration time.	- / 100 = 1 s
28.07	SWITCHOVER SPEED	Defines the switchover speed in percent of motor nominal speed between different speed controller settings. **Note**: If this value is set to 0.0, PROP GAIN 1 (par. *28.01*) and INT TIME 1 (par. *28.02*) are active.	0.0% / *Real*
	0.0...100.0%	Switchover speed.	10 = 1% / -
28.08	CAR WEIGHT	Defines the car weight.	0 kg / *Real*
	0...9999 kg	Car weight	1 = 1 kg
28.09	ROPE WEIGHT	Defines the rope weight.	0 kg / *Real*
	0...9999 kg	Rope weight	1 = 1 kg
28.10	COUNTER WEIGHT	Defines the counter weight.	0 kg / *Real*
	0...9999 kg	Counter weight	1 = 1 kg
28.11	INERTIA AUTO TUNE	Selects the auto tune method for inertia compensation.	DISABLED
	DISABLED	Auto tuning of inertia compensation is disabled.	0
	METHOD 1	Auto tuning of inertia compensation with method 1.	1
	METHOD 2	Auto tuning of inertia compensation with method 2.	2
28.12	MOMENT OF INERT	Defines the moment of inertia for lift system or lift load calculated during start-up.	0.00 kgm^2 / *enum*
	0.00...50.00 kgm^2	Moment of inertia.	100 = 1 kgm^2
28.80	ROLLBACK COMP TI	Defines the integration time for roll back compensation control. At start attempts to keep the car position when opening the brake to avoid roll back.	50 ms / *Real*
	10...100 ms	Integration time for roll back compensation.	1 = 1 ms
28.81	ROLLBACK MAX COR	Defines the maximum roll back correction in % of motor nominal speed.	7 % / *Real*
	0...15 %	Maximum roll back correction.	1 = 1 %

No.	Bit/Name/Value/ Range	Description	Def/Type FbEq (16b/32b)
28.82	ROLLBACK RAMP TM	Defines the ramp time to switch Off the Roll back compensation function.	0.5 s / *Real*
	0.0...1.0 s	Ramp time.	10 = 1 s

35 MECH BRAKE CTRL		Settings for the control of the mechanical brake, torque proving, brake slip, brake open torque and torque limiter while stopping. See also section *Mechanical brake control* on page *149*.	
35.01	BRAKE CONTROL	Enables the brake control function with or without monitoring. **Note:** This parameter cannot be changed while the drive is running.	ENABLE / *enum*
	DISABLE	Brake control function disabled	0
	ENABLE	Brake control function enabled.	1
	ENABLE1 NC	Brake control monitoring enabled using parameter *35.02* BRAKE MONITOR 1 normally closed input (that is *35.02*, 0 = Brake open, 1 = Brake closed)	2
	ENABLE2 NC	Brake control monitoring enabled using parameter *35.03* BRAKE MONITOR 2 normally closed input	3
	ENABLE1 NO	Brake control monitoring enabled using parameter *35.02* BRAKE MONITOR 1 normally open input (that is *35.02*, 0 = Brake closed, 1 = Brake open)	4
	ENABLE2 NO	Brake control monitoring enabled using parameter *35.03* BRAKE MONITOR 2 normally open input	5
	ENA1&2 NC	Brake control monitoring enabled using both *35.02* BRAKE MONITOR 1 and *35.03* BRAKE MONITOR 2 normally closed inputs.	6
	ENA1&2 NO	Brake control monitoring enabled using both *35.02* BRAKE MONITOR 1 and *35.03* BRAKE MONITOR 2 normally open inputs.	7

No.	Bit/Name/Value/ Range	Description	Def/Type FbEq (16b/32b)
35.02	BRAKE MONITOR 1	Selects the source 1 for activating external brake on/off supervision (when par. *35.01* BRAKE CONTROL = ENABLE 1 NC, ENABLE 1 NO, ENA 1&2 NC, ENA 1&2 NO). The use of the external on/off supervision signal is optional. • When parameter *35.01* BRAKE CONTROL = ENABLE 1 NO or ENA 1&2 NO, 1 = The brake is open, 0 = The brake is closed. • When parameter *35.01* BRAKE CONTROL = ENABLE 1 NC or ENA 1&2 NC, 1 = The brake is closed. 0 = The brake is open. Brake supervision is normally controlled with a digital input. It can also be controlled with an external control system, eg, fieldbus. When brake control error is detected the drive reacts as defined by parameter *35.08* BRAKE FAULT FUNC. **Note**: This parameter cannot be changed while the drive is running.	C.False / *Bit pointer*
		Bit pointer: CONST or POINTER (See *Terms and abbreviations* on page *183*.)	
35.03	BRAKE MONITOR 2	Selects the source 2 for activating external brake on/off supervision (when parameter *35.01* BRAKE CONTROL = ENABLE 2 NC, ENABLE 2 NO, ENA 1&2 NC, ENA 1&2 NO. The use of the external on/off supervision signal is optional. • When parameter *35.01* BRAKE CONTROL = ENABLE 2 NO or ENA 1&2 NO, 1 = The brake is open. 0 = The brake is closed. • When parameter *35.01* BRAKE CONTROL = ENABLE 2 NC or ENA 1&2 NC, 1 = The brake is closed. 0 = The brake is open. Brake supervision is normally controlled with a digital input. It can also be controlled with an external control system, eg, fieldbus. When brake control error is detected the drive reacts as defined by parameter *35.08* BRAKE FAULT FUNC. **Note**: This parameter cannot be changed while the drive is running.	C.False / *Bit pointer*
		Bit pointer: CONST or POINTER (See *Terms and abbreviations* on page *183*.)	

No.	Bit/Name/Value/ Range	Description	Def/Type FbEq (16b/32b)
35.04	BRAKE OPEN DELAY	Defines the brake open delay (= the delay between the internal open brake command and the release of the motor speed control). The delay counter starts when the drive has magnetised the motor and risen the motor torque to the level required at the brake release (parameter *35.07* BRK OPEN TRQ). Simultaneously with the counter start, the brake function energises the relay output controlling the brake and the brake starts opening. Set the delay the same as the mechanical opening delay of the brake specified by the brake manufacturer.	0.10 s / *UINT32*
	0.00…5.00 s	Brake open delay.	100 = 1 s / -
35.05	MODULATION DELAY	Defines the duration of modulation starting from reaching Brake close speed.	0.50 s / *UINT32*
	0.00…60.00 s	Modulation delay.	100 = 1 s / -
35.06	BRAKE CLOSE SPD	Defines the brake close speed (an absolute value). See parameter *35.09* BRAKE CLOSE DLY.	3.0 rpm/ *Real*
	0.0…1000.0 rpm	Brake close speed.	10 = 1 rpm / -
35.07	BRAKE OPEN TORQ	Defines the brake open torque value.	0.0% / *Real*
	-1000.0... 1000.0%	Constant brake open torque.	- / 10 = 1%
35.08	BRAKE FAULT FUNC	Defines how the drive reacts in case of a mechanical brake control error. If brake control supervision has not been activated by parameter *35.01* BRAKE CONTROL, this parameter is disabled.	FAULT / *enum*
	FAULT	The drive trips on fault BRAKE NOT CLOSED / BRAKE NOT OPEN if the status of the optional external brake monitoring signal does not meet the status presumed by the brake control function. The drive trips on fault BRAKE START TORQUE if the required motor starting torque at brake release is not achieved.	0
	ALARM	The drive generates alarm BRAKE NOT CLOSED / BRAKE NOT OPEN if the status of the optional external brake monitoring signal does not meet the status presumed by the brake control function. The drive generates alarm BRAKE START TORQUE if the required motor starting torque at brake release is not achieved.	1
	OPEN FLT	The drive generates fault BRAKE NOT CLOSED / BRAKE NOT OPEN if the status of the optional external brake monitoring signal does not match the status presumed by the brake control function. The drive trips on fault BRAKE START TORQUE if the required motor start torque at brake release is not achieved.	2

No.	Bit/Name/Value/ Range	Description	Def/Type FbEq (16b/32b)
35.09	BRAKE CLOSE DLY	Defines the brake close delay. The delay counter starts when the motor actual speed has fallen below the set level (parameter *35.06* BRAKE CLOSE SPD) after the drive has received the stop command. Simultaneously with the counter start, the brake control function de-energises the relay output controlling the brake and the brake starts closing. During the delay, the brake function keeps the motor live preventing the motor speed from falling below zero. Set the delay time to the same value as the mechanical make-up time of the brake (= operating delay when closing) specified by the brake manufacturer.	0.00 s / *UINT32*
	0.00…10.00 s	Brake close delay.	100 = 1 s / -
35.10	TORQ RAMP UP	Defines the brake open torque ramp up time. The torque limit (parameter *01.26 TORQ MAX LIM*) ramps up at this value against the closed brake.	0.00 s / *Real*
	0.00...5.00 s	Ramp up time.	100 = 1 s
35.11	TORQ RAMP DOWN	Defines the brake open torque ramp down time. The torque limit (parameter *01.26 TORQ MAX LIM*) ramps down at this value after the brake closed.	0.20 s / *Real*
	0.00...5.00 s	Ramp down time.	100 = 1 s
35.12	BRAKE CMD DELAY	Defines a delay time for the close command, that is the waiting time for brake closing and the close command.	0.00 s / *Real*
	0.00...5.00 s	Delay time.	100 = 1 s / -
35.80	BRK OPEN TRQ SEL	Selects the source of the brake open torque to be used. The source can be any of the following parameters: • *02.05* AI1 SCALED • *02.07* AI2 SCALED • *35.81* BRAKE OPEN TORQ	BRK OPEN TRQ / *enum*
		Value pointer (See *Val pointer* on page *184*)	
35.81	BRAKE OPEN TORQ	Defines the brake open torque value when selected as the source of parameter *35.80* BRK OPEN TRQ SEL.	0.0 % / *Real*
	0.0...300.0 %	Constant brake open torque.	10 = 1 %
35.82	TORQUE PROVING	Selects the Torque proving mode.	DISABLED / *enum*
	DISABLED	Torque proving function is disabled	0
	ENABLED	Torque proving function is enabled	1

No.	Bit/Name/Value/ Range	Description	Def/Type FbEq (16b/32b)
	> 30 min stby	Torque proving is enabled after 30 minutes of standby.	2
	> 1 hr stby	Torque proving is enabled after 1 hour of standby.	3
	> 90 min stby	Torque proving is enabled after 90 minutes of standby.	4
	> 2 hr stby	Torque proving is enabled after 2 hours of standby.	5
35.83	TRQ PROVING REF	Defines the torque proving reference. The Torque proving function compares the calculated actual torque of the drive with this reference value.	30.0 % / *Real*
	0.0...100.0 %	Torque proving reference in percentage of the motor nominal torque.	10 = 1 % / -
35.84	TRQ PROV FLT DLY	Defines the time delay for generating fault TORQUE PROVE. The drive trips on fault TORQUE PROVE if torque proving is not succeeded by the end of this period.	1.0 s / *Real*
	0.0...10.0 s	Time delay for generating fault TORQUE PROVE.	10 = 1 s
35.85	SLIP SPEED LIM	Defines the speed limit for the brake slip during torque proving. The drive trips on fault BRAKE SLIP if the actual lift speed exceeds this limit during torque proving and stays there for a longer period than defined with parameter *35.86* SLIP FAULT DELAY.	0.05 m/s / *Real*
	0.00...5.00 m/s	Brake slip speed limit in m/s,	100 = 1 m/s
35.86	SLIP FAULT DELAY	Defines the time delay for generating fault BRAKE SLIP.	0.5 s / *Real*
	0.0...10.0 s	Time delay for generating fault BRAKE SLIP,	10 = 1 s/ -

40 MOTOR CONTROL		Settings for motor control.	
40.80	SF REF	Defines the switching frequency of the drive.	8 / *enum*
	4	4 kHz	1
	5	5 kHz	2
	8	8 kHz	3
	12	12 kHz	4
40.81	TORQ BOOST HYST	Defines the hysteresis for Torque boost function. When drive is not able to produce requested current, the switching frequency reduces automatically.	20 % / *Real*
	0...50 %	Torque boost hysteresis	1 = 1

No.	Bit/Name/Value/ Range	Description	Def/Type FbEq (16b/32b)
46 FAULT FUNCTIONS		Settings for drive behaviour upon a fault situation. An alarm or a fault message indicates abnormal drive status. This parameter group also includes settings for thermal protection of the motor. See also section *Thermal motor protection* on page *158*.	
46.01	EXTERNAL FAULT	Selects an interface for an external fault signal. 0 = External fault trip. 1 = No external fault.	C.True/ *Bit pointer*
		Bit pointer: CONST or POINTER (See *Terms and abbreviations* on page *183*.)	1 = 1 / -
46.02	MOT PHASE LOSS	Selects how the drive reacts when a motor phase loss is detected.	Fault / *enum*
	No	No action.	0
	Fault	Drive trips on MOTOR PHASE fault.	1
46.03	EARTH FAULT	Selects how the drive reacts when an earth fault or current unbalance is detected in the motor or the motor cable.	Fault / *enum*
	No	No action.	0
	Warning	Drive generates alarm EARTH FAULT.	1
	Fault	Drive trips on EARTH FAULT.	2
46.04	SUPPL PHS LOSS	Selects how the drive reacts when a supply phase loss is detected.	Fault / *enum*
	No	No reaction.	0
	Fault	Drive trips on SUPPLY PHASE fault.	1
	Warning	Drive generates alarm SUPPL PHS LOSS.	2
46.05	STO DIAGNOSTIC	Selects how the drive reacts when it detects the absence of one or both Safe torque off (STO) signals. **Note:** This parameter is for supervision only. The Safe torque off function can activate even when this parameter is set to NO. For general information on the Safe torque off function, see the *Hardware manual* of the drive.	No / *enum*
	Fault	The drive trips on SAFE TORQUE OFF when one or both of the Safe torque off signals are lost.	1

No.	Bit/Name/Value/ Range	Description	Def/Type FbEq (16b/32b)
	Alarm	Drive running: The drive trips on SAFE TORQUE OFF when one or both of the STO signals is lost. Drive stopped: The drive generates a SAFE TORQUE OFF alarm if both STO signals are absent. If only one of the signals is lost, the drive trips on STO1 LOST or STO2 LOST.	2
	No	Drive running: The drive trips on SAFE TORQUE OFF when one or both of the STO signals is lost. Drive stopped: No action if both STO signals are absent. If only one of the signals is lost, the drive trips on STO1 LOST or STO2 LOST.	3
	Only Alarm	The drive generates a SAFE TORQUE OFF alarm if both STO signals are absent. If only one of the signals is lost, the drive trips on STO1 LOST or STO2 LOST.	4
46.06	CROSS CONNECTION	Selects how the drive reacts to an incorrect input power and motor cable connection (ie, an input power cable is connected to a drive motor connection).	Fault / *enum*
	No	No reaction.	0
	Fault	Drive trips on CABLE CROSS CON fault.	1
46.07	MOT TEMP PROT	Selects how the drive reacts when motor overtemperature is detected.	Fault / *enum*
	No	Inactive.	0
	Alarm	The drive generates alarm MOTOR TEMPERATURE when the temperature exceeds the alarm level defined by parameter *46.09* MOT TEMP ALM LIM.	1
	Fault	The drive generates alarm MOTOR TEMPERATURE or trips on fault MOTOR OVERTEMP when the temperature exceeds the alarm/fault level defined by parameter *46.09* MOT TEMP ALM LIM / *46.10* MOT TEMP FLT LIM.	2

No.	Bit/Name/Value/ Range	Description	Def/Type FbEq (16b/32b)
46.08	MOT TEMP SOURCE	Selects the motor temperature protection. When overtemperature is detected, the drive reacts as defined by parameter *46.07* MOT TEMP PROT. ***Note:** If one FEN-xx module is used, parameter setting must be either *KTY 1st FEN* or *PTC 1st FEN*. The FEN-xx module can be in either Slot 1 or Slot 2.	Estimated / *enum*
	Estimated	The temperature is supervised based on the motor thermal protection model and the ambient temperature. **WARNING!** The model does not protect the motor if it does not cool properly due to dust and dirt.	
	KTY JCU	The temperature is supervised using a KTY84 sensor connected to drive thermistor input TH.	1
	KTY 1st FEN	The temperature is supervised using a KTY84 sensor connected to encoder interface module FEN-xx installed in drive Slot 1/2. If two encoder interface modules are used, encoder module connected to Slot 1 is used for the temperature supervision. **Note:** This selection does not apply to FEN-01. *	2
	KTY 2nd FEN	The temperature is supervised using a KTY84 sensor connected to encoder interface module FEN-xx installed in drive Slot 1/2. If two encoder interface modules are used, encoder module connected to Slot 2 is used for the temperature supervision. **Note:** This selection does not apply to FEN-01. *	3
	PTC JCU	The temperature is supervised using 1…3 PTC sensors connected to drive thermistor input TH.	4
	PTC 1st FEN	The temperature is supervised using a PTC sensor connected to encoder interface module FEN-xx installed in drive Slot 1/2. If two encoder interface modules are used, encoder module connected to Slot 1 is used for the temperature supervision. *	5
	PTC 2nd FEN	The temperature is supervised using a PTC sensor connected to encoder interface module FEN-xx installed in drive Slot 1/2. If two encoder interface modules are used, encoder module connected to Slot 2 is used for the temperature supervision. *	6
46.09	MOT TEMP ALM LIM	Defines the alarm limit for motor overtemperature protection (when parameter *46.07* MOT TEMP PROT = *Alarm* / *Fault*).	90 °C/ *INT32*
	0…10000 °C	Motor overtemperature alarm limit.	1 = 1 °C / -

No.	Bit/Name/Value/ Range	Description	Def/Type FbEq (16b/32b)
46.10	MOT TEMP FLT LIM	Defines the fault limit for motor overtemperature protection (when parameter *46.07* MOT TEMP PROT = *Fault*).	110 °C/ *INT32*
	0…10000 °C	Motor overtemperature fault limit.	1 = 1 °C / -
46.80	FAULT RESET	Selects the source for the external fault reset signal. The signal resets the drive after a fault trip if the cause of the fault no longer exists. 1 = Fault reset.	DIO1 / *Bit pointer*
		Bit pointer: CONST or POINTER (See *Terms and abbreviations* on page *183*.)	
46.81	AUTORESET TRIALS	Defines the number of automatic fault resets the drive performs within the trial time defined with parameter *46.82* AUTORST TRL TIME. The faults to be reset are defined with parameter *46.84* AUTORESET SEL. For more information on the Automatic fault reset function, see section *Automatic fault reset* on page *133*.	3/ *UINT32*
	0…5	The number of the automatic fault resets allowed.	- / 1 = 1
46.82	AUTORST TRL TIME	Defines the time within which automatic fault resets are performed after the drive has tripped on a fault.	30.0 s/ *Real*
	1.0…600.0 s	Trial time for automatic fault resets.	- / 10 = 1 s
46.83	AUTORESET DELAY	Defines for how long the drive will wait after a fault before attempting an automatic fault reset.	1.0 s/ *Real*
	0.0…120.0 s	Resetting delay.	- / 10 = 1 s

No.	Bit/Name/Value/ Range	Description	Def/Type FbEq (16b/32b)
46.84	AUTORESET SEL	Selects the faults that are automatically reset. The parameter is a 16-bit word with each bit corresponding to a fault type. Whenever a bit is set to 1, the corresponding fault is automatically reset. The bits of the binary number correspond to the following faults monitored by *05.02* LIFT FW.	0x4000 / *Pb*

Bit	Fault
0	SPEED MATCH
1	TORQUE PROVE
2	BRAKE SLIP
3	MOTOR STALL
4…7	NOT USED
8	SHORT CIRCUIT
9	OVERCURRENT
10	OVERVOLTAGE
11	UNDERVOLTAGE
12	EXTERNAL FAULT
13	MOTOR PHASE LOSS
14	ALL FAULTS
15	NOT USED

	0x0000…0xFFFF	The faults that are automatically reset.	- / 1 = 1

47 VOLTAGE CTRL		Settings for undervoltage control, supply voltage and the low voltage mode.	
47.01	LOW VOLT MOD ENA	Selects a signal source that enables/disables the low voltage mode. 0 = Low voltage mode disabled, 1 = Low voltage mode enabled. See section *Rescue operation* on page *173*.	C.False/ *Bit pointer*
		Bit pointer: CONST or POINTER (See *Terms and abbreviations* on page *183*.)	- / 1 = 1
47.02	LOW VOLT DC MIN	Minimum DC voltage for the low voltage mode. See section *Rescue operation* on page *173*.	250.0 V / *Real*
	250.0…450.0 V	Minimum DC voltage for the low voltage mode.	1 = 1 V / -
47.03	LOW VOLT DC MAX	Maximum DC voltage for the low voltage mode. See section *Rescue operation* on page *173*. **Note:** The value of this parameter must be higher than (*47.02* LOW VOLT DC MIN + 50 V).	250.0 V / *Real*
	350.0…810.0 V	Maximum DC voltage for the low voltage mode.	1 = 1 V / -

No.	Bit/Name/Value/ Range	Description	Def/Type FbEq (16b/32b)
47.04	BATTERY SUPPLY	Selects a signal source that enables/disables external power unit supply, used with low DC supply voltages such as a battery. 0 = External power unit supply disabled, 1 = External power unit supply enabled. See section *Rescue operation* on page *173*.	C.False/ *Bit pointer*
		Bit pointer: CONST or POINTER (See *Terms and abbreviations* on page *183*.)	- / 1 = 1

48 BRAKE CHOPPER		Configuration of the internal brake chopper.	
48.01	BC ENABLE	Enables brake chopper control. **Note:** Before enabling brake chopper control, ensure that the brake resistor is installed. The drive has a built-in brake chopper.	Mode1/ *enum*
	Disable	Brake chopper control disabled.	0
	EnableTherm	Brake chopper control with resistor overload protection is enabled. Uses Mode1 selection in this parameter.	1
	Mode1	Pulse width modulation based control mode.	2
	Mode2	Hysteresis based control mode.	3
48.02	BRTHERMTIMECONST	Defines the thermal time constant of the brake resistor for overload protection.	0 s / *Real24*
	0…10000 s	Brake resistor thermal time constant.	- / 1 = 1 s
48.03	BR POWER MAX CNT	Defines the maximum continuous braking power which will raise the resistor temperature to the maximum allowed value. The value is used in the overload protection.	0.0 kW / *Real24*
	0.0…10000.0 kW	Maximum continuous braking power.	- / 10 = 1 kW
48.04	R BR	Defines the resistance value of the brake resistor. The value is used for brake chopper protection.	0.0 Ohm / *Real24*
	0.0… 1000.0 Ohm	Resistance.	- / 10 = 1 Ohm
48.05	BR TEMP FAULTLIM	Selects the fault limit for the brake resistor temperature supervision. The value is given in percent of the temperature the resistor reaches when loaded with the power defined by parameter *48.03* BR POWER MAX CNT. When the limit is exceeded, the drive trips on fault BR OVERHEAT.	105% / *Real24*
	0…150%	Resistor temperature fault limit.	1 = 1% / -

No.	Bit/Name/Value/ Range	Description	Def/Type FbEq (16b/32b)
48.06	BR TEMP ALARMLIM	Selects the alarm limit for the brake resistor temperature supervision. The value is given in percent of the temperature the resistor reaches when loaded with the power defined by parameter *48.03* BR POWER MAX CNT. When the limit is exceeded, the drive generates alarm BR OVERHEAT.	95% / *Real24*
	0…150%	Resistor temperature alarm limit.	1 = 1% / -

50 FIELDBUS		Basic settings for fieldbus communication. These parameters need to be set only if a fieldbus adapter module is installed.	
50.01	FBA ENABLE	Enables communication between the drive and fieldbus adapter.	Disable / *enum*
	Disable	No communication.	0
	Enable	Communication between drive and fieldbus adapter enabled.	1
50.02	COMM LOSS FUNC	Selects how the drive reacts in a fieldbus communication break. The time delay is defined by parameter *50.03* COMM LOSS T OUT.	No / *enum*
	No	Communication break detection disabled.	0
	Fault	Communication break detection active. Upon a communication break, the drive trips on fault FIELDBUS COMM and coasts to stop.	1
	Spd ref safe	Communication break detection active. Upon a communication break, the drive generates alarm FIELDBUS COMM and sets the speed. **WARNING!** In case of a communication break, make sure that it is safe to continue operation.	2
	Last speed	Communication break detection active. Upon a communication break, the drive generates alarm FIELDBUS COMM and freezes the speed to the level the drive was operating at. The speed is determined by the average speed over the previous 10 seconds. **WARNING**! In case of a communication break, make sure that it is safe to continue operation.	3

No.	Bit/Name/Value/ Range	Description	Def/Type FbEq (16b/32b)
50.03	COMM LOSS T OUT	Defines the time delay before the action defined by parameter *50.02* COMM LOSS FUNC is taken. Time count starts when the link fails to update the message.	0.3 s / *UINT32*
	0.3…6553.5 s	Delay for fieldbus communication loss function.	10 = 1 s / -
50.04	FBA REF1 MODESEL	Selects the fieldbus reference FBA REF1 scaling and the actual value, which is sent to the fieldbus (FBA ACT1).	Speed / *enum*
	Raw data	No scaling (ie, data is transmitted without scaling). The source for the actual value, which is sent to the fieldbus, is selected by parameter *50.06* FBA ACT1 TR SRC.	0
	Torque	Fieldbus adapter module uses torque reference scaling. Torque reference scaling is defined by the used fieldbus profile (eg, with ABB Drives Profile, integer value 10000 corresponds to 100% torque value). Signal *01.06* TORQUE is sent to the fieldbus as an actual value. See the *User's manual* of the appropriate fieldbus adapter module.	1
	Speed	Fieldbus adapter module uses speed reference scaling. Speed reference scaling is defined by the used fieldbus profile (eg, with ABB Drives Profile, integer value 20000 corresponds to the value of parameter *22.05* SPEED SCALING). Signal *01.01* SPEED ACT is sent to the fieldbus as an actual value. See the *User's manual* of the appropriate fieldbus adapter module.	2
50.05	FBA REF2 MODESEL	Selects the fieldbus reference FBA REF2 scaling.	Speed / *enum*
		See parameter *50.04* FBA REF1 MODESEL.	1 = 1 / -
50.06	FBA ACT1 TR SRC	Selects the source for fieldbus actual value 1 when parameter *50.04* FBA REF1 MODESEL / *50.05* FBA REF2 MODESEL is set to *Raw data*. See signal *01.01* SPEED ACT.	P.SPEED ACT/ *Val pointer*
		Value pointer (See *Terms and abbreviations* on page *183*.)	
50.07	FBA ACT2 TR SRC	Selects the source for fieldbus actual value 2 when parameter *50.04* FBA REF1 MODESEL / *50.05* FBA REF2 MODESEL is set to *Raw data*. See signal *01.06* TORQUE.	P.TORQUE/ *Val pointer*
		Value pointer (See *Terms and abbreviations* on page *183*.)	

No.	Bit/Name/Value/ Range	Description	Def/Type FbEq (16b/32b)
50.08	FBA SW B12 SRC	Selects the source for freely programmable fieldbus status word bit 28 (*02.11* FBA MAIN SW bit 28). Note that this functionality may not be supported by the fieldbus communication profile.	C.False / *Bit pointer*
		Bit pointer: CONST or POINTER (See *Terms and abbreviations* on page *183*.)	
50.09	FBA SW B13 SRC	Selects the source for freely programmable fieldbus status word bit 29 (*02.11* FBA MAIN SW bit 29). Note that this functionality may not be supported by the fieldbus communication profile.	C.False / *Bit pointer*
		Bit pointer: CONST or POINTER (See *Terms and abbreviations* on page *183*.)	
50.10	FBA SW B14 SRC	Selects the source for freely programmable fieldbus status word bit 30 (*02.11* FBA MAIN SW bit 30). Note that this functionality may not be supported by the fieldbus communication profile.	C.False / *Bit pointer*
		Bit pointer: CONST or POINTER (See *Terms and abbreviations* on page *183*.)	
50.11	FBA SW B15 SRC	Selects the source for freely programmable fieldbus status word bit 31 (*02.11* FBA MAIN SW bit 31). Note that this functionality may not be supported by the fieldbus communication profile.	C.False / *Bit pointer*
		Bit pointer: CONST or POINTER (See *Terms and abbreviations* on page *183*.)	
50.12	FBA CYCLE TIME	Selects the communication speed (cycle time) for the fieldbus interface.	Fast / *enum*
	Slow	The communication cycle time is 10 ms.	0
	Normal	The communication cycle time is 2 ms.	1
	Fast	The communication cycle time is 2 ms.	2
50.13	FBA MAIN SW FUNC	Status Word for fieldbus communication.	0b011 / *Pb*

Bit	Name	Value	Information
(continued)			
0	Run enable func		
1...2	Not used		

	0b000...0b111	Fieldbus main status function.	1 = 1

No.	Bit/Name/Value/ Range	Description	Def/Type FbEq (16b/32b)
51 FBA SETTINGS		Further fieldbus communication configuration. These parameters need to be set only if a fieldbus adapter module is installed.	
51.01	FBA TYPE	Shows the fieldbus protocol on the basis of the adapter module installed.	0 / *UINT32*
	PROFIBUS-DP		0
	CANOpen		1
	DEVICENET		2
	ETHERNET		3
	PROFInet IO		4
	EtherCAT		5
	ETH Pwrlink		6
	RS-485 COMM		7
	MACRO		8
	SERCOS		9
51.02	FBA PAR2	Parameters *51.02*…*51.26* are adapter module-specific. For more information, see the *User's manual* of the fieldbus adapter module. Note that not all of these parameters are necessarily used.	- / *UINT32*
...	...	...	...
51.26	FBA PAR26	See parameter *51.02* FBA PAR2.	- / *UINT32*
	0...65535		1 = 1
51.27	FBA PAR REFRESH	Validates any changed adapter module configuration parameter settings. After refreshing, the value reverts automatically to *DONE*. **Note:** This parameter cannot be changed while the drive is running.	DONE / *UINT32*
	DONE	Refreshing done.	0
	REFRESH	Refreshing.	1
51.28	PAR TABLE VER	Shows the parameter table revision of the fieldbus adapter module mapping file stored in the memory of the drive. In format xyz, where x = major revision number; y = minor revision number; z = correction number.	- / *UINT32*
	0x0000...0xFFFF	Parameter table revision.	1 = 1 / -

No.	Bit/Name/Value/ Range	Description	Def/Type FbEq (16b/32b)
51.29	DRIVE TYPE CODE	Shows the drive type code of the fieldbus adapter module mapping file stored in the memory of the drive.	- / *UINT32*
	0...65535	Drive type code of fieldbus adapter module mapping file.	1 = 1 / -
51.30	MAPPING FILE VER	Shows the fieldbus adapter module mapping file revision stored in the memory of the drive. In hexadecimal format. Example: 0x107 = revision 1.07.	- / *UINT32*
	0...65535	Mapping file revision.	1 = 1 / -
51.31	D2FBA COMM STA	Shows the status of the fieldbus adapter module communication.	IDLE / *UINT32*
	IDLE	Adapter not configured.	0
	EXEC. INIT	Adapter initializing.	1
	TIME OUT	A timeout has occurred in the communication between the adapter and the drive.	2
	CONFIG ERROR	Adapter configuration error – the major or minor revision code of the common program revision in the fieldbus adapter module is not the revision required by the module (see par. *51.32* FBA COMM SW VER), or mapping file upload has failed more than three times.	3
	OFF-LINE	Adapter is off-line.	4
	ON-LINE	Adapter is on-line.	5
	RESET	Adapter is performing a hardware reset.	6
51.32	FBA COMM SW VER	Shows the common program revision of the adapter module. In format axyz, where a = major revision number, xy = minor revision numbers. z = correction letter. Example: 190A = revision 1.90A.	- / *UINT32*
	0x0000...0xFFFF	Common program revision of the adapter module	1 = 1 / -
51.33	FBA APPL SW VER	Shows the application program revision of the adapter module. In format axyz, where: a = major revision number, xy = minor revision numbers, z = correction letter. Example: 190A = revision 1.90A.	- / *UINT32*
	0x0000...0xFFFF	Application program revision of the adapter module	1 = 1 / -

No.	Bit/Name/Value/ Range	Description	Def/Type FbEq (16b/32b)
52 FBA DATA IN		Selection of the data to be sent by the drive to the fieldbus controller. These parameters need to be set only if a fieldbus adapter module is installed.	
52.01	FBA DATA IN1	Selects data to be transferred from the drive to the fieldbus controller.	0 / *UINT32*
	0	NOT USED.	0
	4	Status Word (16 bits).	4
	5	Actual value 1 (16 bits).	5
	6	Actual value 2 (16 bits).	6
	14	Status Word (32 bits).	14
	15	Actual value 1 (32 bits).	15
	16	Actual value 2 (32 bits).	16
	101…9999	Parameter index.	101…9999
52.02	FBA DATA IN2	...	...
52.12	FBA DATA IN12	See *52.01* FBA DATA IN1.	- / *UINT32*

53 FBA DATA OUT		Selection of the data to be sent by the fieldbus controller to the drive. These parameters need to be set only if a fieldbus adapter module is installed.	
53.01	FBA DATA OUT1	Selects data to be transferred from the fieldbus controller to the drive.	0 / *UINT32*
	0	NOT USED.	0
	1	Control Word (16 bits).	1
	2	Reference REF1 (16 bits).	2
	3	Reference REF2 (16 bits).	3
	11	Control Word (32 bits).	11
	12	Reference REF1 (32 bits).	12
	13	Reference REF2 (32 bits).	13
	1001…9999	Parameter index.	1001… 9999
...	...	...	...
53.12	FBA DATAOUT12	See *53.01* DATA OUT1.	- / *UINT32*

58 EMBEDDED MODBUS		Configuration parameters for the embedded fieldbus (EFB) interface.	
58.01	PROTOCOL ENA SEL	Enables/disables the embedded fieldbus communication protocol.	DISABLED / *enum*
	DISABLED	Disabled.	0
	MODBUS RTU	Modbus RTU protocol enabled.	1

No.	Bit/Name/Value/ Range	Description	Def/Type FbEq (16b/32b)
58.03	NODE ADDRESS	Defines the node address.	1 / *Real*
	0…247	Node address.	1 = 1
58.04	BAUD RATE	Selects the baud rate of the RS-485 link.	9600 / *enum*
	4800	4.8 kbit/s.	0
	9600	9.6 kbit/s.	1
	19200	19.2 kbit/s.	2
	38400	38.4 kbit/s.	3
	57600	57.6 kbit/s.	4
	76800	76.8 kbit/s.	5
	115200	115.2 kbit/s.	6
58.05	PARITY	Selects the number of the data bits, the use and type of the parity bit, and the number of the stop bits.	8 NONE 1 / *enum*
	8 NONE 1	Eight data bits, no parity bit, one stop bit.	0
	8 NONE 2	Eight data bits, no parity bit, two stop bits.	1
	8 EVEN 1	Eight data bits, even parity bit, one stop bit.	2
	8 ODD 1	Eight data bits, odd parity bit, one stop bit.	3
58.06	CONTROL PROFILE	Selects the communication profile used by the Modbus protocol.	ABB ENHANCED / *enum*
	ABB CLASSIC	ABB Drives profile, classic version.	0
	ABB ENHANCED	ABB Drives profile, enhanced version.	1
	DCU 16-BIT	DCU 16-bit profile.	2
	DCU 32-BIT	DCU 32-bit profile.	3
58.07	COMM LOSS T OUT	Defines the timeout limit for EFB communication loss monitoring. If a communication break exceeds the timeout limit, the function proceeds with the action defined with parameter *58.09 COMM LOSS ACTION*. See also parameter *58.08* COMM LOSS MODE.	600 ms / *Real*
	0…60000 ms	Timeout calculation factor. The actual timeout value is calculated as follows: Comm loss timeout × 100 ms **Example:** If you set this value to 22, the actual timeout value will be: 22 × 100 ms = 2 200 ms.	100 = 1 ms
58.08	COMM LOSS MODE	Enables/disables EFB communication loss monitoring and defines which of the Modbus register accesses resets the timeout counter. See parameter *58.07* COMM LOSS T OUT.	NONE / *enum*
	NONE	EFB communication loss monitoring is disabled.	0

No.	Bit/Name/Value/ Range	Description	Def/Type FbEq (16b/32b)
	ANY MESSAGE	EFB communication loss monitoring is enabled. Any Modbus request resets the timeout counter.	1
	CTRL WRITE	EFB communication loss monitoring is enabled. Writing to control or reference word resets the timeout counter.	2
58.09	COMM LOSS ACTION	Defines the drive operation after the EFB communication loss monitoring awakes. See parameters *58.07* COMM LOSS T OUT and *58.08* COMM LOSS MODE.	NONE / *enum*
	NONE	No action.	0
	FAULT	Drive trips on a fault (EFB COMM LOSS).	1
	SAFE SPEED	Drive generates an alarm (EFB COMM LOSS) and takes the safe speed into use.	2
	LAST SPEED	Drive generates an alarm (EFB COMM LOSS) and takes the last speed into use (average over the previous 10 seconds).	3
58.10	REFRESH SETTINGS	Refreshes the settings of parameters *58.01*…*58.09* and *58.12*.	DONE / *enum*
	DONE	Initial value. The value is restored after the refresh is done.	0
	REFRESH	Refreshing.	1
58.11	REFERENCE SCALE	Defines the factor which the DCU 16-bit communication profile uses when scaling fieldbus references to drive references and drive actual values to fieldbus actual signals. The references are multiplied by this scaling factor. See section *Control through the embedded fieldbus interface: DCU 16-bit profile* on page *177*.	100 / *Real*
	1…65535	Scaling factor.	1 = 1
58.12	EFB COMM SPEED	Defines the communication speed (cycle time) for the embedded fieldbus interface. Any change in the setting must be validated by parameter *58.10* REFRESH SETTINGS.	LOW / *enum*
	LOW	The communication cycle time is 10 ms.	0
	HIGH	The communication cycle time is 2 ms.	1

No.	Bit/Name/Value/ Range	Description	Def/Type FbEq (16b/32b)
58.15	COMM DIAGNOSTICS	16-bit packed boolean data word for the communication diagnostics flag bits. Read-only.	0x0000 / *Pb*

Bit	Information
0	RESERVED.
1	NOTTHISNODEDATA (Last received packet was not for this node.)
2	RESERVED.
3	ONE OK PACKET (At least one packet is successfully received after the power up.)
4	RESERVED.
5	COMM TIMEOUT (Communication time-out has occurred.)
6...15	NOT USED.

	0x0000…0xFFFF	Data word (hex).	1 = 1
58.16	RECEIVED PACKETS	Shows the number of message packets received by the drive, including only such packets that are addressed to the drive. **Note:** The user can reset the counter (by setting the value to 0).	0 / *Real*
	0…65535	No. of message packets.	1 = 1
58.17	TRANSM PACKETS	Shows the number of message packets sent by the drive. **Note:** The user can reset the counter (by setting the value to 0).	0 / *Real*
	0…65535	No. of message packets.	1 = 1
58.18	ALL PACKETS	Shows the total number of message packets received by the drive, including all packets addressed to any valid node on the fieldbus link. **Note:** The user can reset the counter (by setting the value to 0).	0 / *Real*
	0…65535	No. of message packets.	1 = 1
58.19	UART ERRORS	Shows the number of messages with communication errors other than CRC errors received by the drive (example, UART buffer overflow errors). This parameter is read-only.	0 / *Real*
	0...65535	No. of messages with errors (excluding messages with CRC errors).	1 = 1
58.20	CRC ERRORS	Shows the number of messages with Cyclic Redundancy Check (CRC) received by the drive. This parameter is read-only. **Note:** High electromagnetic noise levels may generate errors.	0 / *Real*
	0…65535	No. of messages with CRC errors.	1 = 1

No.	Bit/Name/Value/ Range	Description	Def/Type FbEq (16b/32b)
58.21	RAW CW LSW	Shows the LSW part of the Control Word which the drive receives from the Modbus master. This parameter is read-only.	0x0000 / *Pb*
	0x0000…0xFFFF	Bits 0…15 of the Control word as a hex value.	1 = 1
58.22	RAW CW MSW	Shows the MSW part of the Control Word which the drive receives from the Modbus master. This parameter is read-only.	0x0000 / *Pb*
	0x0000…0xFFFF	Bits 16…32 of the Control word as a hex value.	1 = 1
58.23	RAW SW LSW	Shows the LSW part of the Status Word which the drive sends to the Modbus master. This parameter is read-only.	0x0000 / *Pb*
	0x0000…0xFFFF	Bits 0…15 of the Status word as a hex value.	1 = 1
58.24	RAW SW MSW	Shows the MSW part of the Status Word which the drive sends to the Modbus master. This parameter is read-only.	0x0000 / *Pb*
	0x0000…0xFFFF	Bits 16…32 of the Status word as a hex value.	1 = 1
58.25	RAW REF 1 LSW	Shows the LSW part of reference 1 which the drive receives from the Modbus master. This parameter is read-only.	0x0000 / *Pb*
	0x0000…0xFFFF	Bits 0…15 of reference 1 as a hex value.	1 = 1
58.26	RAW REF 1 MSW	Shows the MSW part of reference 1 which the drive receives from the Modbus master. This parameter is read-only.	0x0000 / *Pb*
	0x0000…0xFFFF	Bits 16…32 of reference 1 as a hex value.	1 = 1
58.27	RAW REF 2 LSW	Shows the LSW part of reference 2 which the drive receives from the Modbus master. This parameter is read-only.	0x0000 / *Pb*
	0x0000…0xFFFF	Bits 0…15 of reference 2 as a hex value.	1 = 1
58.28	RAW REF 2 MSW	Shows the MSW part of reference 2 which the drive receives from the Modbus master. This parameter is read-only.	0x0000 / *Pb*
	0x0000…0xFFFF	Bits 16…32 of reference 2 as a hex value.	1 = 1
58.30	TRANSMIT DELAY	Defines the delay time which the slave waits until it sends a response.	0x0000/ *Real*
	0…65335 ms	Transmit delay time.	1 = 1 ms
58.31	RET APP ERRORS	Selects the status of whether the drive returns the Modbus exception codes or not.	YES / *enum*
	NO	Not returned.	0
	YES	Drive returned the Modbus exception code.	1

No.	Bit/Name/Value/ Range	Description	Def/Type FbEq (16b/32b)
58.32	WORD ORDER	Defines the order of the data words in the Modbus frame.	LSW MSW / *enum*
	MSW LSW	Most significant word first, then Least significant word.	0
	LSW MSW	Least significant word first, then Most significant word.	1
58.35	DATA I/O 1	Defines the address of the drive parameter which the Modbus master accesses when it reads from or writes to the register address corresponding to Modbus In/Out parameter no. 1. The Modbus master defines the type of the data (input or output). The value is conveyed in a Modbus frame using two 16-bit words. If the drive parameter is a 16-bit value, the LSW (Least significant word) conveys the value. If the drive parameter is a 32-bit value, the next Modbus In/Out parameter is also RESERVED.	- / *Real*
	0…9999	Parameter address. Format: xxyy, where: xx = parameter group yy = parameter index	1 = 1
58.36	DATA I/O 2	See parameter *58.35*.	- / *Real*
	0…9999	See parameter *58.35*.	1 = 1
…	…	…	…
58.58	DATA I/O 24	See parameter *58.35*.	- / *Real*
	0…9999	See parameter *58.35*.	1 = 1
72 INTERNALLY USED		Internally used. Cannot be set by the user.	
72.01	JOG1 START	Internally used. Cannot be set by the user.	
72.02	FAULT RESET SEL	Internally used. Cannot be set by the user.	
72.03	EM STOP OFF3	Internally used. Cannot be set by the user.	
72.04	FB CW USED	Selects the source for the control word when fieldbus (FBA) is selected as the start and stop control location (see parameter *10.01* START FUNC). By default, the source is from parameter *02.10* FBA MAIN CW. **Note:** This parameter cannot be changed while the drive is running.	P.FBA MAIN CW/ *Val pointer*
		Value pointer (See *Terms and abbreviations* on page *184*.)	
72.05	JOG2 START	Internally used. Cannot be set by the user.	
72.06	JOG ENABLE	Internally used. Cannot be set by the user.	
72.07	START ENABLE	Internally used. Cannot be set by the user.	

No.	Bit/Name/Value/ Range	Description	Def/Type FbEq (16b/32b)
72.08	POS SPEED ENA	Internally used. Cannot be set by the user.	
72.09	NEG SPEED ENA	Internally used. Cannot be set by the user.	
72.10	SPEED RAMP IN	Internally used. Cannot be set by the user.	
72.11	SPEED ERR NCTRL	Internally used. Cannot be set by the user.	
72.12	ACC COMPENSATION	Internally used. Cannot be set by the user.	
72.13	BRAKE OPEN HOLD	Internally used. Cannot be set by the user.	
72.14	SF REF	Internally used. Cannot be set by the user.	
72.15	LOAD GEAR MUL	Internally used. Cannot be set by the user.	
72.16	LOAD GEAR DIV	Internally used. Cannot be set by the user.	
72.17	FEED CONST NUM	Internally used. Cannot be set by the user.	
72.18	FEED CONST DEN	Internally used. Cannot be set by the user.	
72.19	SPEED REF1 IN	Internally used. Cannot be set by the user.	
72.20	SPEED REF2 IN	Internally used. Cannot be set by the user.	
72.21	SPEED REF JOG1	Internally used. Cannot be set by the user.	
72.21	SPEED REF JOG1	Internally used. Cannot be set by the user.	
72.22	SPEED REF JOG2	Internally used. Cannot be set by the user.	
72.23	ACC TIME	Internally used. Cannot be set by the user.	
72.24	DEC TIME	Internally used. Cannot be set by the user.	
72.25	SHAPE TIME ACC1	Internally used. Cannot be set by the user.	
72.26	SHAPE TIME ACC2	Internally used. Cannot be set by the user.	
72.27	SHAPE TIME DEC1	Internally used. Cannot be set by the user.	
72.28	SHAPE TIME DEC2	Internally used. Cannot be set by the user.	
72.29	ACC TIME JOGGING	Internally used. Cannot be set by the user.	
72.30	DEC TIME JOGGING	Internally used. Cannot be set by the user.	
72.31	OVERVOLTAGE CTRL	Internally used. Cannot be set by the user.	
72.32	POS2INT SCALE	Internally used. Cannot be set by the user.	

80 SPEED REFERENCE		Parameters related to speed reference selection and scaling. See also section *Speed reference selection and scaling* on page *137*.	
80.01	NOMINAL SPEED	Defines the nominal speed reference used in the normal travel mode. See also parameter *22.05* SPEED SCALING.	1.00 m/s / *Real*
	0.00…25.00 m/s	Nominal speed.	100 = 1 m/s

No.	Bit/Name/Value/ Range	Description	Def/Type FbEq (16b/32b)
80.02	GEAR RATIO	Defines the gear box ratio used in m/s to rpm conversions and vice versa.	1.000 / *Real*
	0.001…1000.000	Gear box ratio.	1000 = 1
80.03	SHEAVE DIAMETER	Defines the sheave diameter of the lift system	500 mm
	1…2000 mm	Sheave diameter in millimeters.	1 = 1 mm
80.04	ROPING RATIO	Defines the roping ratio of the lift system.	1/ *Real*
	1…8	System roping ratio.	1 = 1
80.05	SPEED REF MODE	Selects the speed reference mode. See also section *Speed reference selection and scaling* on page *137*.	MULTIPLE/ *enum*
	MULTIPLE	Used for multiple speed references. Up to eight separate preset speed references can be programmed to the drive using parameters in this group and can be selected using binary coded digital inputs.	0
	SEP HIGH PRI	Used when high speed reference has priority. Up to seven different speeds can be programmed to the drive and can be selected using dedicated digital inputs. Each speed reference takes priority over the leveling speed.	1
	SEP LEVL PRI	Used when leveling speed reference has priority. Up to seven different speeds can be programmed to the drive and can be selected using dedicated digital inputs. The leveling speed reference, takes priority over all other speed references when enabled through one of the digital input terminals.	2
80.06	SPEED REF SEL1	Selects the source for speed reference selection pointer 1. The bit combination of parameters *80.06*, *80.07*, *80.08* and *80.09* determines the speed reference when neither the evacuation mode nor the inspection mode is active.	DI4/ *Bit pointer*
		Bit pointer: CONST or POINTER (See *Terms and abbreviations* on page *183*.)	
80.07	SPEED REF SEL2	Selects the source for speed reference selection pointer 2. The bit combination of parameters *80.06*, *80.07*, *80.08* and *80.09* determines the speed reference when neither the evacuation mode nor the inspection mode is active.	DI5/ *Bit pointer*
		Bit pointer: CONST or POINTER (See *Terms and abbreviations* on page *183*.)	

No.	Bit/Name/Value/ Range	Description	Def/Type FbEq (16b/32b)
80.08	SPEED REF SEL3	Selects the source for speed reference selection pointer 3. The bit combination of parameters *80.06*, *80.07*, *80.08* and *80.09* determines the speed reference when neither the evacuation mode nor the inspection mode is active.	DI6/ *Bit pointer*
		Bit pointer: CONST or POINTER (See *Terms and abbreviations* on page *183*.)	
80.09	SPEED REF SEL4	Selects the source for speed reference selection pointer 4. The bit combination of parameters *80.06*, *80.07*, *80.08* and *80.09* determines the speed reference when neither the evacuation mode nor the inspection mode is active.	NOT USED/ *Bit pointer*
		Bit pointer: CONST or POINTER (See *Terms and abbreviations* on page *183*.)	
80.10	SPEED1	A factory-set zero speed reference (0 m/s) to be used when the bit combination of parameters *80.06*, *80.07* and *80.08* is 000. Can be used for stopping the lift in the normal travel mode. Cannot be set by the user. This parameter is read-only.	0.00 m/s / *Real*
	0.00...25.00 m/s	Speed reference	100 = 1 m/s
80.11	LEVELING SPEED	Defines the speed reference to be used during leveling, ie, when the bit combination of parameters *80.06*, *80.07* and *80.08* is 110. When the floor switch is hit, the drive decelerates to the leveling speed.	0.25 m/s / *Real*
	0.00…25.00 m/s	Leveling speed reference.	100 = 1 m/s
80.12	RELVL SPEED SEL	Selects the source of the speed reference to be used in the releveling mode. If the lift overshoots the floor level, it is driven back to the floor level using the releveling mode.	PAR 80.13 / *enum*
	PAR 80.13	Parameter *80.13* RELEVELING SPEED selected as the source of the releveling speed reference.	0
	AI1 SCALED	AI1 signal (*02.05* AI1 SCALED) selected as the source of the releveling speed reference.	1
	AI2 SCALED	AI2 signal (*02.07* AI2 SCALED) selected as the source of the releveling speed reference.	2
80.13	RELEVELING SPEED	Defines the speed reference to be used in the releveling mode when selected as the source of parameter *80.12* RELVL SPEED SEL. Used when the bit combination of parameters *80.06*, *80.07* and *80.08* is 001.	0.10 m/s / *Real*
	0.00…25.00 m/s	Releveling speed reference.	100 = 1 m/s

No.	Bit/Name/Value/ Range	Description	Def/Type FbEq (16b/32b)
80.14	MEDIUM SPEED	Defines the speed reference to be used in the normal travel mode when the bit combination of parameters *80.06*, *80.07* and *80.08* is 010. This is an additional speed reference which can be defined to be used instead of the nominal speed based on the floor distance.	0.50 m/s / *Real*
	0.00…25.00 m/s	Medium speed reference.	100 = 1 m/s
80.15	INSPECTION SPEED	Defines the speed reference to be used when the inspection mode is enabled with parameter *10.84* INSPECTION MODE. If the inspection mode is not in use, this speed reference can also be defined to be used in the normal travel mode when the bit combination of parameters *80.06*, *80.07* and *80.08* is 101.	0.25 m/s / *Real*
	0.00…25.00 m/s	Inspection speed reference.	100 = 1 m/s
80.16	EVACUATION SPEED	Defines the speed reference to be used when the evacuation mode is enabled with parameter *10.81* EVACUATION MODE.	0.10 m/s / *Real*
	0.00…25.00 m/s	Evacuation speed reference.	100 = 1 m/s
80.17	SPEED2	Defines the speed reference to be used in the normal travel mode when the bit combination of parameters *80.06*, *80.07* and *80.08* is 001. This is an additional speed reference which can be defined to be used instead of the nominal speed based on the floor distance.	0.40 m/s / *Real*
	0.00…25.00 m/s	Speed2.	100 = 1 m/s
80.18	SPEED3	Defines the speed reference to be used in the normal travel mode when the bit combination of parameters *80.06*, *80.07* and *80.08* is 001. This is an additional speed reference which can be defined to be used instead of the nominal speed based on the floor distance.	0.60 m/s / *Real*
	0.00…25.00 m/s	Speed3.	100 = 1 m/s
80.19	OFF DLY SPD LIM	Defines the lift speed limit for activating the extended off-delay time periods defined with parameters *80.20* …*80.23*. The delay periods are used only when the lift speed is lower than this limit.	0.00 m/s / *Real*
	0.00…25.00 m/s	Off-delay speed limit.	100 = 1 m/s

No.	Bit/Name/Value/ Range	Description	Def/Type FbEq (16b/32b)
80.20	SPEED2 OFF DLY	Defines the time period for extending the speed2 reference (parameter *80.17* SPEED2). Speed2 is used further for the duration of this time period, even if it was deactivated by the speed reference selection bits.	0.0 s / *Real*
	0.0…5.0 s	Speed2 off-delay.	10 = 1 s
80.21	MED SPD OFF DLY	Defines the time period for extending the medium speed reference (parameter *80.14* MEDIUM SPEED). The medium speed reference is used further for the duration of this time period, even if it was deactivated by the speed reference selection bits.	0.0 s / *Real*
	0.0…5.0 s	Medium speed off-delay.	10 = 1 s
80.22	NOM SPD OFF DLY	Defines the time period for extending the nominal speed reference (parameter *72.01* NOMINAL SPEED). The nominal speed reference is used further for the duration of this time period, even if it was deactivated by the speed reference selection bits.	0.0 s / *Real*
	0.0…5.0 s	Nominal speed off-delay.	10 = 1 s
80.23	SPEED3 OFF DLY	Defines the time period for extending the speed3 reference (parameter *80.18* SPEED3). Speed3 is used further for the duration of this time period, even if it was deactivated by the speed reference selection bits.	0.0 s / *Real*
	0.0…5.0 s	Speed3 off-delay.	10 = 1 s
81 SUPERVISION		Parameters related to speed match, motor stall and leveling overtime stop. See also section *Protection functions* on page *155*.	
81.01	SPEED MATCH		DISABLED / *enum*
	DISABLED	Speed match function disabled.	0
	ENABLED	Speed match function enabled.	1
81.02	SPD STD DEV LVL	Defines the absolute speed deviation level for the steady state. See also parameter *81.04* SPEED MATCH DLY.	0.10 m/s / *Real*
	0.00…10.00 m/s	Steady state speed deviation level.	100 = 1 m/s
81.03	SPD RMP DEV LVL	Defines the absolute speed deviation level for the ramp state (during acceleration/deceleration). See also parameter *81.04* SPEED MATCH DLY.	0.20 m/s / *Real*
	0.00…10.00 m/s	Ramp state speed deviation level.	100 = 1 m/s

No.	Bit/Name/Value/ Range	Description	Def/Type FbEq (16b/32b)
81.04	SPEED MATCH DLY	Defines the time delay for generating fault SPEED MATCH. The fault is generated when the speed error is higher than defined with parameter *81.02* SPD STD DEV LVL in the steady state or defined with parameter *81.03* SPD RMP DEV LVL in the ramp state, and the time delay defined with this parameter has elapsed.	1.0 s / *Real*
	0.0…10.0 s	Time delay for generating fault SPEED MATCH.	10 = 1 s
81.05	STALL TORQ MAX	Defines the maximum torque limit for generating fault MOTOR STALL. If the torque actual (*01.06* TORQUE) is greater than this value and the motor actual speed is lower than the value defined with parameter *81.07* STALL SPEED LIM, fault MOTOR STALL is generated after the period defined with parameter *81.08* STALL FAULT DLY.	70.0 %
	0.0…250.0%	Maximum torque limit for generating fault MOTOR STALL.	10 = 1%
81.06	STALL TORQ MIN	Defines the minimum torque limit for generating fault MOTOR STALL. If the torque actual (*01.06* TORQUE) is smaller than this value and the motor actual speed is lower than the value defined with parameter *81.07* STALL SPEED LIM, fault MOTOR STALL is generated after the period defined with parameter *81.08* STALL FAULT DLY.	-70.0 %
	-250.0…0.0%	Minimum torque limit for generating fault MOTOR STALL.	10 = 1%
81.07	STALL SPEED LIM	Defines the speed limit for the Motor stall function. Fault MOTOR STALL is generated when the motor actual speed (*01.01* SPEED ACT) is lower than this value, the drive has exceeded the torque limits defined with parameters *81.05* STALL TORQ MAX and *81.06* STALL TORQ MIN, and the time delay defined with *81.08* STALL FAULT DLY has elapsed. The Motor stall function is enabled when the value of this parameter is > 0.	0.00 m/s / *Real*
	0.00…25.00 m/s	Speed limit for the Motor stall function.	100 = 1 m/s
81.08	STALL FAULT DLY	Defines the time delay for generating fault MOTOR STALL when the drive has exceeded the maximum or minimum torque limits defined with parameters *81.05* STALL TORQ MAX and *81.06* STALL TORQ MIN LIM.	2.0 s / *Real*
	0.0…5.0 s	Time delay for generating fault MOTOR STALL.	10 = 1 s

No.	Bit/Name/Value/ Range	Description	Def/Type FbEq (16b/32b)
81.09	LVL MAX TIME	Defines the maximum time the drive can run at the leveling speed. If the stop command has not been received before this time period elapses, the Leveling overtime stop function activates an emergency stop command (OFF3). The function is enabled when the value of this parameter is > 0.	0.0 s / *Real*
	0.0…25.0 s	Maximum leveling time for the Leveling overtime stop function.	10 = 1 s

82 SMART SLOWDOWN		Parameters related to the Smart slowdown function. See also section *Smart slowdown* on page *147*.	
82.01	SMART SLOWDN SEL	Enables/disables the Smart slowdown function.	NOT SEL / *enum*
	NOT SEL	Smart slowdown function is not enabled.	0
	ESTIMATED	Smart slowdown function is enabled with the estimated speed. The distance traveled is calculated by integrating the actual speed.	1
	ENCODER	Smart slowdown function is enabled with an encoder. The distance traveled is based on the actual position of the encoder (*01.10* POS ACT).	2
82.02	LV STOP SWC DIST	Defines the distance between leveling and stopping switches.	0.00 m / *Real*
	0.00…100.00 m	Distance between leveling and stopping switches.	100 = 1 m
82.03	SAFETY MARGIN	Defines what percentage of parameter *82.02* is used as the safety distance when the Smart slowdown function is enabled. Safety distance is the distance which must be run with the steady state leveling speed.	0.00 % / *Real*
	0.00…100.00%	Safety margin in percentages.	100 = 1%

90 ENC MODULE SEL		Settings for encoder activation, emulation, TTL echo, and communication fault detection.	
90.01	ENCODER SEL	Activates the communication to optional encoder/resolver interface.	None / *enum*
	None	Inactive.	0
	FEN-01 TTL+	Communication active. Module type: FEN-01 TTL Encoder interface Module. Input: TTL encoder input with commutation support (X32). See parameter group *93 PULSE ENC CONF*.	1
	FEN-01 TTL	Communication active. Module type: FEN-01 TTL Encoder interface Module. Input: TTL encoder input (X31). See parameter group *93 PULSE ENC CONF*.	2

No.	Bit/Name/Value/ Range	Description	Def/Type FbEq (16b/32b)
	FEN-11 ABS	Communication active. Module type: FEN-11 Absolute Encoder Interface. Input: Absolute encoder input (X42). See parameter group *91 ABSOL ENC CONF*.	3
	FEN-11 TTL	Communication active. Module type: FEN-11 Absolute Encoder Interface. Input: TTL encoder input (X41). See parameter group *93 PULSE ENC CONF*.	4
	FEN-21 RES	Communication active. Module type: FEN-21 Resolver Interface. Input: Resolver input (X52). See parameter group *92 RESOLVER CONF*.	5
	FEN-21 TTL	Communication active. Module type: FEN-21 Resolver Interface. Input: TTL encoder input (X51). See parameter group *93 PULSE ENC CONF*.	6
	FEN-31 HTL	Communication active. Module type: FEN-31 HTL Encoder Interface. Input: HTL encoder input (X82). See parameter group *93 PULSE ENC CONF*.	7

No.	Bit/Name/Value/ Range	Description	Def/Type FbEq (16b/32b)
90.02	EMUL MODE SEL	Enables encoder emulation and selects the position value and the TTL output used in the emulation process. In encoder emulation, a calculated position difference is transformed to a corresponding number of TTL pulses to be transmitted via the TTL output. The position difference is the difference between the latest and the previous position values. The position value used in emulation can be either a position determined by the drive software or a position measured by an encoder. If the drive software position is used, the source for the used position is selected by parameter *93.08* EMUL POS REF. Because the software causes a delay, it is recommended that the actual position is always taken from an encoder. Drive software is recommended to be used only with position reference emulation. Encoder emulation can be used to increase or decrease the pulse number when TTL encoder data is transmitted via the TTL output, for example, to another drive. If the pulse number requires no alternation, use encoder echo for data transformation. See parameter *90.03* TTL ECHO SEL. **Note:** If encoder emulation and echo are enabled for the same FEN-xx TTL output, the emulation overrides the echo. If an encoder input is selected as the emulation source, the corresponding selection must be activated with parameter *90.01* ENCODER SEL. The TTL encoder pulse number used in emulation must be defined by parameter *93.07* EMUL PULSE NR. See parameter group *93 PULSE ENC CONF*.	Disabled / *enum*
	Disabled	Emulation disabled.	0
	FEN-01 SWref	Module type: FEN-01 TTL Encoder interface Module. Emulation: Drive software position (source selected by par. *93.08* EMUL POS REF) is emulated to FEN-01 TTL output.	1
	FEN-01 TTL+	Module type: FEN-01 TTL Encoder interface Module. Emulation: FEN-01 TTL encoder input (X32) position is emulated to FEN-01 TTL output.	2
	FEN-01 TTL	Module type: FEN-01 TTL Encoder interface Module. Emulation: FEN-01 TTL encoder input (X31) position is emulated to FEN-01 TTL output.	3

No.	Bit/Name/Value/ Range	Description	Def/Type FbEq (16b/32b)
	FEN-11 SWref	Module type: FEN-11 Absolute Encoder Interface. Emulation: Drive software position (source selected by par. *93.08* EMUL POS REF) is emulated to FEN-11 TTL output.	4
	FEN-11 ABS	Module type: FEN-11 Absolute Encoder Interface. Emulation: FEN-11 absolute encoder input (X42) position is emulated to FEN-11 TTL output.	5
	FEN-11 TTL	Module type: FEN-11 Absolute Encoder Interface. Emulation: FEN-11 TTL encoder input (X41) position is emulated to FEN-11 TTL output.	6
	FEN-21 SWref	Module type: FEN-21 Resolver Interface. Emulation: Drive software position (source selected by par. *93.08* EMUL POS REF) is emulated to FEN-21 TTL output.	7
	FEN-21 RES	Module type: FEN-21 Resolver Interface. Emulation: FEN-21 resolver input (X52) position is emulated to FEN-21 TTL output.	8
	FEN-21 TTL	Module type: FEN-21 Resolver Interface. Emulation: FEN-21 TTL encoder input (X51) position is emulated to FEN-21 TTL output.	9
	FEN-31 SWref	Module type: FEN-31 HTL Encoder Interface. Emulation: Drive software position (source selected by par. *93.08* EMUL POS REF) is emulated to FEN-31 TTL output.	10
	FEN-31 HTL	Module type: FEN-31 HTL Encoder Interface. Emulation: FEN-31 HTL encoder input (X82) position is emulated to FEN-31 TTL output.	11
90.03	TTL ECHO SEL	Enables and selects the interface for the TTL encoder signal echo. **Note:** If encoder emulation and echo are enabled for the same FEN-xx TTL output, the emulation overrides the echo.	Disabled / *enum*
	Disabled	TTL echo disabled.	0
	FEN-01 TTL+	Module type: FEN-01 TTL Encoder Interface. Echo: TTL encoder input (X32) pulses are echoed to the TTL output.	1
	FEN-01 TTL	Module type: FEN-01 TTL Encoder Interface. Echo: TTL encoder input (X31) pulses are echoed to the TTL output.	2
	FEN-11 TTL	Module type: FEN-11 Absolute Encoder Interface. Echo: TTL encoder input (X41) pulses are echoed to the TTL output.	3

No.	Bit/Name/Value/ Range	Description	Def/Type FbEq (16b/32b)
	FEN-21 TTL	Module type: FEN-21 Resolver Interface. Echo: TTL encoder input (X51) pulses are echoed to the TTL output.	4
	FEN-31 HTL	Module type: FEN-31 HTL Encoder Interface. Echo: HTL encoder input (X82) pulses are echoed to the TTL output.	5
90.04	ENC CABLE FAULT	Selects the action in case an encoder cable fault is detected by the FEN-xx encoder interface. **Notes**: At the time of printing, this functionality is only available with the absolute encoder input of the FEN-11 based on sine/cosine incremental signals, and with the HTL input of the FEN-31. When the encoder input is used for speed feedback (see *22.01* SPEED FB SEL), this parameter may be overridden by parameter *22.03* SPEED FB FAULT.	Fault/ *UINT32*
	No	Cable fault detection inactive.	0
	Fault	The drive trips on an ENCODER CABLE fault.	1
	Warning	The drive generates an ENCODER CABLE warning. This is the recommended setting if the maximum pulse frequency of sine/cosine incremental signals exceeds 100 kHz; at high frequencies, the signals may attenuate enough to invoke the function. The maximum pulse frequency can be calculated as follows: $\frac{\text{Pulses per revolution (par. 91.01)} \times \text{Maximum speed in rpm}}{60}$	2
90.05	INVERT ENC SIG	Defines the encoder signal inversion.	No/ *enum*
	No	No encoder signal inversion.	0
	Enc	Encoder signal inverted, that is encoder rotation direction is changed.	1
90.06	ENC PAR REFRESH	Setting this parameter to 1 forces a reconfiguration of the FEN-xx interfaces, which is needed for any parameter changes in groups 90…93 to take effect. **Note:** This parameter cannot be changed while the drive is running.	Done/ *UINT32*
	Done	Refreshing done.	0
	Configure	Reconfigure. The value will automatically revert to DONE.	1

No.	Bit/Name/Value/ Range	Description	Def/Type FbEq (16b/32b)
91 ABSOL ENC CONF		Absolute encoder configuration; used when parameter *90.01* ENCODER SEL is set to *FEN-11 ABS*.	
91.01	SINE COSINE NR	Defines the number of sine/cosine wave cycles within one revolution. **Note:** This parameter does not need to be set when EnDat or SSI encoders are used in the continuous mode. See parameter *91.15* SSI MODE / *91.18* ENDAT MODE.	0/ *UINT32*
	0…65535	Number of sine/cosine wave cycles within one revolution.	1 = 1 / -
91.02	ABS ENC INTERF	Selects the source for the encoder absolute position.	None/ *enum*
	None	Not selected.	0
	Commut sig	Commutation signals.	1
	EnDat	Serial interface: EnDat encoder.	2
	Hiperface	Serial interface: HIPERFACE encoder.	3
	SSI	Serial interface: SSI encoder.	4
	Tamag. 17/33b	Serial interface: Tamagawa 17/33-bit encoder.	5
91.03	REV COUNT BITS	Defines the number of bits used in revolution counting with multiturn encoders. Used when parameter *91.02* ABS ENC INTERF is set to *EnDat*, *Hiperface*, or *SSI*. When parameter *91.02* is set to *Tamag. 17/33b*, setting this parameter to a non-zero value activates multiturn data requesting.	0/ *UINT32*
	0…32	Number of bits used in revolution count. Eg, 4096 revolutions => 12 bits.	1 = 1 / -
91.04	POS DATA BITS	Defines the number of bits used within one revolution when parameter *91.02* ABS ENC INTERF is set to *EnDat*, *Hiperface*, or *SSI*. When parameter *91.02* is set to *Tamag. 17/33b*, this parameter is internally set to 17.	0/ *UINT32*
	0…32	Number of bits used within one revolution. Eg, 32768 positions per revolution => 15 bits.	1 = 1 / -

No.	Bit/Name/Value/ Range	Description	Def/Type FbEq (16b/32b)
91.05	REFMARK ENA	Enables the encoder zero pulse for the absolute encoder input (X42) of an FEN-11 module (if present). Zero pulse can be used for position latching. **Note:** With serial interfaces (that is, when parameter *91.02* ABS ENC INTERF is set to *EnDat*, *Hiperface*, *SSI* or *Tamag. 17/33b*), the zero pulse does not exist.	FALSE/ *UINT32*
	FALSE	Zero pulse disabled.	0
	TRUE	Zero pulse enabled.	1
91.06	ABS POS TRACKING	Enables absolute position tracking.	Disable/ *UINT32*
	Disable	Absolute position tracking disabled.	0
	Enable	Absolute position tracking enabled.	1
91.07	HIPERFACE PARITY	Defines the use of parity and stop bit(s) for HIPERFACE encoder (when parameter *91.02* ABS ENC INTERF is set to *Hiperface*). Typically this parameter does not need to be set.	Odd/ *UINT32*
	Odd	Odd parity indication bit, one stop bit.	0
	Even	Even parity indication bit, one stop bit.	1
91.08	HIPERF BAUDRATE	Defines the transfer rate of the link for HIPERFACE encoder (when parameter *91.02* ABS ENC INTERF is set to *Hiperface*). Typically this parameter does not need to be set.	9600/ *UINT32*
	4800	4800 bits/s.	0
	9600	9600 bits/s.	1
	19200	19200 bits/s.	2
	38400	38400 bits/s.	3
91.09	HIPERF NODE ADDR	Defines the node address for HIPERFACE encoder (when parameter *91.02* ABS ENC INTERF is set to *Hiperface*). Typically this parameter does not need to be set.	64/ *UINT32*
	0…255	HIPERFACE encoder node address.	1 = 1 / -
91.10	SSI CLOCK CYCLES	Defines the length of the SSI message. The length is defined as the number of clock cycles. The number of cycles can be calculated by adding 1 to the number of the bits in an SSI message frame. Used with SSI encoders, when parameter *91.02* ABS ENC INTERF is set to *SSI*.	2/ *UINT32*
	2…127	SSI message length.	1 = 1 / -

No.	Bit/Name/Value/ Range	Description	Def/Type FbEq (16b/32b)
91.11	SSI POSITION MSB	Defines the location of the MSB (main significant bit) of the position data within an SSI message. Used with SSI encoders, when parameter *91.02* ABS ENC INTERF is set to *SSI*.	1/ *UINT32*
	1…126	Position data MSB location (bit number).	1 = 1 / -
91.12	SSI REVOL MSB	Defines the location of the MSB (main significant bit) of the revolution count within an SSI message. Used with SSI encoders, when parameter *91.02* ABS ENC INTERF is set to *SSI*.	1 / *UINT32*
	1…126	Revolution count MSB location (bit number).	1 = 1 / -
91.13	SSI DATA FORMAT	Selects the data format for an SSI encoder (when parameter *91.02* ABS ENC INTERF is set to *SSI*).	binary/ *UINT32*
	binary	Binary code.	0
	gray	Gray code.	1
91.14	SSI BAUD RATE	Selects the baud rate for an SSI encoder (when parameter *91.02* ABS ENC INTERF is set to *SSI*.	100 kbit/s / *UINT32*
	10 kbit/s	10 kbit/s.	0
	50 kbit/s	50 kbit/s.	1
	100 kbit/s	100 kbit/s.	2
	200 kbit/s	200 kbit/s.	3
	500 kbit/s	500 kbit/s.	4
	1000 kbit/s	1000 kbit/s.	5
	1500 kbit/s	1500 kbit/s.	6
	2000 kbit/s	2000 kbit/s.	7
91.15	SSI MODE	Selects the SSI encoder mode. **Note:** Parameter needs to be set only when an SSI encoder is used in the continuous mode, that is SSI encoder without incremental sin/cos signals (supported only as encoder). The SSI encoder is selected by setting parameter *91.02* ABS ENC INTERF to *SSI*.	Initial pos. / *UINT32*
	Initial pos.	Single position transfer mode (initial position)	0
	Continuous	Continuous position transfer mode.	1
	Cont.spd+pos	Continuous speed and position transfer mode.	2

No.	Bit/Name/Value/ Range	Description	Def/Type FbEq (16b/32b)
91.16	SSI TRANSMIT CYC	Selects the transmission cycle for an SSI encoder. **Note:** This parameter needs to be set only when an SSI encoder is used in the continuous mode, that is SSI encoder without incremental sin/cos signals (supported only as encoder). The SSI encoder is selected by setting parameter *91.02* ABS ENC INTERF to *SSI*.	100 us / *UINT32*
	50 us	50 µs.	0
	100 us	100 µs.	1
	200 us	200 µs.	2
	500 us	500 µs.	3
	1 ms	1 ms.	4
	2 ms	2 ms.	5
91.17	SSI ZERO PHASE	Defines the phase angle within one sine/cosine signal period that corresponds to the value of zero on the SSI serial link data. The parameter is used to adjust the synchronization of the SSI position data and the position based on sine/cosine incremental signals. Incorrect synchronization may cause an error of ±1 incremental period. **Note:** This parameter needs to be set only when an SSI encoder with sine/cosine incremental signals is used in the initial position mode.	315-45 deg /*UINT32*
	315–45 deg	315–45 degrees.	0
	45–135 deg	45–135 degrees.	1
	135–225 deg	135–225 degrees.	2
	225–315 deg	225–315 degrees.	3
91.18	ENDAT MODE	Selects the EnDat encoder mode. **Note:** This parameter needs to be set only when an EnDat encoder is used in the continuous mode, that is EnDat encoder without incremental sin/cos signals (supported only as encoder). The EnDat encoder is selected by setting parameter *91.02* ABS ENC INTERF to *EnDat*.	Initial pos. / *UINT32*
	Initial pos.	Single position transfer mode (initial position).	0
	Continuous	Continuous position data transfer mode.	1
	Cont.spd+pos	Continuous speed and position transfer mode.	2

No.	Bit/Name/Value/ Range	Description	Def/Type FbEq (16b/32b)
91.19	ENDAT MAX CALC	Selects the maximum encoder calculation time for an EnDat encoder. **Note:** This parameter needs to be set only when an EnDat encoder is used in the continuous mode, that is EnDat encoder without incremental sin/cos signals (supported only as encoder). The EnDat encoder is selected by setting parameter *91.02* ABS ENC INTERF to *EnDat*.	50 ms / *UINT32*
	10 us	10 microseconds.	0
	100 us	100 microseconds.	1
	1 ms	1 millisecond.	2
	50 ms	50 milliseconds.	3
91.20	ENDAT CLOCK FREQ	Selects the encoder clock frequency for an EnDat encoder. **Note:** This parameter needs to be set only when an EnDat encoder is used in the continuous mode, that is EnDat encoder without incremental sin/cos signals (supported only as encoder). The EnDat encoder is selected by setting parameter *91.02* ABS ENC INTERF to *EnDat*.	4 MHz / *enum*
	1 MHz	1 Mega Hertz	0
	2 MHz	2 Mega Hertz	1
	4 MHz	4 Mega Hertz	2
	8 MHz	8 Mega Hertz	3

92 RESOLVER CONF		Resolver configuration; used when parameter *90.01* ENCODER SEL is set to *FEN-21 RES*.	
92.01	RESOLV POLEPAIRS	Selects the number of pole pairs.	1 / *UINT32*
	1…32	Number of pole pairs.	1 = 1 / -
92.02	EXC SIGNAL AMPL	Defines the amplitude of the excitation signal.	4.0 Vrms / *UINT32*
	4.0…12.0 Vrms	Excitation signal amplitude.	10 = 1 Vrms / -
92.03	EXC SIGNAL FREQ	Defines the frequency of the excitation signal.	1 kHz / *UINT32*
	1…20 kHz	Excitation signal frequency.	1 = 1 kHz / -

No.	Bit/Name/Value/ Range	Description	Def/Type FbEq (16b/32b)
93 PULSE ENC CONF		TTL/HTL input and TTL output configuration.	
93.01	ENC PULSE NR	Defines the pulse number per revolution for encoder.	0 / *UINT32*
	0…65535	Pulses per revolution for encoder.	1 = 1 / -
93.02	ENC TYPE	Selects the type of encoder.	Quadrature /*enum*
	Quadrature	Quadrature encoder (two channels, channels A and B).	0
	single track	Single track encoder (one channel, channel A).	1
93.03	ENC SP CALCMODE	Selects the speed calculation mode for encoder. *When the single track mode is selected by parameter *93.02* ENC TYPE, the speed is always positive.	auto rising /*enum*
	A&B all	Channels A and B: Rising and falling edges are used for speed calculation. Channel B: Defines the direction of rotation. * **Note:** When the single track mode is selected by parameter *93.02* ENC TYPE, setting 0 acts like setting 1.	0
	A all	Channel A: Rising and falling edges are used for speed calculation. Channel B: Defines the direction of rotation. *	1
	A rising	Channel A: Rising edges are used for speed calculation. Channel B: Defines the direction of rotation. *	2
	A falling	Channel A: Falling edges are used for speed calculation. Channel B: Defines the direction of rotation. *	3
	auto rising	Used mode (1, 2 or 3) is changed automatically depending on the pulse frequency according to the following table:	4
	auto falling		5

93.03 = 4	*93.03* = 5	Pulse frequency of the channel(s)
Used mode		
0	0	< 2442 Hz
1	1	2442…4884 Hz
2	3	> 4884 Hz

No.	Bit/Name/Value/ Range	Description	Def/Type FbEq (16b/32b)
93.04	ENC POS EST ENA	Selects whether position estimation is used with encoder to increase position data resolution or not.	TRUE / *enum*
	FALSE	Measured position (Resolution: 4 x pulses per revolution for quadrature encoders, 2 x pulses per revolution for single track encoders.)	0
	TRUE	Estimated position. (Uses position extrapolation. Extrapolated at the time of data request.)	1
93.05	ENC SP EST ENA	Selects whether calculated or estimated speed is used with encoder.	FALSE / *enum*
	FALSE	Last calculated speed (calculation interval is 62.5 µs…4 ms).	0
	TRUE	Estimated speed (estimated at the time of data request) Estimation increases the speed ripple in steady state operation, but improves the dynamics.	1
93.06	ENC OSC LIM	Activates transient filter for encoder. Changes of direction of rotation are ignored above the selected pulse frequency.	4880Hz / *enum*
	4880Hz	Change in rotation of direction allowed below 4880 Hz.	0
	2440Hz	Change in rotation of direction allowed below 2440 Hz.	1
	1220Hz	Change in rotation of direction allowed below 1220 Hz.	2
	Disabled	Change in rotation of direction allowed at any pulse frequency.	3
93.07	EMUL PULSE NR	Defines the number of TTL pulses per revolution used in encoder emulation. Encoder emulation is enabled by parameter *90.02* EMUL MODE SEL.	0 / *UINT32*
	0…65535	TTL pulses used in encoder emulation.	1 = 1 / -
93.08	EMUL POS REF	Selects the source for the position value used in encoder emulation when parameter *90.02* EMUL MODE SEL is set to *FEN-01 SWref*, *FEN-11 SWref*, *FEN-21 SWref* or *FEN-31 SWref*. See parameter group *90 ENC MODULE SEL*. The source can be any actual or reference position value (except *01.09* ENCODER POS).	P.POS ACT / *Val pointer*
		Value pointer (See *Terms and abbreviations* on page *183*.)	

No.	Bit/Name/Value/ Range	Description	Def/Type FbEq (16b/32b)
93.09	EMUL POS OFFSET	Defines the zero point for emulated position in relation of the zero point of the input position (within one revolution). The input position is selected by parameter *90.02* EMUL MODE SEL. For example, if the offset is 0, an emulated zero pulse is generated each time the input position moves across 0. With an offset of 0.5, an emulated zero pulse is generated each time the input position (within one revolution) moves across 0.5.	0.00000 rev / *Real*
	0.00000 …0.99998 rev	Emulated zero pulse position offset.	- / 100000 = 1 rev

97 USER MOTOR PAR		User adjustment of motor model values estimated during ID run. The values can be entered in either “per unit” or SI.	
97.01	USE GIVEN PARAMS	Activates the motor model parameters *97.02*…*97.14* and the rotor angle offset parameter *97.17*. **Notes:** • The parameter value is automatically set to zero when ID run is selected by parameter *99.10* IDRUN MODE. The values of parameters *97.02*…*97.14* are updated according to the motor characteristics identified during the ID run. • This parameter cannot be changed while the drive is running.	NoUserPars / *enum*
	NoUserPars	Parameters *97.02*…*97.14* inactive.	0
	UserMotPars	The values of parameters *97.02*…*97.14* are used in the motor model.	1
	UserPosOffs	The value of parameter *97.17* is used as the rotor angle offset. Parameters *97.02*…*97.14* are inactive.	2
	AllUserPars	The values of parameters *97.02*…*97.14* are used in the motor model, and the value of parameter *97.17* is used as the rotor angle offset.	3
97.02	RS USER	Defines the stator resistance R_S of the motor model.	0.00000 p.u. / *Real24*
	0.00000… 0.50000 p.u	Stator resistance.	- / 100000 = 1 p.u
97.03	RR USER	Defines the rotor resistance R_R of the motor model. **Note:** This parameter is valid only for asynchronous motors.	0.00000 p.u. / *Real24*
	0.00000… 0.50000 p.u	Rotor resistance.	- / 100000 = 1 p.u

No.	Bit/Name/Value/ Range	Description	Def/Type FbEq (16b/32b)
97.04	LM USER	Defines the main inductance L_M of the motor model. **Note:** This parameter is valid only for asynchronous motors.	0.00000 p.u. / *Real24*
	0.00000… 10.00000 p.u	Main inductance.	- / 100000 = 1 p.u
97.05	SIGMAL USER	Defines the leakage inductance σL_S. **Note:** This parameter is valid only for asynchronous motors.	0.00000 p.u. / *Real24*
	0.00000… 1.00000 p.u	Leakage inductance.	- / 100000 = 1 p.u
97.06	LD USER	Defines the direct axis (synchronous) inductance. **Note:** This parameter is valid only for permanent magnet motors.	0.00000 p.u. / *Real24*
	0.00000…10.000 00 p.u	Direct axis (synchronous) inductance.	- / 100000 = 1 p.u
97.07	LQ USER	Defines the quadrature axis (synchronous) inductance. **Note:** This parameter is valid only for permanent magnet motors.	0.00000 p.u. / *Real24*
	0.00000…10.000 00 p.u	Quadrature axis (synchronous) inductance.	- / 100000 = 1 p.u
97.08	PM FLUX USER	Defines the permanent magnet flux. **Note:** This parameter is valid only for permanent magnet motors.	0.00000 p.u. / *Real24*
	0.00000…2.0000 0 p.u	Permanent magnet flux.	- / 100000 = 1 p.u
97.09	RS USER SI	Defines the stator resistance R_S of the motor model.	0.00000 Ohm / *Real24*
	0.00000… 100.00000 Ohm	Stator resistance.	- / 100000 = 1 Ohm
97.10	RR USER SI	Defines the rotor resistance R_R of the motor model. **Note:** This parameter is valid only for asynchronous motors.	0.00000 Ohm / *Real24*
	0.00000… 100.00000 Ohm	Rotor resistance.	- / 100000 = 1 Ohm
97.11	LM USER SI	Defines the main inductance L_M of the motor model. **Note:** This parameter is valid only for asynchronous motors.	0.00 mH / *Real24*
	0.00 … 100000.00 mH	Main inductance.	- / 100 = 1 mH

No.	Bit/Name/Value/ Range	Description	Def/Type FbEq (16b/32b)
97.12	SIGL USER SI	Defines the leakage inductance σL_S. **Note:** This parameter is valid only for asynchronous motors.	0.00 mH / *Real24*
	0.00… 100000.00 mH	Leakage inductance.	- / 100 = 1 mH
97.13	LD USER SI	Defines the direct axis (synchronous) inductance. **Note:** This parameter is valid only for permanent magnet motors.	0.00 mH / *Real24*
	0.00… 100000.00 mH	Direct axis (synchronous) inductance.	- / 100 = 1 mH
97.14	LQ USER SI	Defines the quadrature axis (synchronous) inductance. **Note:** This parameter is valid only for permanent magnet motors.	0.00 mH / *Real24*
	0.00 …100000.00 mH	Quadrature axis (synchronous) inductance.	- / 100 = 1 mH
97.15	NOMINAL TORQUE	Nominal torque in N•m which corresponds to 100%. **Note:** This parameter is copied from parameter *99.12* MOT NOM TORQUE, if given. Otherwise the value is calculated.	0.000 N•m / *INT32*
	0.000… 2147483.647 N•m	Nominal torque.	- / 1000 = 1 N•m
97.16	POLEPAIRS	Calculated number of motor pole pairs. **Note:** This parameter cannot be set by the user.	0 / *UINT32*
	0…1000	Calculated number of motor pole pairs.	1 = 1 / -
97.17	POS OFFSET USER	Defines an angle offset between the zero position of the synchronous motor and the zero position of the position sensor. **Notes:** • The value is in electrical degrees. The electrical angle equals the mechanical angle multiplied by the number of motor pole pairs. • This parameter is valid only for permanent magnet motors.	0 deg / *Real*
	0…360 deg	Angle offset.	- / 1 = 1 deg

No.	Bit/Name/Value/ Range	Description	Def/Type FbEq (16b/32b)
99 START-UP DATA		Start-up settings such as language, motor data and motor control mode.	
99.01	LANGUAGE	Selects the language. **Note:** Not all languages listed below are necessarily supported.	ENGLISH / *enum*
	ENGLISH	English	0809 hex
	DEUTSCH	German	0407 hex
	ITALIANO	Italian	0410 hex
	ESPAÑOL	Spanish	040A hex
	RUSSKI	Russian	041D hex
	TÜRKÇE	Turkish	041F hex
99.02	MOTOR TYPE	Selects the motor type. **Note:** This parameter cannot be changed while the drive is running.	AM / *enum*
	AM	Asynchronous motor. Three-phase AC voltage supplied induction motor with a squirrel cage rotor.	0
	PMSM	Permanent magnet motor. Three-phase AC voltage supplied synchronous motor with a permanent magnet rotor and sinusoidal BackEMF voltage.	1
99.03	MOT NOM CURRENT	Defines the nominal motor current. Must be equal to the value on the motor rating plate. If several motors are connected to the inverter, enter the total current of the motors. **Note:** • Correct motor run requires that the magnetising current of the motor does not exceed 90 percent of the nominal current of the inverter. • This parameter cannot be changed while the drive is running.	- / *Real*
	-	Nominal motor current. **Note:** The allowed range is 1/6…2 × I_{2N} of drive.	- / 10 = 1 A

No.	Bit/Name/Value/ Range	Description	Def/Type FbEq (16b/32b)
99.04	MOT NOM VOLTAGE	Defines the nominal motor voltage. Nominal voltage is a fundamental phase to phase rms voltage, which is supplied to the motor at the nominal operating point. This parameter value must be equal to the value on the asynchronous motor name plate. **Note:** • Make sure the motor is connected correctly (star or delta) in accordance with the rating plate. • With permanent magnet motors, the nominal voltage is the BackEMF voltage (at motor nominal speed). If the voltage is given as voltage per rpm, eg, 60 V per 1000 rpm, the voltage for 3000 rpm nominal speed is 3 × 60 V = 180 V. Note that the nominal voltage is not equal to the equivalent DC motor voltage (E.D.C.M.) value given by some motor manufactures. The nominal voltage can be calculated by dividing the E.D.C.M. voltage by 1.7 (= square root of 3). • The stress on the motor insulations is always dependent on the drive supply voltage. This also applies to the case where the motor voltage rating is lower than the rating of the drive and the supply of the drive. • This parameter cannot be changed while the drive is running.	- / *Real*
	80.0…960.0 V	Nominal motor voltage. **Note:** The allowed range is 1/6…2 × U_N of drive.	- / 10 = 1 V
99.05	MOT NOM FREQ	Defines the nominal motor frequency. **Note:** This parameter cannot be changed while the drive is running.	- / *Real*
	5.0…500.0 Hz	Nominal motor frequency.	- / 10 = 1 Hz
99.06	MOT NOM SPEED	Defines the nominal motor speed. Must be equal to the value on the motor rating plate. When the parameter value is changed, check the speed limits in parameter group *20 LIMITS*. **Note:** This parameter cannot be changed while the drive is running.	- / *Real*
	0…30000 rpm	Nominal motor speed.	- / 1 = 1 rpm

No.	Bit/Name/Value/ Range	Description	Def/Type FbEq (16b/32b)
99.07	MOT NOM POWER	Defines the nominal motor power. Must be equal to the value on the motor rating plate. If several motors are connected to the inverter, enter the total power of the motors. Set also parameter *99.08* MOT NOM COSFII. **Note:** This parameter cannot be changed while the drive is running.	- / *Real*
	0.00… 10000.00 kW	Nominal motor power.	- / 100 = 1 kW
99.08	MOT NOM COSFII	Defines the cosphi (not applicable to permanent magnet motors) for a more accurate motor model. Not obligatory; if set, should be equal to the value on the motor rating plate. **Note:** This parameter cannot be changed while the drive is running.	0.00 / *Real24*
	0.00…1.00	Cosphi (0 = parameter disabled).	- / 100 = 1
99.09	MOT NOM TORQUE	Defines the nominal motor shaft torque for a more accurate motor model. Not obligatory. **Note:** This parameter cannot be changed while the drive is running.	0.000 N•m / *INT32*
	0.000… 2147483.647 N•m	Nominal motor shaft torque.	- / 1000 = 1 N•m

No.	Bit/Name/Value/ Range	Description	Def/Type FbEq (16b/32b)
99.10	IDRUN MODE	Selects the type of the motor identification performed at the next start of the drive in the DTC mode. During the identification, the drive identifies the characteristics of the motor for optimum motor control. After the ID run, the drive is stopped. **Note:** • This parameter cannot be changed while the drive is running. • Once the ID run is activated, you can cancel it only by stopping the drive. • If the ID run has already been performed once, the parameter is automatically set to *No.* • If ID run is not yet performed, the parameter is automatically set to *IDstandstill*. In this case, ID run must be performed. • ID run can only be performed in local control (that is when the drive is controlled through PC tool or control panel). • ID run must be performed every time any of the motor parameters (*99.02*, *99.03*…*99.12*) are changed. The parameter is automatically set to *IDstandstill* after the motor parameters are set. • The motor must be de-coupled from the elevator system during rotating ID run as well as if rotating autophasing is required (that is the motor shaft must NOT be locked and the load torque must be < 10% during the ID run). • The drive does not control the mechanical brake of the motor open during the ID run. Make sure by some other means that the brake opens if the rotating ID run or rotating autophasing is required. • Make sure that possible safe torque off and emergency stop circuits are closed during the ID run.	No / *enum*
	No	No motor ID run is requested.	0
	IDstandstill	Standstill ID run. The motor is injected with DC current. With asynchronous motor, the motor shaft is not rotating (with a permanent magnet motor the shaft can rotate < 0.5 revolution). **Note:** Select this mode only if the rotating ID run is not possible (the motor cannot be de-coupled from the elevator system).	1
	ID adv st	Advanced standstill ID run.	2

No.	Bit/Name/Value/ Range	Description	Def/Type FbEq (16b/32b)
	IDrotating	Rotating ID run. The motor must be de-coupled from the lift system.	3
	Autophs turn	Turning autophasing, that determines the start angle of the motor. Note that other motor model values are not updated. See also, section *Autophasing modes* on page *168*. **Note**: • Autophasing can only be selected after the ID run is performed once. Autophasing is used when an absolute encoder, a resolver or an encoder with commutation signals is added/changed to a permanent magnet motor. • The motor must be de-coupled from the lift system.	4
	Autophs st1	Standstill autophasing mode 1.	5
	Autophs st2	Standstill autophasing mode 2.	6
	Autophs rope	Turning autophasing with ropes on. This method can be used if the lift cabin is allowed to move few tens of centimeters up.	7
	Cur meas cal	Current offset and gain measurement calibration. The calibration will be performed at the next start.	8
99.11	PHASE INVERSION	Defines the motor rotation direction. The direction change can function without exchanging the positions of two motor cable phase conductors at the drive output terminals or at the motor connection box.	No /
	No	No motor phase inversion.	0
	Yes	Motor phases inverted, that is motor rotation direction is changed.	1
99.12	POS OFFSET SRC	Select the source for the angle offset between the zero position of the synchronous motor and the zero position of the position sensor.	Drive mem / *enum*
	Drive mem	Drive uses the angle offset stored in drive memory unit.	0
	Encoder mem	Drive uses the angle offset stored in encoder memory. **Note**: This selection is supported with FEN-11 (EnDat and Hiperface).	1

No.	Bit/Name/Value/ Range	Description	Def/Type FbEq (16b/32b)
	Set zero pos	Sets the zero position of angle offset to the encoder memory. Parameter *90.06* ENC PAR REFRESH must be selected to activate the writing procedure to the encoder. **Note**: This selection is supported with FEN-11 (EnDat and Hiperface).	2
99.13	SLIP GAIN	Defines the slip gain which is used to improve the estimated motor slip. 100% means full slip gain; 0% means no slip gain. The default value is 100%. Other values can be used if a static speed error is detected despite of the full slip gain. Example (with nominal load and nominal slip of 40 rpm): A 1000 rpm constant speed reference is given to the drive. Despite of the full slip gain (= 100%), a manual tachometer measurement from the motor axis gives a speed value of 998 rpm. The static speed error is 1000 rpm - 998 rpm = 2 rpm. Error can be compensated by increasing slip gain. At 105% gain value, no static speed error exists (2 rpm / 40 rpm = 5%).	100% / *Real*
	0…200%	Slip gain.	-
99.14	CTRL UNIT SUPPLY	Defines the manner in which the drive control unit is powered.	False / *Bit pointer*
	False	Drive control unit is powered by internal 24 V.	
	True	Drive control unit is powered by external supply.	
99.15	FAN CTRL MODE	Selects the control mode for the drive cooling fan.	Normal / *enum*
	Normal	The drive cooling fan runs during drive modulation.	0
	Advanced	The drive cooling fan is temperature controlled.	1
99.16	PHASE LOSS TEST	Selects the motor phase loss test procedure at the drive start.	Enable / *enum*
	Disable	Motor phase loss test disabled.	0
	Enable	Motor phase loss test enabled.	1

12

Fault tracing

Contents of this chapter

The chapter lists the alarm and fault messages including possible causes and corrective actions.

Safety

See *Safety instructions* on page *13*.

Alarm and fault indications

An alarm or a fault message indicates abnormal drive status. Most alarm and fault causes can be identified and corrected using this information. If not, an ABB representative should be contacted.

The alarm/fault code is displayed on the 7-segment display of the drive. The following table describes the indications given by the 7-segment display.

Display	Meaning
“E-” followed by error code	System error. See the appropriate drive *Hardware manual*.
“A-” followed by error code	Alarm. See section *Alarm messages generated by the drive* on page *290*.
“F-” followed by error code	Fault. See section *Fault messages generated by the drive* on page *299*.

How to reset

The drive can be reset either by pressing the RESET key on the control panel or PC tool, or by switching the supply voltage off for a while. When the fault is removed, the motor can be restarted.

Faults can also be reset from an external source selected with parameter 46.80 FAULT RESET. In addition, the drive features an automatic fault reset function. For more information, see section Drive faults on page *133*.

Fault history

When a fault is detected, it is stored in the fault logger with a time stamp. The fault history stores information on the 16 latest faults of the drive. Three of the latest faults are stored at the beginning of a power switch off.

Parameters *08.01* ACTIVE FAULT and *08.02* LAST FAULT store the fault codes of the most recent faults.

Alarms can be monitored via alarm words *08.11* ALARM WORD 1 … *08.14* ALARM WORD 4. Alarm information is lost at power switch off or fault reset.

Alarm messages generated by the drive

Code	Alarm	Cause	What to do
2000	BRAKE START TORQUE Programmable fault: *35.08* BRAKE FAULT FUNC	Mechanical brake alarm. The alarm is activated if the required motor starting torque, 35.07 BRAKE OPEN TORQ, is not achieved.	Check the brake open torque setting, parameter 35.07. Check drive torque and current limits. See parameter group *20 LIMITS* on page *233*.
2001	BRAKE NOT CLOSED MON1 Programmable fault: *35.08* BRAKE FAULT FUNC	Mechanical brake control alarm. The alarm is activated, eg, if brake monitoring is not as expected during brake closing.	Check mechanical brake connection. Check mechanical brake settings, parameters *35.01*…*35.08*. To determine whether the problem is with the monitoring signal or brake: Check if the brake is closed or open.
2002	BRAKE NOT OPEN MON1 Programmable fault: *35.08* BRAKE FAULT FUNC	Mechanical brake control alarm. The alarm is activated, eg, if brake monitoring is not as expected during brake opening.	Check mechanical brake connection. Check mechanical brake settings, parameters *35.01*…*35.08*. To determine whether the problem is with the monitoring signal or brake: Check if the brake is closed or open.

Code	Alarm	Cause	What to do
2003	SAFE TORQUE OFF Programmable fault: *46.05* STO DIAGNOSTIC	Safe torque off function is active, that is, safety circuit signal(s) connected to connector X6 is lost while the drive is stopped and parameter *46.05* STO DIAGNOSTIC is set to *Alarm*.	Check safety circuit connections. For more information, see the appropriate drive *Hardware manual*.
2004	STO MODE CHANGE	Error in changing Safe torque off supervision, ie, parameter *46.05* STO DIAGNOSTIC setting could not be changed to value *Alarm*.	Contact your local ABB representative.
2005	MOTOR TEMPERATURE Programmable fault: *46.07* MOT TEMP PROT	Measured motor temperature has exceeded the alarm limit defined with parameter *46.09* MOT TEMP ALM LIM.	Check that the actual number of sensors corresponds to the value set with parameter *46.08* MOT TEMP SOURCE. Check motor ratings and load. Let the motor cool down. Ensure proper motor cooling: Check the cooling fan, clean cooling surfaces, etc. Check the value of the alarm limit.
2006	EMERGENCY OFF	Drive has received an emergency OFF2 command.	To restart the drive, activate the Run enable signal (source selected by parameter *10.80* LIFT RUN ENABLE) and start the drive.
2007	RUN ENABLE	No Run enable signal is received.	Check the setting of parameter *10.80* LIFT RUN ENABLE. Switch the signal (eg, digital input) on or check the wiring of the selected source.
2008	ID-RUN	Motor identification run is on.	This alarm belongs to the normal start-up procedure. Wait until the drive indicates that motor identification is completed.
		Motor identification is required.	This alarm belongs to the normal start-up procedure. Select how motor identification should be performed, parameter *99.10* IDRUN MODE. Start identification routines by pressing the Start key.

Code	Alarm	Cause	What to do
2009	EMERGENCY STOP	Drive has received an emergency stop command (OFF1/OFF3).	Check that it is safe to continue operation. Return the emergency stop push button to the normal position. Restart the drive.
2011	BR OVERHEAT	Brake resistor temperature has exceeded the alarm limit defined with parameter *48.06* BR TEMP ALARMLIM.	Stop the drive. Let the resistor cool down. Check resistor overload protection function settings, parameters *48.01*…*48.04*. Check the alarm limit setting, parameter *48.06*. Check that the braking cycle meets the allowed limits.
2012	BC OVERHEAT	Brake chopper IGBT temperature has exceeded the internal alarm limit.	Let the chopper cool down. Check for excessive ambient temperature. Check for cooling fan failure. Check for obstructions in the air flow. Check the dimensioning and cooling of the cabinet. Check resistor overload protection function settings, parameters *48.01*…*48.04*. Check that the braking cycle meets allowed limits. Check that the drive supply AC voltage is not excessive.
2013	DEVICE OVERTEMP	Measured drive temperature has exceeded the internal alarm limit.	Check ambient conditions. Check air flow and fan operation. Check heatsink fins for dust pick-up. Check motor power against unit power.
2014	INTBOARD OVERTEMP	Interface board (between power unit and control unit) temperature has exceeded the internal alarm limit.	Let the drive cool down. Check for excessive ambient temperature. Check for cooling fan failure. Check for obstructions in the air flow. Check the dimensioning and cooling of the cabinet.

Code	Alarm	Cause	What to do
2015	BC MOD OVERTEMP	Input bridge or brake chopper temperature has exceeded the internal alarm limit.	Let the drive cool down. Check for excessive ambient temperature. Check for cooling fan failure. Check for obstructions in the air flow. Check the dimensioning and cooling of the cabinet.
2016	IGBT OVERTEMP	Drive temperature based on the thermal model has exceeded the internal alarm limit.	Check ambient conditions. Check air flow and fan operation. Check heatsink fins for dust pick-up. Check motor power against unit power.
2017	FIELDBUS COMM Programmable fault: *50.02* COMM LOSS FUNC	Cyclical communication between the drive and fieldbus adapter module or between PLC and fieldbus adapter module is lost.	Check the status of fieldbus communication. See the appropriate fieldbus adapter module *User's manual*. Check fieldbus parameter settings. See parameter group 50 FIELDBUS on page *251*. Check cable connections. Check if the communication master can communicate.
2020	FB PAR CONF	The drive does not have a functionality requested by PLC, or the requested functionality has not been activated.	Check PLC programming. Check fieldbus parameter settings. See parameter group 50 FIELDBUS on page *251*.
2021	NO MOTOR DATA	Parameters in group *99 START-UP DATA* have not been set.	Check that all the required parameters in group *99 START-UP DATA* are set. **Note:** It is normal for this alarm to appear during the start-up until the motor data is entered.

Code	Alarm	Cause	What to do
2022	ENCODER 1 FAILURE	Encoder is activated by a parameter but the encoder interface (FEN-xx) cannot be found.	Check that parameter *90.01* ENCODER SEL setting corresponds to encoder interface (FEN-xx) installed in drive Slot 1/2 (signal *09.20* OPTION SLOT 1 / *09.21* OPTION SLOT 2). **Note:** The new setting will only take effect after parameter *90.06* ENC PAR REFRESH is used or after the JCU Control Unit is powered up the next time.
2026	ENC EMULATION FAILURE	Encoder emulation error	If the position value used in emulation is measured by the encoder: • Check that the FEN-xx encoder used in emulation (*90.02* EMUL MODE SEL) corresponds to FEN-xx encoder interface 1 or (and) 2 activated with parameter *90.01* ENCODER SEL (Parameter *90.01* activates the position calculation of the used FEN-xx input). If the position value used in emulation is determined by drive software: • Check that the FEN-xx encoder used in emulation (*90.02* EMUL MODE SEL) corresponds to FEN-xx encoder interface 1 or (and) 2 activated with parameter *90.01* ENCODER SEL (because position data used in emulation is written to FEN-xx during encoder data request). **Note:** The new setting will only take effect after parameter *90.06* ENC PAR REFRESH is used or after the JCU Control Unit is powered up the next time.

Code	Alarm	Cause	What to do
2027	FEN TEMP MEAS FAILURE	Error in temperature measurement when a temperature sensor (KTY or PTC) connected to encoder interface FEN-xx is used.	Check that parameter *46.08* MOT TEMP SOURCE setting corresponds to encoder interface installation (*09.20* OPTION SLOT 1 / *09.21* OPTION SLOT 2): If one FEN-xx module is used: • Parameter *46.08* MOT TEMP SOURCE setting must be either *KTY 1st FEN* or *PTC 1st FEN*. FEN-xx module can be in either Slot 1 or Slot 2. If two FEN-xx modules are used: • When parameter *46.08* MOT TEMP SOURCE setting is *KTY 1st FEN* or *PTC 1st FEN*, the encoder installed in drive Slot 1 is used. • When parameter *46.08* MOT TEMP SOURCE setting is *KTY 2nd FEN* or *PTC 2nd FEN*, the encoder installed in drive Slot 2 is used.
		Error in temperature measurement when a KTY sensor connected to encoder interface FEN-01 is used.	FEN-01 does not support temperature measurement with a KTY sensor. Use a PTC sensor or another encoder interface module.
2028	ENC EMUL MAX FREQ	TTL pulse frequency used in encoder emulation exceeds the maximum allowed limit (500 kHz).	Decrease parameter *93.07* EMUL PULSE NR value. **Note:** The new setting will only take effect after parameter *90.06* ENC PAR REFRESH is used or after the JCU Control Unit is powered up the next time.
2029	ENC EMUL REF ERROR	Encoder emulation has failed due to a failure in writing a new (position) reference for emulation.	Contact your local ABB representative.

Code	Alarm	Cause	What to do
2030	RESOLVER AUTOTUNE ERR	Resolver autotuning routines, which are automatically started when resolver input is activated for the first time, have failed.	Check the cable between resolver and resolver interface module (FEN-21) and the order of connector signal wires at both ends of the cable. Check resolver parameter settings. For resolver parameters and information, see parameter group *92 RESOLVER CONF* on page *277*. **Note:** Resolver autotuning routines should always be performed after resolver cable connection is modified. Autotuning routines can be activated by setting parameter *92.02* EXC SIGNAL AMPL or *92.03* EXC SIGNAL FREQ, and then setting parameter *90.06* ENC PAR REFRESH to *Configure*.
2031	ENCODER 1 CABLE	Encoder cable fault detected.	Check the cable between FEN-xx interface and encoder. After any modifications in cabling, re-configure the interface by switching the drive power off and on, or by activating parameter *90.06* ENC PAR REFRESH.
2035	PS COMM	Communication errors detected between the JCU Control Unit and the power unit of the drive.	Check the connections between the JCU Control Unit and the power unit.
2036	RESTORE	Restoration of backed-up parameters failed.	Contact your local ABB representative.
2037	CUR MEAS CALIBRATION	Current measurement calibration will occur at the next start.	Informative alarm.
2038	AUTOPHASING	Autophasing will occur at the next start.	Informative alarm.

Code	Alarm	Cause	What to do
2039	EARTH FAULT Programmable fault: 46.03 EARTH FAULT	Drive has detected load unbalance typically due to an earth fault in the motor or motor cable.	Check that there are no power factor correction capacitors or surge absorbers in the motor cable. Check that there is no earth fault in the motor or motor cables: measure insulation resistances of the motor and motor cable. If no earth fault can be detected, contact your local ABB representative.
2041	MOTOR NOM VALUE	The motor configuration parameters are set incorrectly.	Check the settings of the motor configuration parameters in group *99 START-UP DATA*.
		The drive is not dimensioned correctly.	Check that the drive is sized correctly for the motor.
2047	SPEED FEEDBACK	No speed feedback is received.	Check the settings of the parameters in group *22 SPEED FEEDBACK*. Check encoder installation. See the description of fault *0039* (ENCODER) for more information.
2048	OPTION COMM LOSS	Communication between the drive and option module (FEN-xx and/or FIO-xx) is lost.	Check that option modules are properly connected to Slot 1 and (or) Slot 2. Check that option modules or Slot 1/2 connectors are not damaged. To determine whether a module or connector is damaged: Test each module individually in Slot 1 and Slot 2.
2072	DC NOT CHARGED	The voltage of the intermediate DC circuit has not yet risen to operating level.	Wait for the DC voltage to rise.
2075	LOW VOLT MOD CON	Low voltage mode is activated but the parameter settings are outside allowable limits.	Check the Low voltage mode parameters in group *47 VOLTAGE CTRL*. See also section *Low voltage mode* on page *175*.

Code	Alarm	Cause	What to do
2085	PU LOST	Connection between the JCU Control Unit and the power unit of the drive is lost. Start command is active when drive is in low voltage mode, and the connection to the power unit is lost.	Check the connections between the JCU Control Unit and the power unit.
2087	BRAKE NOT CLOSED MON2 Programmable fault: *35.08* BRAKE FAULT FUNC	Mechanical brake control alarm. The alarm is activated, e.g, if brake monitoring is not as expected during brake closing.	Check mechanical brake connection. Check mechanical brake settings, parameters *35.01*…*35.08*. To determine whether the problem is with the monitoring signal or brake: Check if the brake is closed or open.
2088	BRAKE NOT OPEN MON2 Programmable fault: *35.08* BRAKE FAULT FUNC	Mechanical brake control alarm. The alarm is activated, e.g, if brake monitoring is not as expected during brake opening.	Check mechanical brake connection. Check mechanical brake settings, parameters *35.01*…*35.08*. To determine whether the problem is with the monitoring signal or brake: Check if the brake is closed or open.
2089	INERTIA AUTOTUNE	Inertia autotune function is activated.	Informative alarm.
2090	PASSCODE NO CONFIRM	New user passcode confirmation is not entered.	Enter the new passcode into parameter *16.13* CONFIRM PASSCODE, to confirm the new passcode.
2405	BRAKE SLIP *05.01* LIFT SW bit 11	Brake is slipping while the motor is not running.	Check the mechanical brake physically for a rope slip. Check the Speed match function parameter settings in group *81 SUPERVISION*.
2406	LVL TIME OVER	Leveling overtime stop function is activated during the last run.	Check the stop switch and wiring on the problematic floor.
2407	SMART SLOWDOWN CONFIG	Smart slowdown function is enabled with an encoder, but encoder/resolver feedback is not configured.	Check the encoder/resolver connection. Check the encoder/resolver selection in group 90 ENC MODULE SEL and the related parameter settings in groups 91, 92 or 93.

Fault messages generated by the drive

Code	Fault	Cause	What to do
0001	OVERCURRENT	Output current has exceeded the internal fault limit.	Check motor load. Check acceleration time. See parameter group *25 ACC/DEC RAMP* on page *236*. Check the motor and motor cable (including phasing and delta/star connection). Check that the start-up data in parameter group *99 START-UP DATA* corresponds to the motor rating plate. Check that there are no power factor correction capacitors or surge absorbers in the motor cable. Check the encoder cable (including phasing).
0002	DC OVERVOLTAGE	Excessive intermediate circuit DC voltage.	Check the mains for static or transient overvoltage. Check the brake chopper and resistor (if used). Check the deceleration time. Use the coast-to-stop function (if applicable). Retrofit the frequency converter with the brake chopper and brake resistor.
0003	DEVICE OVERTEMP	Measured drive temperature has exceeded the internal fault limit.	Check ambient conditions. Check air flow and fan operation. Check heatsink fins for dust pick-up. Check motor power against unit power.
0004	SHORT CIRCUIT	Short-circuit in the motor cable(s) or motor.	Check the motor and motor cable. Check that there are no power factor correction capacitors or surge absorbers in the motor cable.
0005	DC UNDERVOLTAGE	Intermediate circuit DC voltage is not sufficient due to missing mains phase, blown fuse or rectifier bridge internal fault.	Check mains supply and fuses.

Code	Fault	Cause	What to do
0006	EARTH FAULT Programmable fault: *46.03* EARTH FAULT	Drive has detected load unbalance typically due to an earth fault in the motor or motor cable.	Check that there are no power factor correction capacitors or surge absorbers in the motor cable. Check that there is no earth fault in the motor or motor cables: measure insulation resistances of motor and motor cable. If no earth fault can be detected, contact your local ABB representative.
0007	FAN FAULT	Fan is not able to rotate freely or the fan is disconnected. Fan operation is monitored by measuring the fan current.	Check the fan operation and connection.
0008	IGBT OVERTEMP	Drive temperature based on the thermal model has exceeded the internal fault limit.	Check ambient conditions. Check air flow and fan operation. Check heatsink fins for dust pick-up. Check motor power against unit power.
0009	BC WIRING	Brake resistor short circuit or brake chopper control fault.	Check brake chopper and brake resistor connection. Ensure that the brake resistor is not damaged.
0010	BC SHORT CIRCUIT	Short circuit in brake chopper IGBT.	Ensure that the brake resistor is connected and not damaged.
0011	BC OVERHEAT	Brake chopper IGBT temperature has exceeded the internal fault limit.	Let the chopper cool down. Check for excessive ambient temperature. Check for cooling fan failure. Check for obstructions in the air flow. Check the dimensioning and cooling of the cabinet. Check resistor overload protection function settings, parameters *48.02*…*48.04*. Check that the braking cycle meets allowed limits. Check that the drive supply AC voltage is not excessive.

Code	Fault	Cause	What to do
0012	BR OVERHEAT	Brake resistor temperature has exceeded the fault limit defined with parameter *48.05* BR TEMP FAULTLIM.	Stop the drive. Let the resistor cool down. Check resistor overload protection function settings, parameters *48.01*…*48.04*. Check the fault limit setting, parameter *48.05*. Check that the braking cycle meets allowed limits.
0013	CURR MEAS GAIN	Difference between output phase U2 and W2 current measurement gain is too great.	Contact your local ABB representative.
0014	CABLE CROSS CON Programmable fault: *48.05* CROSS CONNECTION	Incorrect input power and motor cable connection (ie, the input power cable is connected to the drive motor connection).	Check input power connections.
0015	SUPPLY PHASE Programmable fault: *46.04* SUPPL PHS LOSS	Intermediate circuit DC voltage is oscillating due to missing input power line phase or blown fuse.	Check input power line fuses. Check for input power supply imbalance.
0016	MOTOR PHASE Programmable fault: *46.02* MOT PHASE LOSS	Motor circuit fault due to missing motor connection (all three phases are not connected).	Connect the motor cable.
0017	ID-RUN FAULT	Motor ID Run is not completed successfully.	Check the fault logger for a fault code extension. See the appropriate actions for each extension below.
	Fault code extension: 1	The ID run cannot be completed because the maximum current setting and/or the internal current limit of the drive is too low.	Check the settings of parameters *99.03* MOT NOM CURRENT and *20.02* MAXIMUM CURRENT. Make sure that *20.02* MAXIMUM CURRENT > *99.03* MOT NOM CURRENT. Check that the drive is dimensioned correctly according to the motor.

Code	Fault	Cause	What to do
	Fault code extension: 2	The ID run cannot be completed because the maximum speed setting and/or calculated field weakening point is too low.	Check the settings of parameters *99.04* MOT NOM VOLTAGE, *99.05* MOT NOM FREQ, *99.06* MOT NOM SPEED, *20.01* ABS MAX SPEED. Make sure that • *20.01* ABS MAX SPEED > (0.55 × *99.06* MOT NOM SPEED) • supply voltage ≥ (0.66 × *99.04* MOT NOM VOLTAGE).
	Fault code extension: 3	The ID run cannot be completed because the maximum torque setting is too low.	Check the settings of parameters *99.09* MOT NOM TORQUE.
	Fault code extension: 4…16	Internal error.	Contact your local ABB representative.
0018	CURR U2 MEAS	Measured offset error of U2 output phase current measurement is too great. (Offset value is updated during current calibration.)	Contact your local ABB representative.
0019	CURR V2 MEAS	Measured offset error of V2 output phase current measurement is too great. (Offset value is updated during current calibration.)	Contact your local ABB representative.
0020	CURR W2 MEAS	Measured offset error of W2 output phase current measurement is too great. (Offset value is updated during current calibration.)	Contact your local ABB representative.
0021	STO1 LOST	Safe torque off function is active, ie, safety circuit signal 1 connected between X6:1 and X6:3 is lost while the drive is at stopped state and parameter *46.05* STO DIAGNOSTIC setting is *Alarm* or *No*.	Check safety circuit connections. For more information, see the appropriate drive *Hardware manual*.

Code	Fault	Cause	What to do
0022	STO2 LOST	Safe torque off function is active, ie, safety circuit signal 2 connected between X6:2 and X6:4 is lost while the drive is at stopped state and parameter *46.05* STO DIAGNOSTIC setting is *Alarm* or *No*.	Check safety circuit connections. For more information, see the appropriate drive *Hardware manual*.
0023	STO MODE CHANGE	Error in changing the Safe torque off supervision, ie, parameter *46.05* STO DIAGNOSTIC setting could not be changed to value *Fault*.	Contact your local ABB representative.
0024	INTBOARD OVERTEMP	Interface board (between power unit and control unit) temperature has exceeded the internal fault limit.	Let the drive cool down. Check for excessive ambient temperature. Check for cooling fan failure. Check for obstructions in the air flow. Check the dimensioning and cooling of the cabinet.
0025	BC MOD OVERTEMP	Input bridge or brake chopper temperature has exceeded the internal fault limit.	Let the drive cool down. Check for excessive ambient temperature. Check for cooling fan failure. Check for obstructions in the air flow. Check the dimensioning and cooling of the cabinet.
0026	AUTOPHASING	Autophasing routine (see section *Autophasing for permanent magnet synchronous motors* on page *167*) failed.	Try other autophasing modes (see parameter *99.10* IDRUN MODE), if possible.
0028	PS COMM	Communication errors detected between the JCU Control Unit and the power unit of the drive.	Check the connections between the JCU Control Unit and the power unit.
0029	IN CHOKE TEMP	Temperature of internal AC choke excessive.	Check the cooling fan.

Code	Fault	Cause	What to do
0030	EXTERNAL	Fault in external device. (This information is configured through one of the programmable digital inputs.)	Check external devices for faults. Check the setting of parameter *46.01* EXTERNAL FAULT.
0031	SAFE TORQUE OFF Programmable fault: *46.05* STO DIAGNOSTIC	Safe torque off function is active, ie, safety circuit signal(s) connected to connector X6 is lost • during the drive start or drive run or • while the drive is stopped and parameter *46.05* STO DIAGNOSTIC setting is *Fault*.	Check safety circuit connections. For more information, see the appropriate drive *Hardware manual*.
0032	OVERSPEED	Motor is turning faster than the highest allowed speed due to incorrectly set minimum/maximum speed, insufficient braking torque or changes in load when using torque reference.	Check minimum/maximum speed settings, parameters *20.01* ABS MAX SPEED. Check the adequacy of the motor braking torque. Check the applicability of torque control. Check the need for a brake chopper and resistor(s).
0033	BRAKE START TORQUE Programmable fault: *35.08* BRAKE FAULT FUNC	Mechanical brake fault. The fault is activated if the required motor starting torque, 35.07 BRAKE OPEN TORQ, is not achieved.	Check the brake open torque setting, parameter 35.07. Check drive torque and current limits. See parameter group *20 LIMITS* on page *233*.
0034	BRAKE NOT CLOSED MON1 Programmable fault: *35.08* BRAKE FAULT FUNC	Mechanical brake control fault. The fault is activated if brake monitoring is not as expected during brake closing.	Check the mechanical brake connection. Check mechanical brake settings, parameters *35.01*…*35.08*. To determine whether the problem is with the monitoring signal or brake: Check if the brake is closed or open.

Code	Fault	Cause	What to do
0035	BRAKE NOT OPEN MON1 Programmable fault: *35.08* BRAKE FAULT FUNC	Mechanical brake control fault. The fault is activated if brake monitoring is not as expected during brake opening.	Check the mechanical brake connection. Check mechanical brake settings, parameters *35.01*…*35.08*. To determine whether the problem is with the monitoring signal or brake: Check if the brake is closed or open.
0037	NVMEMCORRUPTED	Drive internal fault **Note:** This fault cannot be reset.	Check the fault logger for a fault code extension. See appropriate actions for each extension below.
	Fault code extension: 2051	Total number of parameters (including unused space between parameters) exceeds firmware maximum.	Move parameters from the firmware groups to the application groups. Reduce the number of parameters.
	Fault code extension: Other	Drive internal fault	Contact your local ABB representative.
0038	OPTION COMM LOSS	Communication between the drive and option module (FEN-xx and/or FIO-xx) is lost.	Check that option modules are properly connected to Slot 1 and (or) Slot 2. Check that option modules or Slot 1/2 connectors are not damaged. To determine whether a module or connector is damaged: Test each module individually in Slot 1 and Slot 2.
0039	ENCODER1	Encoder feedback fault	If the fault appears during the first start-up before encoder feedback is used: • Check the cable between the encoder and encoder interface module (FEN-xx) and the order of connector signal wires at both ends of cable.

Code	Fault	Cause	What to do
0039	ENCODER	Encoder feedback fault	If an absolute encoder, EnDat/Hiperface/SSI, with incremental sin/cos pulses is used, incorrect wiring can be located as follows: Disable serial link (zero position) by setting parameter *91.02* ABS ENC INTERF to *None* and test encoder operation: • If the encoder fault is not activated, check the serial link data wiring. Note that zero position is not taken into account when the serial link is disabled. • If the encoder fault is activated, check the serial link and sin/cos signal wiring. **Note:** Because only zero position is requested through serial link and during run, the position is updated according to sin/cos pulses. • Check encoder parameter settings. If the fault appears after encoder feedback has already been used or during a drive run: • Check that the encoder connection wiring or encoder is not damaged. • Check that encoder interface module (FEN-xx) connection or module is not damaged. • Check earthings (when disturbances are detected in communication between the encoder interface module and the encoder). For more information on encoders, see parameter groups: • *90 ENC MODULE SEL* (page *268*) • *91 ABSOL ENC CONF* (page *273*) • *92 RESOLVER CONF* (page *277*) • *93 PULSE ENC CONF* (page *278*).

Code	Fault	Cause	What to do
0045	FIELDBUS COMM Programmable fault: *50.02* COMM LOSS FUNC	Cyclical communication between the drive and fieldbus adapter module or between PLC and fieldbus adapter module is lost.	Check the status of fieldbus communication. See the appropriate fieldbus adapter module *User's manual*. Check fieldbus parameter settings. See parameter group *50 FIELDBUS* on page *251*. Check cable connections. Check if the communication master can communicate.
0046	FB MAPPING FILE	Drive internal fault	Contact your local ABB representative.
0047	MOTOR OVERTEMP Programmable fault: *46.07* MOT TEMP PROT	Measured motor temperature has exceeded the fault limit defined with parameter *46.10* MOT TEMP FLT LIM.	Check that the actual number of sensors corresponds to the value set with parameter *46.08* MOT TEMP SOURCE. Check motor ratings and load. Let the motor cool down. Ensure proper motor cooling: Check the cooling fan, clean cooling surfaces, etc. Check the value of the fault limit.
0049	AI SUPERVISION Programmable fault: *13.12* AI SUPERVISION	Analogue input AI1 or AI2 signal has reached the limit defined with parameter *13.13* AI SUPERVIS ACT.	Check the analogue input AI1/2 source and connections. Check analogue input AI1/2 minimum and maximum limit settings, parameters *13.02* and *13.03* / *13.07* and *13.08*.
0050	ENCODER CABLE Programmable fault: *90.05* ENC CABLE FAULT	Encoder cable fault detected.	Check the cable between FEN-xx interface and encoder. After any modifications in cabling, re-configure the interface by switching the drive power off and on, or by activating parameter *90.06* ENC PAR REFRESH.
0055	TECH LIB	Resettable fault generated by a technology library.	Refer to the documentation of the technology library.
0056	TECH LIB CRITICAL	Permanent fault generated by a technology library.	Refer to the documentation of the technology library.
0057	FORCED TRIP	Generic Drive Communication Profile trip command.	Check PLC status.

Code	Fault	Cause	What to do
0058	FIELDBUS PAR ERROR	The drive does not have a functionality requested by PLC, or the requested functionality has not been activated.	Check PLC programming. Check fieldbus parameter settings. See parameter group *50 FIELDBUS* on page *251*.
0061	SPEED FEEDBACK	No speed feedback is received.	Check the settings of the parameters in group *22 SPEED FEEDBACK*. Check encoder installation. See the description of fault *0039* (ENCODER1) for more information.
0067	FPGA ERROR1	Drive internal fault	Contact your local ABB representative.
0068	FPGA ERROR2	Drive internal fault	Contact your local ABB representative.
0069	ADC ERROR	Drive internal fault	Contact your local ABB representative.
0077	BRAKE NOT CLOSED MON2 Programmable fault: *35.08* BRAKE FAULT FUNC	Mechanical brake control fault. The fault is activated if brake monitoring is not as expected during brake closing.	Check the mechanical brake connection. Check mechanical brake settings, parameters *35.01*…*35.08*. To determine whether the problem is with the monitoring signal or brake: Check if the brake is closed or open.
0078	BRAKE NOT OPEN MON2 Programmable fault: *35.08* BRAKE FAULT FUNC	Mechanical brake control fault. The fault is activated if brake monitoring is not as expected during brake opening.	Check the mechanical brake connection. Check mechanical brake settings, parameters *35.01*…*35.08*. To determine whether the problem is with the monitoring signal or brake: Check if the brake is closed or open.
0201	T2 OVERLOAD	Firmware time level 2 overload **Note:** This fault cannot be reset.	Contact your local ABB representative.
0201	T3 OVERLOAD	Firmware time level 3 overload **Note:** This fault cannot be reset.	Contact your local ABB representative.
0203	T4 OVERLOAD	Firmware time level 4 overload **Note:** This fault cannot be reset.	Contact your local ABB representative.

Code	Fault	Cause	What to do
0204	T5 OVERLOAD	Firmware time level 5 overload **Note:** This fault cannot be reset.	Contact your local ABB representative.
0205	A1 OVERLOAD	Application time level 1 fault **Note:** This fault cannot be reset.	Contact your local ABB representative.
0206	A2 OVERLOAD	Application time level 2 fault **Note:** This fault cannot be reset.	Contact your local ABB representative.
0207	A1 INIT FAULT	Application task creation fault **Note:** This fault cannot be reset.	Contact your local ABB representative.
0208	A2 INIT FAULT	Application task creation fault **Note:** This fault cannot be reset.	Contact your local ABB representative.
0209	STACK ERROR	Drive internal fault **Note:** This fault cannot be reset.	Contact your local ABB representative.
0210	JMU MISSING	JMU Memory Unit is missing or broken.	Check that the JMU is properly installed. If the problem persists, replace JMU.
0301	UFF FILE READ	File read error **Note:** This fault cannot be reset.	Contact your local ABB representative.
0302	APPL DIR CREATION	Drive internal fault **Note:** This fault cannot be reset.	Contact your local ABB representative.
0303	FPGA CONFIG DIR	Drive internal fault **Note:** This fault cannot be reset.	Contact your local ABB representative.
0304	PU RATING ID	Drive internal fault **Note:** This fault cannot be reset.	Contact your local ABB representative.
0305	RATING DATABASE	Drive internal fault **Note:** This fault cannot be reset.	Contact your local ABB representative.

Code	Fault	Cause	What to do
0306	LICENSING	Drive internal fault **Note:** This fault cannot be reset.	Contact your local ABB representative.
0307	DEFAULT FILE	Drive internal fault **Note:** This fault cannot be reset.	Contact your local ABB representative.
0308	APPL FILE PAR CONF	Corrupted application file **Note:** This fault cannot be reset.	Reload the application. If the fault is still active, contact your local ABB representative.
0309	APPL LOADING	Application file incompatible or corrupted. **Note:** This fault cannot be reset.	Check the fault logger for a fault code extension. See appropriate actions for each extension below.
	Fault code extension: 8	Template used in the application incompatible with drive firmware.	Change the template of the application in DriveSPC.
	Fault code extension: 10	Parameters defined in the application conflict with existing drive parameters.	Check the application for conflicting parameters.
	Fault code extension: 35	Application memory full.	Contact your local ABB representative.
	Fault code extension: Other	Corrupted application file	Reload application. If fault is still active, contact your local ABB representative.
0310	USERSET LOAD	Loading of user set is not successfully completed because: • requested user set does not exist • user set is not compatible with the drive program • drive is switched off during loading.	Reload.
0311	USERSET SAVE	User set is not saved because of memory corruption.	Contact your local ABB representative.
0312	UFF OVERSIZE	UFF file is too big.	Contact your local ABB representative.
0313	UFF EOF	UFF file structure failure	Contact your local ABB representative.

Code	Fault	Cause	What to do
0314	TECH LIB INTERFACE	Incompatible firmware interface **Note:** This fault cannot be reset.	Contact your local ABB representative.
0315	RESTORE FILE	Restoration of backed-up parameters failed.	Contact your local ABB representative.
0316	DAPS MISMATCH	Mismatch between JCU Control Unit firmware and power unit logic versions.	Contact your local ABB representative.
0317	SOLUTION FAULT	Fault generated by function block SOLUTION_FAULT in the application program.	Check the usage of the SOLUTION_FAULT block in the application program.
601	SPEED MATCH *05.02* LIFT FW bit 0	Speed error is higher than defined with parameter *81.02* SPD STD DEV LVL in the steady state or defined with parameter *81.03* SPD RMP DEV LVL in the ramp state, and the time delay defined with parameter *81.04* SPEED MATCH DLY has elapsed. The speed controller is not following the speed reference.	Check ramp times. Check torque and current limit settings.
602	TORQUE PROVE *05.02* LIFT FW bit 1	Drive was not able to provide sufficient torque during a torque proving sequence. Control magnetising time is too low.	Check the motor and motor cables.
603	BRAKE SLIP *05.02* LIFT FW bit 2	Brake slipped while a torque proving sequence was taking place.	Check the brakes. Check whether the brakes are slipping in the brake closed condition.

Code	Fault	Cause	What to do
605	MOTOR STALL *05.02* LIFT FW bit 4	Motor actual speed is lower than defined with parameter *81.07* STALL SPEED LIM, the drive has exceeded the torque limits defined with parameters *81.05* STALL TORQ MAX and *81.06* STALL TORQ MIN, and the time delay defined with *81.08* STALL FAULT DLY has elapsed.	Check torque and current limit settings.

13

Maintenance

Contents of this chapter

This chapter contains preventive maintenance instructions.

Safety

WARNING! Read the *Safety instructions* on the first pages of this manual before performing any maintenance on the equipment. Ignoring the safety instructions can cause injury or death.

Maintenance intervals

The table below lists the routine maintenance intervals recommended by ABB. Consult a local ABB Service representative for more details. On the Internet, go to http://www.abb.com/drivesservices, select *Drive Services*, and *Maintenance and Field Services*.

Interval	Maintenance	Instruction
Every year of storage	DC capacitor reforming	See *Reforming the capacitors* on page *316*.
Every 6 to 12 months depending on the dustiness of the environment	Heatsink temperature check and cleaning	See *Heatsink* on page *314*.
Every year	Inspection of tightness of power connections	See pages *68*-*69*.
	Visual inspection of cooling fan	See *Cooling fan* on page *315*.

Every 6 years if the ambient temperature is higher than 40 °C (104 °F). Otherwise, **every 9 years**.	Cooling fan replacement	See *Cooling fan* on page *315*.
Every 10 years	Control panel battery replacement	The battery is housed on the rear of the control panel. Replace with a new CR 2032 battery.

Heatsink

The heatsink fins pick up dust from the cooling air. The drive runs into overtemperature warnings and faults if the heatsink is not clean. In a normal environment, the heatsink should be checked annually, in a dusty environment more often.

Clean the heatsink as follows (when necessary):

1. Remove the cooling fan (see section *Cooling fan*).
2. Blow clean compressed air (not humid) from bottom to top and simultaneously use a vacuum cleaner at the air outlet to trap the dust. **Note:** If there is a risk of the dust entering adjoining equipment, perform the cleaning in another room.
3. Refit the cooling fan.

Cooling fan

The actual lifespan of the cooling fan depends on the drive usage and ambient temperature. Fan failure can be predicted by the increasing noise from fan bearings and the gradual rise in the heatsink temperature in spite of heatsink cleaning. If the drive is operated in a critical part of a process, fan replacement is recommended once these symptoms start appearing. Replacement fans are available from ABB. Do not use other than ABB-specified spare parts.

Fan replacement (Frame size B)

Detach the power cable clamp plate and terminal blocks. Release the retaining clips (arrowed) carefully using a screwdriver. Pull the fan holder out. Disconnect the fan cable. Carefully bend the clips on the fan holder to free the fan.

Install the new fan in reverse order.

Note: The airflow direction is bottom-to-top. Install the fan so that the airflow arrow points up.

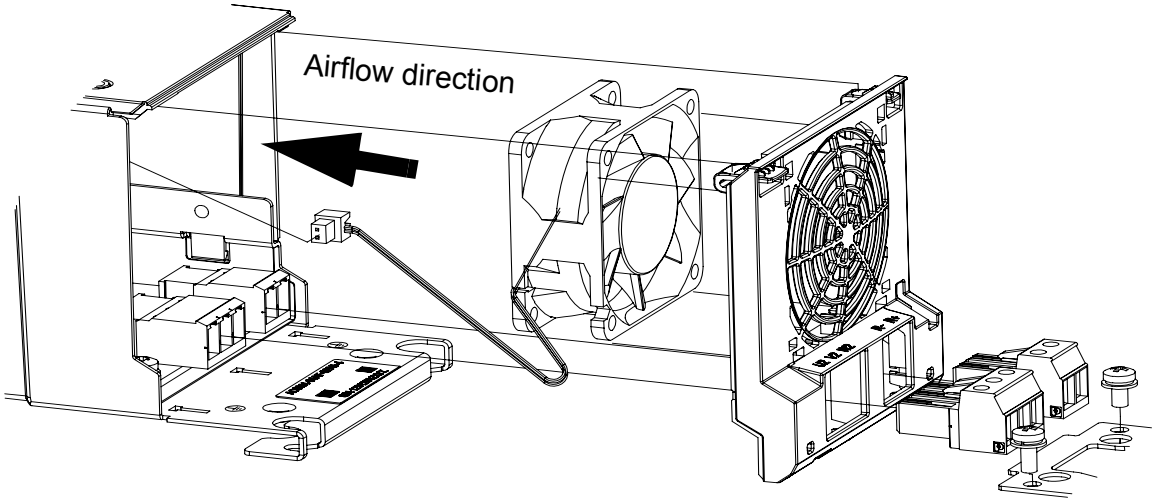

Fan replacement (Frames C and D)

To remove the fan, release the retaining clip (arrowed) carefully using a screwdriver. Pull the fan holder out. Disconnect the fan cable. Carefully bend the clips on the fan holder to free the fan.

Install the new fan in reverse order.

Note: The airflow direction is bottom-to-top. Install the fan so that the airflow arrow points up.

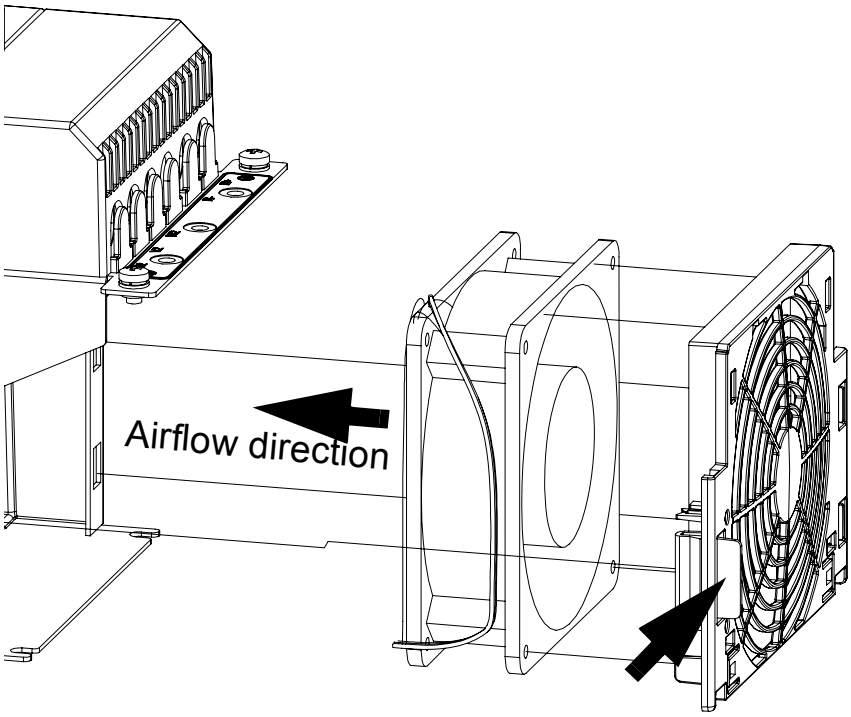

Reforming the capacitors

The capacitors must be reformed if the drive is stored for a year or more. See page *45* for information on finding out the manufacturing date. For information on reforming the capacitors, see *Converter module capacitor reforming instructions* (3BFE64059629 [English]).

Other maintenance actions

Transferring the memory unit to a new drive module

When a drive module is replaced, the parameter settings can be retained by transferring the memory unit from the defective drive module to the new module.

WARNING! Do not remove or insert the memory unit when the drive module is powered.

After power-up, the drive will scan the memory unit. If a different application program or different parameter settings are detected, they are copied to the drive. This may take a few moments; the LED display reads “L” while copying is in progress. See *The 7-segment display on the JCU control unit* on page *73*.

14

Technical data

Contents of this chapter

This chapter contains the technical specifications of the drive, e.g. the ratings, sizes and technical requirements, and provisions for fulfilling the requirements for CE and other markings.

Drive specifications

Drive type ACL30-04...	Frame size	Typical motor power[1] kW	Output ratings		Mains choke	EMC filter
			I_{2N}[2] A	I_{2max}[3] A		
-06A0	B	2.2	6	11	CHK-02	JFI-02
-09A0	B	3	9	16	CHK-03	JFI-03
-013A	B	5.5	13	22	CHK-03	JFI-03
-017A	B	7.5	17	28	CHK-04	JFI-03
-023A	C	11	23	36	CHK-05[4]/Internal	JFI-05
-030A	C	14	30	46	CHK-05[4]/Internal	JFI-05
-050A	D	22	50	80	CHK-07[4]/Internal	JFI-07
-070A	D	32	70	110	CHK-08[4]/Internal	JFI-07

[1] To achieve the rated motor power as in the above table, the rated current of the drive must be higher than or equal to the rated motor current.
[2] I_{2N} Nominal output current at 40 °C (104 °F).
[3] I_{2max} Maximum short-time output current. See *Cyclic loads* below.
[4] Internal mains choke is an option for C and D frames.

Derating

The continuous output currents stated above must be derated if any of the following conditions apply:

- the ambient temperature exceeds +40 °C (+104°F)
- the AC supply voltage is higher than 400 V
- the drive is installed higher than 1000 m above sea level.

Note: The final derating factor is a multiplication of all applicable derating factors.

Ambient temperature derating

In the temperature range +40…55 °C (+104…131 °F), the rated output current is derated by 1% for every added 1 °C (1.8 °F) as follows:

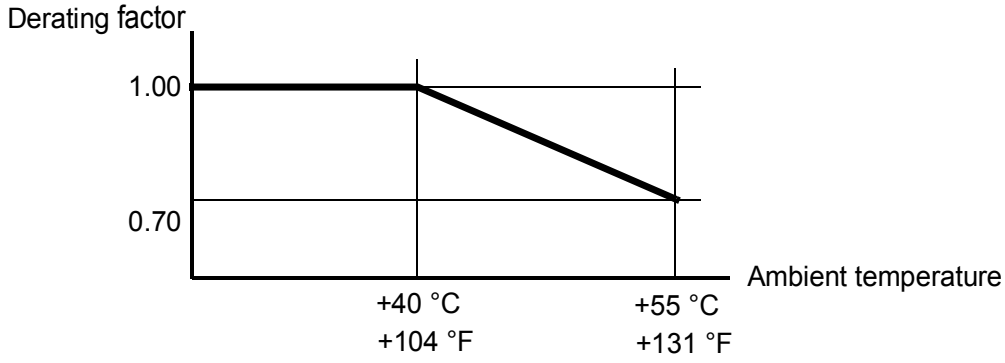

Supply voltage derating

With supply voltages above 400 V AC or 540 V DC, the continuous output current is derated linearly as follows:

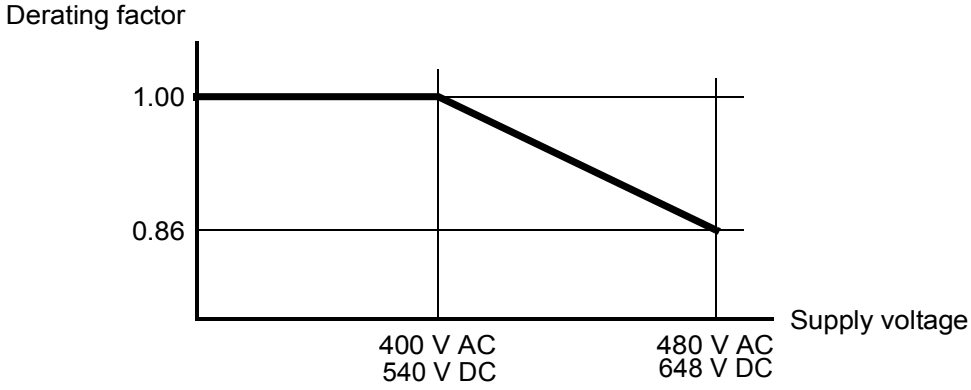

Altitude derating

At altitudes from 1000 to 4000 m (3300 to 13123 ft) above sea level, the derating is 1% for every 100 m (328 ft). For a more accurate derating, use the DriveSize PC tool.

Note: If the installation site is higher than 2000 m (6600 ft) above sea level, connection of the drive to an ungrounded (IT) or corner-grounded delta network is not allowed.

Cyclic loads

If the load cycle is shorter than 10 seconds, the thermal time constant of the heatsink (approximately 80 seconds) can be ignored, and the following procedure can be applied to find out whether the drive can handle the cycle.

1. Determine the rms value (I_{2rms}) of the output current over the whole load cycle.
2. Determine the maximum instantaneous rms value (I_{2peak}) of the output current during the load cycle.
3. Determine the point (I_{2rms}, I_{2peak}) on the graph below.

   If the point falls within the region bordered by a solid line, the load cycle is safe. For $I_{2contxk}$ and I_{2max}, use the ratings stated for the drive type and switching frequency used.

   If the point falls within the shaded area, a more detailed study is required.

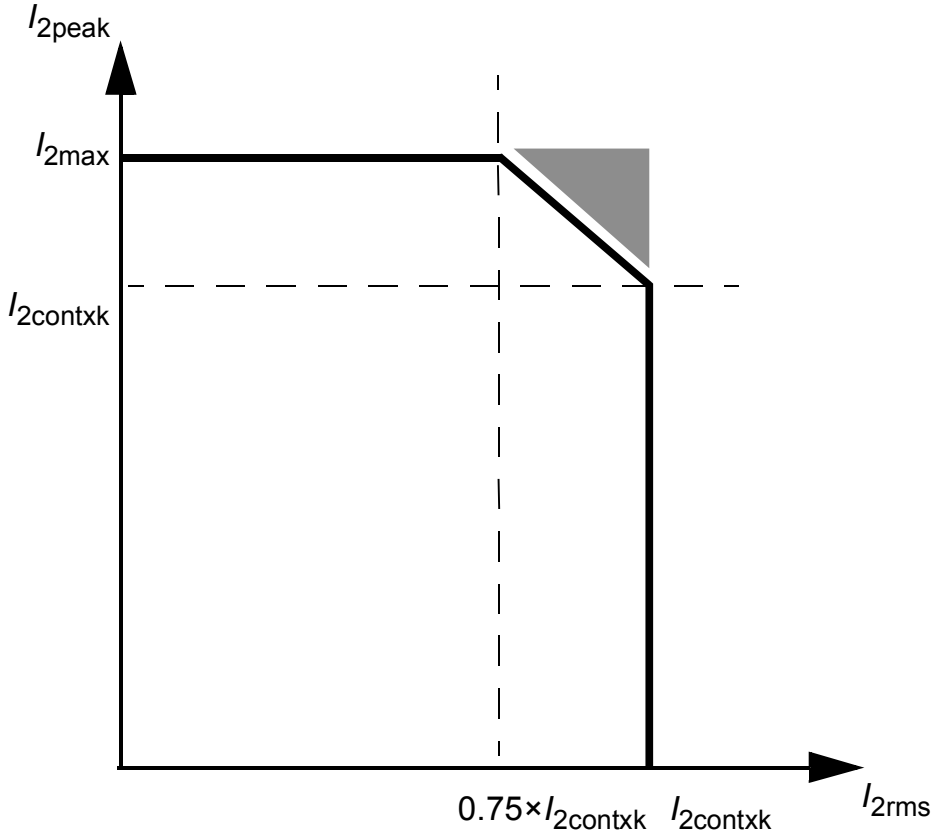

The above procedure can also be applied to longer load cycles by dividing the cycle into subcycles no longer than 10 seconds. If any of the subcycles fail the test, a more detailed study is required.

Dimensions and weights

See also chapter *Dimension drawings* on page *347.*

Frame size	Height (without cable clamp plates) mm (in.)	Height (with cable clamp plates) mm (in.)	Width mm (in.)	Depth (without options installed on JCU) mm (in.)	Depth (with options installed on JCU) mm (in.)	Weight kg (lbs)
B	380 (14.96)	476 (18.74)	100 (3.94)	223 (8.78)	246 (9.69)	4.8 (10.6)
C	467 (18.39)	558 (21.97)	165 (6.50)	225 (8.85)	248 (9.76)	10 (22.0)
D	467 (18.39)	644 (25.34)	220 (8.66)	225 (8.85)	248 (9.76)	17 (37.5)

Note: The wiring to the I/O options requires some 50 mm (2”) of additional depth.

Noise levels

Frame size	Noise level dBA
B	39
C	40
D	40

Supply cable fuses

Fuses for short circuit protection of the supply cable are listed below. The fuses also protect the adjoining equipment of the drive in case of a short circuit. Check that the operating time of the fuse is below 0.5 seconds. The operating time depends on the supply network impedance and the cross-sectional area and length of the supply cable. See also chapter *Planning the electrical installation*.

Note: Fuses with a higher current rating must not be used.

Drive type ACL30-04...	**Input current (A)**	**IEC fuse**			**UL fuse**			**Cross-sectional area of cable**	
		Rated current (A)	**Voltage (V)**	**Class**	**Rated current (A)**	**Voltage (V)**	**UL Class**	**mm^2**	**AWG**
-06A0	7.0*	10	500	gG	10	600	T	1.5 … 4	16…12
-09A0	10.5*	16	500	gG	15	600	T	1.5 … 10	16…8
-013A	15.2*	20	500	gG	20	600	T	1.5 … 10	16…8
-017A	19.8*	25	500	gG	25	600	T	1.5 … 10	16…8
-023A	17.7	25	500	gG	25	600	T	6 ... 35	9…2
-030A	23.0	32	500	gG	35	600	T	6 ... 35	9…2
-050A	41.8	50	500	gG	50	600	T	10 ... 70	6…2/0
-070A	58.4	80	500	gG	80	600	T	10 ... 70	6…2/0

*Without mains choke

PDM-00425726

AC input (supply) connection

Voltage (U_1)	180…480 V AC 3-phase
Frequency	50…60 Hz ±5%
Network type	Grounded (TN, TT) or ungrounded (IT). **Note:** If the installation site is higher than 2000 m (6600 ft) above sea level, connection of the drive to an ungrounded (IT) or corner-grounded delta network is not allowed.
Imbalance	Max. ±3% of nominal phase to phase input voltage
Fundamental power factor (cos phi_1)	0.98 (at nominal load)
Terminals	Frame B: Detachable screw terminal block for 0.5…6 mm^2 wire. Frames C and D: Screw lugs for 6…70 mm^2 wire included. Suitable crimp lugs can be used instead.

Motor connection

Motor types	Asynchronous induction motors, synchronous permanent magnet motors
Frequency	0…500 Hz
Current	See section *Drive specifications.*
Switching frequency	Selectable between 4 … 12 kHz.
Maximum motor cable length	50 m (164 ft) with screened cable 75 m (246 ft) with unscreened cable
Terminals	Frame B: Detachable screw terminal block for 0.5…6 mm^2 wire. Frames C and D: Screw lugs for 6…70 mm^2 wire included. Suitable crimp lugs can be used instead.

JCU Control Unit

Power supply	24 V (±10%) DC, 1.6 A Supplied from the power unit of the drive, or from external power supply through connector X1 (pitch 3.5 mm, wire size 1.5 mm^2).
Relay output (X2)	Connector pitch 5 mm, wire size 2.5 mm^2 250 V AC / 30 V DC, 2 A Protected by varistors
Digital inputs DI1…DI6 (X3)	Connector pitch 3.5 mm, wire size 1.5 mm^2 Logic levels: “0” < 5 V, “1” > 15 V R_{in}: 2.0 kohm Filtering: Adjustable, 0.25 ms min. (see also *Firmware Manual)*
Digital inputs/outputs DIO1…DIO3 (X3). Input/output mode selection by parameters. DIO2 can be configured as a frequency input (0…32 kHz). DIO3 can be configured as a frequency output. See parameter group 12.	Connector pitch 3.5 mm, wire size 1.5 mm^2 As inputs: Logic levels: “0” < 5 V, “1” > 15 V R_{in}: 2.0 kohm Filtering: Adjustable, 0.25 ms min. (see also *Firmware Manual)* As outputs: Total output current limited by auxiliary voltage outputs to 200 mA Output type: Open emitter

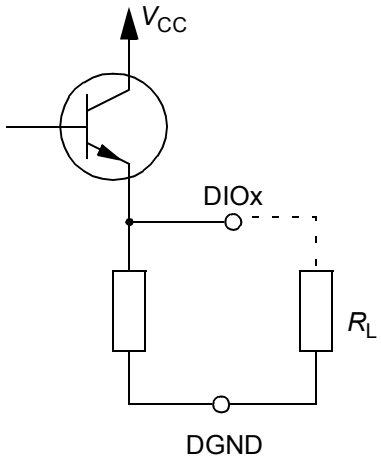

Analogue inputs AI1 and AI2 (X4). Current/voltage input mode selection by jumpers. See page 71.	Connector pitch 3.5 mm, wire size 1.5 mm^2 Current input: –20…20 mA, $R_{in:}$ 100 ohm Voltage input: –10…10 V, R_{in}: 200 kohm Differential inputs, common mode ±20 V Sampling interval per channel: 0.25 ms Filtering: Adjustable, 0.25 ms min. Resolution: 11 bit + sign bit Inaccuracy: 1% of full scale range
Thermistor input (X4)	Connector pitch 3.5 mm, wire size 1.5 mm^2 Input devices: PTC or KTY84 thermistor Up to three PTCs can be connected in series KTY84 thermistor: Inaccuracy 5 °C No safety insulation (see page 72)
Analogue outputs AO1 and AO2 (X4)	Connector pitch 3.5 mm, wire size 1.5 mm^2 AO1 (current): 0…20 mA, Rload < 500 ohm AO2 (voltage): –10…10 V, Rload > 1 kohm Frequency range: 0…800 Hz Resolution: 11 bit + sign bit Inaccuracy: 2% of full scale range
Reference voltage (VREF) for analogue inputs	Connector pitch 3.5 mm, wire size 1.5 mm^2 10 V ±1% and –10 V ±1%, Rload > 1 kohm
Drive to drive link (X5)	Connector pitch 3.5 mm, wire size 1.5 mm^2 Physical layer: RS-485 Termination by jumper
Safe Torque Off connection (X6)	Connector pitch 3.5 mm, wire size 1.5 mm^2 For the drive to start, both connections (OUT1 to IN1, and OUT2 to IN2) must be closed
Control panel / PC connection (X7)	Connector: RJ-45 Cable length < 3 m

Efficiency	
	Approximately 98% at nominal power level

Cooling	
Method	Internal fan, flow from bottom to top. Air-cooled heatsink.
Free space around the unit	See *Planning the cabinet installation*: *Main dimensions and free space requirements*

Degrees of protection	
	IP20 (UL open type). *See Planning the cabinet installation*: *Cooling and degrees of protection.*

Ambient conditions

Environmental limits for the drive are given below. The drive is to be used in a heated, indoor, controlled environment.

	Operation installed for stationary use	**Storage** in the protective package	**Transportation** in the protective package
Installation site altitude	0 to 4000 m (6600 ft) above sea level. [See also section *Altitude derating* on page 320.]	-	-
Air temperature	-10 to +55°C (14 to 131°F). No frost allowed. See section *Derating* on page 320.	-40 to +70°C (-40 to +158°F)	-40 to +70°C (-40 to +158°F)
Relative humidity	0 to 95%	Max. 95%	Max. 95%
	No condensation allowed. Maximum allowed relative humidity is 60% in the presence of corrosive gases.		
Contamination levels (IEC 60721-3-3, IEC 60721-3-2, IEC 60721-3-1)	No conductive dust allowed.		
	According to IEC 60721-3-3: Chemical gases: Class 3C2 Solid particles: Class 3S2 The drive must be installed in clean air according to enclosure classification. Cooling air must be clean, free from corrosive materials and electrically conductive dust.	According to IEC 60721-3-1: Chemical cases: Class 1C2 Solid particles: Class 1S2	According to IEC 60721-3-2: Chemical cases: Class 2C2 Solid particles: Class 2S2
Sinusoidal vibration (IEC 60721-3-3)	Tested according to IEC 60721-3-3, mechanical conditions: Class 3M4 2…9 Hz: 3.0 mm (0.12”) 9…200 Hz: 10 m/s^2 (33 ft/s^2)	–	–
Shock (IEC 60068-2-27, ISTA 1A)	–	According to ISTA 1A. Max. 100 m/s^2 (330 ft/s^2), 11 ms	According to ISTA 1A. Max. 100 m/s^2 (330 ft/s^2), 11 ms
Free fall	Not allowed	76 cm (30”)	76 cm (30”)

Materials

Drive enclosure	• PC/ABS, colour NCS 1502-Y (RAL 9002 / PMS 420 C) • hot-dip zinc coated steel sheet • extruded aluminium AlSi.
Packaging	Corrugated cardboard, PP bands.
Disposal	The drive contains raw materials that should be recycled to preserve energy and natural resources. The package materials are environmentally compatible and recyclable. All metal parts can be recycled. The plastic parts can either be recycled or burned under controlled circumstances, according to local regulations. Most recyclable parts are marked with recycling marks. If recycling is not feasible, all parts excluding electrolytic capacitors and printed circuit boards can be landfilled. The DC capacitors contain electrolyte, which is classified as hazardous waste within the EU. They must be removed and handled according to local regulations. For further information on environmental aspects and more detailed recycling instructions, please contact your local ABB distributor.

Applicable standards

	The drive complies with the following standards. The compliance with the European Low Voltage Directive is verified according to standards EN 50178 and EN 60204-1.
EN 50178 (1997)	Electronic equipment for use in power installations
IEC 60204-1 (2005), modified	Safety of machinery. Electrical equipment of machines. Part 1: General requirements. *Provisions for compliance:* The final assembler of the machine is responsible for installing - an emergency-stop device - a supply disconnecting device - the ACL30 into a cabinet.
EN 60529: 1991 (IEC 60529)	Degrees of protection provided by enclosures (IP code)
IEC 60664-1 (2007), Edition 2.0	Insulation coordination for equipment within low-voltage systems. Part 1: Principles, requirements and tests.
IEC 61800-3 (2004)	Adjustable speed electrical power drive systems. Part 3: EMC requirements and specific test methods.
EN 61800-5-1 (2003)	Adjustable speed electrical power drive systems. Part 5-1: Safety requirements. Electrical, thermal and energy *Provisions for compliance:* The final assembler of the machine is responsible for installing the ACL30 in a cabinet that is protected to IP2X (IP3X for top surfaces for vertical access).
prEN 61800-5-2	Adjustable speed electrical power drive systems. Part 5-2: Safety requirements. Functional

CE marking

A CE mark is attached to the drive to verify that the drive follows the provisions of the European Low Voltage, EMC and RoHS Directives. The CE marking also verifies that the drive, in regard to its safety functions (such as Safe torque off), conforms with the Machinery Directive as a safety component.

Compliance with the European Low Voltage Directive

The compliance with the European Low Voltage Directive is verified according to standards EN 60204-1 and EN 61800-5-1.

Compliance with the European EMC Directive

The EMC Directive defines the requirements for immunity and emissions of electrical equipment used within the European Union. The EMC product standard (EN 61800-3:2004) covers requirements stated for drives. See section *Compliance with EN 61800-3:2004* below.

The cabinet builder is responsible for the compliance of the drive system with the European EMC Directive. For information on items to consider, see:

- Subsections *First environment (drive of category C2)*; *Second environment (drive of category C3)*; and *Second environment (drive of category C4)* below
- Chapter *Planning the electrical installation* in this manual
- *Technical Guide No. 3 – EMC Compliant Installation and Configuration for a Power Drive System* (3AFE61348280 [English]).

Compliance with the Machinery Directive

The drive is an electronic product which is covered by the European Low Voltage Directive. However, the drive includes the Safe torque off function and can be equipped with other safety functions for machinery which, as safety components, are in the scope of the Machinery Directive. These functions of the drive comply with European harmonized standards such as EN 61800-5-2.

Compliance with EN 61800-3:2004

Definitions

EMC stands for **E**lectro**m**agnetic **C**ompatibility. It is the ability of electrical/electronic equipment to operate without problems within an electromagnetic environment. Likewise, the equipment must not disturb or interfere with any other product or system within its locality.

First environment includes domestic premises. It also includes establishments directly connected without intermediate transformers to a low-voltage network which supplies buildings used for domestic purposes.

Second environment includes all establishments other than those directly connected to a low-voltage network which supplies buildings used for domestic purposes.

Drive of category C2. Power drive system with rated voltage less than 1000 V which is neither a plug-in device nor a movable device and, when used in the first environment, is intended to be installed and commissioned only by a professional.

Drive of category C3. Power drive system with rated voltage less than 1000 V, intended for use in the second environment and not intended for use in the first environment.

Drive of category C4. Power drive system with rated voltage equal to or above 1000 V, or rated current equal to or above 400 A, or intended for use in complex systems in the second environment.

First environment (drive of category C2)

WARNING! The drive may cause radio interference if used in a residential or domestic environment. The user is required to take measures to prevent interference, in addition to the requirements for CE compliance listed above.

The drive complies with the standard with the following provisions:

1. The drive is equipped with external EMC filter JFI-0x (optional accessory to be ordered separately, see chapter *EMC filters*).
2. The motor and control cables are selected as specified in chapter *Planning the electrical installation*.
3. The drive is installed according to the instructions given in this manual.
4. Motor cable length does not exceed 50 metres (164 feet).

Note: It is not allowed to use the optional EMC filter in these conditions:

- on IT (ungrounded) systems, because the supply network gets connected to the ground potential through EMC filter capacitors which may cause danger or damage the drive.
- on a corner-grounded TN system as this would damage the drive.

Second environment (drive of category C3)

The drive complies with the standard with the following provisions:

1. The drive is equipped with optional mains filter JFI-xx.
2. The motor and control cables are selected as specified in chapter *Planning the electrical installation*.
3. The drive is installed according to the instructions given in this manual.
4. Motor cable length does not exceed 50 metres (164 ft).

Second environment (drive of category C4)

The drive complies with the standard with the following provisions:

1. It is ensured that no excessive emission is propagated to neighbouring low-voltage networks. In some cases, the natural suppression in transformers and cables is sufficient. If in doubt, a supply transformer with static screening between the primary and secondary windings can be used.

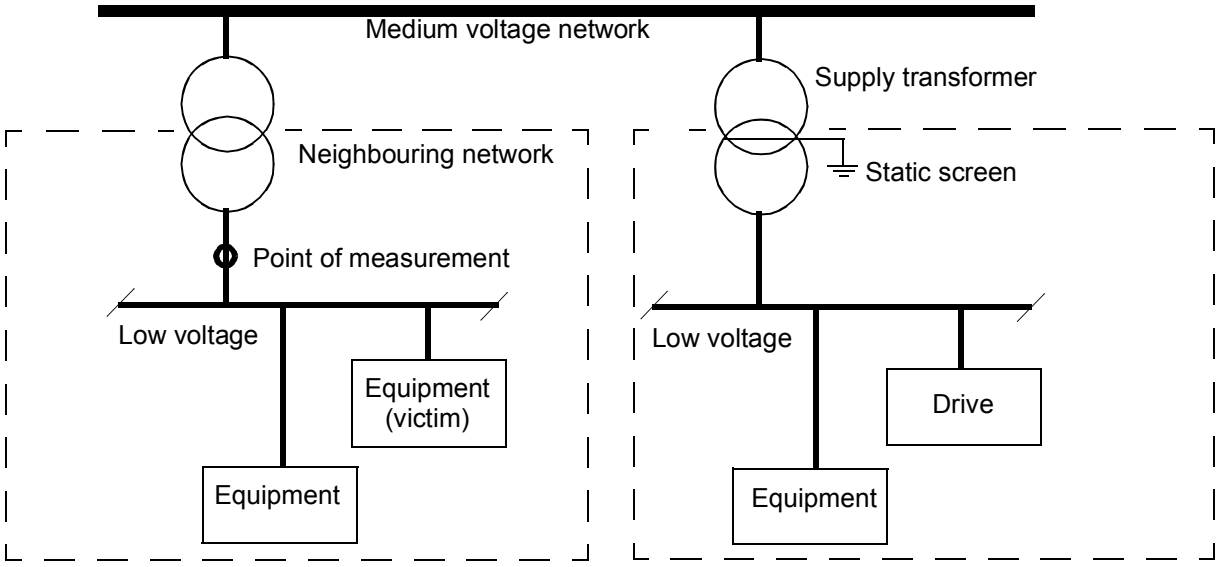

2. An EMC plan for preventing disturbances is drawn up for the installation. A template is available from the local ABB representative.
3. The motor and control cables are selected as specified in chapter *Planning the electrical installation*.
4. The drive is installed according to the instructions given in this manual.

U.S. patents

This product is protected by one or more of the following US patents:

4,920,306	5,301,085	5,463,302	5,532,568	5,521,483	5,589,754
5,612,604	5,654,624	5,799,805	5,940,286	5,942,874	5,952,613
6,094,364	6,147,887	6,175,256	6,184,740	6,195,274	6,229,356
6,252,436	6,265,724	6,305,464	6,313,599	6,316,896	6,335,607
6,370,049	6,396,236	6,448,735	6,498,452	6,552,510	6,597,148
6,741,059	6,774,758	6,844,794	6,856,502	6,859,374	6,922,883
6,940,253	6,934,169	6,956,352	6,958,923	6,967,453	6,972,976
6,977,449	6,984,958	6,985,371	6,992,908	6,999,329	7,023,160
7,034,510	7,036,223	7,045,987	7,057,908	7,059,390	7,067,997
7,082,374	7,084,604	7,098,623	7,102,325	D503,931	D510,319
D510,320	D511,137	D511,150	D512,026	D512,696	D521,466

Other patents pending

15

The Safe torque off function

The drive supports the Safe torque off function. For more information, see *Safe torque off function for ACL30 drive application guide* (3AXD50000045959 [English]).

16

Mains chokes

Contents of this chapter

This chapter describes how to select and install mains chokes for the drive module. The chapter also contains the relevant technical data.

When is a mains choke required?

The mains choke typically

- reduces harmonics in the input current
- reduces the r.m.s. input current
- reduces supply disturbance and low-frequency interference.

The ACL30 does not necessarily require a mains choke for operation. The need for an external choke should be determined on a case-by-case basis. The drive modules of frame sizes C and D have an internal mains choke as an option.

Selecting the mains choke

Drive type ACL30-04...	Frame	Type	Inductance µH
-06A0	B	CHK-02	4610
-09A0	B	CHK-03	2700
-013A			
-017A	B	CHK-04	1475
-023A	C	CHK-05/Internal	1130
-030A			
-050A	D	CHK-07/Internal	450
-070A		CHK-08/Internal	355

Degree of protection

IP20

Dimensions and weights

See dimension drawings of *Mains chokes – CHK-0x* on page *353*.

For dimensions, wire sizes and tightening torques, see *Mains chokes – CHK-0x* on page *353*.

Installation guidelines

- If an EMC filter is also installed, the mains choke is connected between the supply and the EMC filter. See the diagram below.
- For optimal operation of the choke, the drive and the choke must be mounted on the same conductive surface.
- Make sure the choke does not block the airflow through the drive module, and that the air rising from the choke is deflected away from the air inlet of the drive module
- Keep the cable between the drive and the choke as short as possible.

WARNING! The surface of the mains choke becomes hot when in use.

Connection diagram

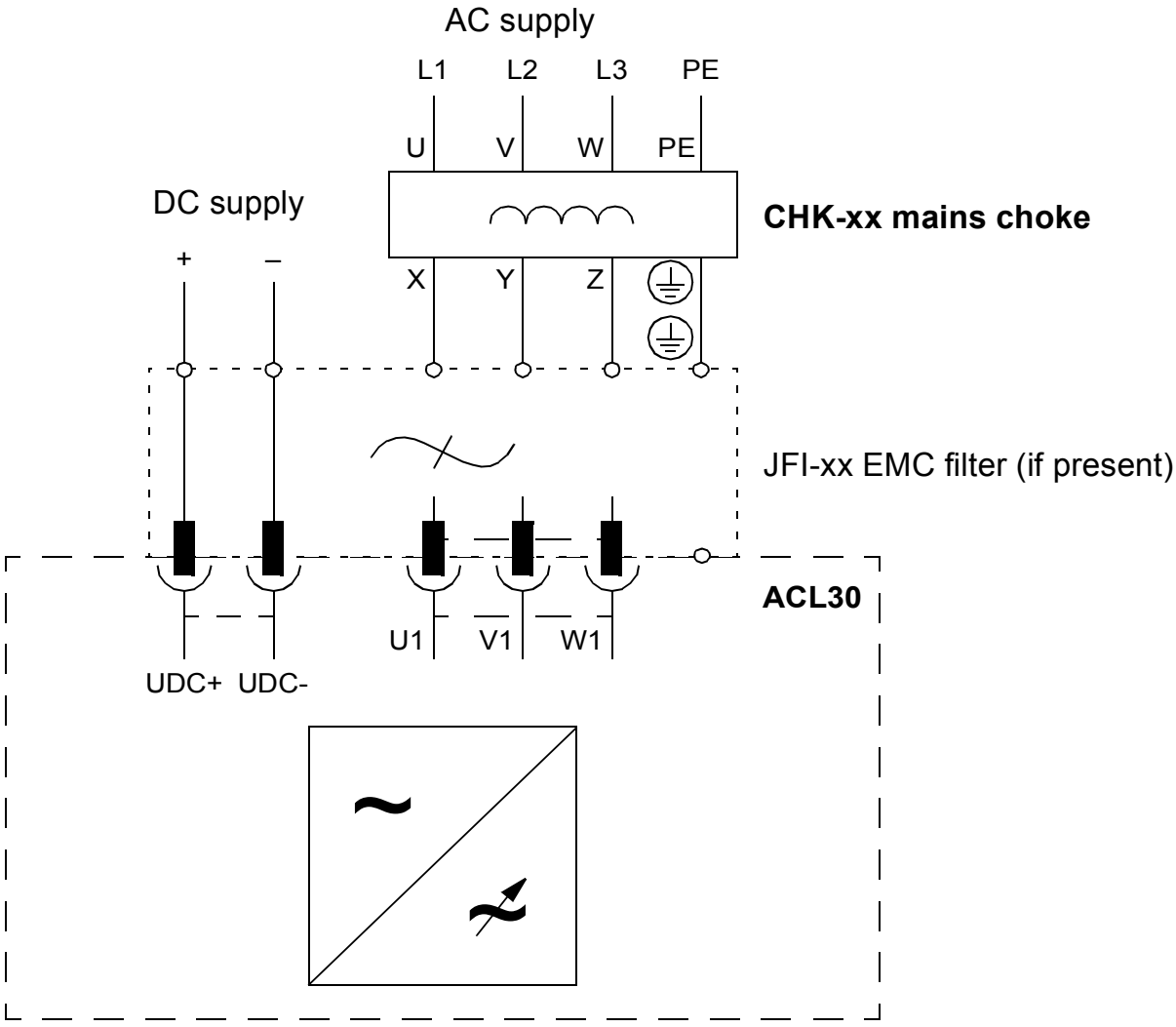

17

EMC filters

Contents of this chapter

This chapter describes how to select and install EMC filters for the drive module. The chapter also contains the relevant technical data.

EMC standard

The EMC product standard (EN 61800-3:2004) covers the specific EMC requirements stated for drives (tested with motor and cable) within the EU. EMC standards such as EN 55011 or EN 61000-6-3/4 apply to industrial and household equipment and systems including drive components inside. Drive units complying with the requirements of EN 61800-3 are always compliant with comparable categories in EN 55011 and EN 61000-6-3/4, but not necessarily vice versa.
EN 55011 and EN 61000-6-3/4 do neither specify cable length nor require a motor to be connected as a load. The emission limits are comparable according to the following table.

EMC standards in general	
EN 61800-3:2004, product standard	**EN 55011, product family standard for industrial, scientific and medical (ISM) equipment**
Category C1	Group 1 Class B
Category C2	Group 1 Class A
Category C3	Group 2 Class A
Category C4	Not applicable

An external EMC filter of the type JFI-0x is required to meet the category C2 level with the drive module installation, including a motor with a maximum 100 meters cable. This level corresponds to the A limits for Group 1 equipment according to EN 55011.

WARNING! An EMC filter must not be installed if the drive is connected to an IT power system (i.e. an ungrounded, or a high resistance grounded [over 30 ohm] power system) or a corner-grounded TN system.

Selecting EMC filters

Drive type ACL30-04...	Frame	Filter type
		EN 61800-3: 2004 Category C2
-06A0	B	JFI-02*
-09A0	B	JFI-03*
-013A		
-017A		
-023A	C	JFI-05*
-030A		
-050A	D	JFI-07*
-070A		

*External filter; to be ordered separately

Degree of protection

IP20

Dimensions and weights

See dimension drawing of *EMC filters – JFI-0x* on page *354*.

For data of dimensions, wire sizes and tightening torques, see *EMC filter – JFI-0x dimensions* on page *355*.

JFI-0x (Frames B…D, category C2) installation

Installation guidelines

- If a mains choke is also installed, the EMC filter is connected between the mains choke and the drive module. See the connection diagram below.
- For optimal operation of the filter, the drive and the filter must be mounted on the same conductive surface.
- Make sure the filter does not block the airflow through the drive module.
- Keep the cable between the drive and the filter as short as possible.

Connection diagram

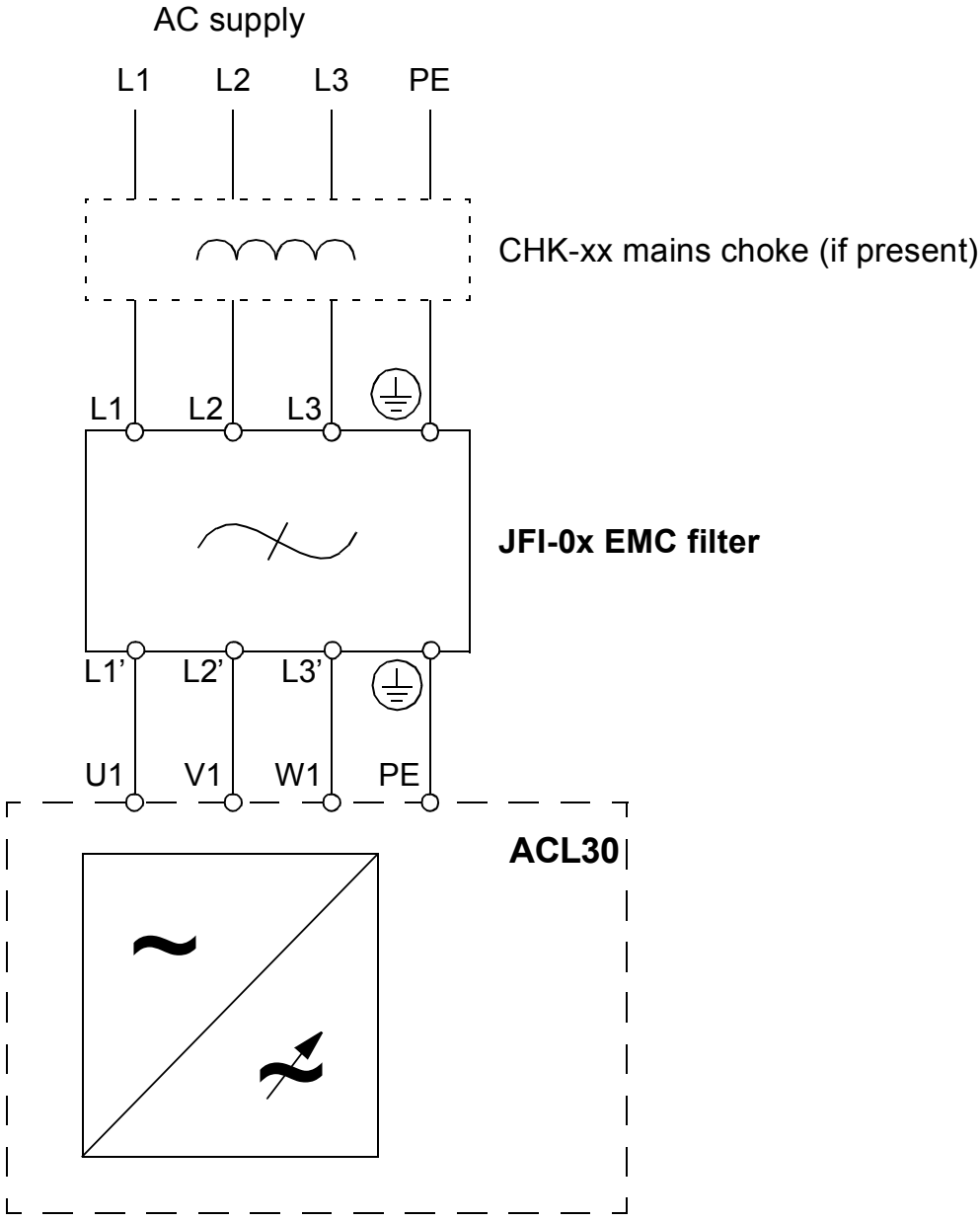

18

Resistor braking

Contents of this chapter

This chapter describes how to select, protect and wire brake choppers and resistors with the ACL30 drive. It also provides technical data for selecting brake choppers and resistors.

Brake choppers and resistors

Brake choppers

The ACL30 drives have a built-in brake chopper as standard equipment to handle the energy generated by a decelerating motor.

When the brake chopper is enabled and a resistor is connected, the chopper starts conducting when the DC link voltage of the drive reaches low limit. The maximum braking power is achieved at high limit.

Low and high limits can be calculated:

Low limit = 1.35 * 1.25 * USED SUPPLY VOLT - 30

High limit = Low limit + 60

Selecting a brake resistor

To select a brake resistor, calculate the following:

- maximum power generated by the motor during braking
- continuous power based on the braking duty cycle
- braking energy during the duty cycle.

Pre-selected resistors are available from ABB as shown in the *Brake resistor selection table* below. If the listed resistor is not sufficient for the application, a custom resistor can be selected within the limits imposed by the internal brake chopper of the ACL30 drive, based on the following rules.

Apply the following rules:	☑
Check the resistance of the custom resistor is at least R_{min}. You can calculate the braking power capacity with different resistance values using the following formula: $P_{max} < \frac{U_{DC}^2}{R}$ where, U_{DC} = 840 V. **WARNING!** Never use a brake resistor with a resistance below the value specified for the particular drive type. The drive and the chopper cannot handle the overcurrent caused by the low resistance.	☐
Make sure the maximum braking power does not exceed P_{brmax} at any point.	☐
Limit the average braking power within P_{brcont}.	☐
Do not exceed the braking energy dissipation capacity of the selected resistor.	☐
Protect the resistor from thermal overload. See *Contactor protection of drive* on page *345*.	☐

Brake resistor selection table

The ratings apply at an ambient temperature of 40 °C (104 °F).

Drive type ACL30-04...	**Frame size**	**R_{min} (ohm)**	**Type**
-06A0	B	120	JBR-01
-09A0	B	80	JBR-03
-013A	B	40	JBR-04
-017A			
-023A	C	20	JBR-05
-030A			
-050A	D	13	JBR-06
-070A			

R_{min} – The minimum allowed resistance of the braking resistor.

Installing and wiring the resistor

Install all resistors outside the drive module in a place where they are cooled sufficiently. Do not block the airflow to other equipments, or dissipate hot air into the air inlets of other equipments.

WARNING! The materials near the brake resistor must be non-flammable. The surface temperature of the resistor may rise above 200 °C (400 °F), and the temperature of the air flowing from the resistor is hundreds of degrees Celsius. Protect the resistor against contact.

The maximum length of the resistor cable(s) is 20 m (65 ft). For the connections, see section *Connecting the power cables* on page *64*.

Contactor protection of drive

For safety reasons, equip the drive with a main contactor. Wire the contactor so that it opens in case the resistor overheats. This is essential for safety since the drive will not otherwise be able to interrupt the main supply if the chopper remains conductive in a fault situation.

Below is a simple example wiring diagram.

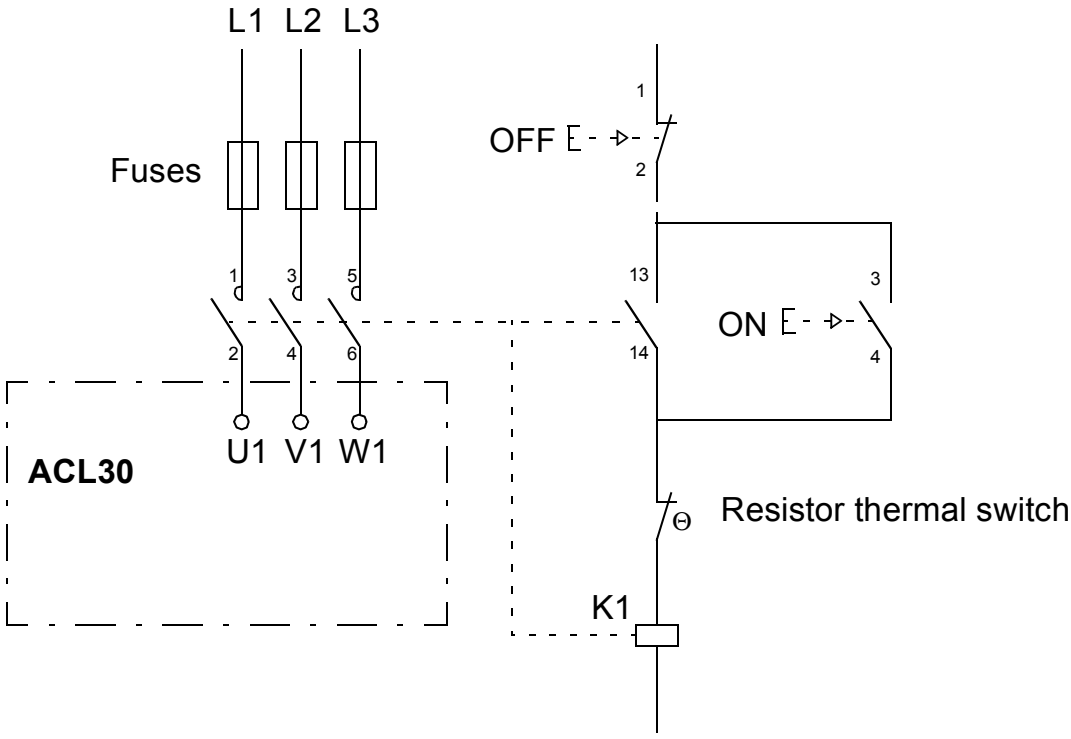

Braking circuit commissioning

1. Enable the brake chopper function from parameter group 48 Brake chopper.

   Note: Make sure the brake resistor is connected.

2. Adjust any other relevant parameters in the group 48 Brake chopper.

WARNING! If the drive is equipped with a brake chopper but the chopper is not enabled by parameter setting, the internal thermal protection of the drive against resistor overheating is not in use. In this case, the brake resistor must be disconnected.

19

Dimension drawings

Contents of this chapter

Dimension drawings of the drive module and related accessories are shown below. The dimensions are given in millimetres and [inches].

See,

- *Frame size B* on page *348*
- *Frame size C* on page *350*
- *Frame size D* on page *352*
- *Mains chokes – CHK-0x* on page *353*
- *EMC filters – JFI-0x* on page *354*
- *Brake resistors – JBR-xx* on page *356*

Frame size B

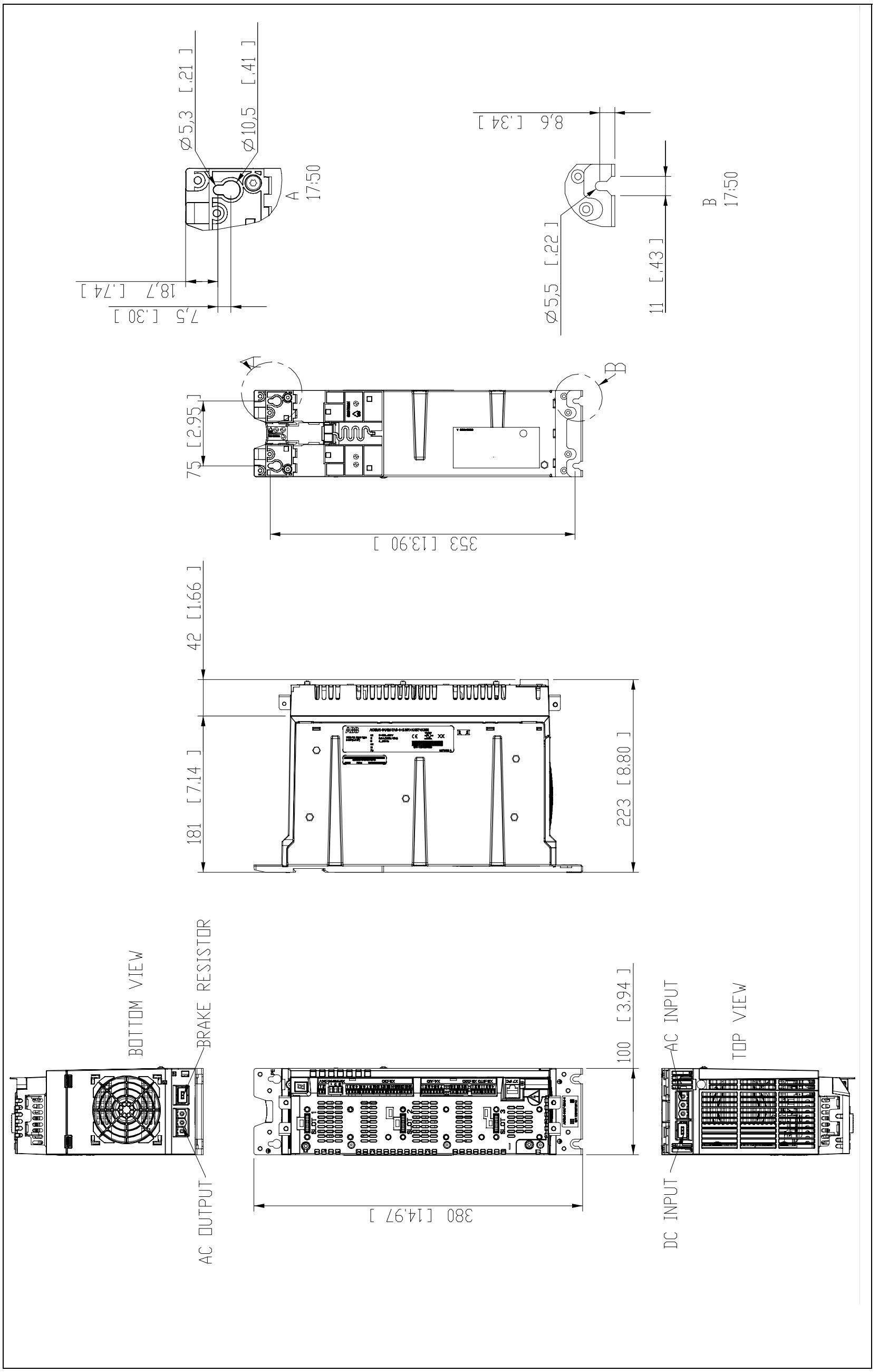
Ø5,3 [.21]
Ø10,5 [.41]
A
17:50
18,7 [.74]
7,5 [.30]
8,6 [.34]
Ø5,5 [.22]
11 [.43]
B
17:50
A
B
75 [2.95]
353 [13.90]
42 [1.66]
181 [7.14]
223 [8.80]
BOTTOM VIEW
BRAKE RESISTOR
AC OUTPUT
380 [14.97]
100 [3.94]
AC INPUT
DC INPUT
TOP VIEW

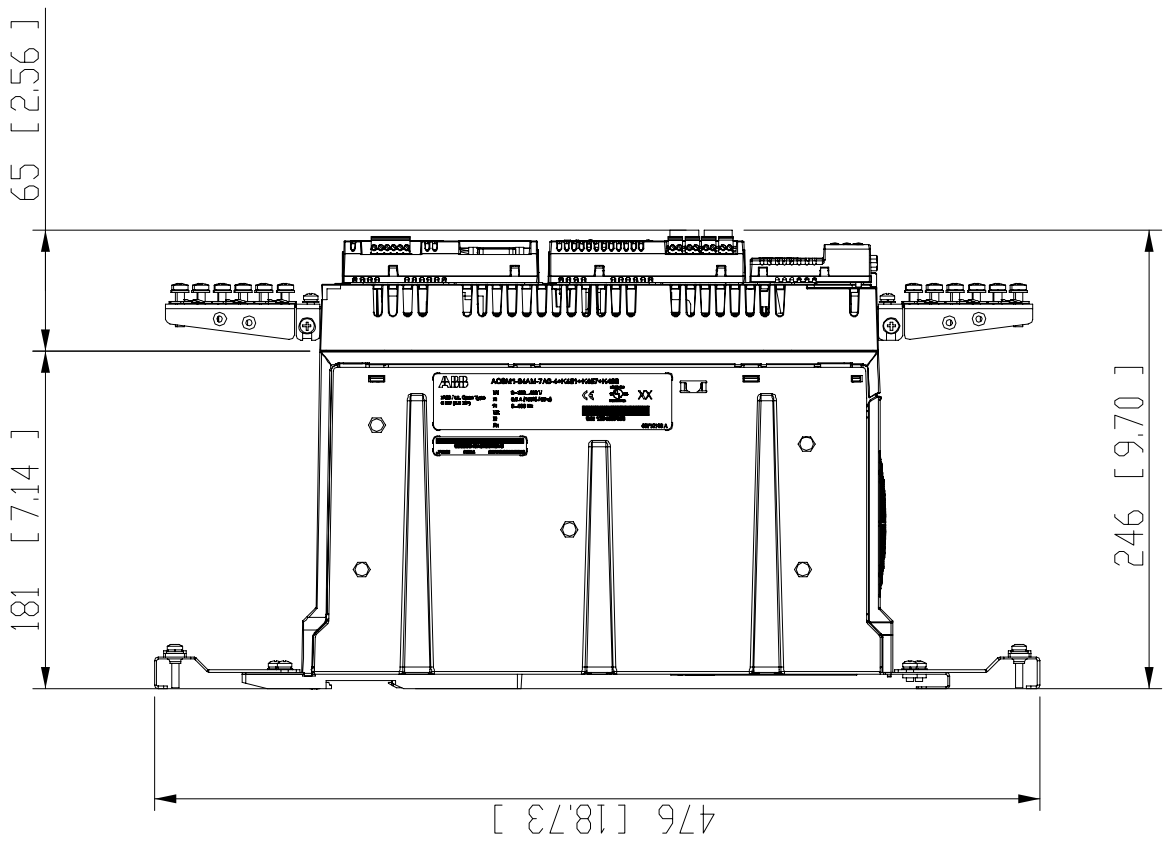
65 [2.56]
181 [7.14]
246 [9.70]
476 [18.73]

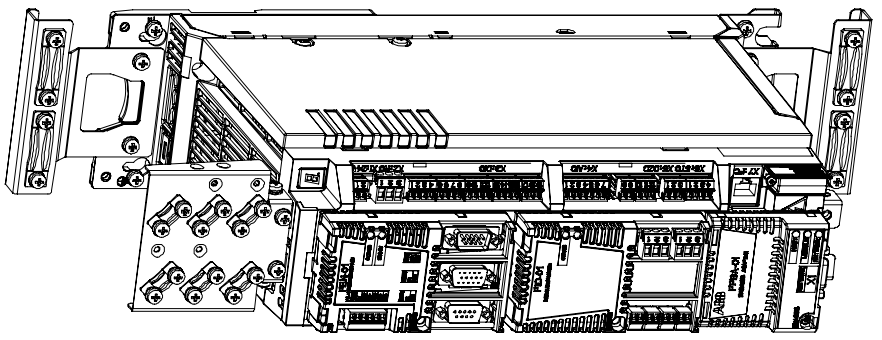

Frame size C

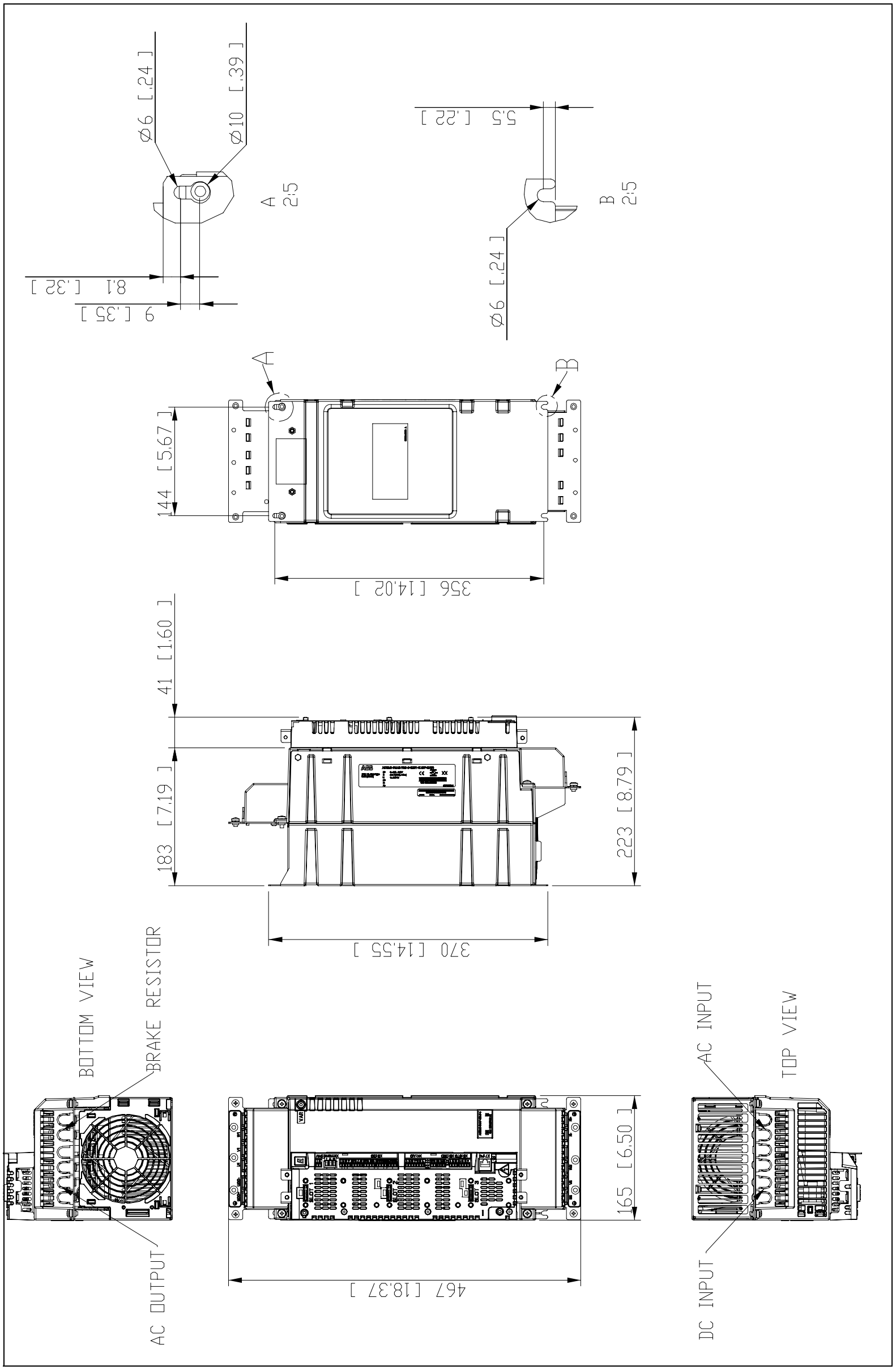
Ø6 [.24]
Ø10 [.39]
A
2:5
9 [.35]
8,1 [.32]
5,5 [.22]
Ø6 [.24]
B
2:5
A
B
144 [5.67]
356 [14.02]
41 [1.60]
183 [7.19]
223 [8.79]
370 [14.55]
BOTTOM VIEW
BRAKE RESISTOR
AC OUTPUT
165 [6.50]
467 [18.37]
AC INPUT
TOP VIEW
DC INPUT

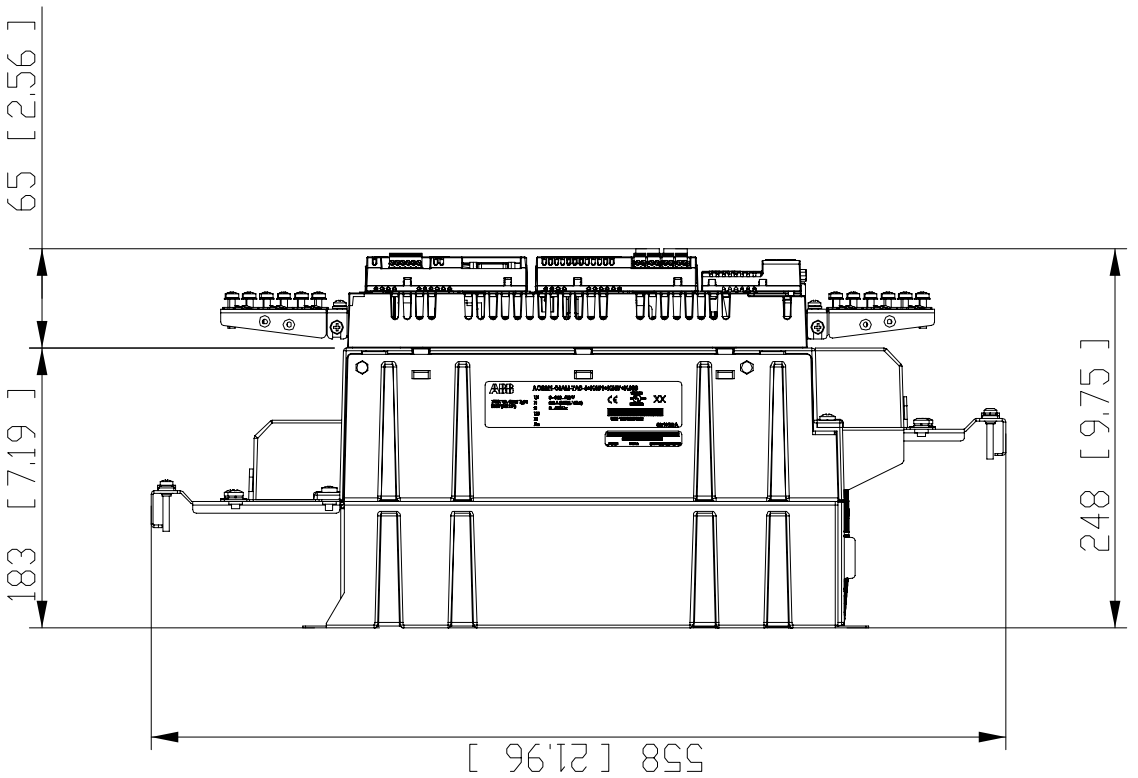
65 [2.56]
183 [7.19]
248 [9.75]
558 [21.96]

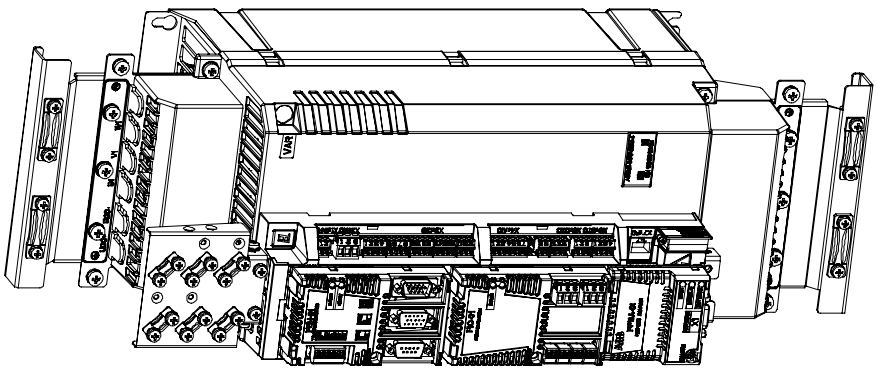

Frame size D

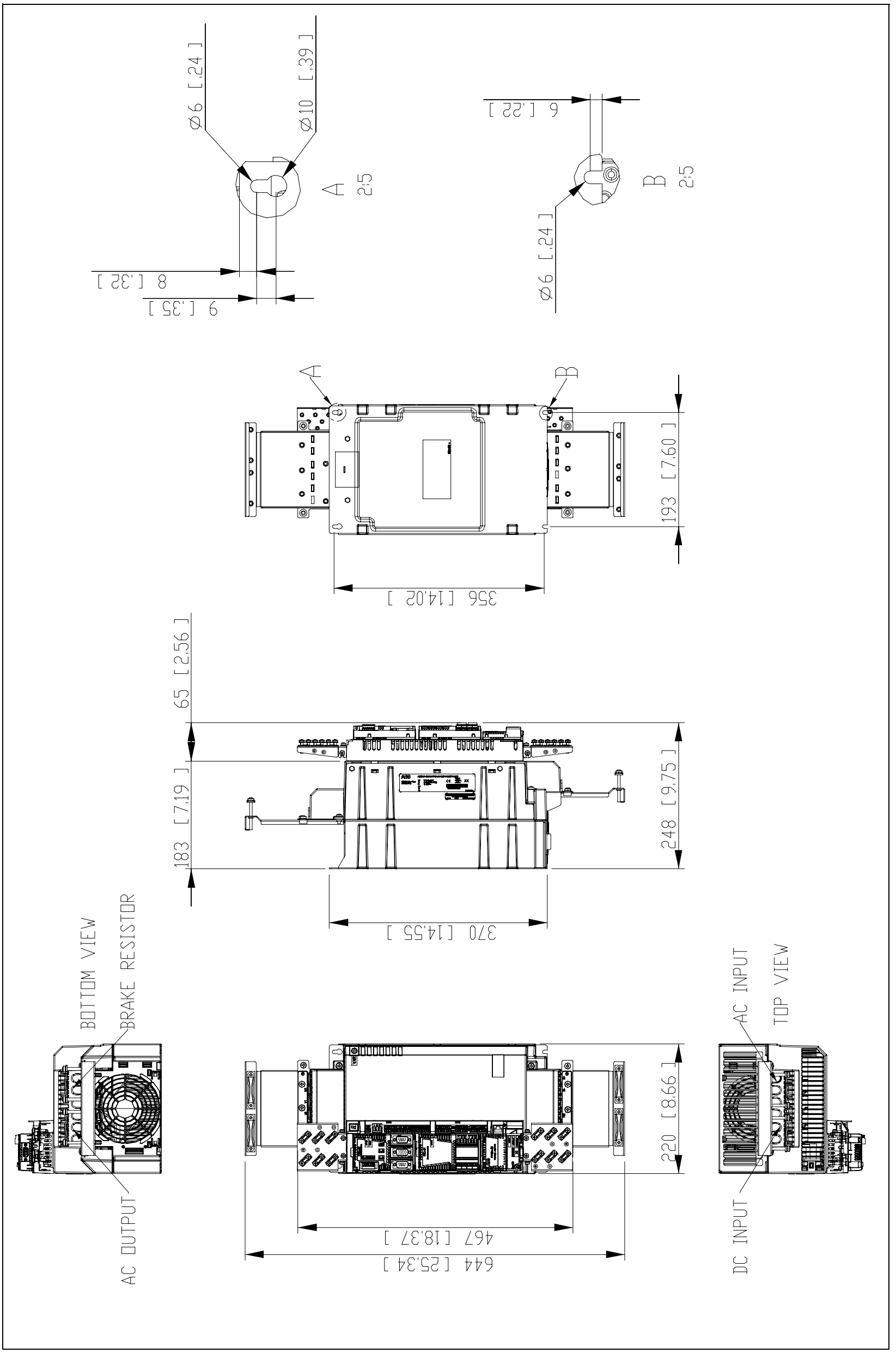
Ø6 [.24]
Ø10 [.39]
A 2:5
8 [.32]
9 [.35]
6 [.22]
Ø6 [.24]
B 2:5
A
B
193 [7.60]
356 [14.02]
65 [2.56]
183 [7.19]
248 [9.75]
370 [14.55]
BOTTOM VIEW
BRAKE RESISTOR
AC OUTPUT
220 [8.66]
467 [18.37]
644 [25.34]
AC INPUT
TOP VIEW
DC INPUT

Mains chokes – CHK-0x

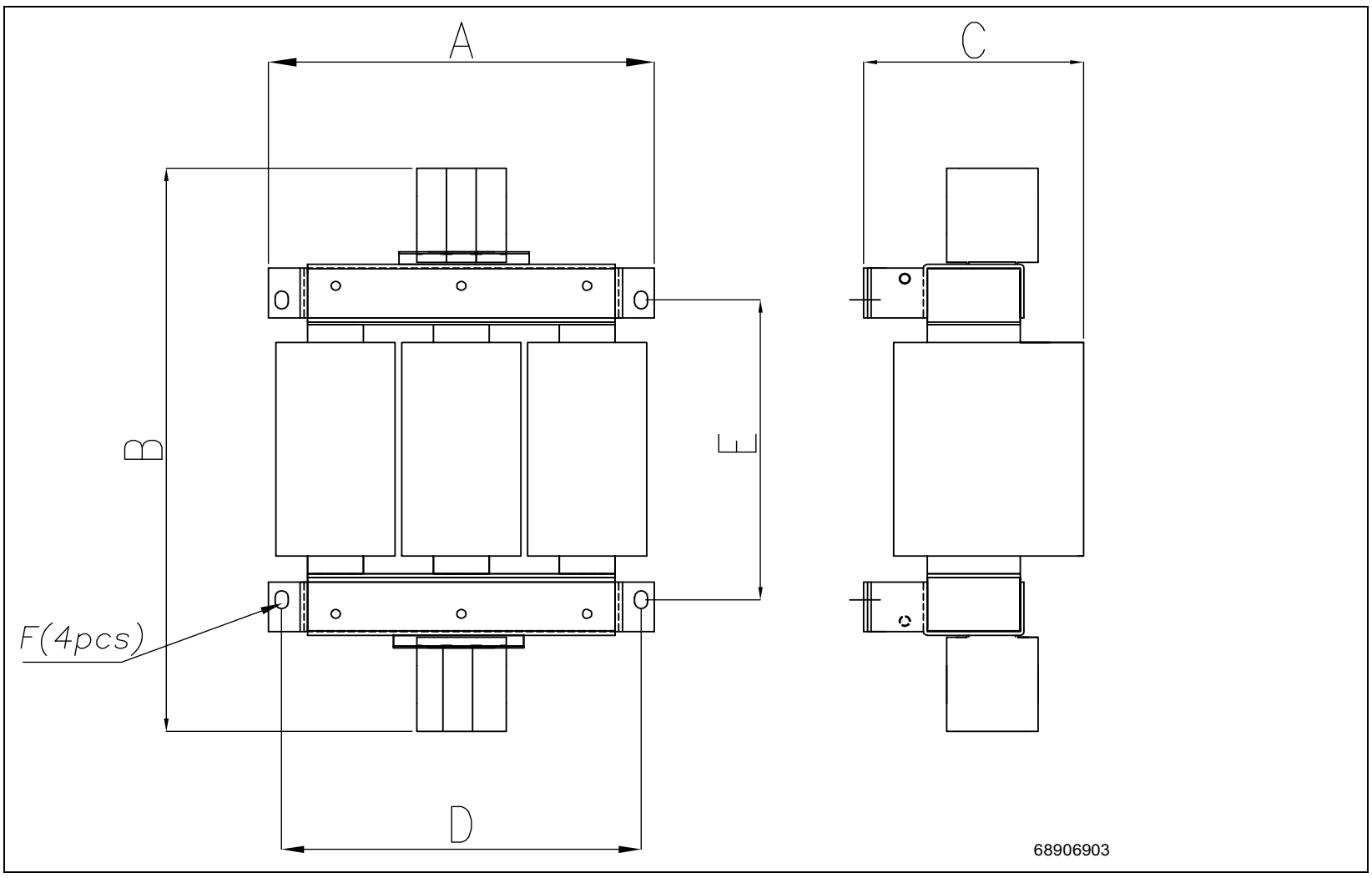

Mains choke – CHK-xx dimensions

Parameter	Choke type					
	CHK-02	**CHK-03**	**CHK-04**	**CHK-05**	**CHK-07**	**CHK-08**
dim A mm (in.)	150 (5.91)	150 (5.91)	150 (5.91)	207 (8.15)	249 (9.80)	249 (9.80)
dim B mm (in.)	175 (6.89)	175 (6.89)	175 (6.89)	272 (10.71)	326 (12.83)	346 (13.62)
dim C mm (in.)	86 (3.39)	100 (3.94)	100 (3.94)	154 (6.06)	167 (6.57)	167 (6.57)
dim D mm (in.)	105 (4.13)	105 (4.13)	105 (4.13)	193 (7.60)	235 (9.25)	235 (9.25)
dim E mm (in.)	148 (5.83)	148 (5.83)	148 (5.83)	118 (4.65)	125 (4.92)	147 (5.79)
F screw size	M5	M5	M5	M6	M6	M6
Weight kg (lbs)	3.8 (8.4)	5.4 (11.9)	5.2 (11.5)	10 (22)	14 (31)	16 (35)
Wire size – Main terminals mm^2 (AWG)	0.5 … 10 (20…6)	0.5 … 10 (20…6)	0.5 … 10 (20…6)	1.5 … 35 (16…0)	25 … 50 (6…0)	25 … 50 (6…0)
Tightening torque – Main terminals N·m (lbf·in)	1.5 (13)	1.5 (13)	1.5 (13)	3.2 (28)	6 (53)	6 (53)
PE/Chassis terminals	M5	M5	M5	M6	M6	M8
Tightening torque – PE/Chassis terminals N·m (lbf·in)	4 (35)	4 (35)	4 (35)	8 (70)	8 (70)	15 (135)

EMC filters – JFI-0x

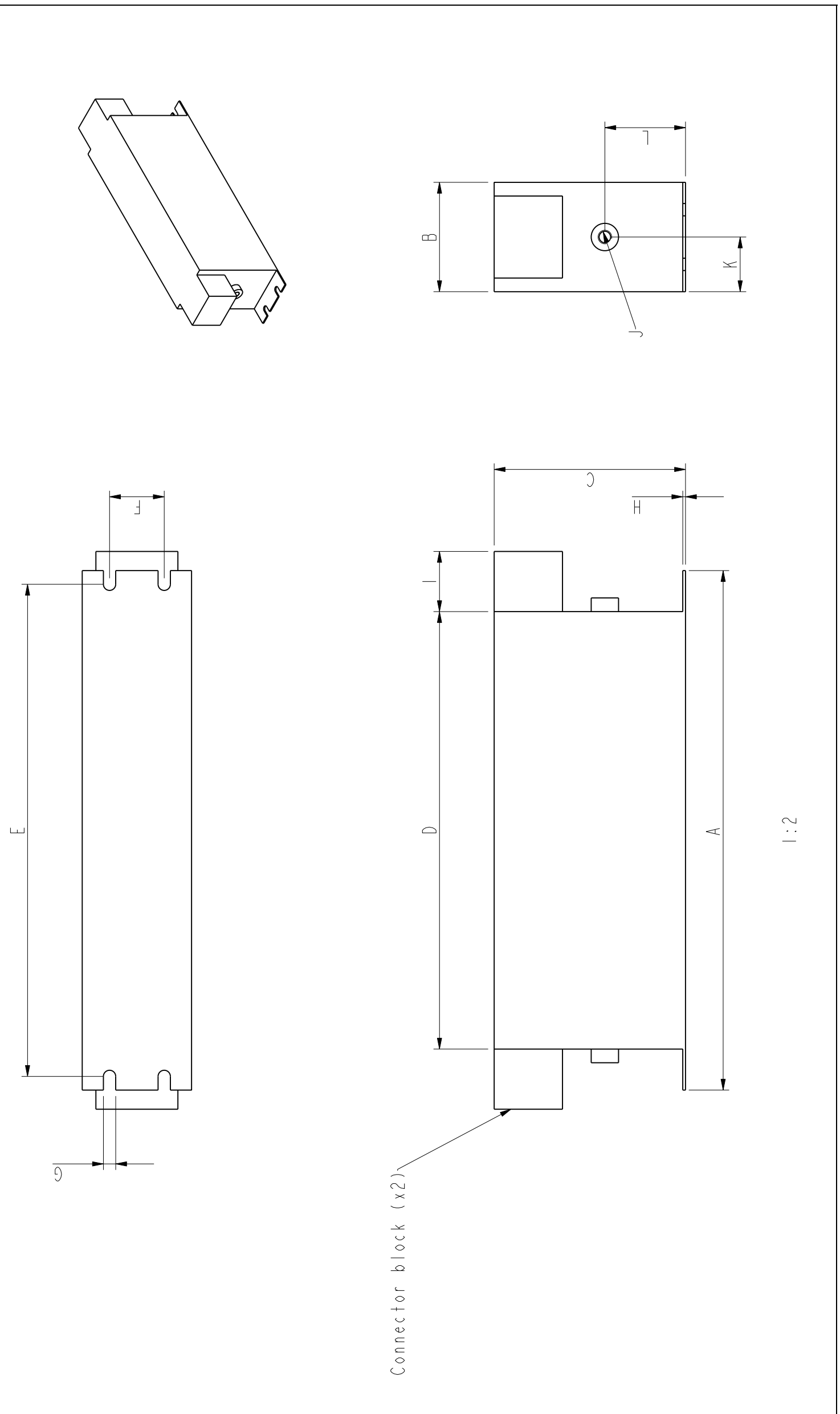

EMC filter – JFI-0x dimensions

Parameter	Filter type			
	JFI-02	**JFI-03**	**JFI-05**	**JFI-07**
Dim. A mm (in.)	250 (9.84)	250 (9.84)	250 (9.84)	270 (10.63)
Dim. B mm (in.)	45 (1.77)	50 (1.97)	85 (3.35)	90 (3.54)
Dim. C mm (in.)	70 (2.76)	85 (3.35)	90 (3.54)	150 (5.91)
Dim. D mm (in.)	220 (8.66)	240 (9.45)	220 (8.66)	240 (9.45)
Dim. E mm (in.)	235 (9.25)	255 (10.04)	235 (9.25)	255 (10.04)
Dim. F mm (in.)	25 (0.98)	30 (1.18)	60 (2.36)	65 (2.56)
Dim. G mm (in.)	5.4 (0.21)	5.4 (0.21)	5.4 (0.21)	6.5 (0.26)
Dim. H mm (in.)	1 (0.04)	1 (0.04)	1 (0.04)	1.5 (0.06)
Dim. I mm (in.)	22 (0.87)	25 (0.98)	39 (1.54)	45 (1.77)
Dim. J	M5	M5	M6	M10
Dim. K mm (in.)	22.5 (0.89)	25 (0.98)	42.5 (1.67)	45 (1.77)
Dim. L mm (in.)	29.5 (1.16)	39.5 (1.56)	26.5 (1.04)	64 (2.52)
Weight kg (lbs)	0.8 (1.75)	1.1 (2.4)	1.8 (4.0)	3.9 (8.5)
Wire size (solid) mm^2 (AWG)	0.2 … 10 (AWG24…8)	0.5 … 16 (AWG20…6)	6…35 (AWG8…2)	16…50 (AWG4…1/0)
Wire size (stranded) mm^2 (AWG)	0.2 … 6 (AWG24…10)	0.5 … 10 (AWG20…8)	10…25 (AWG6…4)	16…50 (AWG4…1/0)
Tightening torque of terminals N·m (lbf·in)	1.5 … 1.8 (13.3 … 15.9)	1.5 … 1.8 (13.3 … 15.9)	4.0 … 4.5 (35 … 40)	7…8 (60…70)

Brake resistors – JBR-xx

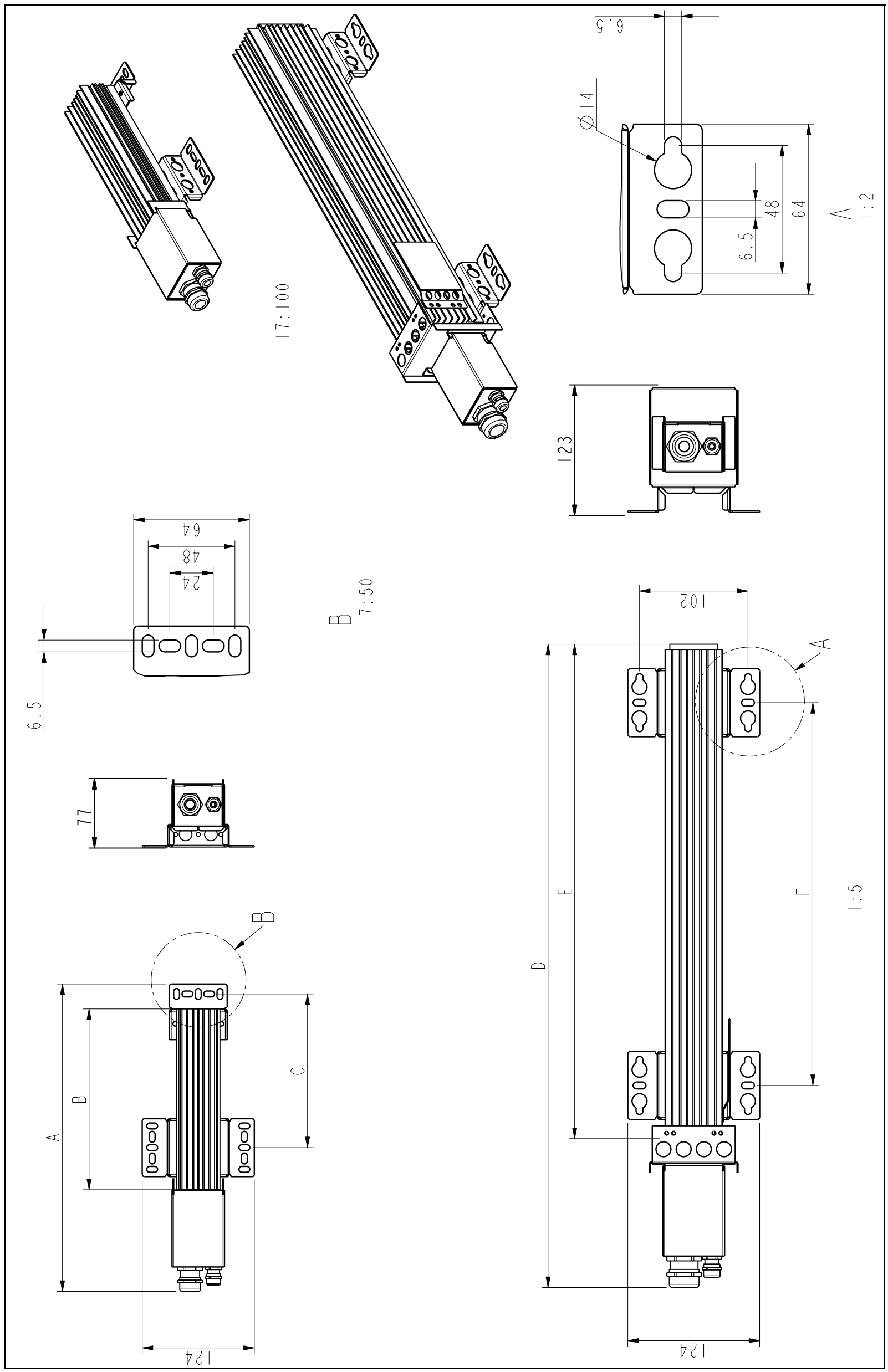

Brake resistors – JBR-xx dimensions

Parameter	Resistor type				
	JBR-01	**JBR-03**	**JBR-04**	**JBR-05**	**JBR-06**
Dim. A mm (in.)	295 (11.61)	340 (13.39)	–	–	–
Dim. B mm (in.)	155 (6.10)	200 (7.87)	–	–	–
Dim. C mm (in.)	125 (4.92)	170 (6.69)	–	–	–
Dim. D mm (in.)	–	–	345 (13.58)	465 (18.31)	595 (23.43)
Dim. E mm (in.)	–	–	210 (8.27)	330 (12.99)	460 (18.11)
Dim. F mm (in.)	–	–	110 (4.33)	230 (9.06)	360 (14.17)
Weight kg (lbs)	0.75 (1.7)	0.8 (1.8)	1.8 (4.0)	3.0 (6.6)	3.9 (8.6)
Max. wire size – Main terminals	10 mm^2 (AWG6)				
Tightening torque – Main terminals	1.5 … 1.8 N·m (13 … 16 lbf·in)				
Max. wire size – Thermal switch terminals	4 mm^2 (AWG12)				
Tightening torque – Thermal switch terminals	0.6 … 0.8 N·m (5.3 … 7.1 lbf·in)				

Further information

Product and service inquiries

Address any inquiries about the product to your local ABB representative, quoting the type designation and serial number of the unit in question. A listing of ABB sales, support and service contacts can be found by navigating to www.abb.com/searchchannels.

Product training

For information on ABB product training, navigate to new.abb.com/service/training.

Providing feedback on ABB manuals

Your comments on our manuals are welcome. Navigate to new.abb.com/drives/manuals-feedback-form.

Document library on the Internet

You can find manuals and other product documents in PDF format on the Internet at www.abb.com/drives/documents.

Contact us

www.abb.com/drives
www.abb.com/drivespartners

3AXD50000036355 Rev B (EN) EFFECTIVE: 2016-11-21

Power and productivity
for a better world™