ABB INDUSTRIAL DRIVES

ACS880-11 drives

Hardware manual

ACS880-11 drives

Hardware manual

Table of contents

1. Safety instructions

4. Mechanical installation

6. Electrical installation – IEC

7. Electrical installation – North America (NEC)

10. Start-up

3AXD50000045932 Rev H
EN
Original instructions
EFFECTIVE: 2022-10-14

Table of contents

1 Safety instructions

Contents of this chapter 15
Use of warnings and notes 15
General safety in installation, start-up and maintenance 16
Electrical safety in installation, start-up and maintenance 18
Electrical safety precautions 18
Additional instructions and notes 19
Printed circuit boards 19
Grounding 20
General safety in operation 21
Additional instructions for permanent magnet motor drives 21
Safety in installation, start-up, maintenance 21
Safety in operation 22

2 Introduction to the manual

Contents of this chapter 23
Target audience 23
Categorization by frame size and option code 23
Quick installation, commissioning and operation flowchart 24
Terms and abbreviations 25
Related documents 26

3 Operation principle and hardware description

Contents of this chapter 27
Operation principle 28
DC voltage boost function 30
Benefits of the DC voltage boost 30
Impact of DC voltage boost on input current 30
DC connection 30
Layout 31
Overview of power and control connections 33
Control panel 34
Control panel door mounting kits 35
Control panel mounting platform cover 35
Control of several drives 35
Type designation label 36
Type designation key 36
Basic code 37

Option codes 37

4 Mechanical installation

Contents of this chapter 41
Cabinet installation (options +P940 and +P944) 41
Vibration dampers (option +C131) 41
Flange mounting (option +C135) 41
Safety 42
Examining the installation site 42
Installation positions 43
Free space requirements 44
Necessary tools 45
Moving the drive 46
Unpacking and examining delivery 46
Installing the drive vertically 52
Installing the drive vertically side by side 54
Installing the drive horizontally 54

5 Guidelines for planning the electrical installation

Contents of this chapter 55
Limitation of liability 55
Selecting the main supply disconnecting device 55
European Union and United Kingdom 56
North America 56
Other regions 56
Implementing a fast switch over between the power line and generator 56
Selecting the main contactor 56
North America 57
Other regions 57
Examining the compatibility of the motor and drive 57
Protecting the motor insulation and bearings 57
Requirements tables 58
Requirements for ABB motors, P_n < 100 kW (134 hp) 58
Requirements for ABB motors, $P_n \geq$ 100 kW (134 hp) 59
Requirements for non-ABB motors, P_n < 100 kW (134 hp) 60
Requirements for non-ABB motors, $P_n \geq$ 100 kW (134 hp) 61
Abbreviations 62
Availability of d*u*/d*t* filter and common mode filter by drive type 62
Additional requirements for explosion-safe (EX) motors 62
Additional requirements for ABB motors of types other than M2_, M3_, M4_, HX_ and AM_ 62
Additional requirements for the regenerative and low harmonics drives 62

Additional requirements for ABB high-output and IP23 motors .. 62
Additional requirements for non-ABB high-output and IP23 motors 63
Additional data for calculating the rise time and the peak line-to-line voltage 64
Additional note for sine filters 66
Selecting drives for synchronous reluctance motors (SynRM motors) 66
Selecting the power cables 66
General guidelines 66
Typical power cable sizes 66
Power cable types 67
Preferred power cable types 67
Alternate power cable types 68
Not allowed power cable types 69
Additional guidelines – North America 69
Metal conduit 70
Power cable shield 70
Grounding requirements 70
Additional grounding requirements – IEC 71
Additional grounding requirements – UL (NEC) 72
Selecting the control cables 72
Shielding 72
Signals in separate cables 73
Signals that can be run in the same cable 73
Relay cable 73
Control panel to drive cable 73
PC tool cable 73
Routing the cables 73
General guidelines – IEC 73
General guidelines – North America 74
Continuous motor cable shield/conduit or enclosure for equipment on the motor cable 75
Separate control cable ducts 76
Protecting the drive, input power cable, motor and motor cable in short circuit situations and against thermal overload 76
Protecting the drive and the input power cable in short-circuits 76
Circuit breakers 77
Protecting the motor and motor cable in short-circuits 77
Protecting the motor cables against thermal overload 77
Protecting the motor against thermal overload 78
Protecting the motor against overload without thermal model or temperature sensors 78
Implementing a motor temperature sensor connection 78
Connecting a motor temperature sensor to the drive through an option module 79

Protecting the drive against ground faults ... 81
Residual current device compatibility ... 81
Implementing the emergency stop function ... 81
Implementing the Safe torque off function ... 81
Implementing the power loss ride-through function ... 81
Implementing the functions provided by the FSO safety functions module . 82
Using power factor compensation capacitors with the drive ... 82
Using a safety switch between the drive and the motor ... 83
Implementing an ATEX-certified motor thermal protection ... 83
Controlling a contactor between drive and motor ... 84
Implementing a bypass connection ... 84
Protecting the contacts of relay outputs ... 85

6 Electrical installation – IEC

Contents of this chapter ... 87
Safety ... 87
Required tools ... 87
Grounding the motor cable shield at the motor end ... 87
Measuring the insulation ... 88
Measuring the insulation resistance of the drive ... 88
Measuring the insulation resistance of the input power cable ... 88
Measuring the insulation resistance of the motor and motor cable ... 88
Grounding system compatibility check ... 89
Connecting the power cables ... 90
Connection diagram ... 90
Connection procedure ... 91
R8 power cable connection if you detach the cable connectors .. 98
Connecting the control cables ... 99
Connection diagram ... 99
Connection procedure ... 99
Installing option modules ... 103
Mechanical installation of option modules ... 103
Wiring option modules ... 104
Installation of safety functions modules ... 104
Installation procedure into Slot 2 ... 104
Installation next to the control unit on frames R6 and R8 ... 105
Reinstalling cover(s) ... 107
Connecting a PC ... 108
Panel bus (Control of several units from one control panel) ... 108

7 Electrical installation – North America (NEC)

Contents of this chapter ... 111
Safety ... 111
Required tools ... 111

Required tools ... 111
Measuring the insulation ... 112
Grounding system compatibility check ... 112
Connecting the power cables ... 112
Connection diagram ... 112
Connection procedure ... 113
Connecting the control cables ... 121
Connection diagram ... 121
Connection procedure ... 121
Installing option modules ... 124
Reinstalling cover(s) ... 124
Connecting a PC ... 125
Controlling several drives through the panel bus ... 125

8 Control units of the drive

Contents of this chapter ... 127
ZCU-12 layout ... 128
Default I/O diagram of the drive control unit (ZCU-1x) ... 129
Additional information on the connections ... 131
External power supply for the control unit (XPOW) ... 131
DI6 as a PTC sensor input ... 131
AI1 or AI2 as a Pt100, Pt1000, PTC or KTY84 sensor input ... 131
DIIL input ... 132
The XD2D connector ... 132
Safe torque off (XSTO) ... 133
FSO safety functions module connection (X12) ... 133
Connector data ... 134
ZCU-1x ground isolation diagram ... 137

9 Installation checklist

Contents of this chapter ... 139
Checklist ... 139

10 Start-up

Contents of this chapter ... 141
Reforming the capacitors ... 141
Start-up procedure ... 141

11 Maintenance

Contents of this chapter ... 143
Maintenance intervals ... 143
Description of symbols ... 143

Recommended maintenance intervals after start-up 143
Cleaning the exterior of the drive 145
Cleaning the heatsink 145
Fans 146
Replacing the main cooling fan, frame R3 147
Replacing the main cooling fan, frame R6 148
Replacing the main cooling fan, frame R8 149
Replacing the auxiliary cooling fan of frame R3, IP55 (UL Type 12) and +C135 IP21 (UL Type 1) 150
Replacing the auxiliary cooling fan, frame R6 151
Replacing the second auxiliary cooling fan, IP55 (UL Type 12) frame R6 152
Replacing the internal auxiliary cooling fan, frame R8 153
Replacing the second internal auxiliary cooling fan, IP55 (UL Type 12) frame R8 154
Replacing the auxiliary cooling fan in the IP55 (UL Type 12) cover, frame R8 155
Replacing the drive 157
Capacitors 157
Reforming the capacitors 157
Control panel 157
Drive LEDs 157
Control unit 158
Replacing the memory unit of ZCU-12 158
Replacing the ZCU-12 control unit battery 159
Replacing safety functions modules (FSO-12, option +Q973 and FSO-21, option +Q972) 160
Functional safety components 161

12 Technical data

Contents of this chapter 163
Marine type-approved drives (option +C132) 163
Electrical ratings 163
Deratings 166
Surrounding air temperature derating 166
Altitude derating 167
Deratings for special settings in the drive control program 168
Derating for output voltage boost 173
Fuses (IEC) 174
aR fuses DIN 43653 stud-mount 174
aR fuses DIN 43620 blade style 175
gG fuses DIN 43620 blade style 176
Quick guide for selecting between gG and aR fuses 177
Calculating the short-circuit current of the installation 177
Calculation example 178

Fuses (UL) ... 178
Circuit breakers (IEC) ... 180
ABB miniature and molded case circuit breakers ... 180
Circuit breakers (UL) ... 181
ABB inverse time circuit breakers ... 181
Dimensions, weights and free space requirements ... 184
Free space requirements ... 184
Package dimensions and weights ... 185
Losses, cooling data and noise ... 187
IEC ... 187
UL (NEC) ... 188
Cooling air flow and heat dissipation for flange mounting (option +C135) ... 188
Terminal and entry data for the power cables ... 189
Terminal and entry data for the control cables ... 190
IEC ... 190
North America ... 191
Power cables ... 191
Electrical power network specification ... 193
Motor connection data ... 195
Control unit (ZCU-12) control unit connection data ... 195
Efficiency ... 196
Energy efficiency (ecodesign) ... 196
Protection classes for module ... 196
Colors ... 196
Materials ... 196
Drive ... 196
Package materials for small wall-mounted drives and converter modules ... 196
Package materials for large wall-mounted drives and converter modules ... 197
Package materials for options, accessories and spare parts ... 197
Materials of manuals ... 197
Disposal ... 197
Applicable standards ... 198
Ambient conditions ... 198
Markings ... 200
Compliance with the EN 61800-3:2004 + A1:2012 ... 201
Definitions ... 201
Category C2 ... 201
Category C3 ... 202
Category C4 ... 203
UL checklist ... 204
Declarations of conformity ... 205
Marine approvals ... 205

Design lifetime expectancy 205
Disclaimers 205
Generic disclaimer 205
Cybersecurity disclaimer 205

13 Dimension drawings

Contents of this chapter 207
R3, IP21 (UL Type 1) 208
R3 – Option +B056 (IP55, UL Type 12) 209
R6, IP21 (UL Type 1) 210
R6 – Option +B056 (IP55, UL Type 12) 211
R8, IP21 (UL Type 1) 212
R8 – Option +B056 (IP55, UL Type 12) 213

14 The Safe torque off function

Contents of this chapter 215
Description 215
Compliance with the European Machinery Directive and the UK Supply of Machinery (Safety) Regulations 216
Wiring 217
Activation switch 217
Cable types and lengths 217
Grounding of protective shields 217
Single drive (internal power supply) 218
Multiple drives 219
Internal power supply 219
External power supply 220
Operation principle 221
Start-up including validation test 222
Competence 222
Validation test reports 222
Validation test procedure 222
Use 224
Maintenance 226
Competence 227
Perfect proof test procedure 227
Simplified proof test procedure 227
Fault tracing 229
Safety data 230
Terms and abbreviations 232
TÜV certificate 233
Declarations of conformity 234

15 Common mode, du/dt and sine filters

Contents of this chapter 237
Common mode filters 237
d*u*/d*t* filters 237
When is a d*u*/d*t* filter needed? 237
d*u*/d*t* filter types 238
Description, installation and technical data of the filters 238
Sine filters 238
Selecting a sine filter for the drive 238
Definitions 239
Derating 239
Description, installation and technical data 240

Further information

1

Safety instructions

Contents of this chapter

This chapter contains the safety instructions which you must obey when you install, start-up, operate and do maintenance work on the drive. If you ignore the safety instructions, injury, death or damage can occur.

Use of warnings and notes

Warnings tell you about conditions which can cause injury or death, or damage to the equipment. They also tell you how to prevent the danger. Notes draw attention to a particular condition or fact, or give information on a subject.

The manual uses these warning symbols:

WARNING!
Electricity warning tells about hazards from electricity which can cause injury or death, or damage to the equipment.

WARNING!
General warning tells about conditions other than those caused by electricity, which can cause injury or death, or damage to the equipment.

WARNING!
Electrostatic sensitive devices warning tells you about the risk of electrostatic discharge which can cause damage to the equipment.

General safety in installation, start-up and maintenance

These instructions are for all personnel who do work on the drive.

WARNING!
Obey these instructions. If you ignore them, injury or death, or damage to the equipment can occur.

- Keep the drive in its package until you install it. After unpacking, protect the drive from dust, debris and moisture.
- Use the required personal protective equipment: safety shoes with metal toe cap, safety glasses, protective gloves and long sleeves, etc. Some parts have sharp edges.
- Lift a heavy drive with a lifting device. Use the designated lifting points. See the dimension drawings.
- Be careful when handling a tall module. The module overturns easily because it is heavy and has a high center of gravity. Whenever possible, secure the module with chains. Do not leave an unsupported module unattended especially on a sloping floor.

- Beware of hot surfaces. Some parts, such as heatsinks of power semiconductors, and brake resistors, remain hot for a while after disconnection of the electrical supply.
- Vacuum clean the area around the drive before the start-up to prevent the drive cooling fan from drawing dust inside the drive.
- Make sure that debris from drilling, cutting and grinding does not go into the drive during installation. Electrically conductive debris inside the drive can cause damage or malfunction.
- Make sure that there is sufficient cooling. See the technical data.
- Before you connect voltage to the drive, make sure that all covers are in place. Do not remove the covers when voltage is connected.

- Before you adjust the drive operation limits, make sure that the motor and all driven equipment can operate throughout the set operation limits.
- Before you activate the automatic fault reset or automatic restart functions of the drive control program, make sure that no dangerous situations can occur. These functions reset the drive automatically and continue operation after a fault or supply break. If these functions are activated, the installation must be clearly marked as defined in IEC/EN/UL 61800-5-1, subclause 6.5.3, for example, "THIS MACHINE STARTS AUTOMATICALLY".
- The maximum number of drive power-ups is five in ten minutes. Too frequent power-ups can damage the charging circuit of the DC capacitors.
- If you have connected safety circuits to the drive (for example, Safe torque off or emergency stop), validate them at start-up. See separate instructions for the safety circuits.
- Beware of hot air exiting from the air outlets.
- Do not cover the air inlet or outlet when the drive is running.

Note:

- If you select an external source for the start command and it is on, the drive will start immediately after fault reset unless you configure the drive for pulse start. See the firmware manual.
- If the drive is in remote control mode, you cannot stop or start the drive with the control panel.
- Only authorized persons are allowed to repair a malfunctioning drive.

Electrical safety in installation, start-up and maintenance

Electrical safety precautions

These electrical safety precautions are for all personnel who do work on the drive, motor cable or motor.

WARNING!
Obey these instructions. If you ignore them, injury or death, or damage to the equipment can occur.

If you are not a qualified electrical professional, do not do installation or maintenance work.

Do these steps before you begin any installation or maintenance work.

1. Clearly identify the work location and equipment.
2. Disconnect all possible voltage sources. Make sure that re-connection is not possible. Lock out and tag out.
   - Open the main disconnecting device of the drive.
   - If you have a permanent magnet motor connected to the drive, disconnect the motor from the drive with a safety switch or by other means.
   - Disconnect all dangerous external voltages from the control circuits.
   - After you disconnect power from the drive, always wait 5 minutes to let the intermediate circuit capacitors discharge before you continue.
3. Protect any other energized parts in the work location against contact.
4. Take special precautions when close to bare conductors.
5. Measure that the installation is de-energized. Use a quality voltage tester.
   - Before and after measuring the installation, verify the operation of the voltage tester on a known voltage source.
   - Make sure that the voltage between the drive input power terminals (L1, L2, L3) and the grounding (PE) busbar is zero.
   - Make sure that the voltage between the drive output terminals (T1/U, T2/V, T3/W) and the grounding (PE) busbar is zero.

     Important! Repeat the measurement also with the DC voltage setting of the tester. Measure between each phase and ground. There is a risk of dangerous DC voltage charging due to leakage capacitances of the motor circuit. This voltage can remain charged for a long time after the drive power-off. The measurement discharges the voltage.
   - Make sure that the voltage between the drive DC terminals (UDC+ and UDC-) and the grounding (PE) terminal is zero.

     Note: If cables are not connected to the drive DC terminals, measuring the voltage from the DC terminal screws can give incorrect results.

6. Install temporary grounding as required by the local regulations.
7. Ask for a permit to work from the person in control of the electrical installation work.

Additional instructions and notes

WARNING!
Obey these instructions. If you ignore them, injury or death, or damage to the equipment can occur.

If you are not a qualified electrical professional, do not do installation or maintenance work.

- Make sure that the electrical power network, motor/generator, and environmental conditions agree with the drive data.
- Do not do insulation or voltage withstand tests on the drive.
- If you have a cardiac pacemaker or other electronic medical device, keep away from the area near motor, drive, and the drive power cabling when the drive is in operation. There are electromagnetic fields present which can interfere with the function of such devices. This can cause a health hazard.

Note:

- When the drive is connected to the input power, the motor cable terminals and the DC bus are at a dangerous voltage.
  After disconnecting the drive from the input power, these remain at a dangerous voltage until the intermediate circuit capacitors have discharged.
- External wiring can supply dangerous voltages to the relay outputs of the control units of the drive.
- The Safe torque off function does not remove the voltage from the main and auxiliary circuits. The function is not effective against deliberate sabotage or misuse.

Printed circuit boards

WARNING!
Use a grounding wristband when you handle printed circuit boards. Do not touch the boards unnecessarily. The boards contain components sensitive to electrostatic discharge.

Grounding

These instructions are for all personnel who are responsible for the grounding of the drive.

WARNING!
Obey these instructions. If you ignore them, injury or death, or equipment malfunction can occur, and electromagnetic interference can increase.

If you are not a qualified electrical professional, do not do grounding work.

- Always ground the drive, the motor and adjoining equipment. This is necessary for the personnel safety.
- Make sure that the conductivity of the protective earth (PE) conductors is sufficient and that other requirements are met. See the electrical planning instructions of the drive. Obey the applicable national and local regulations.
- When using shielded cables, make a 360° grounding of the cable shields at the cable entries to reduce electromagnetic emission and interference.
- In a multiple-drive installation, connect each drive separately to the protective earth (PE) busbar of the power supply.

General safety in operation

These instructions are for all personnel that operate the drive.

WARNING!
Obey these instructions. If you ignore them, injury or death, or damage to the equipment can occur.

- If you have a cardiac pacemaker or other electronic medical device, keep away from the area near motor, drive, and the drive power cabling when the drive is in operation. There are electromagnetic fields present which can interfere with the function of such devices. This can cause a health hazard.
- Give a stop command to the drive before you reset a fault. If you have an external source for the start command and the start is on, the drive will start immediately after the fault reset, unless you configure the drive for pulse start. See the firmware manual.
- Before you activate the automatic fault reset or automatic restart functions of the drive control program, make sure that no dangerous situations can occur. These functions reset the drive automatically and continue operation after a fault or supply break. If these functions are activated, the installation must be clearly marked as defined in IEC/EN/UL 61800-5-1, subclause 6.5.3, for example, "THIS MACHINE STARTS AUTOMATICALLY".

Note:

- The maximum number of drive power-ups is five in ten minutes. Too frequent power-ups can damage the charging circuit of the DC capacitors. If you need to start or stop the drive, use the control panel keys or commands through the I/O terminals of the drive.
- If the drive is in remote control mode, you cannot stop or start the drive with the control panel.

Additional instructions for permanent magnet motor drives

Safety in installation, start-up, maintenance

These are additional warnings concerning permanent magnet motor drives. The other safety instructions in this chapter are also valid.

WARNING!
Obey these instructions. If you ignore them, injury or death, or damage to the equipment can occur.

If you are not a qualified electrical professional, do not do installation or maintenance work.

- Do not do work on the drive when a rotating permanent magnet motor is connected to it. A rotating permanent magnet motor energizes the drive including its input and output power terminals.

Before installation, start-up and maintenance work on the drive:

- Stop the drive.
- Disconnect the motor from the drive with a safety switch or by other means.
- If you cannot disconnect the motor, make sure that the motor cannot rotate during work. Make sure that no other system, like hydraulic crawling drives, can rotate the motor directly or through any mechanical connection like belt, nip, rope, etc.
- Do the steps in section Electrical safety precautions (page 18).
- Install temporary grounding to the drive output terminals (T1/U, T2/V, T3/W). Connect the output terminals together as well as to the PE.

During the start-up:

- Make sure that the motor cannot run overspeed, for example, driven by the load. Motor overspeed causes overvoltage that can damage or destroy the capacitors in the intermediate circuit of the drive.

Safety in operation

WARNING!
Make sure that the motor cannot run overspeed, for example, driven by the load. Motor overspeed causes overvoltage that can damage or destroy the capacitors in the intermediate circuit of the drive.

2

Introduction to the manual

Contents of this chapter

This chapter describes the intended audience and contents of the manual. It contains a flowchart of steps in examining the delivery, installing and commissioning the drive. The flowchart refers to chapters/sections in this manual and other manuals.

Target audience

This manual is intended for people who plan the installation, install, commission and do maintenance work on the drive, or create instructions for the end user of the drive concerning the installation and maintenance of the drive.

Read the manual before you work on the drive. You are expected to know the fundamentals of electricity, wiring, electrical components and electrical schematic symbols.

Categorization by frame size and option code

The frame size identifies information which concerns only a certain frame size of the drive. The frame size is shown on the type designation label. All frame sizes are listed in the technical data.

The option code (A123) identifies information which concerns only a certain optional selection. The options included in the drive are listed on the type designation label.

Quick installation, commissioning and operation flowchart

Task	See
Identify the frame of your drive: R3, R6 or R8.	Type designation label (page 36)
Plan the electrical installation and acquire the accessories needed (cables, fuses, etc.). Check the ratings, required cooling air flow, input power connection, compatibility of the motor, motor connection, and other technical data.	Guidelines for planning the electrical installation (page 55) Technical data (page 163)
Unpack and examine the drive.	Mechanical installation (page 41)
The standard drive can be installed to a symmetrically grounded TN-S system. If you install the drive to another system, you may need to disconnect the EMC filter and ground-to-phase varistor.	Grounding system compatibility check (page 89)
Install the drive on a wall.	Mechanical installation (page 41)
Route the cables.	Routing the cables (page 73)
Measure the insulation of the input cable and the motor and the motor cable.	Electrical installation – IEC (page 87) or Electrical installation – North America (NEC) (page 111)
Connect the power cables.	Electrical installation – IEC (page 87) or Electrical installation – North America (NEC) (page 111)
Connect the control cables.	Electrical installation – IEC (page 87) or Electrical installation – North America (NEC) (page 111)

Task	See
Check the installation.	Installation checklist (page 139)
Commission the drive.	Firmware manual Quick start-up guide for the drive

Terms and abbreviations

Term	Description
ACS-AP-I	Industrial assistant non-Bluetooth control panel
ACS-AP-W	Industrial assistant control panel with Bluetooth interface
Control unit	The part in which the control program runs.
DC link	DC circuit between line-side converter and motor-side converter
DC link capacitors	Energy storage which stabilizes the intermediate circuit DC voltage
DPMP	Optional mounting platform for door mounting of control panel
DPMP-01	Mounting platform for control panel (flush mounting)
DPMP-02, DPMP-03	Mounting platform for control panel (surface mounting)
Drive	Frequency converter for controlling AC motors
EFB	Embedded fieldbus
EMC	Electromagnetic compatibility
FAIO-01	Analog I/O extension module
FCAN	Optional CANopen® adapter module
FCNA-01	Optional ControlNet™ adapter module
FDIO-01	Optional digital I/O extension module
FECA-01	Optional EtherCAT® adapter module
FENA-21	Optional Ethernet adapter module for EtherNet/IP™, Modbus TCP and PROFINET IO protocols, 2-port
FEPL-02	Optional Ethernet POWERLINK adapter module
FIO-01	Optional digital I/O extension module
FIO-11	Optional analog I/O extension module
FPBA-01	Optional PROFIBUS DP® adapter module
Frame, frame size	Physical size of the drive or power module
FSO-21	Safety functions module which supports the FSE-31 module and the use of safety encoders
FSO-12	Safety functions module which does not support the use of encoders
FSO-12, FSO-21	Optional functional safety modules
IGBT	Insulated gate bipolar transistor
Intermediate circuit	DC circuit between rectifier and inverter

Term	Description
Inverter	Converts direct current and voltage to alternating current and voltage.
Line-side converter	Rectifies three phase AC current to direct current for the intermediate DC link of the drive. The line-side converter can transfer energy from the electrical power system to the DC link and vice versa.
Motor-side converter	Converts intermediate DC link current to AC current for the motor
NETA-21	Remote monitoring tool
Network control	With fieldbus protocols based on the Common Industrial Protocol (CIPTM), such as DeviceNet and Ethernet/IP, denotes the control of the drive using the Net Ctrl and Net Ref objects of the ODVA AC/DC Drive Profile. For more information, see www.odva.org.
Parameter	In the drive control program, user-adjustable operation instruction to the drive, or signal measured or calculated by the drive. In some (for example fieldbus) contexts, a value that can be accessed as an object. For example, variable, constant, or signal.
PLC	Programmable logic controller
PTC	Positive temperature coefficient
Rectifier	Converts alternating current and voltage to direct current and voltage
STO	Safe torque off (IEC/EN 61800-5-2)
ZCU	Type of control unit

Related documents

You can find manuals and other product documents in PDF format on the Internet at www.abb.com/drives/documents.

The code and link below open an online listing of the manuals applicable to this product.

ACS880-11 manuals

3

Operation principle and hardware description

Contents of this chapter

This chapter briefly describes the operation principle and construction of the drive.

Operation principle

The ACS880-11 is a four-quadrant drive for controlling asynchronous AC induction motors, AC induction servomotors, permanent magnet motors and synchronous reluctance motors.

The drive includes a line-side converter and a motor-side converter. The parameters and signals for both converters are combined into one primary user program.

The figure below shows the simplified main circuit diagram of the drive.

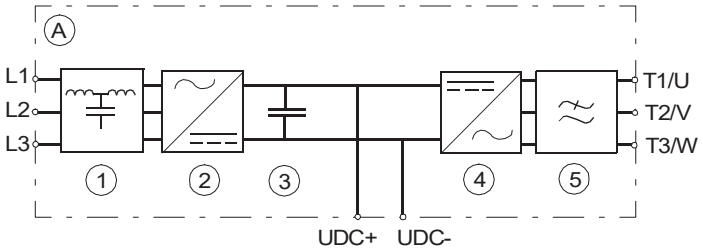

A	Drive
1	LCL filter
2	Line-side converter
3	DC link. DC circuit between the line-side converter and motor-side converter.
4	Motor-side converter
5	Common mode filter (option +E208)

The line-side converter rectifies three phase AC current to direct current for the intermediate DC link of the drive. The intermediate DC link further supplies the motor-side converter that runs the motor.

Both converters consist of six insulated gate bipolar transistors (IGBT) with free wheeling diodes. The content of AC voltage and current harmonics is low. The LCL filter suppresses the harmonics further.

The line-side converter can transfer energy from the electrical power system to the drive DC link and vice versa. Thus the drive can operate the motor in all four quadrants (speed, torque). The figure below visualizes the operation of the four-quadrant drive. In quadrants I and III, the drive operates in the motoring mode and takes energy from the power system. In quadrants II and IV, the drive operates in generating mode, and regenerates energy back to the power system.

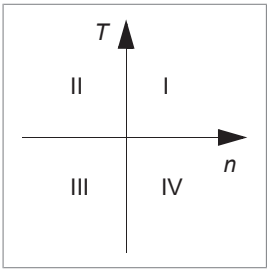

The line-side and motor-side converters have their own control programs. The parameters of both programs can be viewed and changed using a control panel.

DC voltage boost function

The drive can boost its DC link voltage. In other words, it can increase the operating voltage of the DC link from its default value.

To take the DC voltage boost function in use:

1. adjust the user DC voltage reference value (94.22) and
2. select the user-defined reference (94.22) as the source for the drive DC voltage reference (94.21).

Benefits of the DC voltage boost

- possibility to supply nominal voltage to the motor even when the supply voltage of the drive is below the motor nominal voltage level
- compensation of voltage drop due to output filter, motor cable or input supply cables
- increased motor torque in the field weakening area (ie, when the drive operates the motor in the speed range above the motor nominal speed)
- possibility to use a motor with higher nominal voltage than the actual supply voltage of the drive. Example: A drive that is connected to 415 V can supply 460 V to a 460 V motor.

Impact of DC voltage boost on input current

When the DC voltage is boosted, the drive can be drawing more input current than what is rated in the type designation label. Derating is needed:

- when the motor is running at the field weakening area or close to it and the drive is running at nominal load or close to it
- when the situation lasts long
- when the boost is more than 10%.

The rise of the input current can heat the fuses. If there are brief low line situations when the drive boosts voltage significantly, there is a risk for nuisance fuse blowing of smaller AC line fuses.

For more information, refer to ACS880-11, ACS880-31, ACS880-14, ACS880-34, ACS880-17, ACS880-37 drives product note on DC voltage boost (3AXD50000691838 [English]).

DC connection

You can connect drive frames R3 and R6 to a common DC system, see Common DC systems with ACS880-01, -04, -11, -14, -31 and -34 drives application guide (3AUA0000127818 [English]).

Layout

The layout of the drive is shown below.

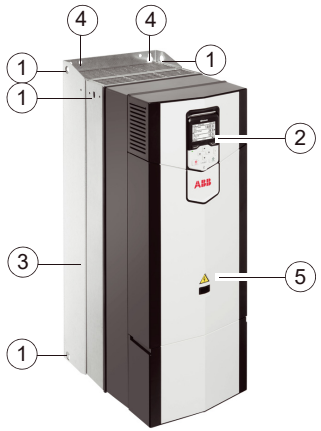

IP21 (UL Type 1) R6

IP55 (UL Type 12) option +B056, R6

UL Type 12 (R6)

IP20 (UL Open Type) option +P940 R8

1	Lifting eyes (2 pcs in frame R3, 6 pcs in frames R6 and R8)	5	Front cover
2	Control panel	6	Control panel behind the control panel cover
3	Heatsink	7	Hood in frames R6 and R8
4	Mounting points (4 pcs)		

R3		R6	
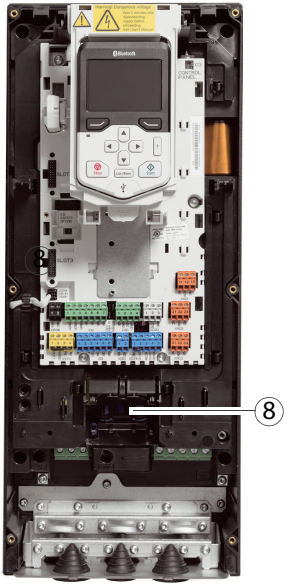		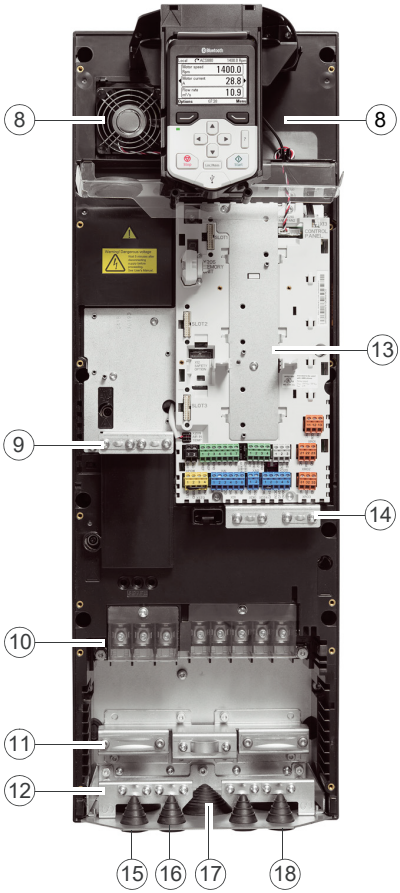	
8	Auxiliary cooling fan. For frame R3 in IP55 (UL Type 12) drives and for R3 +C135 IP21 (UL Type 1) drives. Another auxiliary cooling fan at right-hand side of the control panel is included in IP55 (UL Type 12) frames R8 and frame R6 types -061A-3 and -052A-5 and bigger.	14	Clamps for securing the control cables mechanically
9	Clamps for securing the FSO wiring mechanically	15	Input power cable entry behind the 360-degree grounding clamps
10	Power cable connection terminals behind the shroud	16	Control cable entry (4 pcs)
11	360-degree grounding clamps for power cable shields	17	DC cable entry

12	360-degree grounding clamps for control cable shields	18	Motor cable entry behind the 360-degree grounding clamps
13	Control unit with I/O cable connection terminals		

Overview of power and control connections

The logical diagram below shows the power connections and control interfaces of the drive.

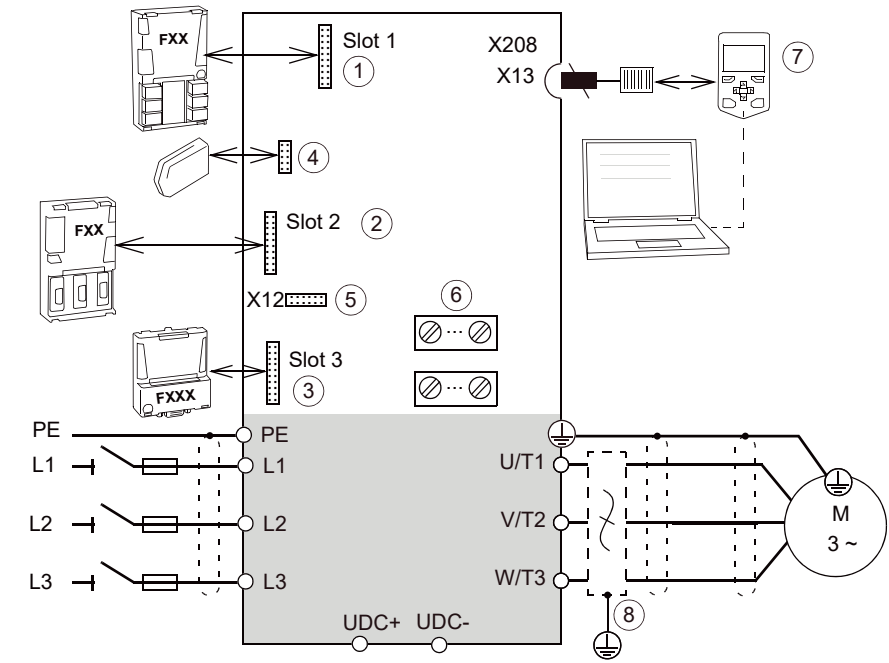

1 2 3	Analog and digital I/O extension modules, feedback interface modules and fieldbus communication modules can be inserted into slots 1, 2 and 3.
4	Memory unit
5	Connector for safety functions modules.
6	See Default I/O diagram of the drive control unit (ZCU-1x) (page 129) and Connector data (page 134).
7	Control panel
8	du/dt, common mode or sine filter (optional). See Common mode, du/dt and sine filters (page 237).

Control panel

To remove the control panel, press the retaining clip at the top (1a) and pull the panel forward from the top edge (1b).

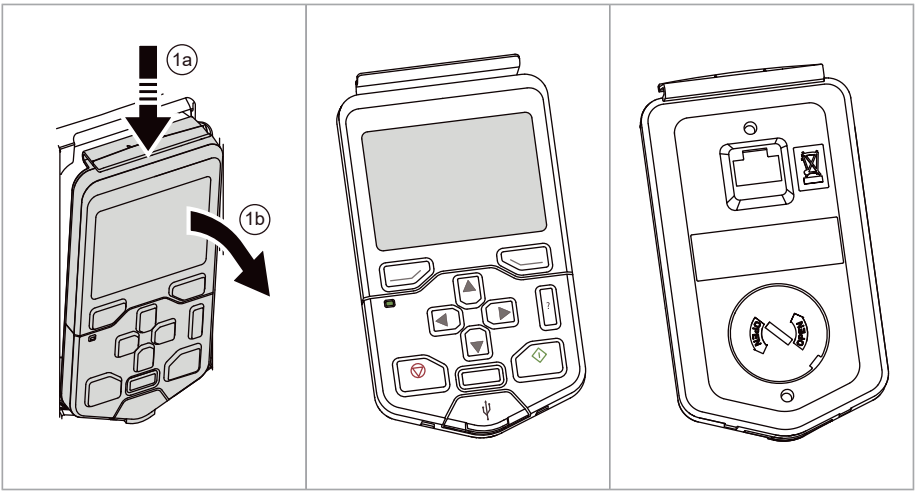

To install the control panel, put the bottom of the container in position (2a), press the retaining clip at the top (2b) and push the control panel in at the top edge (2c).

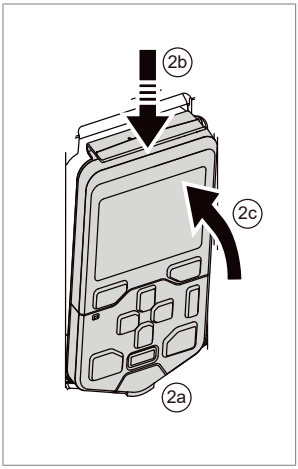

For the use of the control panel, see the firmware manual and ACS-AP-I, -S, -W and ACH-AP-H, -W Assistant control panels user's manual (3AUA0000085685 [English]).

Control panel door mounting kits

You can use a mounting platform to install the control panel on the cabinet door. Mounting platforms for control panels are available as options from ABB. For more information, see

Manual	Code (English)
DPMP-01 mounting platform for control panels installation guide	3AUA0000100140
DPMP-02/03 mounting platform for control panels installation guide	3AUA0000136205
DPMP-04 and DPMP-05 mounting platform for control panels installation guide	3AXD50000308484
DPMP-06 / 07 mounting platform for control panels installation guide	3AXD50000289561

Control panel mounting platform cover

In deliveries without control panel (option + 0J400) the control panel mounting platform is covered. The indication LEDs on the platform are visible through the protective cover.

Note: The cover is not included with options +0J400+P940.

Control of several drives

One control panel can be used to control several drives through a panel bus. See section Panel bus (Control of several units from one control panel) (page 108).

Type designation label

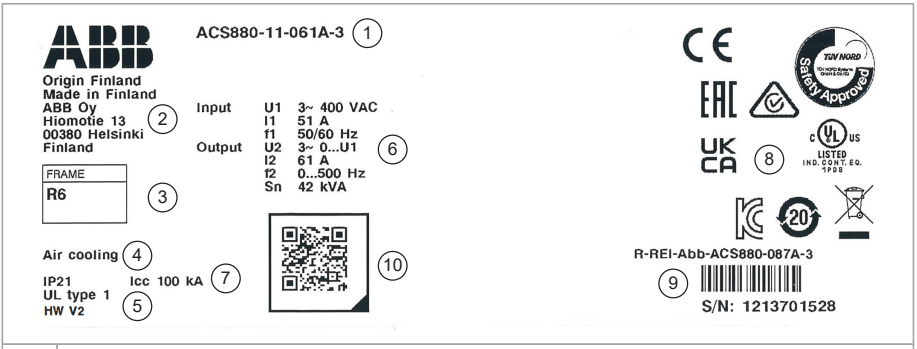

1	Type designation
2	Name and address of the manufacturer
3	Frame size (New design of frame R6 types are marked as HW v2)
4	Cooling method and additional information
5	Degree of protection
6	Nominal ratings in the supply voltage range, see the technical data.
7	Rated conditional short-circuit current, see the technical data.
8	Valid markings
9	S/N: Serial number of format MYYWWXXXX, where M: Manufacturer YY: 16, 17, 18, … for 2016, 2017, 2018, … WW: 01, 02, 03, … for week 1, week 2, week 3, … XXXXX: Integer starting every week from 0001
10	Link to product information

Type designation key

The type designation contains information on the specifications and configuration of the drive. The first digits from left express the basic drive type. The optional selections are given thereafter, separated by plus signs. The main selections are described below. Not all selections are available for all types. For more information, refer to the ordering instructions available separately on request.

Basic code

Code	Description
ACS880	Product series
Type	
11	Regenerative wall-mounted drive. When no options are selected: IP21 (UL type 1), cable entry from bottom, ACS-AP-W Assistant control panel with a bluetooth interface, no EMC filter, built-in common mode filter in frames R3 and R6, ACS880 primary control program, Safe torque-off, coated boards, multilingual quick installation and start-up guide (EN + DE, ES, FR, IT, TR).
Size	
xxxx	See section Electrical ratings (page 163) in the technical data.
Voltage range	
3	380…415 V. This is indicated in the type designation label as typical input voltage level 3 ~ 400 V AC.
5	380…500 V. This is indicated in the type designation label as typical input voltage levels 3 ~ 400/480/500 V AC.

Option codes

Code	Description
B056	IP55 (UL Type 12)
C131	Vibration dampers
C132	Marine type approval
C135	Flange mounting
C205	Marine product certification issued by DNV GL
C206	Marine product certification issued by the American Bureau of Shipping (ABS)
C207	Marine product certification issued by Lloyd's Register (LR)
C208	Marine product certification issued by Registro Italiano Navale (RINA)
C209	Marine product certification issued by Bureau Veritas
C227	Marine product certification issued by Korean Register of Shipping (KR)
E200	EMC filter for 2nd environment TN (grounded) system, category C3
E201	EMC filter for 2nd environment IT (ungrounded) system, category C3
E202	EMC filter for 1st environment TN (grounded) system, category C2

Code	Description
E208	Common mode filter Frames R3 and R6: Built-in as standard. +E208 not shown in the type designation label. Frame R8: +E208 option to be ordered. Installation by customer.
H358	Cable conduit entry (US/UK).
0J400	No control panel
J410	DPMP-01 door mounting kit
J413	DPMP-02 door mounting kit (surface mounting) for the panel
J425	ACS-AP-I control panel
K451	FDNA-01 DeviceNet™ adapter module
K454	FPBA-01 PROFIBUS DP adapter module
K457	FCAN-01 CANopen adapter module
K458	FSCA-01 RS-485 (Modbus/RTU) adapter module
K462	FCNA-01 ControlNet™ adapter module
K469	FECA-01 EtherCat adapter module
K470	FEPL-02 EtherPOWERLINK adapter module
K475	FENA-21 Ethernet adapter module for EtherNet/IP™, Modbus TCP and PROFINET IO protocols, 2-port
K490	FEIP-21 EtherNet/IP adapter module
K491	FMBT-21 Modbus/TCP adapter module
K492	FPNO-21 PROFINET IO adapter module
L500	FIO-11 analog I/O extension module (1, 2 or 3 pcs)
L501	FIO-01 digital I/O extension module
L502	FEN-31 HTL incremental encoder interface module
L503	FDCO-01 optical DDCS communication adapter module
L508	FDCO-02 optical DDCS communication adapter module
L516	FEN-21 resolver interface module
L517	FEN-01 TTL incremental encoder interface module
L518	FEN-11 TTL absolute encoder interface module
L525	FAIO-01 analog I/O extension module
L526	FDIO-01 digital I/O extension module
L536	FPTC-01 thermistor protection module

Code	Description
L537	FPTC-02 ATEX-certified thermistor protection module
P904	Extended warranty (24 months from commissioning or 30 months from delivery)
P909	Extended warranty (36 months from commissioning or 42 months from delivery)
P911	Extended warranty (60 months from commissioning or 66 months from delivery)
P940	Version for cabinet mounting (Drive module without front covers)
P952	European Union Country of Origin
Q971	ATEX-certified safe disconnection function
Q972	FSO-21 safety functions module
Q973	FSO-12 safety functions module
Q982	PROFIsafe with FSO-xx safety functions module and FENA-21 Ethernet adapter module
Q986	PROFIsafe safety functions module, FSPS-21
R700	Printed manuals in English
R701	Printed manuals in German[1)]
R702	Printed manuals in Italian[1)]
R703	Printed manuals in Dutch[1)]
R704	Printed manuals in Danish[1)]
R705	Printed manuals in Swedish[1)]
R706	Printed manuals in Finnish[1)]
R707	Printed manuals in French[1)]
R708	Printed manuals in Spanish[1)]
R709	Printed manuals in Portuguese[1)]
R711	Printed manuals in Russian[1)]
R712	Printed manuals in Chinese[1)]
R714	Printed manuals in Turkish[1)]

1) Manuals in English may be included if a translation in the specified language is not available.

4

Mechanical installation

Contents of this chapter

This chapter tells how to examine the installation site, unpack and examine the delivery and install the drive mechanically.

Cabinet installation (options +P940 and +P944)

See also ACS880…+P940 and +P944 drive modules supplement (3AUA0000145446 [English]).

For generic guidelines for planning the installation of the drive modules into a user-defined cabinet, see Drive modules cabinet design and construction instructions (3AUA0000107668 [English]).

Vibration dampers (option +C131)

Marine type approval (option +C132) requires the installation of vibration dampers for frame R8 in wall installations. See Vibration dampers (option +C131) for ACS880-11 and ACS880-31 frame R8 drives installation instructions (3AXD50000956265 [English]). The guide is included in the vibration damper package.

Flange mounting (option +C135)

See also:

Manual name	Code (English)
ACS880-11..., ACS880-31..., ACH580-31... and ACQ580-31...+C135 drives with flange mounting kit supplement	3AXD50000349838
ACS880-11..., ACS880-31..., ACH580-31... and ACQ580-31...+C135 frame R3 flange mounting kit quick installation guide	3AXD50000181506
ACS880-11...+C135, ACS880-31...+C135, ACH580-31...+C135 and ACQ580-31...+C135 frames R6 and R8 flange mounting kit quick installation guide	3AXD50000133611

Safety

WARNING!
Frames R6 and R8: Lift the drive with a lifting device. Use the lifting eyes of the drive. Do not tilt the drive. **The drive is heavy and its center of gravity is high. An overturning drive can cause physical injury**.

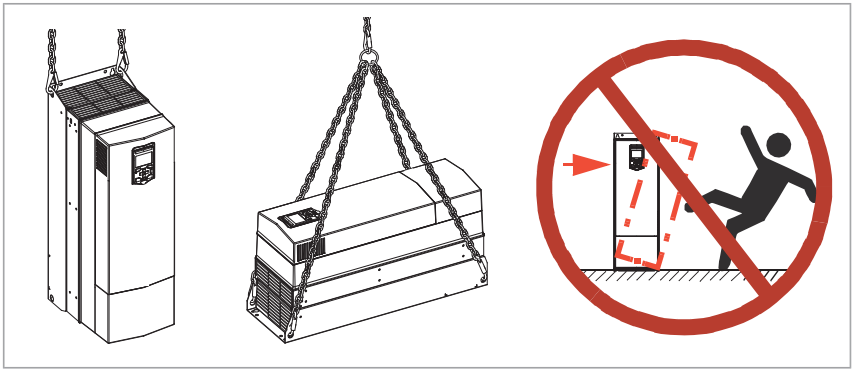

Examining the installation site

Examine the installation site. Make sure that:

- The installation site is sufficiently ventilated or cooled to remove heat from the drive. See the technical data.
- The ambient conditions of the drive meet the specifications. See the technical data.
- The material behind, above and below the drive is non-flammable.
- The installation surface is as close to vertical as possible and strong enough to support the drive.

- There is sufficient free space around the drive for cooling, maintenance, and operation. See the free space specifications for the drive.
- Make sure that there are no sources of strong magnetic fields such as high-current single-core conductors or contactor coils near the drive. A strong magnetic field can cause interference or inaccuracy in the operation of the drive.

Installation positions

There are three alternative ways to install the drive:

- vertically alone. Do not install the drive upside down.
- vertically side by side
- horizontally alone, IP21 (UL Type 1) only.

  Note: The vibration specification in the technical data may not be fulfilled.

  Note: IP21 (UL Type 1) construction only meets IP20 (UL Type Open) in horizontal position.

Free space requirements

Free space requirements are shown in the drawings below.

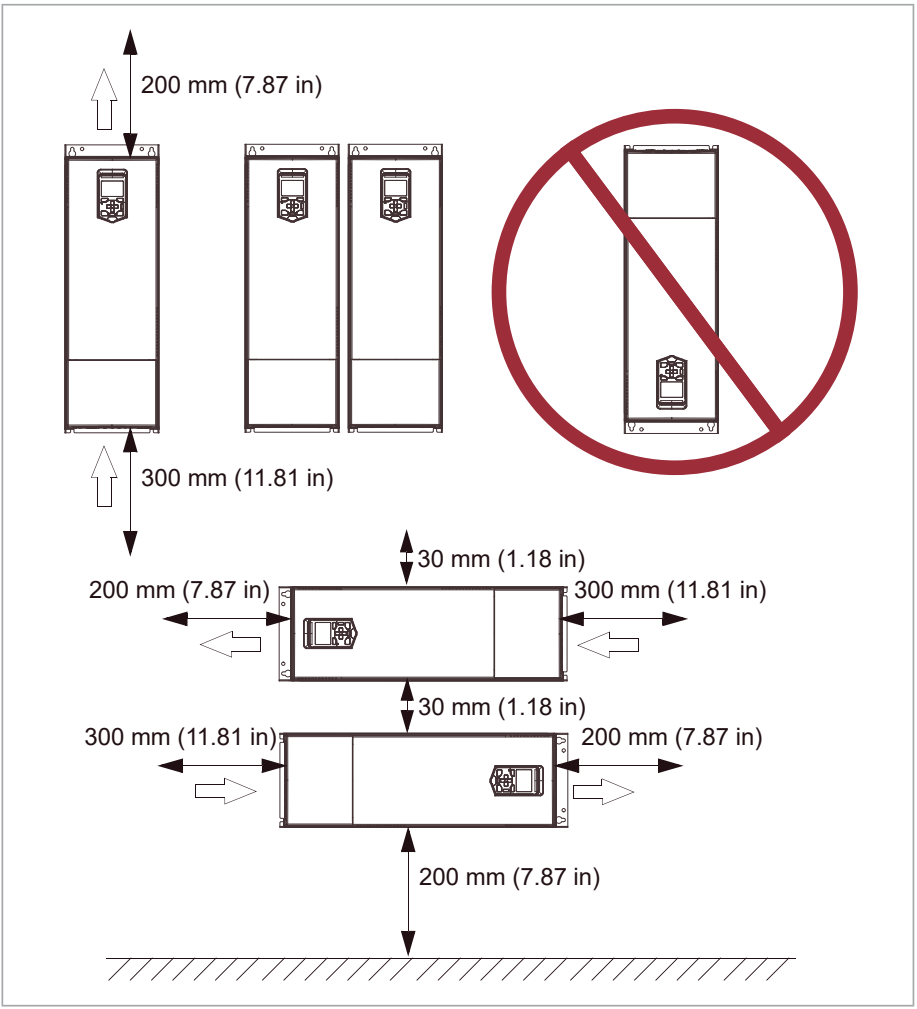

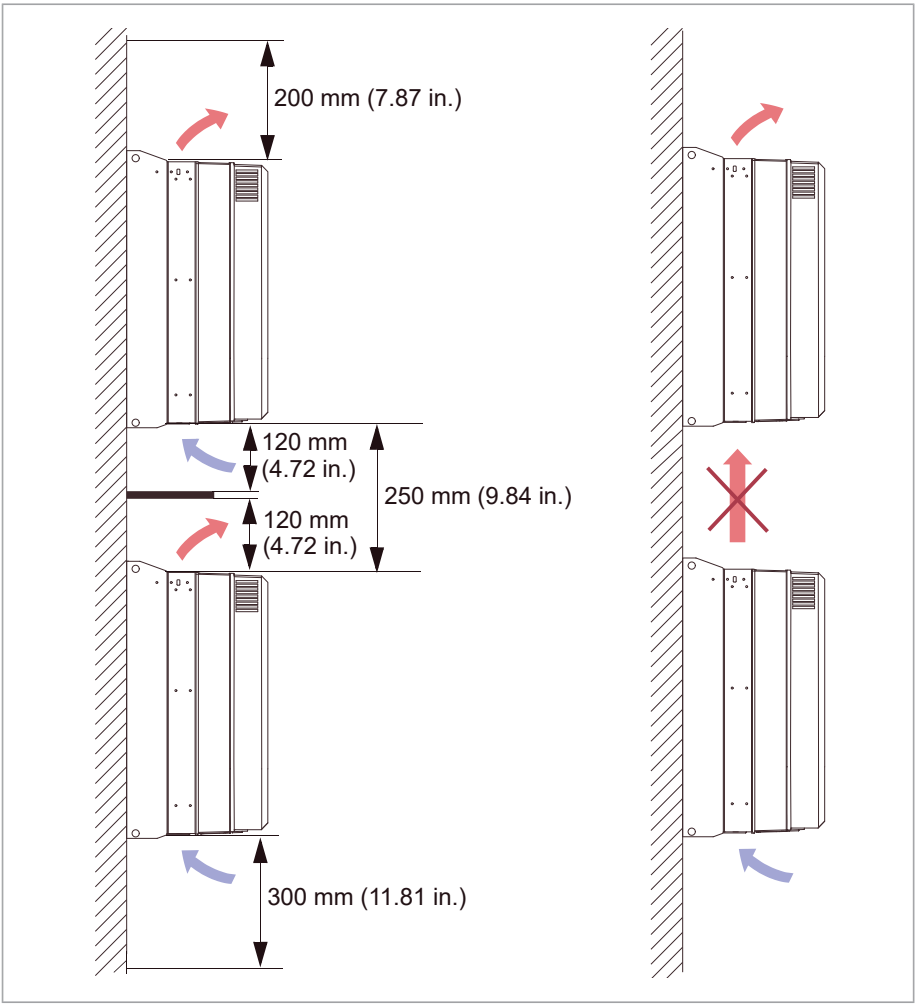

Necessary tools

To move a heavy drive, you need crane, fork-lift or pallet truck (check load capacity!).

To lift a heavy drive, you need a hoist.

To install the drive mechanically, you need the following tools:

- drill with suitable bits
- screwdriver set (Torx, flat and/or Phillips, as appropriate)
- torque wrench

- socket set, Hex key set (metric)
- tape measure, if you will not be using the provided mounting template.

Moving the drive

Move the drive in its transport package to the installation site.

Unpacking and examining delivery

The figure below shows the drive package with its contents. Examine that all items are present and there are no signs of damage. Read the data on the type designation label of the drive to make sure that the drive is of the correct type.

R3 IP21 (UL Type 1) and IP55 (UL Type 12)

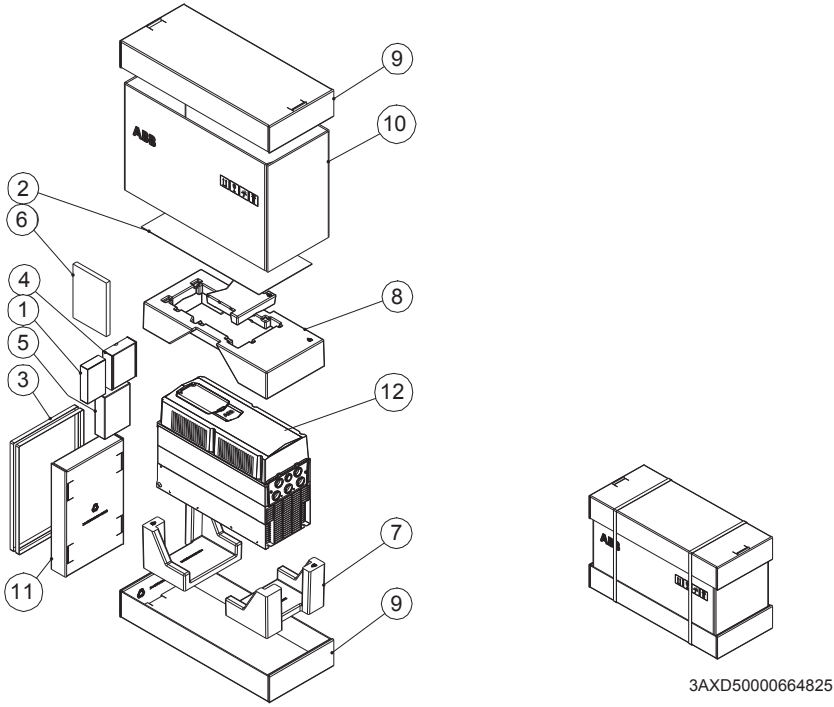

1	Control panel	7	Package cushion
2	Mounting template	8	Foam cushion
3	Package straps	9	Cardboard tray
4	I/O option module	10	Cardboard sleeve
5	Fieldbus option module	11	Cardboard box which contains control panel box 1 and option boxes 4 and 5
6	Printed quick installation and start-up guide and manuals, multilingual residual voltage warning sticker	12	Drive

To unpack:
- Cut the straps (3).
- Remove the tray (9) and sleeve (10).
- Remove the cover-protecting film.
- Lift the drive.

R6 IP21 (UL Type 1)

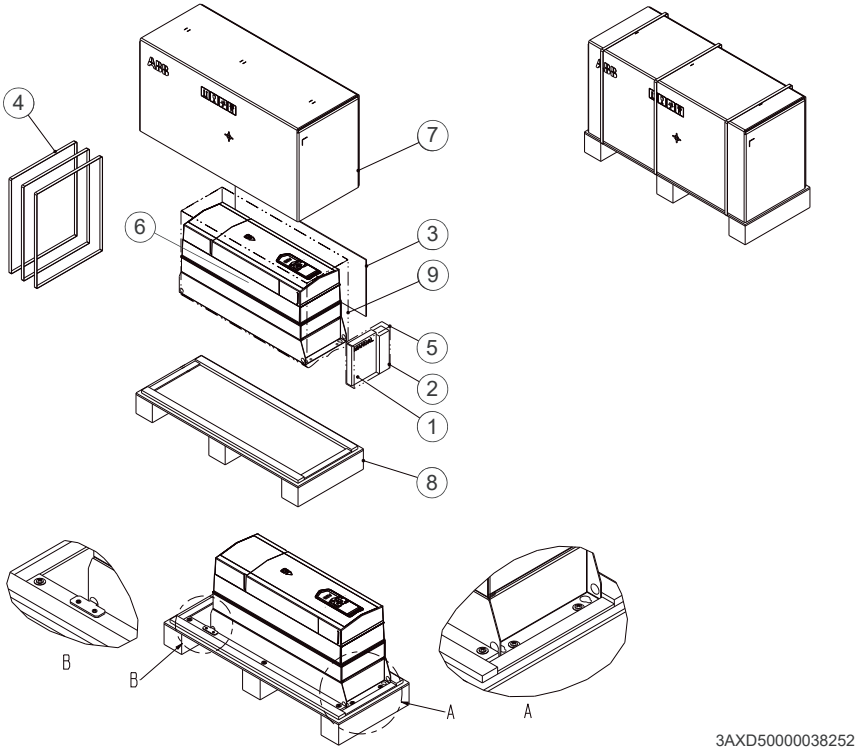

1	Printed quick installation and stat-up guide and manuals, multilingual residual voltage warning sticker	6	Drive with factory installed options
2	Accessories	7	Outer box
3	Mounting template	8	Pallet
4	Package straps	9	VCI bag
5	Plastic bag		

To unpack:
- Cut the straps (4).
- Remove the outer box (7).
- Open the VCI bag (9).
- Undo the attaching screws (A, B).
- Lift the drive.

R6 IP55 (UL Type 12)

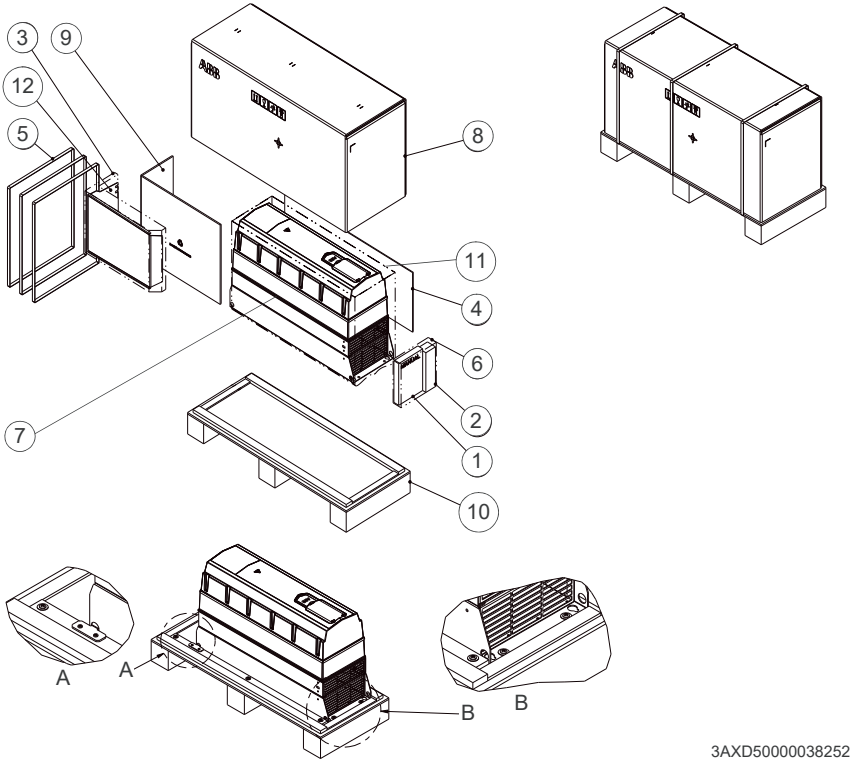

1	Printed quick installation and start-up guide and manuals, multilingual residual voltage warning sticker	7	Drive with factory installed options
2	Accessories	8	Outer box
3	Bubble wrap	9	Cardboard insert
4	Mounting template	10	Pallet
5	Package straps	11	VCI bag
6	Plastic bag	12	UL Type 12 hood

To unpack:
- Cut the straps (5).
- Remove the outer box (8).
- Open the VCI bag (11).
- Undo the attaching screws (A, B).
- Lift the drive.

R8 IP21 (UL Type 1)

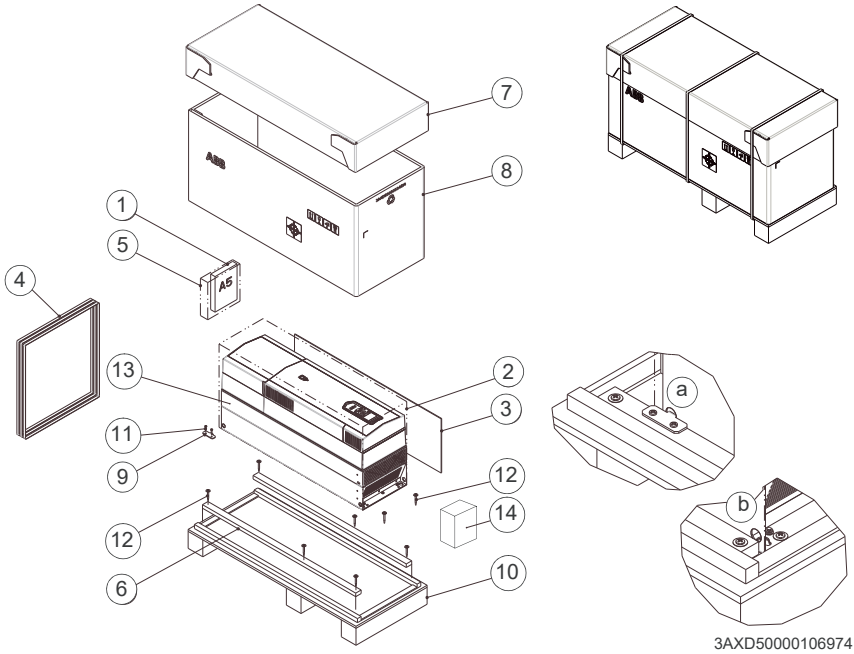

1	Printed quick installation and start-up guide and manuals, multilingual residual voltage warning sticker	8	Cardboard sleeve
2	VCI bag	9	Packing bracket
3	Mounting template	10	Pallet
4	Package straps	11	Screw
5	Plastic bag	12	Screw
6	Plywood support	13	Drive with factory installed options
7	Tray	14	Common mode filter (option +E208)

To unpack:
- Cut the straps (4).
- Remove the tray (7) and cardboard sleeve (8).
- Open the VCI bag (2).
- Undo the attaching screws (a, b).
- Lift the drive.

R8 IP55 (UL Type 12)

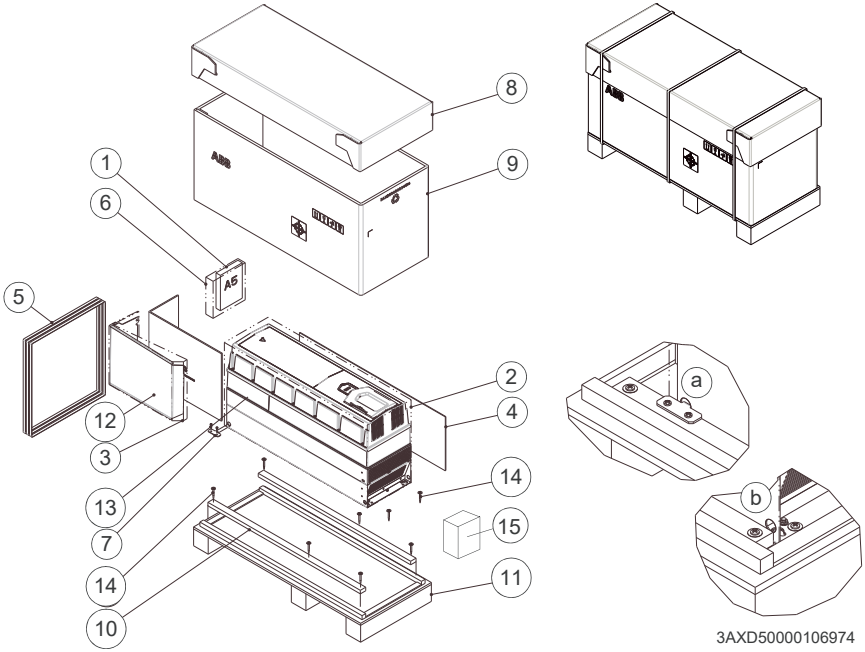

1	Printed quick installation and start-up guide and manuals, multilingual residual voltage warning sticker	9	Cardboard sleeve
2	VCI bag	10	Plywood support
3	Bubble wrap	11	Pallet
4	Mounting template	12	UL Type 12 hood
5	Package straps	13	Drive with factory installed options
6	Plastic bag	14	Screws
7	Packing bracket	15	Common mode filter (option +E208)
8	Tray	-	

To unpack:
- Cut the straps (5).
- Remove the tray (8) and cardboard sleeve (9).
- Open the VCI bag (2).
- Undo the attaching screws (a, b).
- Lift the drive.

Installing the drive vertically

See section Free space requirements (page 44) for the required free space above and below the drive.

1. To mark the hole locations, use the mounting template included in the package. Do not leave the mounting template under the drive. The drive dimensions and hole locations are also shown in the dimension drawings.

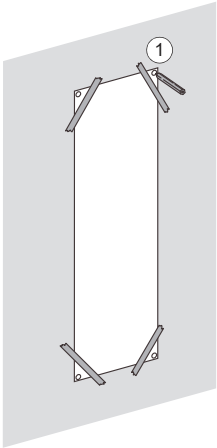

2. Drill the mounting holes.
3. Insert anchors or plugs into the holes and start the screws or bolts into the anchors or plugs. Drive the screws or bolts long enough into the wall to make them carry the weight of the drive.
4. Put the drive onto the bolts on the wall.
5. For R6 and R8 with option +B056 (UL Type 12): Install the hood on top of the drive before you tighten the upper attaching bolts. Put the vertical edge of the hood in between the wall and the drive back plate.

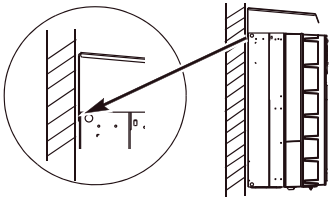

6. Tighten the bolts in the wall securely.

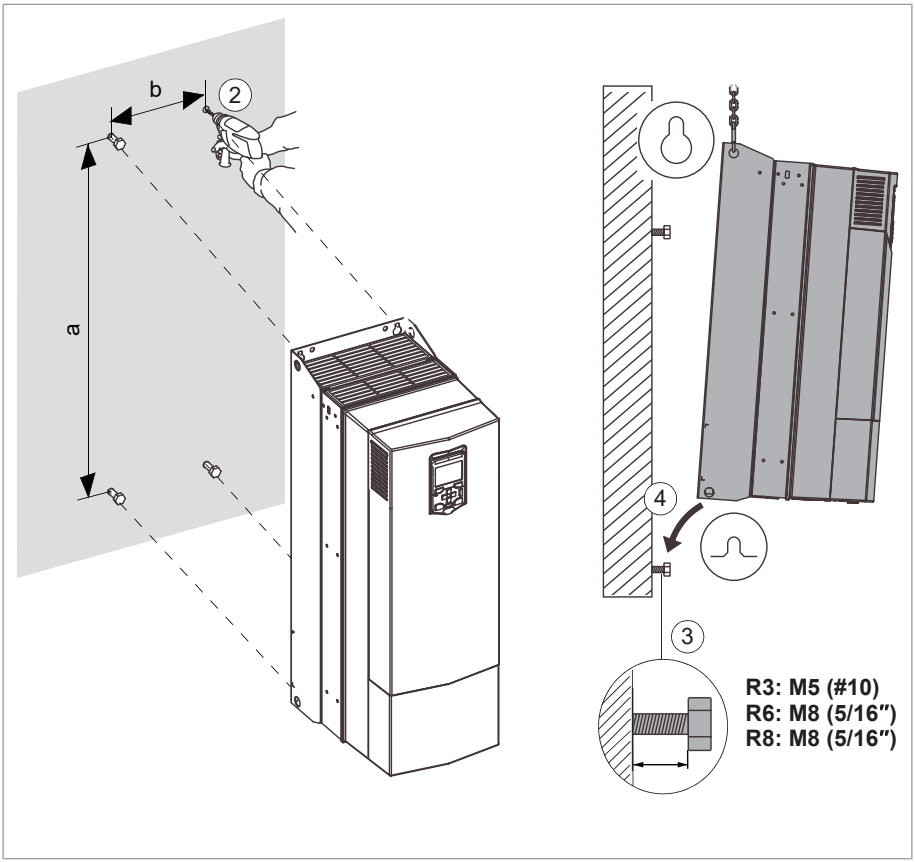

	R3		R6		R8	
	mm	in	mm	in	mm	in
a	474	18.66	753	29.64	945	37.20
b	160	6.30	212.5	8.37	262.5	10.33

	R3		R6		R8	
	kg	lb	kg	lb	kg	lb
IP21, UL Type 1	21.3	47	61.0	135	118	260
IP55, UL Type 12	23.3	52	63	139	124	273

Installing the drive vertically side by side

Drives can be installed side by side. Follow the steps in section Installing the drive vertically (page 52).

Installing the drive horizontally

The drive can be installed with either the left or right side up. Follow the steps in section Installing the drive vertically (page 52). For free space requirements, see section Free space requirements (page 44).

5

Guidelines for planning the electrical installation

Contents of this chapter

This chapter contains guidelines for planning the electrical installation of the drive.

Limitation of liability

The installation must always be designed and made according to applicable local laws and regulations. ABB does not assume any liability whatsoever for any installation which breaches the local laws and/or other regulations. Furthermore, if the recommendations given by ABB are not followed, the drive may experience problems that the warranty does not cover.

Selecting the main supply disconnecting device

You must equip the drive with a main supply disconnecting device which meets the local safety regulations. You must be able to lock the disconnecting device to the open position for installation and maintenance work.

European Union and United Kingdom

To comply with European Union directives and United Kingdom regulations related to standard EN 60204-1, the disconnecting device must be one of these types:

- switch-disconnector of utilization category AC-23B (IEC 60947-3)
- disconnector that has an auxiliary contact that in all cases causes switching devices to break the load circuit before the opening of the main contacts of the disconnector (EN 60947-3)
- circuit-breaker suitable for isolation in accordance with IEC 60947-2.

North America

Installations must be compliant with NFPA 70 (NEC)[1] and/or Canadian Electrical Code (CE) along with state and local codes for your location and application.

[1] National Fire Protection Association 70 (National Electric Code).

Other regions

The disconnecting device must conform to the applicable local safety regulations.

Implementing a fast switch over between the power line and generator

You can do a fast switch over between the power line and generator without stopping the drive. Starting and stopping the drive takes more time than the fast switch over.

WARNING! The drive requires at least a 50 ms fast switch over time and the same phase order in the switching. A shorter switch over time or a different phase order can cause a drive fault trip or damage to the drive.

Consult ABB for implementation instructions of the fast switch over system.

Selecting the main contactor

You can equip the drive with a main contactor.

Follow these guidelines when you select a customer-defined main contactor:

- Dimension the contactor according to the nominal voltage and current of the drive. Also consider the environmental conditions such as surrounding air temperature.
- IEC devices only: Select contactor with utilization category AC-1 (number of operations under load) according to IEC 60947-4.
- Consider the application life time requirements.

North America

Installations must be compliant with NFPA 70 (NEC)[1] and/or Canadian Electrical Code (CE) along with state and local codes for your location and application.

[1] National Fire Protection Association 70 (National Electric Code).

Other regions

The disconnecting device must conform to the applicable local safety regulations.

Examining the compatibility of the motor and drive

Use asynchronous AC induction motors, permanent magnet synchronous motors, AC induction servomotors or ABB synchronous reluctance motors (SynRM motors) with the drive.

Select the motor size and drive type from the rating table on basis of the AC line voltage and motor load. You can find the rating table in the appropriate hardware manual. You can also use the DriveSize PC tool.

Make sure that the motor can be used with an AC drive. See Requirements tables (page 58). For basics of protecting the motor insulation and bearings in drive systems, see Protecting the motor insulation and bearings (page 57).

Note:

- Consult the motor manufacturer before using a motor with nominal voltage that differs from the AC line voltage connected to the drive input.
- The voltage peaks at the motor terminals are relative to the supply voltage of the drive, not to the drive output voltage.

Protecting the motor insulation and bearings

The drive employs modern IGBT inverter technology. Regardless of frequency, the drive output comprises pulses of approximately the drive DC bus voltage with a very short rise time. The pulse voltage can almost double at the motor terminals, depending on the attenuation and reflection properties of the motor cable and the terminals. This can cause additional stress on the motor and motor cable insulation.

Modern variable speed drives with their fast rising voltage pulses and high switching frequencies can generate current pulses that flow through the motor bearings. This can gradually erode the bearing races and rolling elements.

d*u*/d*t* filters protect motor insulation system and reduce bearing currents. Common mode filters mainly reduce bearing currents. Insulated N-end (non-drive end) bearings protect the motor bearings.

Requirements tables

These tables show how to select the motor insulation system and when a drive d*u*/d*t* and common mode filters and insulated N-end (non-drive end) motor bearings are required. Ignoring the requirements or improper installation may shorten motor life or damage the motor bearings and voids the warranty.

Requirements for ABB motors, P_n < 100 kW (134 hp)

See also Abbreviations (page 62).

Motor type	Nominal AC line voltage	Requirement for	
		Motor insulation system	ABB d*u*/d*t* and common mode filters, insulated N-end motor bearings
			P_n < 100 kW and frame size < IEC 315
			P_n < 134 hp and frame size < NEMA 500
Random-wound M2_, M3_ and M4_	U_n ≤ 500 V	Standard	-
	500 V < U_n ≤ 600 V	Standard	+ d*u*/d*t*
		Reinforced	-
	600 V < U_n ≤ 690 V (cable length ≤ 150 m)	Reinforced	+ d*u*/d*t*
	600 V < U_n ≤ 690 V (cable length > 150 m)	Reinforced	-
Form-wound HX_ and AM_	380 V < U_n ≤ 690 V	Standard	N/A
Old [1] form-wound HX_ and modular	380 V < U_n ≤ 690 V	Check with the motor manufacturer.	+ N + d*u*/d*t* with voltages over 500 V + CMF
Random-wound HX_ and AM_ [2]	0 V < U_n ≤ 500 V	Enamelled wire with fiber glass taping	+ N + CMF
	500 V < U_n ≤ 690 V		+ N + d*u*/d*t* + CMF
HDP	Consult the motor manufacturer.		

[1] manufactured before 1.1.1998

[2] For motors manufactured before 1.1.1998, check for additional instructions with the motor manufacturer.

Requirements for ABB motors, $P_n \geq 100$ kW (134 hp)

See also Abbreviations (page 62).

Motor type	Nominal AC line voltage	Requirement for		
		Motor insulation system	ABB d*u*/d*t* and common mode filters, insulated N-end motor bearings	
			100 kW ≤ P_n < 350 kW or IEC 315 ≤ frame size < IEC 400	P_n ≥ 350 kW or frame size ≥ IEC 400
			134 hp ≤ P_n < 469 hp or NEMA 500 ≤ frame size ≤ NEMA 580	P_n ≥ 469 hp or frame size > NEMA 580
Random-wound M2_, M3_ and M4_	U_n ≤ 500 V	Standard	+ N	+ N + CMF
	500 V < U_n ≤ 600 V	Standard	+ N + d*u*/d*t*	+ N + d*u*/d*t* + CMF
		Reinforced	+ N	+ N + CMF
	600 V < U_n ≤ 690 V (cable length ≤ 150 m)	Reinforced	+ N + d*u*/d*t*	+ N + d*u*/d*t* + CMF
	600 V < U_n ≤ 690 V (cable length > 150 m)	Reinforced	+ N	+ N + CMF
Form-wound HX_ and AM_	380 V < U_n ≤ 690 V	Standard	+ N + CMF	P_n < 500 kW: +N + CMF
				P_n ≥ 500 kW: +N + d*u*/d*t* + CMF
Old[1] form-wound HX_ and modular	380 V < U_n ≤ 690 V	Check with the motor manufacturer.	+ N + d*u*/d*t* with voltages over 500 V + CMF	
Random-wound HX_ and AM_ [2]	0 V < U_n ≤ 500 V	Enamelled wire with fiber glass taping	+ N + CMF	
	500 V < U_n ≤ 690 V		+ N + d*u*/d*t* + CMF	
HDP	Consult the motor manufacturer.			

1) manufactured before 1.1.1998

2) For motors manufactured before 1.1.1998, check for additional instructions with the motor manufacturer.

Requirements for non-ABB motors, P_n < 100 kW (134 hp)

See also Abbreviations (page 62).

Motor type	Nominal AC line voltage	Requirement for	
		Motor insulation system	ABB d*u*/d*t* and common mode filters, insulated N-end motor bearings
			P_n < 100 kW and frame size < IEC 315
			P_n < 134 hp and frame size < NEMA 500
Random-wound and form-wound	U_n ≤ 420 V	Standard: $\hat{U}_{LL}$ = 1300 V	-
	420 V < U_n ≤ 500 V	Standard: $\hat{U}_{LL}$ = 1300 V	+ d*u*/d*t*
		Reinforced: $\hat{U}_{LL}$ = 1600 V, 0.2 µs rise time	-
	500 V < U_n ≤ 600 V	Reinforced: $\hat{U}_{LL}$ = 1600 V	+ d*u*/d*t*
		Reinforced: $\hat{U}_{LL}$ = 1800 V	-
	600 V < U_n ≤ 690 V	Reinforced: $\hat{U}_{LL}$ = 1800 V	+ d*u*/d*t*
		Reinforced: $\hat{U}_{LL}$ = 2000 V, 0.3 µs rise time [1)]	-

1) If the intermediate DC circuit voltage of the drive is increased from the nominal level due to long term resistor braking cycles, check with the motor manufacturer if additional output filters are needed.

Requirements for non-ABB motors, $P_n \geq 100$ kW (134 hp)

See also Abbreviations (page 62).

Motor type	Nominal AC line voltage	Requirement for		
		Motor insulation system	ABB d*u*/d*t* and common mode filters, insulated N-end motor bearings	
			100 kW ≤ P_n < 350 kW or IEC 315 ≤ frame size < IEC 400	P_n ≥ 350 kW or frame size ≥ IEC 400
			134 hp ≤ P_n < 469 hp or NEMA 500 ≤ frame size ≤ NEMA 580	P_n ≥ 469 hp or frame size > NEMA 580
Random-wound and form-wound	U_n ≤ 420 V	Standard: $\hat{U}_{LL}$ = 1300 V	+ N or CMF	+ N + CMF
	420 V < U_n ≤ 500 V	Standard: $\hat{U}_{LL}$ = 1300 V	+ d*u*/d*t* + (N or CMF)	+ N + d*u*/d*t* + CMF
		Reinforced: $\hat{U}_{LL}$ = 1600 V, 0.2 µs rise time	+ N or CMF	+ N + CMF
	500 V < U_n ≤ 600 V	Reinforced: $\hat{U}_{LL}$ = 1600 V	+ d*u*/d*t* + (N or CMF)	+ N + d*u*/d*t* + CMF
		Reinforced: $\hat{U}_{LL}$ = 1800 V	+ N or CMF	+ N + CMF
	600 V < U_n ≤ 690 V	Reinforced: $\hat{U}_{LL}$ = 1800 V	+ d*u*/d*t* + N	+ N + d*u*/d*t* + CMF
		Reinforced: $\hat{U}_{LL}$ = 2000 V, 0.3 µs rise time [1]	+ N + CMF	+ N + CMF

[1] If the intermediate DC circuit voltage of the drive is increased from the nominal level due to long term resistor braking cycles, check with the motor manufacturer if additional output filters are needed.

Abbreviations

Abbr.	Definition
U_n	Nominal AC line voltage
$\hat{U}_{LL}$	Peak line-to-line voltage at motor terminals which the motor insulation must withstand
P_n	Motor nominal power
d*u*/d*t*	d*u*/d*t* filter at the output of the drive
CMF	Common mode filter of the drive
N	N-end bearing: insulated motor non-drive end bearing
n.a.	Motors of this power range are not available as standard units. Consult the motor manufacturer.

Availability of d*u*/d*t* filter and common mode filter by drive type

See chapter Common mode, du/dt and sine filters (page 237).

Additional requirements for explosion-safe (EX) motors

If you use an explosion-safe (EX) motor, obey the rules in the requirements table above. In addition, consult the motor manufacturer for any further requirements.

Additional requirements for ABB motors of types other than M2_, M3_, M4_, HX_ and AM_

Use the selection criteria given for non-ABB motors.

Additional requirements for the regenerative and low harmonics drives

It is possible to increase the intermediate circuit DC voltage from the nominal (standard) level with a parameter in the control program. If you choose to do this, select the motor insulation system which withstands the increased DC voltage level.

Additional requirements for ABB high-output and IP23 motors

The rated output power of high output motors is higher than what is stated for the particular frame size in EN 50347 (2001).

This table shows the requirements for protecting the motor insulation and bearings in drive systems for ABB random-wound motor series (for example, M3AA, M3AP and M3BP).

Nominal AC supply voltage	Requirement for			
	Motor insulation system	ABB d*u*/d*t* and common mode filters, insulated N-end motor bearings		
		P_n < 100 kW	100 kW ≤ P_n < 200 kW	P_n ≥ 200 kW
		P_n < 140 hp	140 hp ≤ P_n < 268 hp	P_n ≥ 268 hp
U_n ≤ 500 V	Standard	-	+ N	+ N + CMF
500 V < U_n ≤ 600 V	Standard	+ d*u*/d*t*	+ d*u*/d*t* + N	+ d*u*/d*t* + N + CMF
	or			
	Reinforced	-	+ N	+ N + CMF
600 V < U_n ≤ 690 V	Reinforced	+ d*u*/d*t*	+ d*u*/d*t* + N	+ d*u*/d*t* + N + CMF

Additional requirements for non-ABB high-output and IP23 motors

The rated output power of high-output motors is higher than what is stated for the particular frame size in EN 50347 (2001).

If you plan to use a non-ABB high-output motor or an IP23 motor, consider these additional requirements for protecting the motor insulation and bearings in drive systems:

- If motor power is below 350 kW: Equip the drive and/or motor with the filters and/or bearings according to the table below.
- If motor power is above 350 kW: Consult the motor manufacturer.

Nominal AC supply voltage	Requirement for		
	Motor insulation system	ABB d*u*/d*t* and common mode filters, insulated N-end motor bearings	
		P_n < 100 kW or frame size < IEC 315	100 kW < P_n < 350 kW or IEC 315 < frame size < IEC 400
		P_n < 134 hp or frame size < NEMA 500	134 hp < P_n < 469 hp or NEMA 500 < frame size < NEMA 580
U_n ≤ 420 V	Standard: $\hat{U}_{LL}$ = 1300 V	+ N or CMF	+ N or CMF
420 V < U_n < 500 V	Standard: $\hat{U}_{LL}$ = 1300 V	+ d*u*/d*t* + (N or CMF)	+ N + d*u*/d*t* + CMF
	or		
	Reinforced: $\hat{U}_{LL}$ = 1600 V, 0.2 microsecond rise time	+ N or CMF	+ N or CMF
500 V < U_n ≤ 600 V	Reinforced: $\hat{U}_{LL}$ = 1600 V	+ d*u*/d*t* + (N or CMF)	+ N + d*u*/d*t* + CMF
	or		
	Reinforced: $\hat{U}_{LL}$ = 1800 V	+ N or CMF	+ N + CMF
600 V < U_n ≤ 690 V	Reinforced: $\hat{U}_{LL}$ = 1800 V	+ N + d*u*/d*t*	+ N + d*u*/d*t* + CMF
	Reinforced: $\hat{U}_{LL}$ = 2000 V, 0.3 microsecond rise time[1)]	+ N + CMF	+ N + CMF

1) If the intermediate DC circuit voltage of the drive is increased from the nominal level due to long term resistor braking cycles, check with the motor manufacturer if additional output filters are needed.

Additional data for calculating the rise time and the peak line-to-line voltage

The diagrams below show the relative peak line-to-line voltage and rate of change of voltage as a function of the motor cable length. If you need to calculate the actual peak voltage and voltage rise time considering the actual cable length, proceed as follows:

- Peak line-to line voltage: Read the relative $\hat{U}_{LL}/U_n$ value from the diagram below and multiply it by the nominal supply voltage (U_n).
- Voltage rise time: Read the relative values $\hat{U}_{LL}/U_n$ and $(du/dt)/U_n$ from the diagram below. Multiply the values by the nominal supply voltage (U_n) and substitute into equation $t = 0.8 \cdot \hat{U}_{LL}/(du/dt)$.

A	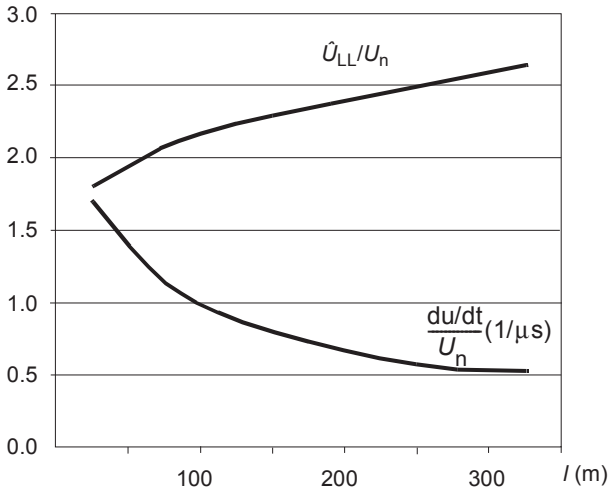
B	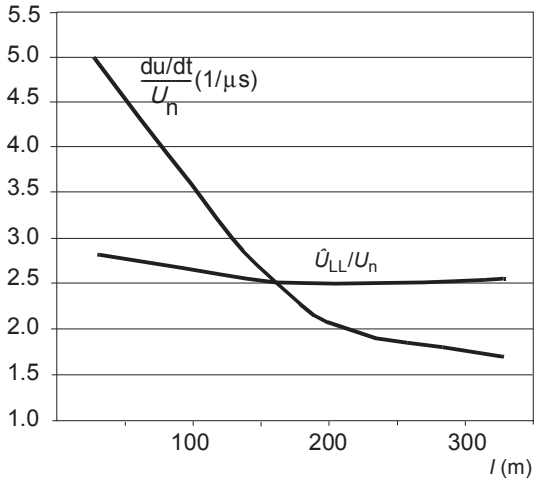
A	Drive with du/dt filter
B	Drive without du/dt filter
l	Motor cable length
$\hat{U}_{LL}/U_N$	Relative peak line-to-line voltage
$(du/dt)/U_N$	Relative du/dt value

Note: $\hat{U}_{LL}$ and du/dt values are approximately 20% higher with resistor braking.

Additional note for sine filters

A sine filter also protects the motor insulation system. The peak phase-to-phase voltage with a sine filter is approximately 1.5 · U_n.

Selecting drives for synchronous reluctance motors (SynRM motors)

Select a drive for a synchronous reluctance motor (SynRM motor) according to the motor current rating for the application load cycle (nominal use, light-duty use or heavy-duty use). Apply all necessary deratings given in section Deratings (page 166).

Note: SynRM motor current ratings are generally higher compared to induction motor current ratings for the same power rating.

Selecting the power cables

General guidelines

Select the input power and motor cables according to local regulations.

- **Current:** Select a cable capable of carrying the maximum load current and suitable for the prospective short-circuit current provided by the supply network. The method of installation and ambient temperature affect the cable current carrying capacity. Obey local regulations and laws.
- **Temperature:** For an IEC installation, select a cable rated for at least 70 °C (158 °F) maximum permissible temperature of conductor in continuous use. For North America, select a cable rated for at least 75 °C (167 °F).
  Important: For certain product types or option configurations higher temperature rating may be required. See the technical data for details.
- **Voltage:** 600 V AC cable is accepted for up to 500 V AC. 750 V AC cable is accepted for up to 600 V AC. 1000 V AC cable is accepted for up to 690 V AC.

To comply with the EMC requirements of the CE mark, use one of the preferred cable types. See Preferred power cable types (page 67).

Symmetrical shielded cable reduces electromagnetic emission of the whole drive system as well as the stress on motor insulation, bearing currents and wear.

Metal conduit reduces electromagnetic emission of the whole drive system.

Typical power cable sizes

See the technical data.

Power cable types

Preferred power cable types

This section presents the preferred cable types. Make sure that the selected cable type also complies with local/state/country electrical codes.

Cable type	Use as input power cabling	Use as motor cabling and as brake resistor cabling
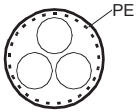 Symmetrical shielded (or armored) cable with three phase conductors and concentric PE conductor as shield (or armor)	Yes	Yes
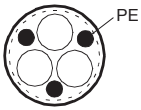 Symmetrical shielded (or armored) cable with three phase conductors and symmetrically constructed PE conductor and a shield (or armor)	Yes	Yes
Symmetrical shielded (or armored) cable with three phase conductors and a shield (or armor), and separate PE conductor/cable [1]	Yes	Yes

[1] A separate PE conductor is required if the conductivity of the shield (or armor) is not sufficient for the PE use.

Alternate power cable types

Cable type	Use as input power cabling	Use as motor cabling and as brake resistor cabling
Four-conductor cabling in PVC conduit or jacket (three phase conductors and PE)	Yes with phase conductor smaller than 10 mm^2 (8 AWG) Cu.	Yes with phase conductor smaller than 10 mm^2 (8 AWG) Cu, or motors up to 30 kW (40 hp). **Note:** Shielded or armored cable, or cabling in metal conduit is always recommended to minimize radio frequency interference.
Four-conductor cabling in metal conduit (three phase conductors and PE). For example, EMT, or four-conductor armored cable	Yes	Yes with phase conductor smaller than 10 mm^2 (8 AWG) Cu, or motors up to 30 kW (40 hp)
Shielded (Al/Cu shield or armor)[1] four-conductor cable (three phase conductors and a PE)	Yes	Yes with motors up to 100 kW (135 hp). A potential equalization between the frames of motor and driven equipment is required.

[1] Armor may act as an EMC shield, as long as it provides the same performance as a concentric EMC shield of a shielded cable. To be effective at high frequencies, the shield conductivity must be at least 1/10 of the phase conductor conductivity. The effectiveness of the shield can be evaluated based on the shield inductance, which must be low and only slightly dependent on frequency. The requirements are easily met with a copper or aluminum shield/armor. The cross-section of a steel shield must be ample and the shield helix must have a low gradient. A galvanized steel shield has a better high-frequency conductivity than a non-galvanized steel shield.

Not allowed power cable types

Cable type	Use as input power cabling	Use as motor cabling and as brake resistor cabling
Symmetrical shielded cable with individual shields for each phase conductor	No	No

Additional guidelines – North America

ABB recommends the use of metallic conduit for power wiring. ABB also recommends the use of symmetrical shielded VFD cable between drive and motor(s).

This table shows examples of methods for wiring the drive. Refer to NFPA 70 (NEC) along with state and local codes for the appropriate methods for your application.

Wiring method	Notes
Conduit - Metallic [1] [2]	
Electrical metallic tubing: Type EMT	Prefer symmetrical shielded VFD cable. Use separate conduit run for each motor. Do not run input power wiring and motor wiring in the same conduit.
Rigid metal conduit: Type RMC	
Liquid-tight flexible metal electrical conduit: Type LFMC	
Conduit - Non-metallic [2] [3]	
Liquid-tight flexible non-metallic conduit: Type LFNC	Prefer symmetrical shielded VFD cable. Use separate conduit run for each motor. Do not run input power wiring and motor wiring in the same conduit.
Wireways [2]	
Metallic	Prefer symmetrical shielded VFD cable. Separate motor wiring from input power wiring and other low voltage wiring. Do not run outputs of multiple drives parallel. Bundle each cable (wiring) together and use separators where possible.
Free air [2]	
Enclosures, air handlers, etc.	Prefer symmetrical shielded VFD cable. Allowed internally in enclosures when in accordance with UL.

1) Metallic conduit may be used as an additional ground path, provided this path is a solid path capable of handling ground currents.

2) See NFPA NFPA 70 (NEC), UL, and local codes for your application.

3) Non-metallic conduit use underground is allowed; however, these installations inherently have an increased chance for nuisance problems due to the potential for water/moisture in the conduit. Water/moisture in the conduit increases the likelihood of VFD faults or warnings. Proper installation is required to make sure there is no intrusion of water/moisture.

Metal conduit

Couple separate parts of a metal conduit together: bridge the joints with a ground conductor bonded to the conduit on each side of the joint. Also bond the conduits to the drive enclosure and motor frame. Use separate conduits for input power, motor, brake resistor, and control wiring. Do not run motor wiring from more than one drive in the same conduit.

Power cable shield

If the cable shield is used as the sole protective earth (PE) conductor, make sure that its conductivity agrees with the PE conductor requirements.

To effectively suppress radiated and conducted radio-frequency emissions, the cable shield conductivity must be at least 1/10 of the phase conductor conductivity. The requirements are easily met with a copper or aluminum shield. The minimum requirement of the motor cable shield of the drive is shown below. It consists of a concentric layer of copper wires with an open helix of copper tape or copper wire. The better and tighter the shield, the lower the emission level and bearing currents.

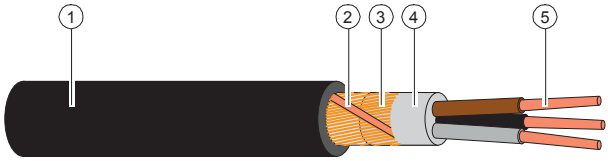

1	Insulation jacket
2	Helix of copper tape or copper wire
3	Copper wire shield
4	Inner insulation
5	Cable core

Grounding requirements

This section gives general requirements for grounding the drive. When you plan the grounding of the drive, obey all the applicable national and local regulations.

The conductivity of the protective earth conductor(s) must be sufficient.

Unless local wiring regulations state otherwise, the cross-sectional area of the protective earth conductor must agree with the conditions that require automatic

disconnection of the supply required in 411.3.2 of IEC 60364-4-41:2005 and be capable of withstanding the prospective fault current during the disconnection time of the protective device. The cross-sectional area of the protective earth conductor must be selected from the table below or calculated according to 543.1 of IEC 60364-5-54.

This table shows the minimum cross-sectional area of the protective earth conductor related to the phase conductor size according to IEC/UL 61800-5-1 when the phase conductor(s) and the protective earth conductor are made of the same metal. If this is not so, the cross-sectional area of the protective earth conductor must be determined in a manner which produces a conductance equivalent to that which results from the application of this table.

Cross-sectional area of the phase conductors S (mm^2)	**Minimum cross-sectional area of the corresponding protective earth conductor S_p (mm^2)**
$S \leq 16$	S [1)]
$16 < S \leq 35$	16
$35 < S$	S/2

1) For the minimum conductor size in IEC installations, refer to Additional grounding requirements – IEC.

If the protective earth conductor is not part of the input power cable or input power cable enclosure, the minimum permitted cross-sectional area is:

- 2.5 mm^2 if the conductor is mechanically protected,
  or
- 4 mm^2 if the conductor is not mechanically protected. If the equipment is cord-connected, the protective earth conductor must be the last conductor to be interrupted if there is a failure in the strain relief mechanism.

Additional grounding requirements – IEC

This section gives grounding requirements according to standard IEC/EN 61800-5-1.

Because the normal touch current of the drive is more than 3.5 mA AC or 10 mA DC:

- the minimum size of the protective earth conductor must comply with the local safety regulations for high protective earth conductor current equipment, and
- you must use one of these connection methods:
  1. a fixed connection and:
     - a protective earth conductor with a minimum cross-sectional area of 10 mm^2 Cu or 16 mm^2 Al (as an alternative when aluminum cables are permitted),
       or

- a second protective earth conductor of the same cross-sectional area as the original protective earth conductor,
  or
- a device that automatically disconnects the supply if the protective earth conductor is damaged.

2. a connection with an industrial connector according to IEC 60309 and a minimum protective earth conductor cross-section of 2.5 mm^2 as part of a multi-conductor power cable. Sufficient strain relief must be provided.

If the protective earth conductor is routed through a plug and socket, or similar means of disconnection, it must not be possible to disconnect it unless power is simultaneously removed.

Note: You can use power cable shields as grounding conductors only when their conductivity is sufficient.

Additional grounding requirements – UL (NEC)

This section gives grounding requirements according to standard UL 61800-5-1.

The protective earth conductor must be sized as specified in Article 250.122 and table 250.122 of the National Electric Code, ANSI/NFPA 70.

For cord-connected equipment, it must not be possible to disconnect the protective earth conductor before power is removed.

Selecting the control cables

Shielding

Only use shielded control cables.

Use a double-shielded twisted pair cable for analog signals. ABB recommends this type of cable also for the pulse encoder signals. Use one individually shielded pair for each signal. Do not use common return for different analog signals.

A double-shielded cable (a) is the best alternative for low-voltage digital signals, but single-shielded (b) twisted pair cable is also acceptable.

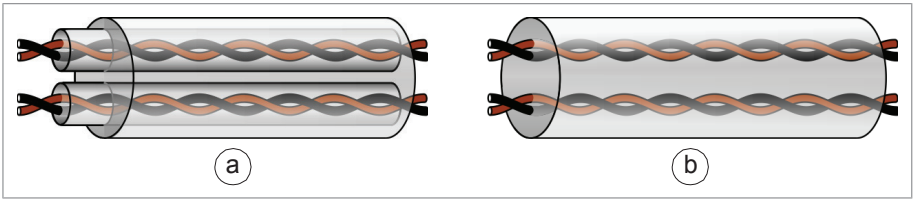

Signals in separate cables

Run analog and digital signals in separate, shielded cables. Do not mix 24 V DC and 115/230 V AC signals in the same cable.

Signals that can be run in the same cable

If their voltage does not exceed 48 V, relay-controlled signals can be run in the same cables as digital input signals. The relay-controlled signals should be run as twisted pairs.

Relay cable

The cable type with braided metallic shield (for example ÖLFLEX by LAPPKABEL, Germany) has been tested and approved by ABB.

Control panel to drive cable

Use EIA-485, Cat 5e (or better) cable with male RJ-45 connectors. The maximum length of the cable is 100 m (328 ft).

PC tool cable

Connect the Drive Composer PC tool to the drive through the USB port of the control panel. Use a USB Type A (PC) - Type Mini-B (control panel) cable. The maximum length of the cable is 3 m (9.8 ft).

Routing the cables

General guidelines – IEC

- Route the motor cable away from other cables. Motor cables of several drives can be run in parallel installed next to each other.
- Install the motor cable, input power cable and control cables on separate trays.
- Avoid long parallel runs of motor cables with other cables.
- Where control cables must cross power cables, make sure that they are arranged at an angle as near to 90 degrees as possible.
- Do not run extra cables through the drive.
- Make sure that the cable trays have good electrical bonding to each other and to the grounding electrodes. Aluminum tray systems can be used to improve local equalizing of potential.

The following figure illustrates the cable routing guidelines with an example drive.

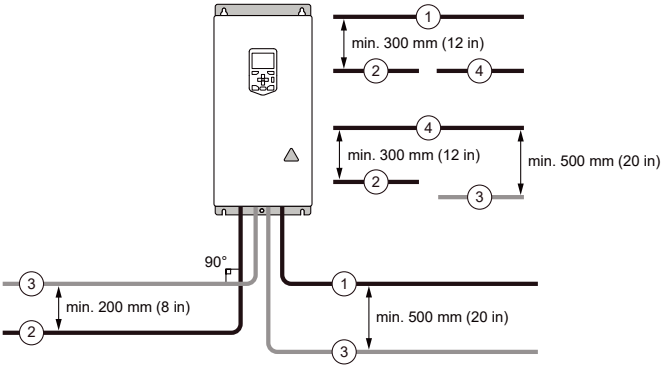

1	Motor cable
2	Input power cable
3	Control cable
4	Brake resistor or chopper cable (if any)

General guidelines – North America

Make sure that the installation is in accordance with national and local codes. Obey these general guidelines:

- Use separate conduits for the input power, motor, brake resistor (optional), and control cabling.
- Use separate conduit for each motor cabling.

The following figure illustrates the cable routing guidelines with an example drive.

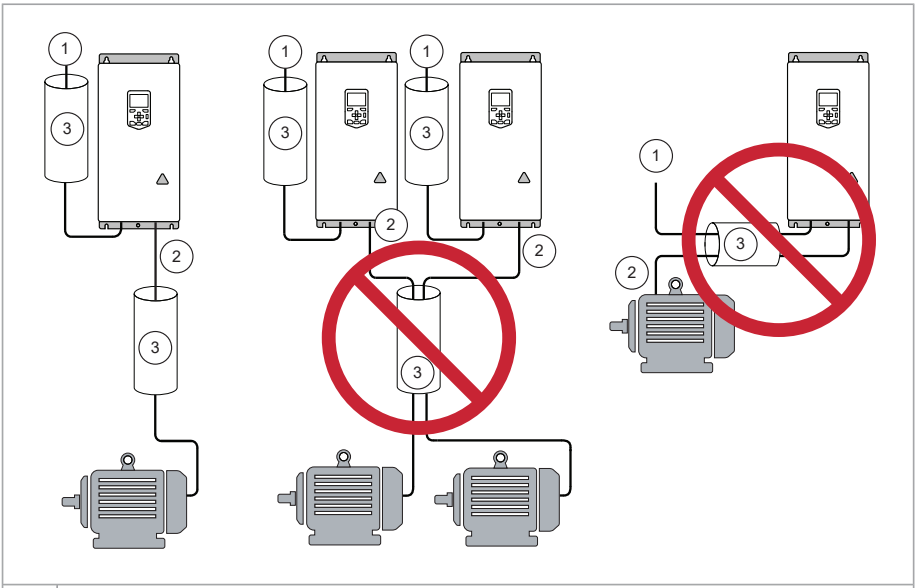

1	Input power cabling
2	Motor cabling
3	Conduit

Continuous motor cable shield/conduit or enclosure for equipment on the motor cable

To minimize the emission level when safety switches, contactors, connection boxes or similar equipment are installed on the motor cable between the drive and the motor:

- Install the equipment in a metal enclosure.
- Use either a symmetrical shielded cable, or install the cabling in a metal conduit.
- Make sure that there is a good and continuous galvanic connection in the shield/conduit between drive and motor.
- Connect the shield/conduit to the protective ground terminal of the drive and the motor.

Separate control cable ducts

Put 24 V DC and 230 V AC (120 V AC) control cables in separate ducts, unless the 24 V DC cable is insulated for 230 V AC (120 V AC) or insulated with an insulation sleeving for 230 V AC (120 V AC).

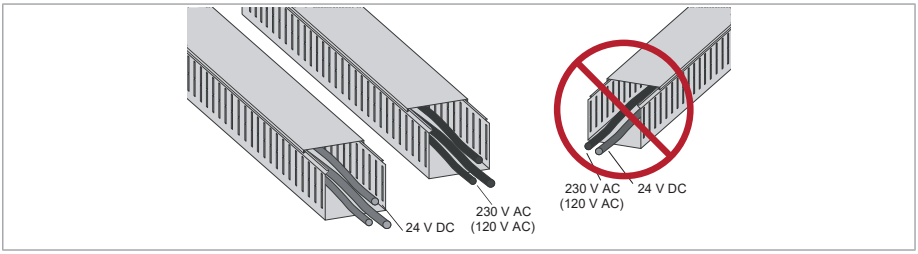

Protecting the drive, input power cable, motor and motor cable in short circuit situations and against thermal overload

Protecting the drive and the input power cable in short-circuits

Protect the drive and the input cable with fuses or a circuit breaker.

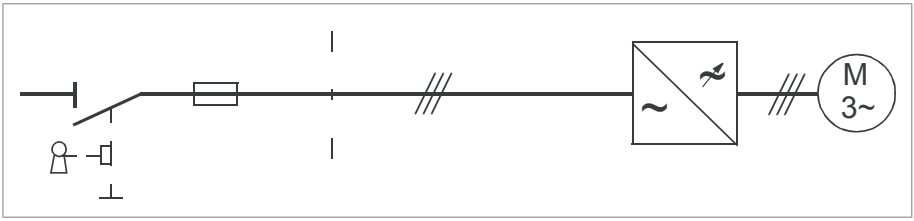

Size the fuses or circuit breakers according to local regulations for the input cable protection. Select the fuses or circuit breakers for the drive according to the instructions given in the technical data. The fuses or circuit breakers for the drive protection will restrict drive damage and prevent damage to adjoining equipment in case of a short-circuit inside the drive.

Note: If the fuses or circuit breakers for the drive protection are placed at the distribution board and the input cable is dimensioned according to the nominal input current of the drive given in the technical data, the fuses or circuit breakers protect also the input cable in short-circuit situations, restrict drive damage and prevent damage to adjoining equipment in case of a short-circuit inside the drive. No separate fuses or circuit breakers for the input cable protection are needed.

WARNING!
Due to the inherent operating principle and construction of circuit breakers, independent of the manufacturer, hot ionized gases can escape from the breaker enclosure in case of a short-circuit. To ensure safe use, pay special attention to the installation and placement of the breakers. Obey the manufacturer's instructions.

Circuit breakers

See section Circuit breakers (IEC) (page 180) or Circuit breakers (UL) (page 181).

Protecting the motor and motor cable in short-circuits

The drive protects the motor cable and motor in a short-circuit situation when:

- the motor cable is sized correctly
- the motor cable type complies with the motor cable selection guidelines by ABB
- the cable length does not exceed the allowed maximum length specified for the drive
- the setting of parameter 99.10 Motor nominal power in the drive is equal with the value given on the motor rating plate.

The electronic power output short-circuit protection circuitry meets the requirements of IEC 60364-4-41 2005/AMD1.

Protecting the motor cables against thermal overload

The drive protects the motor cables against thermal overload when the cables are sized according to the nominal output current of the drive. No additional thermal protection devices are needed.

WARNING!
If the drive is connected to multiple motors, use a separate overload protection for each motor cable and motor. The drive overload protection is tuned for the total motor load. It may not detect an overload in one motor circuit only.

North America: The local code (NEC) requires an overload protection and a short-circuit protection for each motor circuit. Use, for example:

- manual motor protector
- circuit breaker, contactor and overload relay or
- fuses, contactor and overload relay.

Protecting the motor against thermal overload

According to regulations, the motor must be protected against thermal overload and the current must be switched off when overload is detected. The drive includes a motor thermal protection function that protects the motor and switches off the current when necessary. Depending on a drive parameter value, the function either monitors a calculated temperature value (based on a motor thermal model) or an actual temperature indication given by motor temperature sensors.

The motor thermal protection model supports thermal memory retention and speed sensitivity. The user can tune the thermal model further by feeding in additional motor and load data.

The most common temperature sensor types are PTC or Pt100.

For more information, see the firmware manual.

Protecting the motor against overload without thermal model or temperature sensors

Motor overload protection protects the motor against overload without using motor thermal model or temperature sensors.

Motor overload protection is required and specified by multiple standards including the US National Electric Code (NEC) and the common UL/IEC 61800-5-1 standard in conjunction with UL/IEC 60947-4-1. The standards allow for motor overload protection without external temperature sensors.

The protection feature of the drive allows the user to specify the class of operation in the same manner as the overload relays are specified in standards UL/IEC 60947-4-1 and NEMA ICS 2.

The motor overload protection supports thermal memory retention and speed sensitivity.

For more information, see drive firmware manual.

Implementing a motor temperature sensor connection

WARNING!
IEC 61800-5-1 requires double or reinforced insulation between live parts and accessible parts when:

- the accessible parts are not conductive, or
- the accessible parts are conductive, but not connected to the protective earth.

Obey this requirement when you plan the connection of the motor temperature sensor to the drive.

You have these implementation alternatives:

1. If there is double or reinforced insulation between the sensor and the live parts of the motor: You can connect the sensor directly to the analog/digital input(s) of the drive. See the control cable connection instructions. Make sure that the voltage does not exceed the maximum allowed voltage over the sensor.
2. If there is basic insulation between the sensor and the live parts of the motor, or if the insulation type is not known, you can connect the sensor to the drive via an option module. The sensor and the module must form a double or reinforced insulation between the motor live parts and the drive control unit. See Connecting a motor temperature sensor to the drive through an option module (page 79). Make sure that the voltage does not exceed the maximum allowed voltage over the sensor.
3. If there is basic insulation between the sensor and the live parts of the motor, or if the insulation type is not known: You can connect a sensor to a digital input of the drive via an external relay. The sensor and the relay must form a double or reinforced insulation between the motor's live parts and the digital input of the drive. Make sure that the voltage does not exceed the maximum allowed voltage over the sensor.

Connecting a motor temperature sensor to the drive through an option module

This table shows:

- option module types that you can use for the motor temperature sensor connection
- insulation or isolation level that each option module forms between its temperature sensor connector and other connectors
- temperature sensor types that you can connect to each option module
- temperature sensor insulation requirement in order to form, together with the insulation of the option module, a reinforced insulation between the motor live parts and the drive control unit.

Option module		Temperature sensor type			Temperature sensor insulation requirement
Type	**Insulation/Isolation**	**PTC**	**KTY**	**Pt100, Pt1000**	
FIO-11	Galvanic isolation between sensor connector and drive control unit connector. No isolation between sensor connector and other I/O connectors.	x	x	x	Reinforced insulation

Option module		Temperature sensor type			Temperature sensor insulation requirement
Type	**Insulation/Isolation**	**PTC**	**KTY**	**Pt100, Pt1000**	
FIO-21	Galvanic isolation between sensor connector and other connectors (including drive control unit connector).	x	x	x	Reinforced insulation
FEN-01	Galvanic isolation between sensor connector and drive control unit connector. No isolation between sensor connector and TTL encoder emulation output.	x	-	-	Reinforced insulation
FEN-11	Galvanic isolation between sensor connector and drive control unit connector. No isolation between sensor connector and TTL encoder emulation output.	x	x	-	Reinforced insulation
FEN-21	Galvanic isolation between sensor connector and drive control unit connector. No isolation between sensor connector and TTL encoder emulation output.	x	x	-	Reinforced insulation
FEN-31	Galvanic isolation between sensor connector and drive control unit connector. No isolation between sensor connector and other connectors.	x	x	-	Reinforced insulation
FAIO-01	Basic insulation between sensor connector and drive control unit connector. No insulation between sensor connector and other I/O connectors.	x	x	x	Reinforced or basic insulation. With basic insulation, the other I/O connectors of the option module must be kept disconnected.
FPTC-01/02 [1)]	Reinforced insulation between sensor connector and other connectors (including drive control unit connector).	x	-	-	No special requirement

1) Suitable for use in safety functions (SIL2 / PL c rated).

For more information, refer to the applicable option module user's manual.

Protecting the drive against ground faults

The drive is equipped with an internal ground fault protective function to protect the unit against ground faults in the motor and motor cable. This function is not a personnel safety or a fire protection feature. See the firmware manual for more information.

Residual current device compatibility

The drive is suitable for use with residual current devices of Type B.

Note: As standard, the drive contains capacitors connected between the main circuit and the frame. These capacitors and long motor cables increase the ground leakage current and may cause nuisance faults in residual current devices.

Implementing the emergency stop function

For safety reasons, install the emergency stop devices at each operator control station and at other operating stations where the emergency stop may be needed. Implement the emergency stop according to relevant standards.

Note: You can use the Safe torque off function of the drive to implement the Emergency stop function.

Implementing the Safe torque off function

See The Safe torque off function (page 215).

Implementing the power loss ride-through function

If the incoming supply voltage is cut off, the drive will continue to operate by utilizing the kinetic energy of the rotating motor. The drive will be fully operational as long as the motor rotates and generates energy to the drive.

If you equip the drive with a main contactor or breaker, make sure that it restores the drive input power after a short break. The contactor must either re-connect after the break automatically, or remain closed over the break. Depending on the contactor control circuit design, this can require an additional hold circuit, uninterruptible auxiliary power supply or auxiliary power supply buffering.

Note: If the power loss lasts so long that the drive trips on undervoltage, a fault reset and a fresh start command is required to continue operation.

Implement the power-loss ride-through function as follows:

1. Enable the power-loss ride-through function of the drive (parameter 30.31).

2. If the installation is equipped with a main contactor, prevent its tripping at the input power break. For example, use a time delay relay (hold) in the contactor control circuit.
3. Enable the automatic restart of the motor after a short power supply break:
   - Set the start mode to automatic (parameter 21.01 or 21.19, depending on the motor control mode being used).
   - Define the automatic restart time (parameter 21.18).

WARNING!
Make sure that a flying restart of the motor will not cause any danger. If you are in doubt, do not implement the power loss ride-through function.

Implementing the functions provided by the FSO safety functions module

You can order the drive with an FSO-12 safety functions module (option +Q973) or FSO-21 safety functions module (option +Q972). An FSO module enables the implementation of functions such as Safe brake control (SBC), Safe stop 1 (SS1), Safe stop emergency (SSE), Safely limited speed (SLS) and Safe maximum speed (SMS).

The settings of the FSO module have default values when delivered from the factory. The wiring of the external safety circuit and configuration of the FSO module are the responsibility of the user.

The FSO module reserves the standard Safe torque off (STO) connection of the drive control unit. STO can still be utilized by other safety circuits through the FSO module.

See the appropriate manual for more information.

Name	Code
FSO-12 safety functions module user's manual	3AXD50000015612
FSO-21 safety functions module user's manual	3AXD50000015614

Using power factor compensation capacitors with the drive

Power factor compensation is not needed with AC drives. However, if a drive is to be connected in a system with compensation capacitors installed, note the following restrictions.

WARNING!
Do not connect power factor compensation capacitors or harmonic filters to the motor cables (between the drive and the motor). They are not meant to be used with AC drives and can cause permanent damage to the drive or themselves.

If there are power factor compensation capacitors in parallel with the input of the drive:

1. Do not connect a high-power capacitor to the power line while the drive is connected. The connection will cause voltage transients that may trip or even damage the drive.
2. If capacitor load is increased/decreased step by step when the AC drive is connected to the power line, make sure that the connection steps are low enough not to cause voltage transients that would trip the drive.
3. Make sure that the power factor compensation unit is suitable for use in systems with AC drives, ie, harmonic generating loads. In such systems, the compensation unit should typically be equipped with a blocking reactor or harmonic filter.

Using a safety switch between the drive and the motor

ABB recommends to install a safety switch between the permanent magnet motor and the drive output. The switch is needed to isolate the motor from the drive during maintenance work on the drive.

Implementing an ATEX-certified motor thermal protection

With option +Q971, the drive provides ATEX-certified safe motor disconnection without contactor using the drive Safe torque off function. To implement the thermal protection of a motor in explosive atmosphere (Ex motor), you must also:

- use an ATEX-certified Ex motor
- order an ATEX-certified thermistor protection module for the drive (option +L537), or acquire and install an ATEX-compliant protection relay
- do the necessary connections.

For more information, see:

User's manual	Manual code (English)
ATEX-certified Safe disconnection function, Ex II (2) GD for ACS880 drives (+Q971) application guide	3AUA0000132231

User's manual	Manual code (English)
FPTC-02 ATEX-certified thermistor protection module, Ex II (2) GD (option +L537+Q971) for ACS880 drives user's manual	3AXD50000027782

Controlling a contactor between drive and motor

The control of the output contactor depends on how you use the drive, that is, which motor control mode and which motor stop mode you select.

If you have the DTC motor control mode and the motor ramp stop mode selected, use this operation sequence to open the contactor:

1. Give a stop command to the drive.
2. Wait until the drive decelerates the motor to zero speed.
3. Open the contactor.

If you have the DTC motor control mode and the motor coast stop, or scalar control mode selected, open the contactor as follows:

1. Give a stop command to the drive.
2. Open the contactor.

WARNING!
When the DTC motor control mode is in use, never open the output contactor while the drive controls the motor. The DTC motor control operates extremely fast, much faster than it takes for the contactor to open its contacts. When the contactor starts opening while the drive controls the motor, the DTC control will try to maintain the load current by immediately increasing the drive output voltage to the maximum. This will damage, or even burn, the contactor completely.

Implementing a bypass connection

If bypassing is required, employ mechanically or electrically interlocked contactors between the motor and the drive and between the motor and the power line. Make sure with interlocking that the contactors cannot be closed simultaneously. The installation must be clearly marked as defined in IEC/EN/UL 61800-5-1, subclause 6.5.3, for example, “THIS MACHINE STARTS AUTOMATICALLY”.

WARNING!
Never connect the drive output to the electrical power network. The connection may damage the drive.

Protecting the contacts of relay outputs

Inductive loads (relays, contactors, motors) cause voltage transients when switched off.

The relay contacts on the drive control unit are protected with varistors (250 V) against overvoltage peaks. In spite of this, it is highly recommended that inductive loads are equipped with noise attenuating circuits (varistors, RC filters [AC] or diodes [DC]) to minimize the EMC emission at switch-off. If not suppressed, the disturbances may connect capacitively or inductively to other conductors in the control cable and form a risk of malfunction in other parts of the system.

Install the protective component as close to the inductive load as possible. Do not install protective components at the relay outputs.

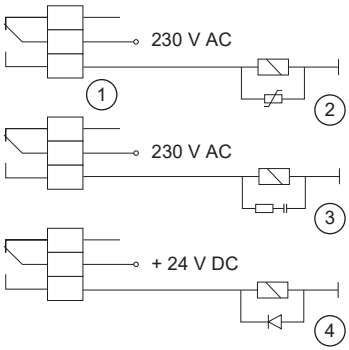

1	Relay output
2	Varistor
3	RC filter
4	Diode

6

Electrical installation – IEC

Contents of this chapter

This chapter contains instructions on the wiring of the drive.

Safety

WARNING!
If you are not a qualified electrical professional, do not do installation or maintenance work. Obey the safety instructions of the drive. If you ignore them, injury or death, or damage to the equipment can occur.

Required tools

To do the electrical installation, you need these tools:

- wire stripper
- screwdriver set (Torx, flat and/or Phillips, as appropriate)
- torque wrench.

Grounding the motor cable shield at the motor end

For minimum radio-frequency interference, ground the cable shield 360 degrees at the cable entry of the motor terminal box.

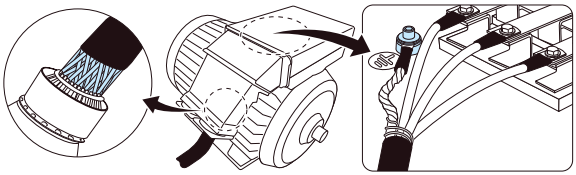

Measuring the insulation

Measuring the insulation resistance of the drive

WARNING!
Do not do any voltage withstand or insulation resistance tests on any part of the drive as testing can damage the drive. Every drive has been tested for insulation between the main circuit and the chassis at the factory. Also, there are voltage-limiting circuits inside the drive which cut down the testing voltage automatically.

Measuring the insulation resistance of the input power cable

Before you connect the input power cable to the drive, measure its insulation resistance according to local regulations.

Measuring the insulation resistance of the motor and motor cable

WARNING!
Obey the safety instructions of the drive. If you ignore them, injury or death, or damage to the equipment can occur. If you are not a qualified electrical professional, do not do installation, commissioning or maintenance work.

1. Do the steps in section Electrical safety precautions (page 18) before you start the work.
2. Make sure that the motor cable is disconnected from the drive output terminals.
3. Measure the insulation resistance between each phase conductor and the protective earth conductor. Use a measuring voltage of 1000 V DC. The insulation resistance of an ABB motor must be more than 100 Mohm (reference value at 25 °C [77 °F]). For the insulation resistance of other motors, refer to the manufacturer's instructions.

   Note: Moisture inside the motor reduces the insulation resistance. If you think that there is moisture in the motor, dry the motor and do the measurement again.

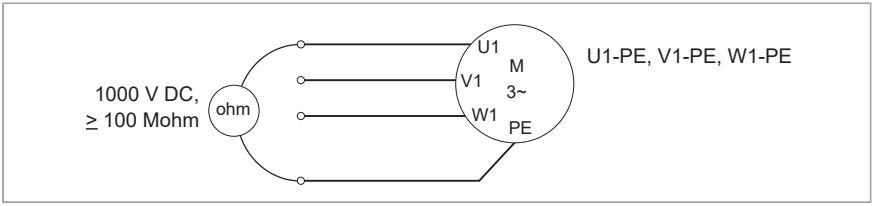

Grounding system compatibility check

The standard drive can be installed to a symmetrically grounded TN-S system. If you install the drive to another system, you may need to disconnect the EMC filter and ground-to-phase varistor. See ACS880 frames R1 to R11 EMC filter and ground-to-phase varistor disconnecting instructions (3AUA0000125152 [English]).

WARNING! Do not install the drive with EMC filter options +E200 or +E202 connected to a system that the filter is not suitable for. This can cause danger, or damage the drive.

WARNING! Do not install the drive with the ground-to-phase varistor connected to a system that the varistor is not suitable for. If you do, the varistor circuit can be damaged.

Connecting the power cables

Connection diagram

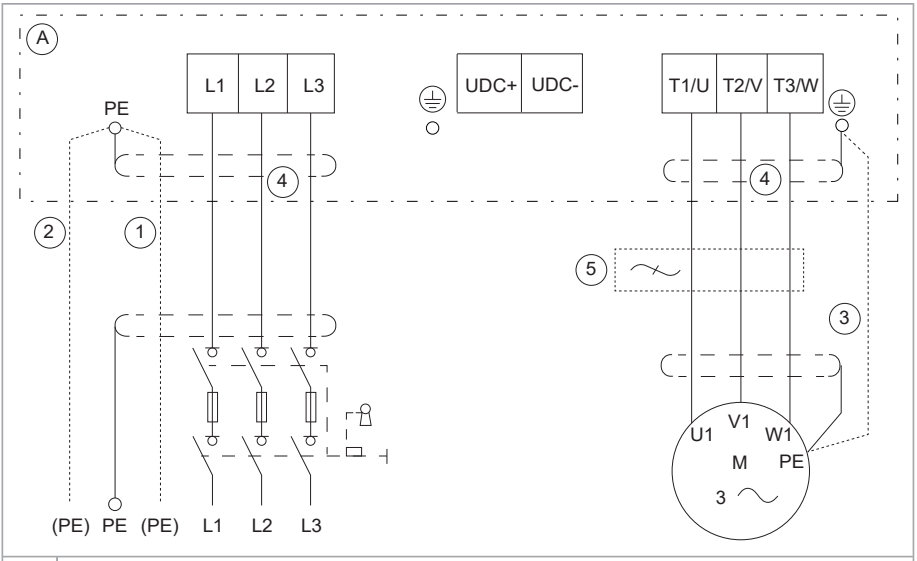

A	Drive
1	Two protective earth (ground) conductors. Drive safety standard IEC/ EN 61800-5-1 requires two PE conductors, if the cross-sectional area of the PE conductor is less than 10mm2 Cu or 16 mm2 Al. For example, you can use the cable shield in addition to the fourth conductor.
2	Use a separate grounding cable or a cable with a separate PE conductor for the line side, if the conductivity of the fourth conductor or shield does not meet the requirements for the PE conductor.
3	Use a separate grounding cable for the motor side, if the conductivity of the shield is not sufficient, or if there is no symmetrically constructed PE conductor in the cable.
4	ABB requires 360° grounding of the cable shield for the motor cable. ABB also recommends it for the input power cable.
5	If necessary, install an external filter (du/dt, common mode, or sine filter). See Common mode, du/dt and sine filters (page 237).

Note: If there is a symmetrically constructed grounding conductor on the motor cable in addition to the conductive shield, connect the grounding conductor to the grounding terminal at the drive and motor ends.

Do not use an asymmetrically constructed motor cable for motors above 30 kW. See section Selecting the power cables (page 66).

Connecting its fourth conductor at the motor end increases bearing currents and causes extra wear.

Connection procedure

The procedure of connecting the power cables to the standard drive is described below. For the procedure with UK gland plate (option +H358), see also ACS880-11, ACS880-31, ACH580-31 and ACQ580-31 UK gland plate (+H358) installation guide (3AXD50000110711 [English]).

1. For frame R3: To remove the front cover, lift the cover from the bottom outwards (1a) and then up (1b).

R3 – IP21	R3 – IP55
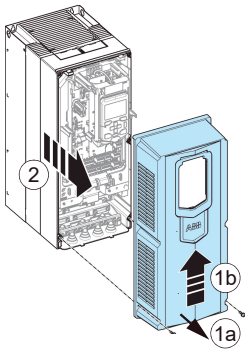	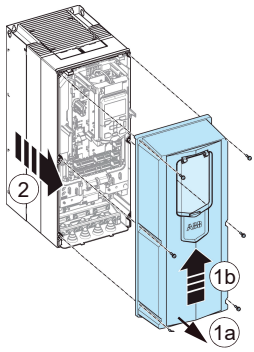

For frame R6 and R8 (IP21): Remove the cover as follows:
- Release the retaining clip with a screwdriver.
- Remove the middle front cover.
- Remove the lower front cover.

For frame R6 and R8 (IP55): Remove the covers as follows:
- Loosen the screws that attach the front cover to the frame.
- Remove the cover.
- For frame R8, disconnect the power supply wire of the auxiliary cooling fan.

R6, R8 – IP21

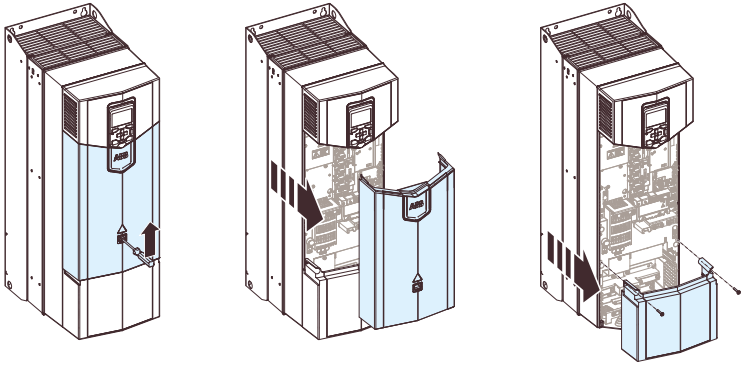

R6, R8 – IP55

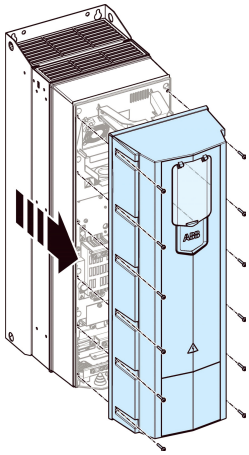

2. Attach the residual voltage warning sticker in the local language.

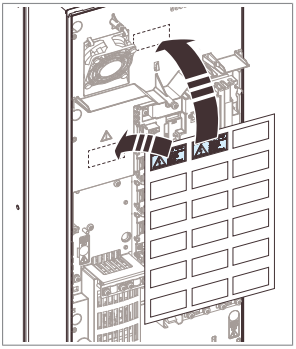

3. For frames R6 and R8: Remove the shroud on the power cable terminals.

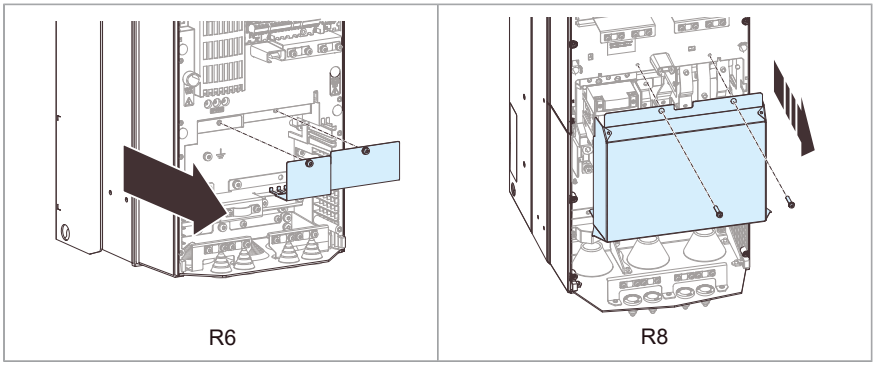

4. For frame R6: If you need more working space, unscrew the screw and lift the EMC plate off. Install the EMC plate again after you have installed the motor and input power cables.

For frame R8: Remove the EMC cover plates (4a). Remove the EMC side plates (4b).

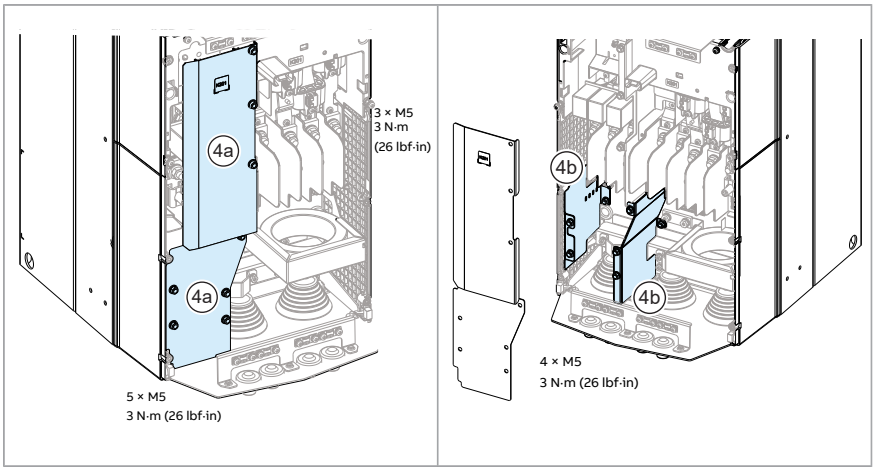

5. For frame R8: For easier installation, you can remove the side plates.

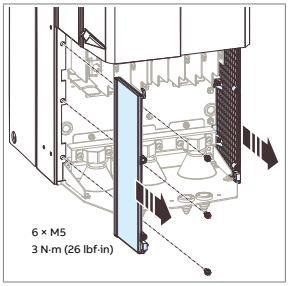

6. Remove the rubber grommets from the cable entry plate for the cables you want to install. Insert the grommets pointing down in the unused cable entry plate holes.

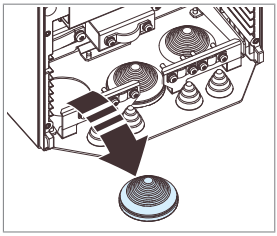

7. Cut an adequate hole into the rubber grommet. Slide the grommet onto the cable.

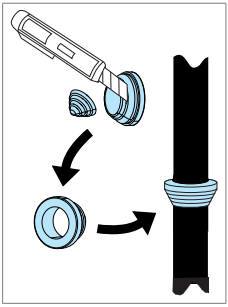

8. Prepare the ends of the cables as shown in the figure. Two different motor cable types are shown. If you use aluminum cables, put grease onto the peeled aluminum cable before you connect it to the drive.

   Note: The bare shield will be grounded 360°.

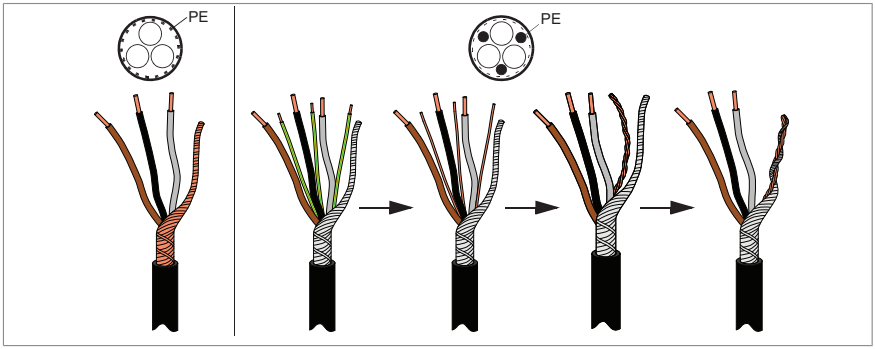

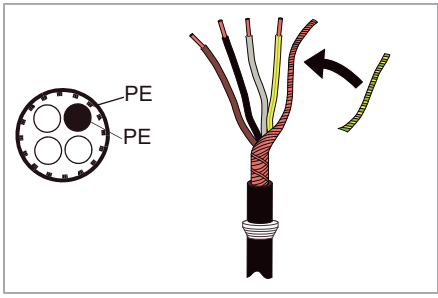

Only allowed for input cabling with phase conductor cross-section less than 10 mm^2 (8 AWG)

9. Put the cable through the hole of the cable entry plate and attach the grommet to the hole.

10. Connect the cables:
    - Ground the shield 360° by tightening the clamp of the power cable grounding shelf onto the stripped part of the cable.
    - Connect the twisted shield of the cable to the grounding terminal.
    - Connect the additional PE conductors (if any).
    - For frame R8 (option +E208): Install the common mode filter. For instructions, see Common mode filter kit for ACS880-01 frame R7, and for ACS880-11, ACS880-31, ACH580-31 and ACQ580-31 frame R8 installation instructions (3AXD50000015179 [English]).
    - Connect the phase conductors of the motor cable to the T1/U, T2/V and T3/W terminals and the phase conductors of the input cable to the L1, L2 and L3 terminals.
    - Tighten the screws to the torque given in the installation drawing below.

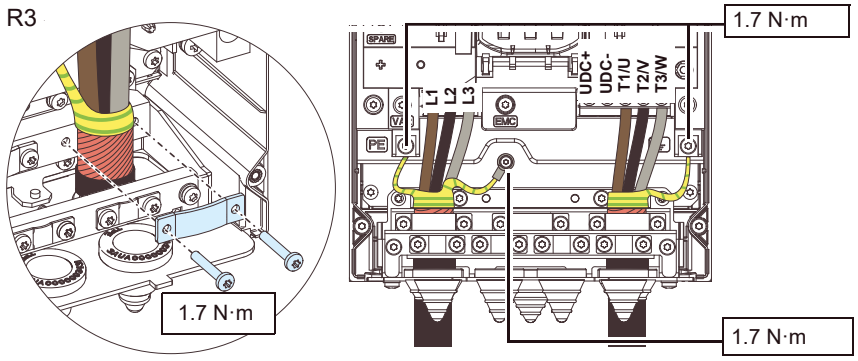

L1, L2, L3, T1/U, T2/V, T3/W: 1.7 N·m

R6

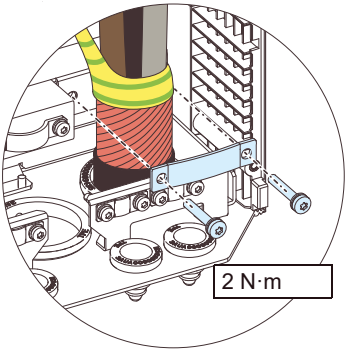

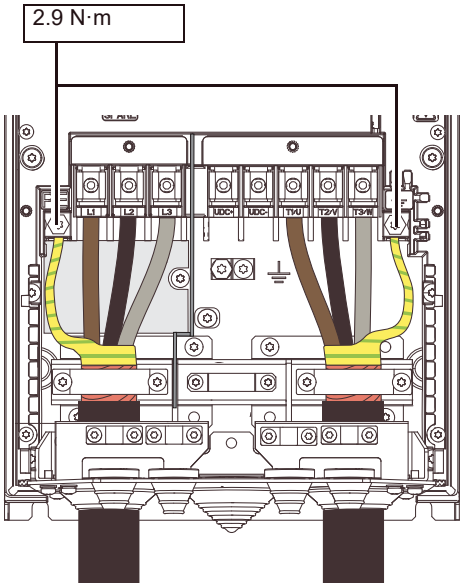

R8

L1, L2, L3: 30 N·m
T1/U, T2/V, T3/W: 30 N·m

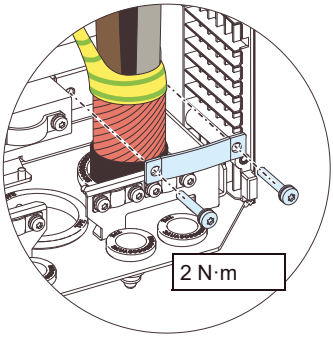

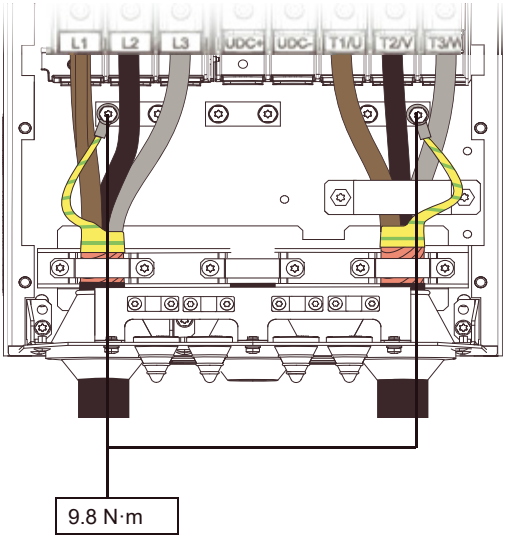

Note: For frame R8: Install the side plates if removed.

Note: For frame R8: The power cable connectors can be detached. For the instructions, see section R8 power cable connection if you detach the cable connectors (page 98).

11. For frame R8: Install the EMC plates in reverse order. See step 4.
12. For frame R6 types bigger than -040A-x: Cut tabs in the shroud for the installed cables.
13. Install the shroud onto the power cable connection terminals.

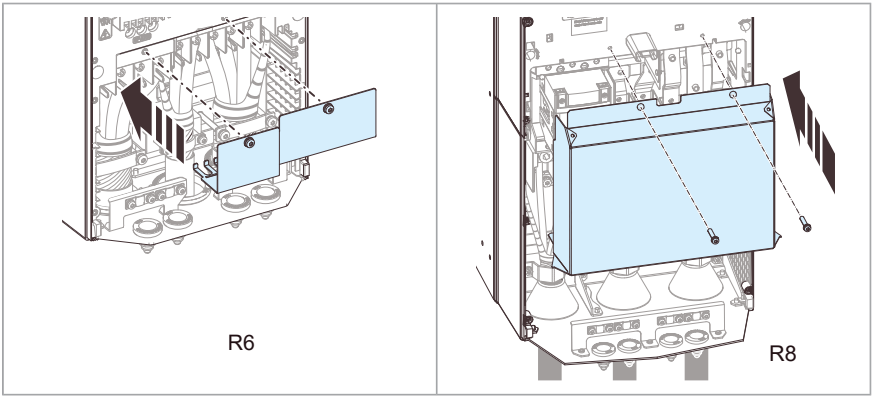

R8 power cable connection if you detach the cable connectors

The power cable connectors of frame R8 are detachable. If you detach them, you can connect the cables with cable lugs as follows:

- Remove the nut that attaches the connector to the terminal post and remove the connector.
- Alternative 1: Put the conductor to the connector. Tighten to a torque of 30 N·m. Put the connector back onto the post. Tighten the connector to a torque of 16 N·m.
- Alternative 2: Attach a cable lug to the conductor. Put the cable lug onto the post. Tighten the nut to a torque of 16 N·m.

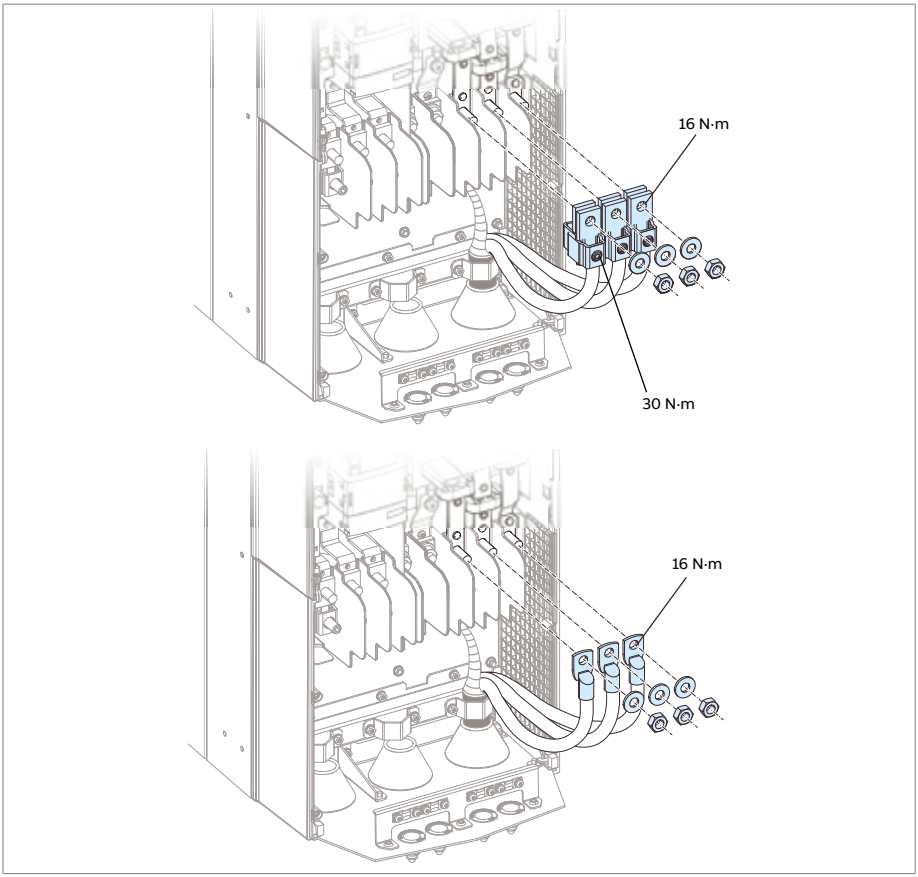

Connecting the control cables

Connection diagram

See section Default I/O diagram of the drive control unit (ZCU-1x) (page 129) for the default I/O connections of the drive.

Connection procedure

WARNING!
Obey the safety instructions of the drive. If you ignore them, injury or death, or damage to the equipment can occur. If you are not a qualified electrical professional, do not do installation, commissioning or maintenance work.

1. Stop the drive and do the steps in section Electrical safety precautions (page 18) before you start the work.
2. Remove the front cover(s) if not already removed.
3. For frame R3: Pull the control panel holder up.

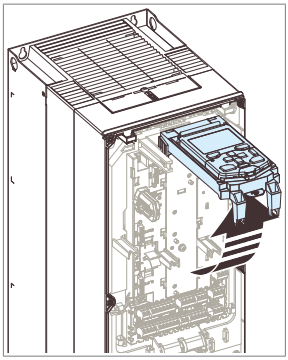

4. Cut an adequate hole into the rubber grommet and slide the grommet onto the cable. Slide the cable through a hole in the bottom plate and attach the grommet to the hole.
5. Route the cable as shown in the figures below.
6. Ground the outer shield of the cable 360 degrees under the grounding clamp at the cable entry. Keep the cable unstripped as close to the terminals of the control unit as possible. Secure the cables inside the drive mechanically.
7. Frame R3: Ground the pair cable shields and grounding wires under the grounding clamp screw at the cable entry.
   Frame R6 and R8: Ground the pair cable shields and grounding wire under the clamp screw below the control unit.
8. Connect the conductors to the appropriate terminals of the control unit and tighten to 0.5 … 0.6 N·m. See Default I/O diagram of the drive control unit (ZCU-1x) (page 129).

Note:

- Leave the other ends of the control cable shields unconnected or ground them indirectly through a high-frequency capacitor with a few nanofarads, eg, 3.3 nF / 630 V. The shield can also be grounded directly at both ends if they are in the same ground line with no significant voltage drop between the end points.
- Keep any signal wire pairs twisted as close to the terminals as possible. Twisting the wire with its return wire reduces disturbances caused by inductive coupling.

Example wirings are shown below.

R6

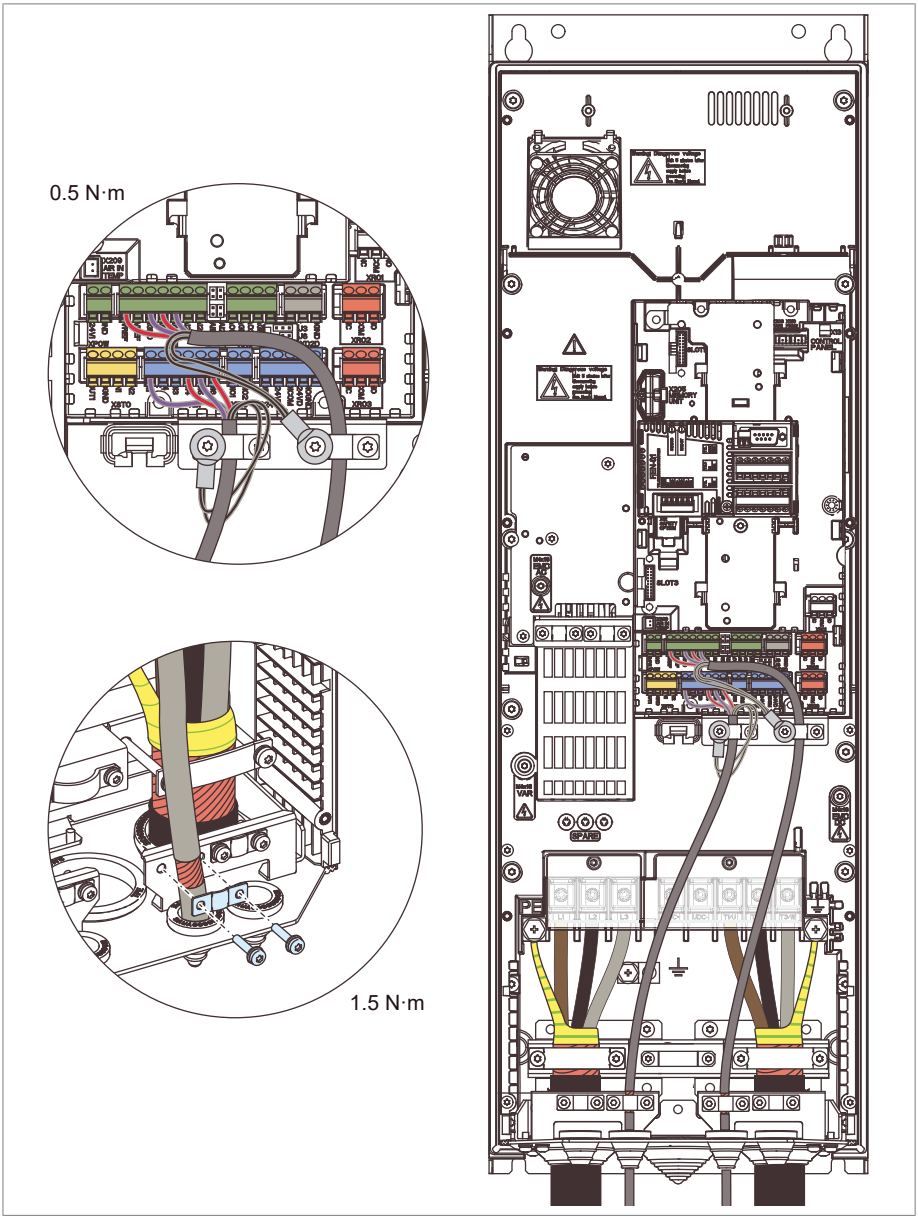

R8

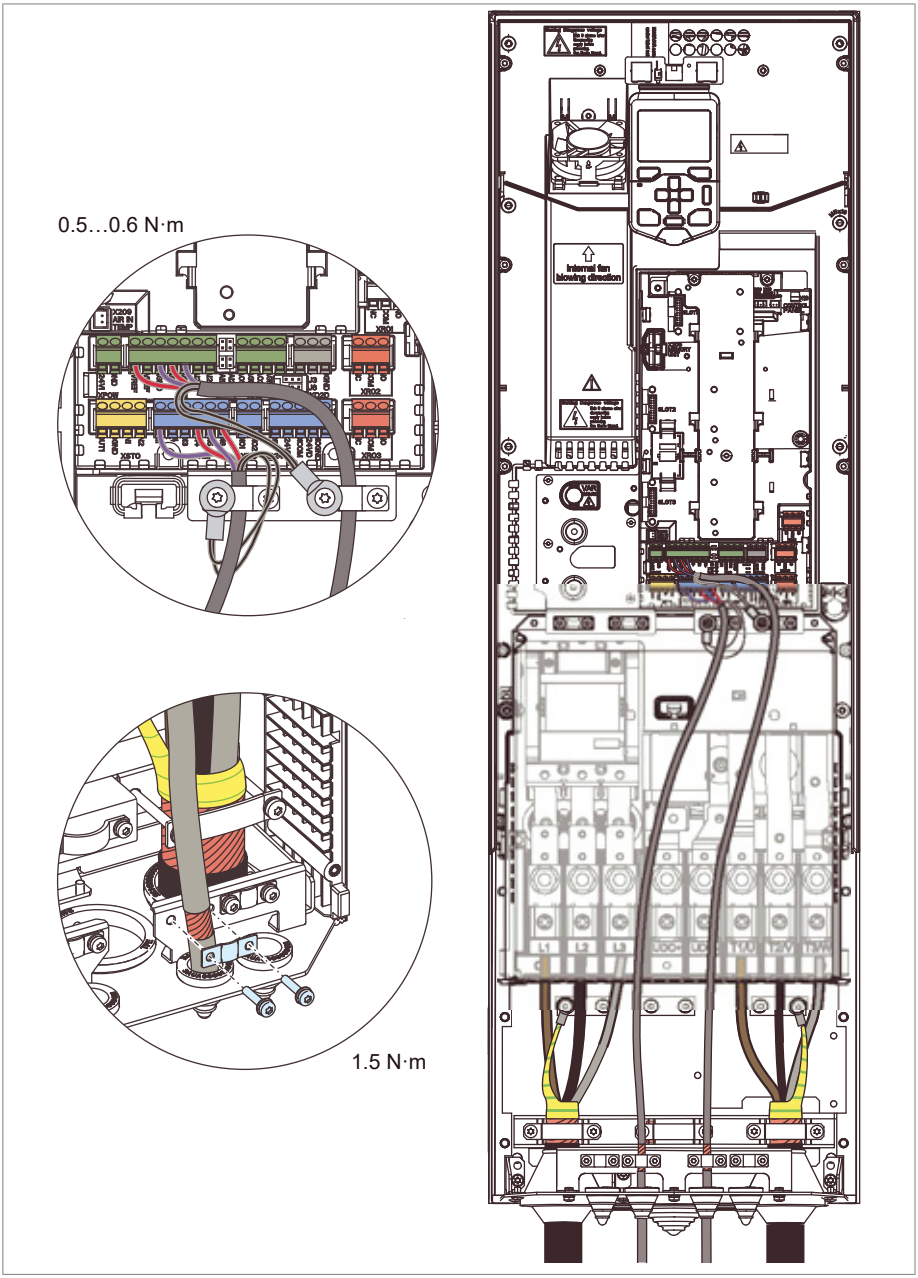

Installing option modules

Mechanical installation of option modules

See section Overview of power and control connections (page 33) for the available slots for each module. Install the option modules as follows:

WARNING!
Obey the safety instructions of the drive. If you ignore them, injury or death, or damage to the equipment can occur.

1. Stop the drive and do the steps in section Electrical safety precautions (page 18) before you start the work.
2. Remove the front cover(s) if not already removed.
3. For frame R3: Pull the control panel holder up.

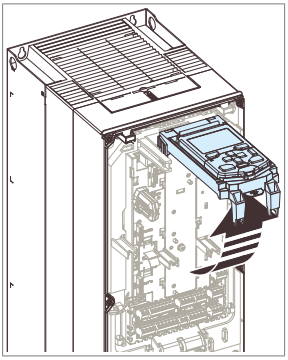

4. Insert the module carefully into its position on the control unit.
5. Tighten the mounting screw torque of 0.8 N·m.

Note: The screws tightens the connections and grounds the module. It is essential for fulfilling the EMC requirements and for proper operation of the module.

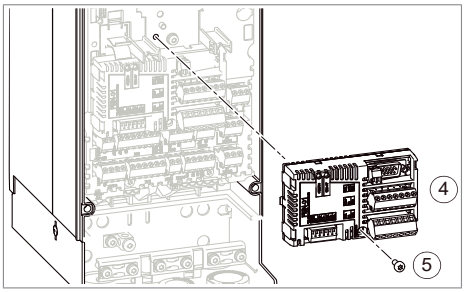

Wiring option modules

See the appropriate option module manual for specific installation and wiring instructions. See section Connection procedure (page 99) for the routing of the cables.

Installation of safety functions modules

The safety functions module can be mounted onto Slot 2 on the control unit or, in frames R6 and R8, also next to the control unit.

Installation procedure into Slot 2

WARNING!
Obey the safety instructions of the drive. If you ignore them, injury or death, or damage to the equipment can occur.

1. Stop the drive and do the steps in section Electrical safety precautions (page 18) before you start the work.
2. Remove the front cover.
3. For frame R3: Pull the control panel stand up.
4. Insert the module carefully into its position on the control unit.
5. Attach the module with four screws.
6. Tighten the grounding screw of the electronics to 0.8 N·m.

   Note: The grounding screw is essential for fulfilling the EMC requirements and for proper operation of the module.

7. Connect the flat cable to connector X110 on the module and to connector X12 on the drive control unit.
8. Connect the Safe torque off (STO) cable to connector X111 on the module and to connector XSTO on the drive module control unit as shown in Wiring (page 217).
9. Connect the external +24 V power supply cable to connector X112.
10. Connect the other wires as shown in FSO-12 safety functions module user's manual (3AXD50000015612[English]) or in FSO-21 safety functions module user's manual (3AXD50000015614 [English]).

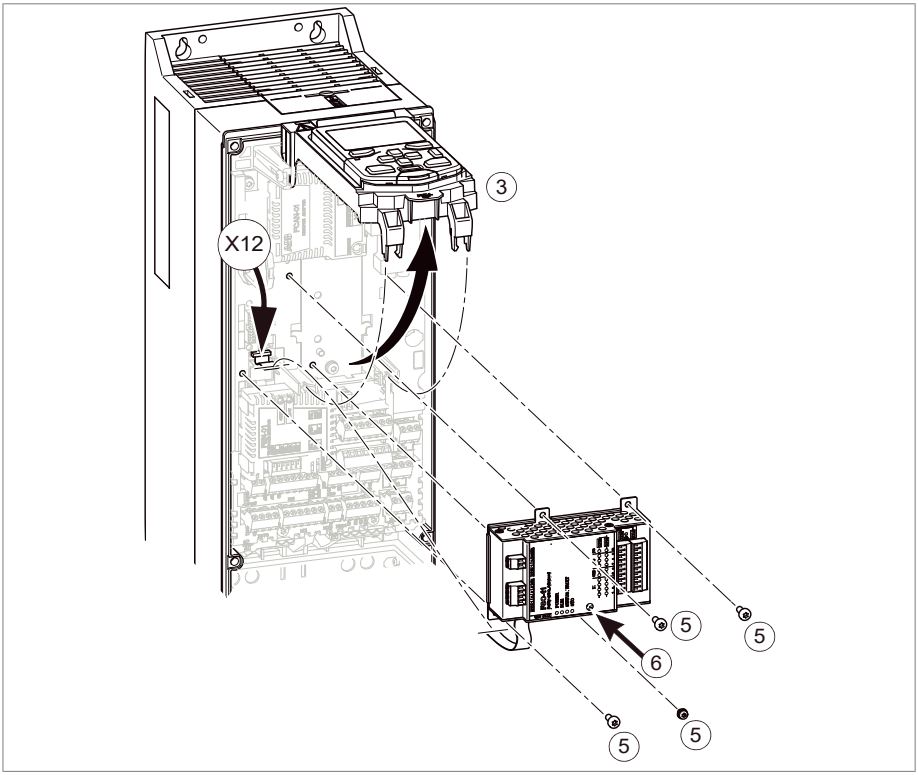

Installation next to the control unit on frames R6 and R8

WARNING!
Obey the safety instructions of the drive. If you ignore them, injury or death, or damage to the equipment can occur.

1. Stop the drive and do the steps in section Electrical safety precautions (page 18).

2. Remove the front cover.
3. Insert the module carefully into its position.
4. Attach the module with four screws.
5. Tighten the grounding screw of the electronics to 0.8 N·m.

   Note: Correct installation of the grounding screw (a) is essential for fulfilling the EMC requirements and for proper operation of the module.

6. Connect the flat cable to connector X110 on the module and to connector X12 on the drive control unit.
7. Connect the Safe torque off (STO) cable to connector X111 on the module and to connector XSTO on the drive module control unit as shown in Wiring (page 217).
8. Connect the external +24 V power supply cable to connector X112.
9. Connect the other wires as shown in FSO-12 safety functions module user's manual (3AXD50000015612[English]) or in FSO-21 safety functions module user's manual (3AXD50000015614 [English]).

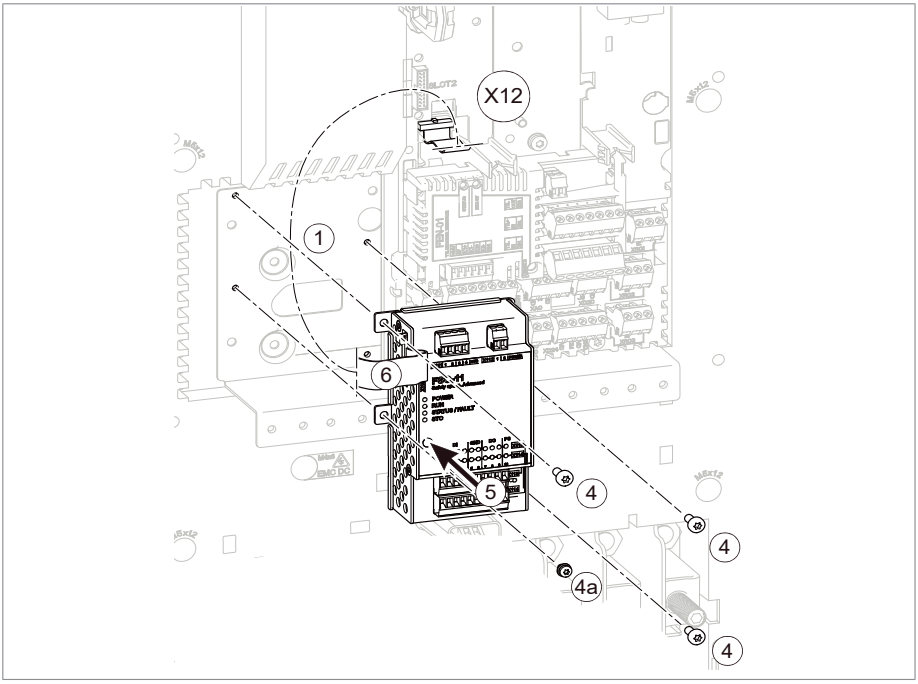

Reinstalling cover(s)

After installation, reinstall the covers. For IP55 (UL Type 12) frame R8, connect the cooling fan power supply wire, see section Replacing the auxiliary cooling fan in the IP55 (UL Type 12) cover, frame R8 (page 155).

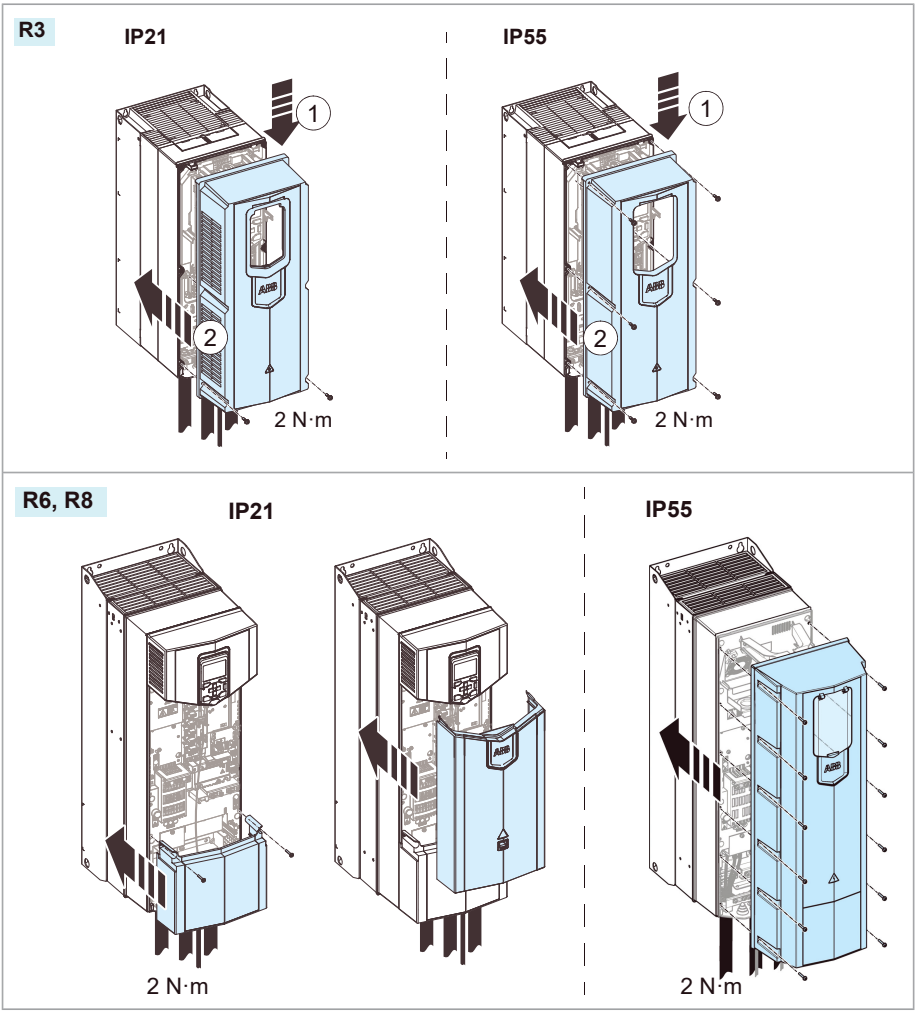

Connecting a PC

WARNING!
Do not connect the PC directly to the control panel connector of the control unit as this can cause damage.

A PC (with, for example, the Drive composer PC tool) can be connected as follows:

1. Connect a ACS-AP-… or ACH-AP-… control panel to the unit either
   - by inserting the control panel into the panel holder or platform, or
   - by using an Ethernet (eg, Cat 5e) networking cable.
2. Remove the USB connector cover on the front of the control panel.
3. Connect an USB cable (Type A to Type Mini-B) between the USB connector on the control panel (3a) and a free USB port on the PC (3b).
4. The panel will display an indication whenever the connection is active.
5. See the documentation of the PC tool for setup instructions.

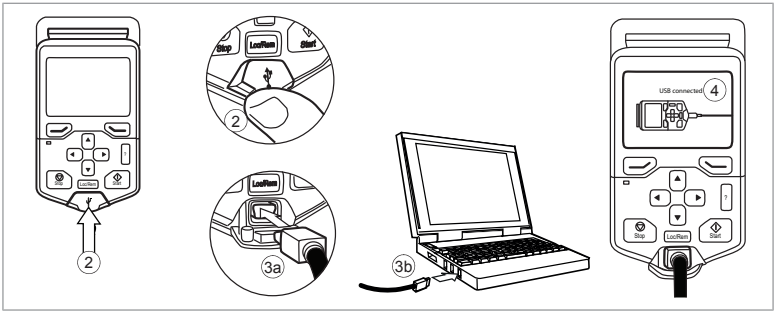

Panel bus (Control of several units from one control panel)

One control panel (or PC) can be used to control several drives (or inverter units, supply units etc.) by constructing a panel bus. This is done by daisy-chaining the panel connections of the drives. Some drives have the necessary (twin) panel connectors in the control panel holder; those that do not require the installation of an FDPI-02 module (available separately). For further information, see the hardware description and FDPI-02 diagnostics and panel interface user's manual (3AUA0000113618 [English]).

The maximum allowed length of the cable chain is 100 m (328 ft).

1. Connect the panel to one drive using an Ethernet (for example Cat 5e) cable.
   - Use Menu - Settings - Edit texts - Drive to give a descriptive name to the drive
   - Use parameter 49.01* to assign the drive with a unique node ID number
   - Set other parameters in group 49* if necessary

- Use parameter 49.06* to validate any changes.

*The parameter group is 149 with supply (line-side), brake or DC/DC converter units.

Repeat the above for each drive.

2. With the panel connected to one unit, link the units using Ethernet cables.
3. Switch on the bus termination on the drive that is farthest from the control panel in the chain.
   - With drives that have the panel mounted on the front cover, move the terminating switch into the outer position.
   - With an FDPI-02 module, move termination switch S2 into the TERMINATED position.

   Make sure that bus termination is off on all other drives.
4. On the control panel, switch on the panel bus functionality (Options - Select drive - Panel bus). The drive to be controlled can now be selected from the list under Options - Select drive.

If a PC is connected to the control panel, the drives on the panel bus are automatically displayed in the Drive Composer PC tool.

With twin connectors in the control panel holder:

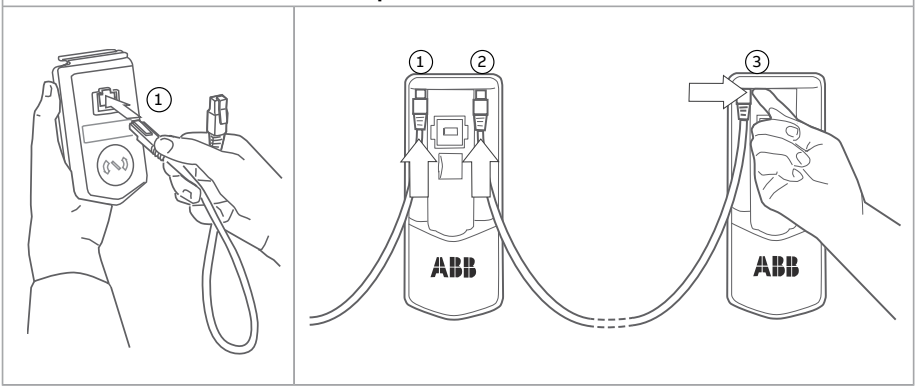

With FDPI-02 modules:

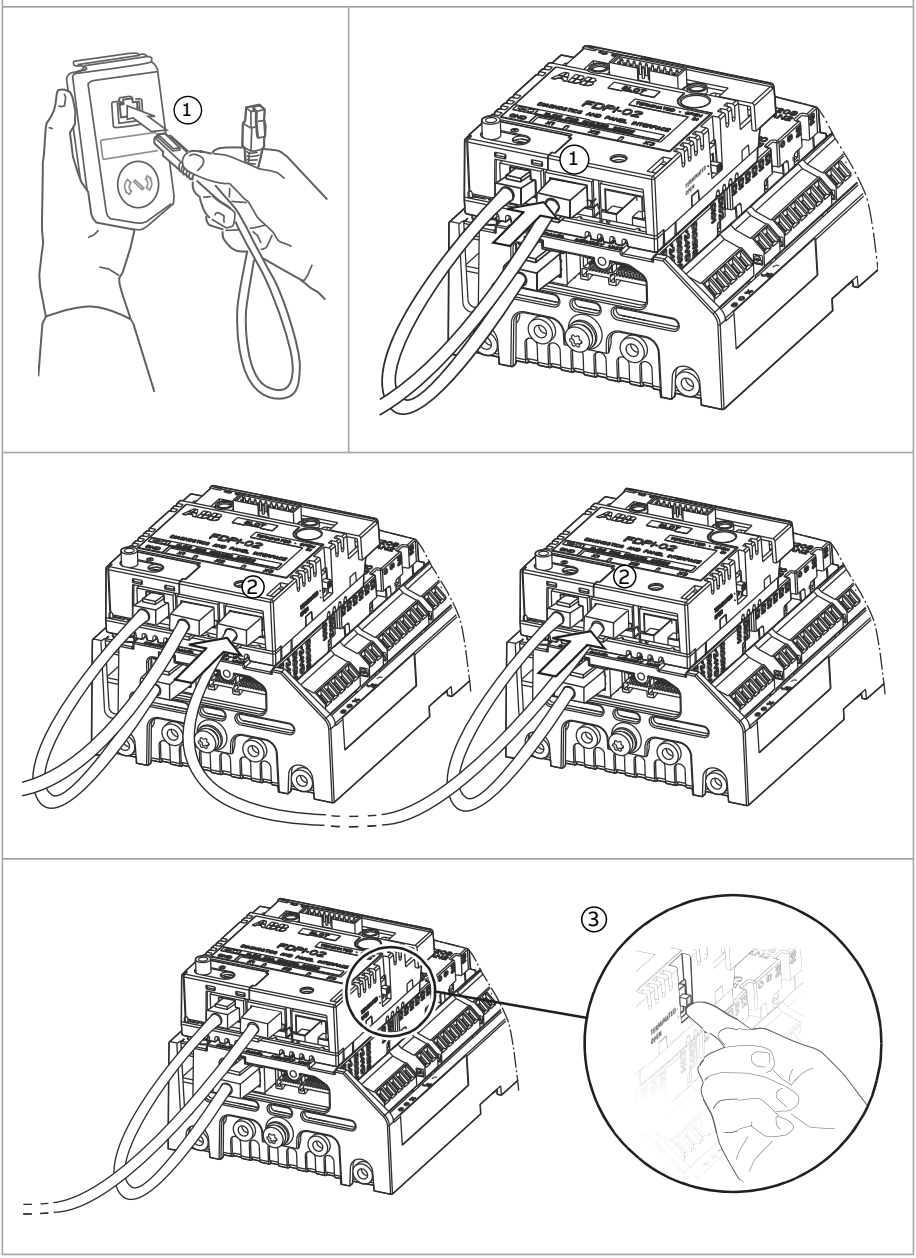

7

Electrical installation – North America (NEC)

Contents of this chapter

This chapter gives instructions on wiring the drive.

Safety

WARNING!
If you are not a qualified electrical professional, do not do installation or maintenance work. Obey the safety instructions of the drive. If you ignore them, injury or death, or damage to the equipment can occur.

Required tools

To do the electrical installation, you need these tools:

- wire stripper
- screwdriver set (Torx, flat and/or Phillips, as appropriate)
- torque wrench.

Required tools

- wire stripper
- screwdriver and/or wrench with a set of suitable bits

Measuring the insulation

See section Measuring the insulation (page 88).

Grounding system compatibility check

See section Grounding system compatibility check (page 89).

Connecting the power cables

Connection diagram

Note: NEC installation can include separate insulated conductors inside a conduit, shielded VFD cable in conduit, or shielded VFD cable without conduit. The normal dashed symbol (3) in this diagram represents the shield of shielded VFD cable. The same solid symbol (2) represents conduit.

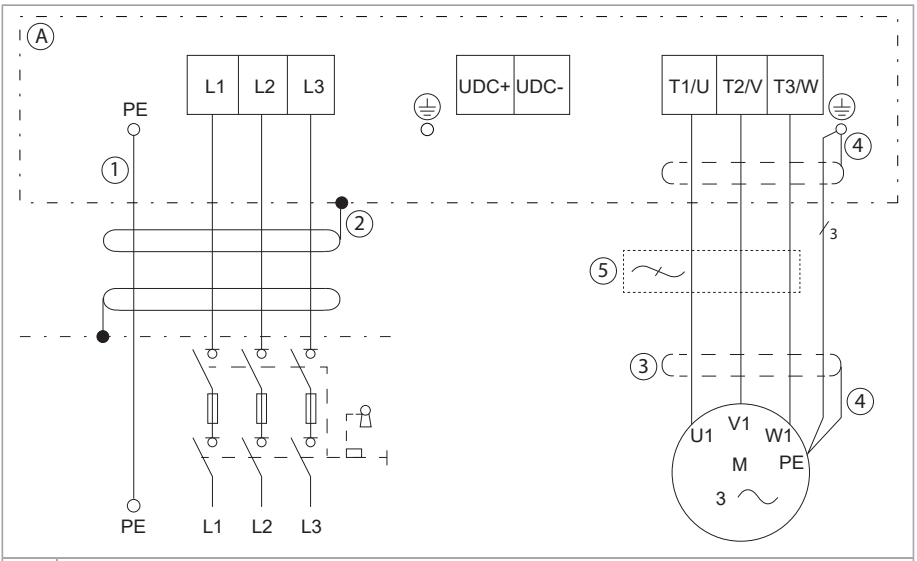

A	Drive
1	Insulated ground conductor in a conduit: Ground to drive's PE terminal and to the distribution panel ground bus. For a VFD cable installation see 4.
2	Conduit ground: Bond the conduit to the drive's conduit box and to the distribution panel enclosure. For a VFD cable installation see 3.
3	Shield of a VFD shielded cable: Ground the shield 360° under drive's grounding clamp. Then twist with the ground conductors and connect under the drive's ground terminal. Ground the shield also 360° at the motor end, then twist and connect under the motor's ground terminal. For a conduit installation see 2.

4	Symmetrically constructed grounding conductors inside a VFD shielded cable: Twist together, combine with the shield and connect under the drive's ground terminal and under the motor's ground terminal. For a conduit installation see 2.
5	If necessary, install an external filter (du/dt, common mode, or sine filter). Filters are available from ABB.
Note: All openings in the drive enclosure must be closed with UL listed devices having the same Type rating as the drive Type.	

Connection procedure

The procedure of connecting the power cables to the standard drive is described below.

1. For frame R3: To remove the front cover, lift the cover from the bottom outwards (1a) and then up (1b).

R3 – UL Type 1	R3 – UL Type 12
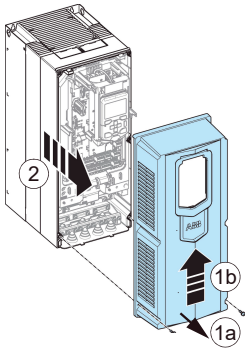	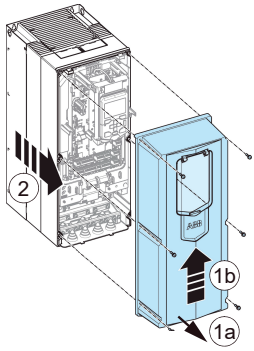

For frame R6 and R8 (UL Type 1): Remove the cover as follows:
- Release the retaining clip with a screwdriver.
- Remove the middle front cover.
- Remove the lower front cover.

For frame R6 and R8 (UL Type 12): Remove the covers as follows:
- Loosen the screws that attach the front cover to the frame.
- Remove the cover.
- For frame R8, disconnect the power supply wire of the auxiliary cooling fan.

R6, R8 – UL Type 1

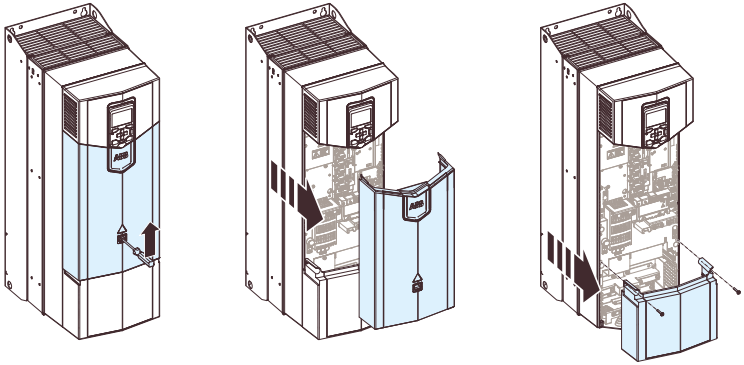

R6, R8 – UL Type 12

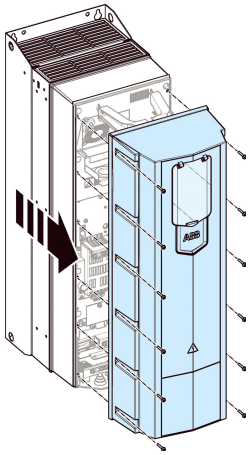

2. Attach the residual voltage warning sticker in the local language.

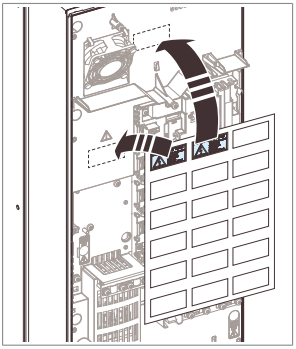

3. For frames R6 and R8: Remove the shroud on the power cable terminals.

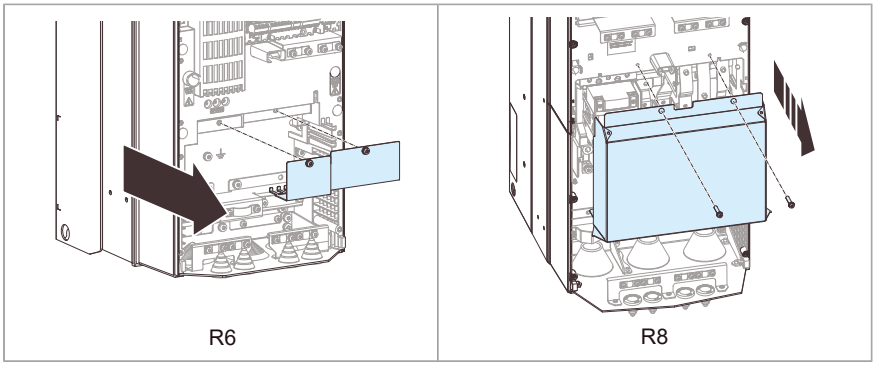

4. For frame R6: If you need more working space, unscrew the screw and lift the EMC plate off. Install the EMC plate again after you have installed the motor and input power cables.

For frame R8: Remove the EMC cover plates (4a). Remove the EMC side plates (4b).

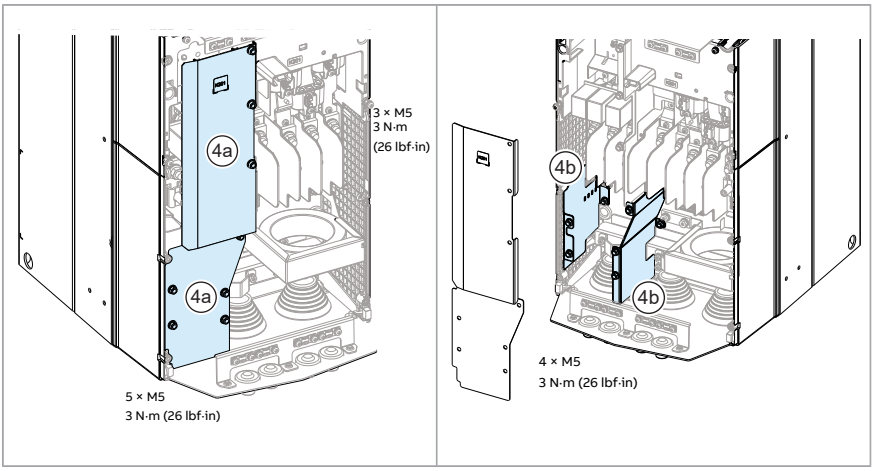

5. For frame R8: For easier installation, you can remove the side plates.

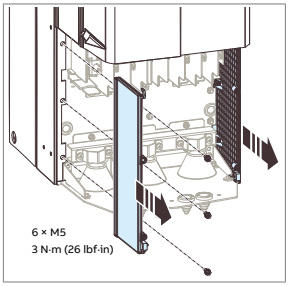

6. Remove the rubber grommets of the cables to be installed from the cable entry plate. Install the grommets downwards in unused holes.

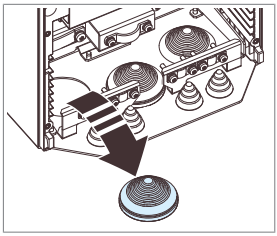

7. If you use metal conduit, attach the cable conduits to the conduit plate. Make sure the conduit is correctly bonded at both ends and that conductivity is consistent throughout the conduit. Slide the cables through the conduit.

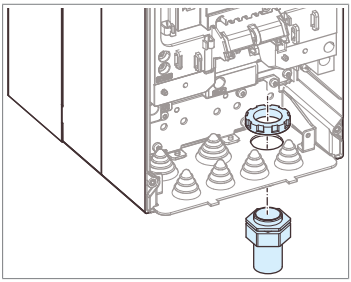

8. Cut the cables to suitable length (note the extra length of the grounding conductors). If you use a symmetrically shielded VFD cable, twist the grounding wires together with the cable shield and connect them to the grounding terminals. Ground the shield 360° at the clamp. If you use discrete conductors connect the insulated ground conductor to the grounding terminal.

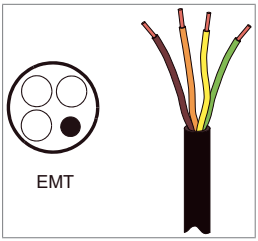

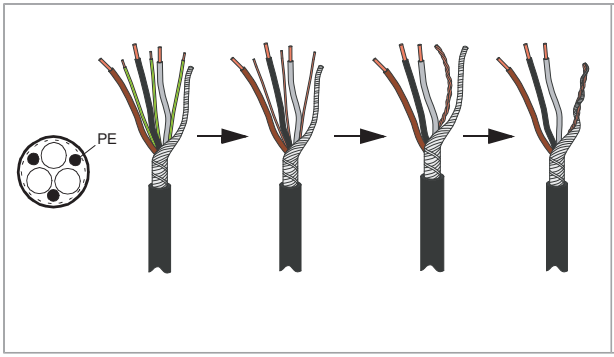

9.
   - For frame R8 (option +E208): Install the common mode filter. For instructions, see Common mode filter kit for ACS880-01 frame R7, and for ACS880-11, ACS880-31, ACH580-31 and ACQ580-31 frame R8 installation instructions (3AXD50000015179 [English]).
   - Connect the phase conductors of the motor cable to the T1/U, T2/V and T3/W terminals and the phase conductors of the input cable to the L1, L2 and L3 terminals.

- If DC cables are present, use only two phase conductors and the ground conductor. Connect the phase conductors to the UDC+ and UDC- terminals.

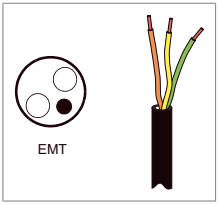

- Tighten the screws to the torque given in the installation drawing below.

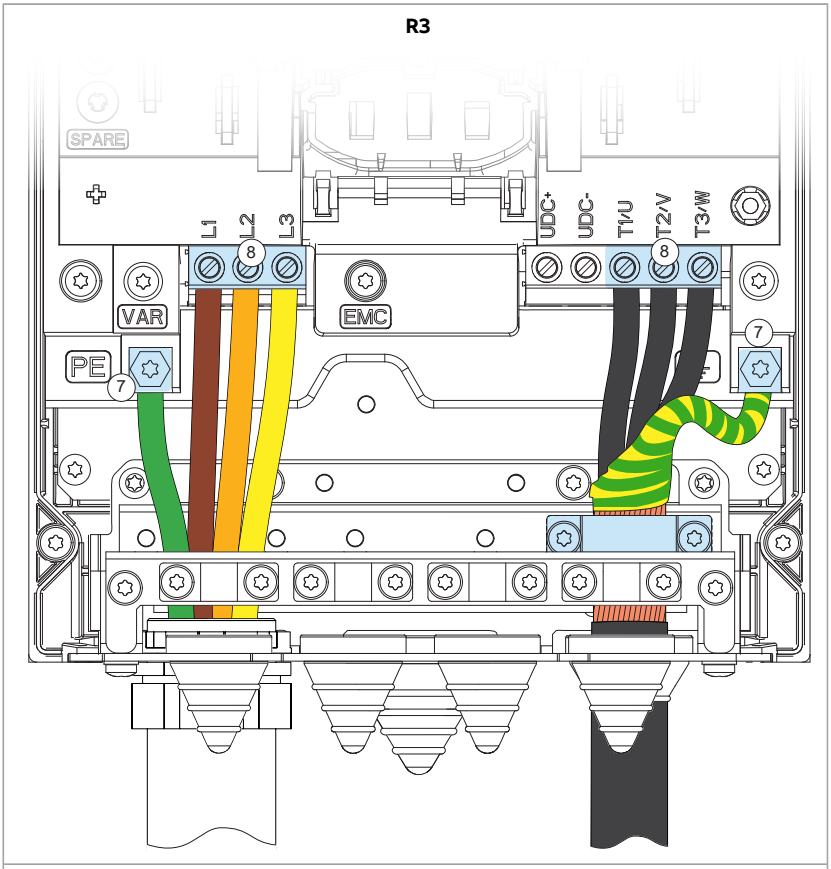

L1, L2, L3, T1/U, T2/V, T3/W, PE (Ground): 1.7 N·m (1.2 lbf·ft)

R6

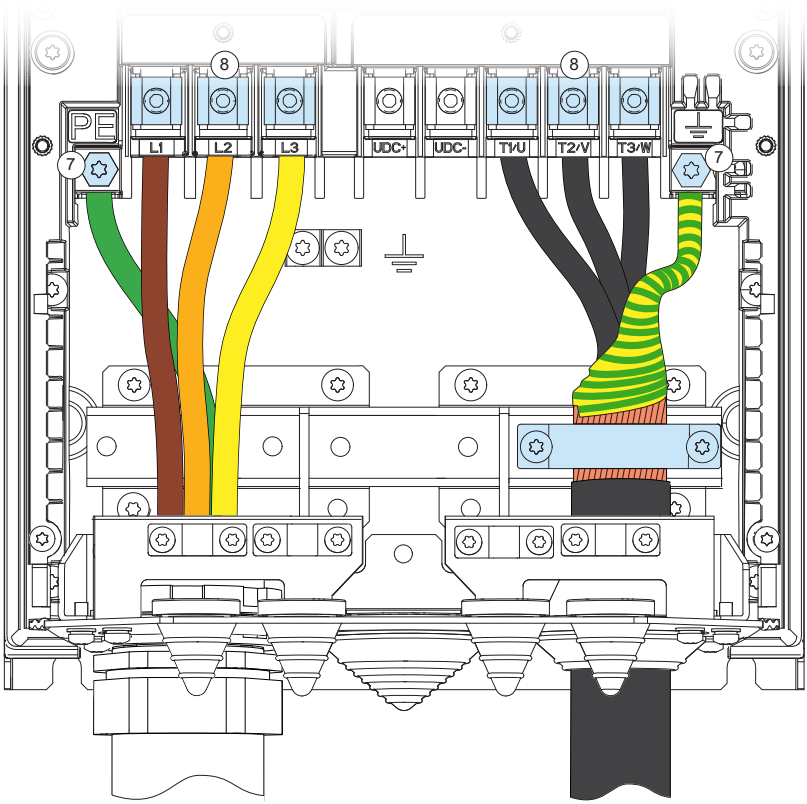

L1, L2, L3, T1/U, T2/V, T3/W: 15 N·m (11.0 lbf·ft)	**PE (Ground):** 2.9 N·m (2.1 lbf·ft)

R8

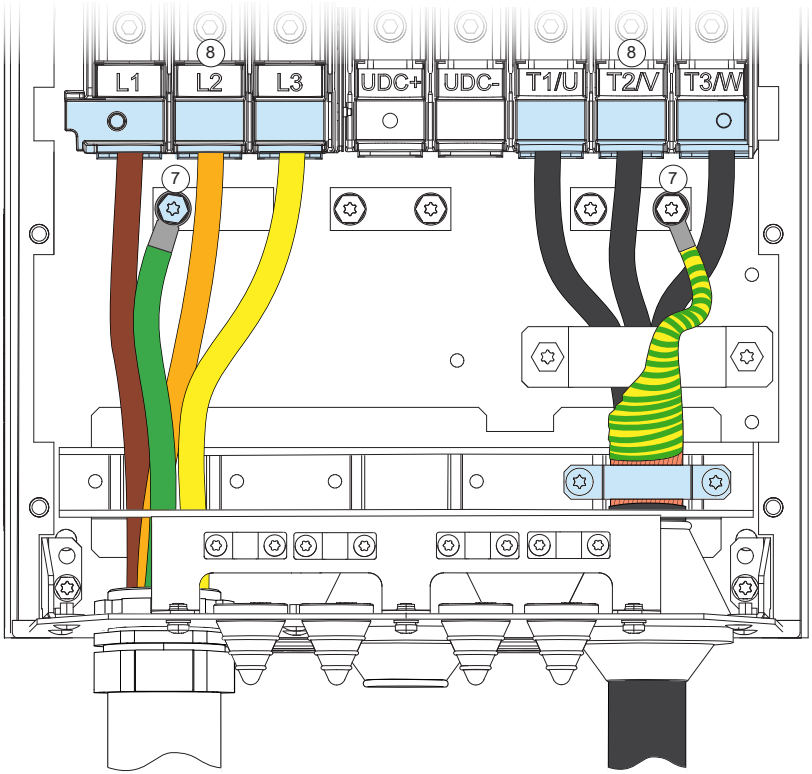

L1, L2, L3, T1/U, T2/V, T3/W: 30 N·m (22.5 lbf·ft)	**PE (Ground):** 9.8 N·m (7.2 lbf·ft)
Do not detach the power cable connectors.	

For frame R8: Install the side plates if removed.

10. For frame R8: Install the EMC plates in reverse order. See step 4.
11. For frame R6 types bigger than -040A-x: Cut tabs in the shroud for the installed cables.

12. Install the shroud onto the power cable connection terminals.

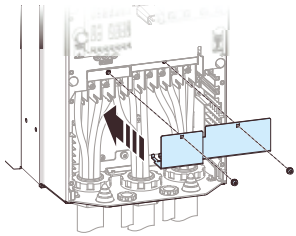

R6

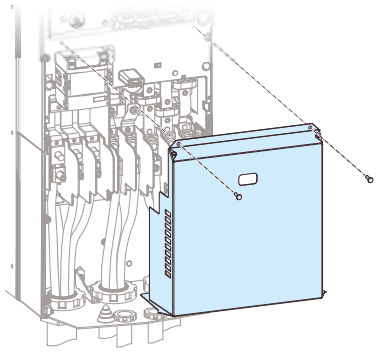

R8

Connecting the control cables

Connection diagram

See Default I/O diagram of the drive control unit (ZCU-1x) (page 129).

Connection procedure

WARNING!
Obey the safety instructions of the drive. If you ignore them, injury or death, or damage to the equipment can occur.

1. Stop the drive and do the steps in section Electrical safety precautions (page 18) before you start the work.
2. Remove the front cover(s) if not already removed.
3. Frame R3: Pull the control panel holder up.

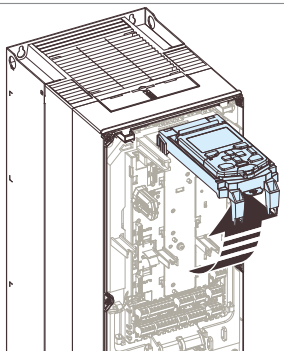

4. Attach the cable conduits to the conduit plate. Make sure the conduit is correctly bonded at both ends and that conductivity is consistent throughout the conduit. Slide the control cables through the conduit. Cut to suitable length (note the extra length of the grounding conductors) and strip the conductors.
5. Ground the outer shields of all control cables 360 degrees at a grounding clamp.
6. Route the cables as shown below.
7. Secure the cables inside the drive mechanically.
8. Frame R3: Ground the pair cable shields and grounding wires under the grounding clamp screw at the cable entry.

Frame R6 and R8: Ground the pair-cable shields and grounding wire under the clamp below the control unit.

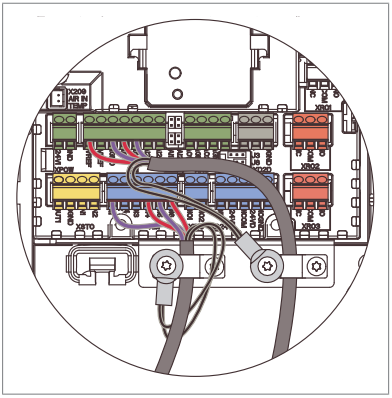

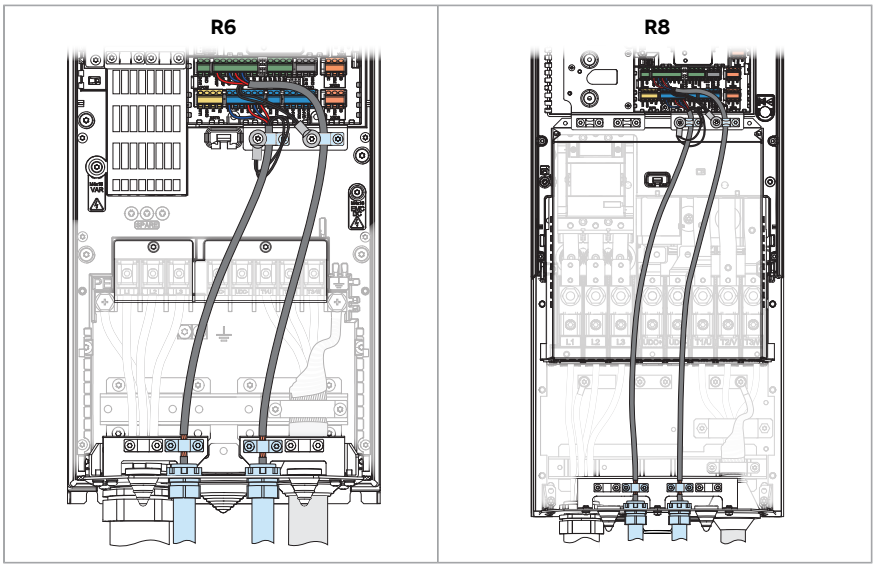

9. Connect the conductors to the appropriate terminals of the control unit and tighten to 0.5 … 0.6 N·m (0.4 lbf·ft).
   See Default I/O diagram of the drive control unit (ZCU-1x) (page 129).

Note:

- Leave the other ends of the control cable shields unconnected or ground them indirectly through a high-frequency capacitor with a few nanofarads, eg, 3.3 nF / 630 V. The shield can also be grounded directly at both ends if they are in the same ground line with no significant voltage drop between the end points.
- Keep any signal wire pairs twisted as close to the terminals as possible. Twisting the wire with its return wire reduces disturbances caused by inductive coupling.

Installing option modules

See section Installing option modules (page 103).

Reinstalling cover(s)

After installation, reinstall the covers.

UL Type 1	UL Type 12
R3 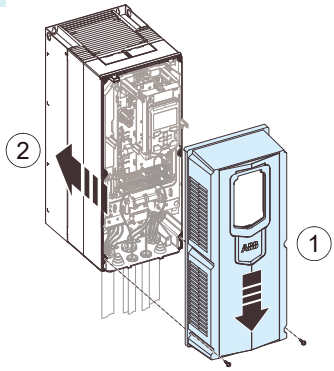 2 N·m (1.5 lbf·ft)	R3 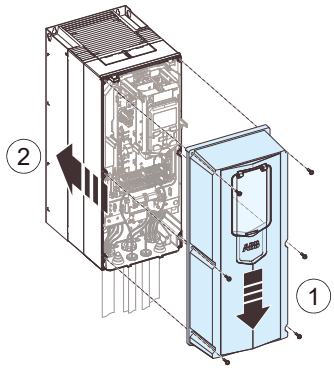 2 N·m (1.5 lbf·ft)

For UL Type 12 frame R8, connect the auxiliary cooling fan power supply wire, see section Replacing the auxiliary cooling fan in the IP55 (UL Type 12) cover, frame R8 (page 155).

UL Type 1	UL Type 12
R6, R8 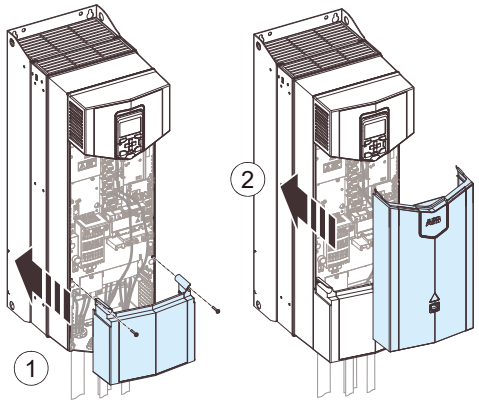 2 N·m (1.5 lbf·ft)	**R6, R8** 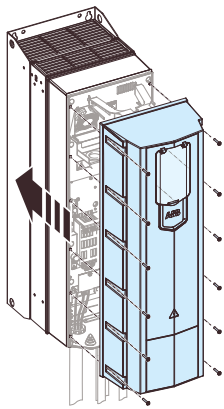 2 N·m (1.5 lbf·ft)

Connecting a PC

See section Connecting a PC (page 108).

Controlling several drives through the panel bus

See section Panel bus (Control of several units from one control panel) (page 108).

8

Control units of the drive

Contents of this chapter

This chapter

- describes the connections of the control unit(s) used in the drive,
- contains the specifications of the inputs and outputs of the control unit(s).

ZCU-12 layout

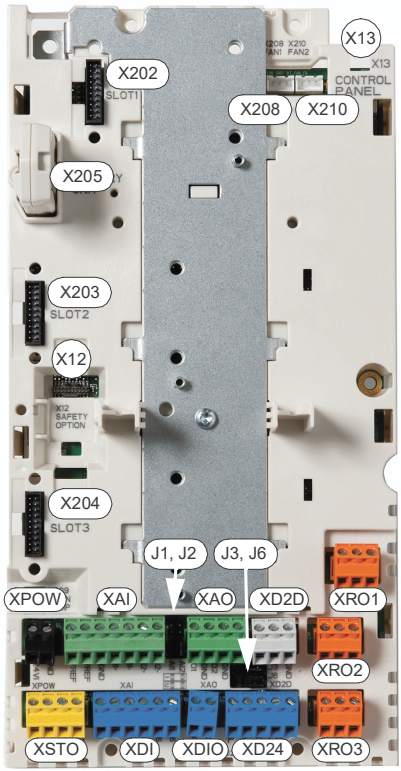

	Description
XAI	Analog inputs
XAO	Analog outputs
XDI	Digital inputs
XDIO	Digital input/outputs
XD24	Digital input interlock (DIIL) and +24 V output
XD2D	Drive-to-drive link
XPOW	External power input
XRO1	Relay output RO1
XRO2	Relay output RO2
XRO3	Relay output RO3
XSTO	Safe torque off connection
X12	Connection for FSO safety functions module
X13	Control panel connection
X202	Option slot 1
X203	Option slot 2
X204	Option slot 3
X205	Memory unit connection (memory unit inserted in the picture)
X208	Cooling fan 1 connection
X210	Cooling fan 2 connection
J1, J2	Current/Voltage selection jumpers (J1, J2) for analog inputs
J3	Drive-to-drive link termination switch (J3)
J6	Common digital input ground selection switch (J6)

Default I/O diagram of the drive control unit (ZCU-1x)

Connection	Term	Description
XPOW External power input		
1 +24VI 2 GND	+24VI GND	24 V DC, 2 A min. (without optional modules)
XAI Reference voltage and analog inputs		
1 +VREF 2 -VREF 3 AGND 4 AI1+ 5 AI1- 6 AI2+ 7 AI2- AI2:I AI1:I AI2:U AI1:U	+VREF	10 V DC, R_L 1…10 kohm
	-VREF	-10 V DC, R_L 1…10 kohm
	AGND	Ground
	AI1+ AI1-	**Speed reference** 0(2)…10 V, R_{in} > 200 kohm [1)]
	AI2+ AI2-	By default not in use. 0(4)…20 mA, R_{in} = 100 ohm[1)]
	AI1	Current (I) / voltage (U) selection jumper for AI1
	AI2	Current (I) / voltage (U) selection jumper for AI2
XAO Analog outputs		
1 AO1 2 AGND 3 AO2 4 AGND	AO1 AGND	**Motor speed rpm** 0…20 mA, R_L < 500 ohm
	AO2 AGND	**Motor current** 0…20 mA, R_L < 500 ohm
XD2D Drive-to-drive link		
1 B 2 A 3 BGND	B A BGND	Master/follower, drive-to-drive or embedded fieldbus connection [2)]
	J3	Drive-to-drive link termination [2)]
XRO1, XRO2, XRO3 Relay outputs		
1 NC 2 COM 3 NO 1 NC 2 COM 3 NO 1 NC 2 COM 3 NO Fault +24VD DIOGND	NC COM NO	**Ready run** 250 V AC / 30 V DC 2 A
	NC COM NO	**Running** 250 V AC / 30 V DC 2 A
	NC COM NO	**Fault (-1)** 250 V AC / 30 V DC 2 A

Connection	Term	Description
XD24 Auxiliary voltage output, digital interlock [3]		
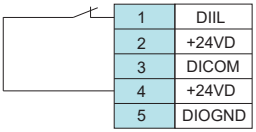	DIIL	Run enable [3]
	+24VD	+24 V DC 200 mA [4]
	DICOM	Digital input ground
	+24VD	+24 V DC 200 mA [4]
	DIOGND	Digital input/output ground
XDIO Digital input/outputs		
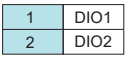	DIO1	Output: Ready run
	DIO2	Output: Running
	J6	Ground selection [5]
XDI Digital inputs		
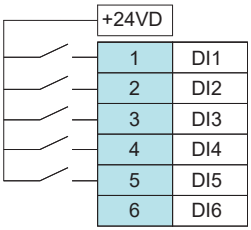	DI1	Stop (0) / Start (1)
	DI2	Forward (0) / Reverse (1)
	DI3	Reset
	DI4	Acc/Dec time select [6]
	DI5	Constant speed 1 (1 = On) [7]
	DI6	By default, not in use.
XSTO	Safe torque off circuits must be closed for the drive to start. [8]	
X12	Safety options connection	
X13	Control panel connection	
X205	Memory unit connection	

1) Current [0(4)…22 mA, R_{in} = 100 ohm] or voltage [0(2)…11 V, R_{in} > 200 kohm] input selected by jumper. Change of setting requires reboot of control unit.

2) See section The XD2D connector (page 132)

3) See section DIIL input (page 132).

4) Total load capacity of these outputs is 4.8 W (200 mA at 24 V) minus the power taken by DIO1 and DIO2.

5) Determines whether DICOM is separated from DIOGND (ie. common reference for digital inputs floats; in practice, selects whether the digital inputs are used in current sinking or sourcing mode). See also ZCU-1x ground isolation diagram (page 137). DICOM=DIOGND ON: DICOM connected to DIOGND. OFF: DICOM and DIOGND separate.

6) 0 = Acceleration/deceleration ramps defined by parameters *23.12/23.13* in use. 1 = Acceleration/deceleration ramps defined by parameters *23.14/23.15* in use.

7) Constant speed 1 is defined by parameter *22.26*.

8) See chapter The Safe torque off function (page 215).

The wire size accepted by all screw terminals (for both stranded and solid wire) is 0.5 … 2.5 mm^2 (24…12 AWG). The torque is 0.5 N·m (5 lbf·in).

Additional information on the connections

External power supply for the control unit (XPOW)

The control unit is powered from a 24 V DC, 2 A supply through terminal block XPOW.

Using an external supply is recommended, if:

- the control unit needs to be kept operational during input power breaks, for example, because of continuous fieldbus communication
- immediate restart is needed after a power break (that is, no control unit power-up delay is allowed).

DI6 as a PTC sensor input

PTC sensors can be connected to this input for motor temperature measurement as follows. The sensor can alternatively be connected to a FEN encoder interface module. At the sensor end of the cable, leave the shields unconnected or ground them indirectly via a high-frequency capacitor with a few nanofarads, for example 3.3 nF / 630 V. The shield can also be grounded directly at both ends if they are in the same ground line with no significant voltage drop between the end points. See the firmware manual of the inverter unit for parameter settings.

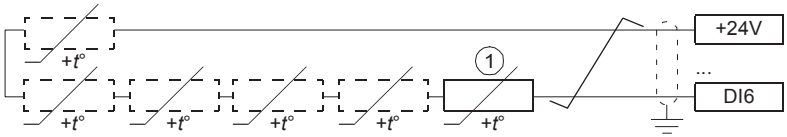

1	1…6 PTC thermistors connected in series

WARNING!
As the inputs pictured above are not insulated according to IEC 60664, the connection of the motor temperature sensor requires double or reinforced insulation between motor live parts and the sensor.

WARNING!
Make sure that the voltage does not exceed the maximum permitted voltage of the PTC sensor.

AI1 or AI2 as a Pt100, Pt1000, PTC or KTY84 sensor input

Sensors for motor temperature measurement can be connected between an analog input and output, an example connection is shown below. (Alternatively, you can connect the KTY to an FIO-11 or FAIO-01 analog I/O extension module or a FEN

encoder interface module.) At the sensor end of the cable, leave the shields unconnected or ground them indirectly via a high-frequency capacitor with a few nanofarads, for example 3.3 nF / 630 V. The shield can also be grounded directly at both ends if they are in the same ground line with no significant voltage drop between the end points.

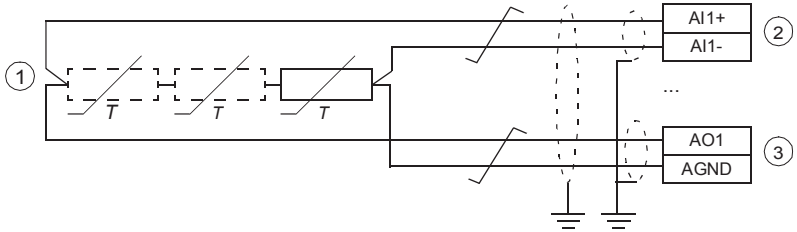

1	One, two or three Pt100, Pt1000 or PTC sensors; or one KTY84 sensor
2	Set the input type to voltage with the appropriate switch or jumper on the control unit. Make the corresponding setting in the control program in parameter group 12 Standard AI.
3	Select the excitation mode in parameter group 13 Standard AO.

WARNING!
As the inputs pictured above are not insulated according to IEC/EN 60664, the connection of the motor temperature sensor requires double or reinforced insulation between motor live parts and the sensor.

WARNING!
Make sure that the excitation current does not exceed the maximum permitted current of the Pt100/Pt1000 sensor.

DIIL input

The DIIL input is used for the connection of safety circuits. The input is parametrized to stop the unit when the input signal is lost.

Note: This input is **not** SIL or PL certified.

The XD2D connector

The XD2D connector provides an RS-485 connection that can be used for

- basic master/follower communication with one master drive and multiple followers,
- fieldbus control through the embedded fieldbus interface (EFB), or

- drive-to-drive (D2D) communication implemented by application programming.

See the firmware manual of the drive for the related parameter settings.

Enable bus termination on the units at the ends of the drive-to-drive link. Disable bus termination on the intermediate units.

Use a high-quality shielded twisted-pair cable for the wiring, fro exmple, Belden 9842. The nominal impedance of the cable should be 100…165 ohm. You can use one pair for the data wiring and another pair or a wire for the grounding. Avoid unnecessary loops and parallel runs near power cables.

The following diagram shows the wiring between control units.

ZCU-12

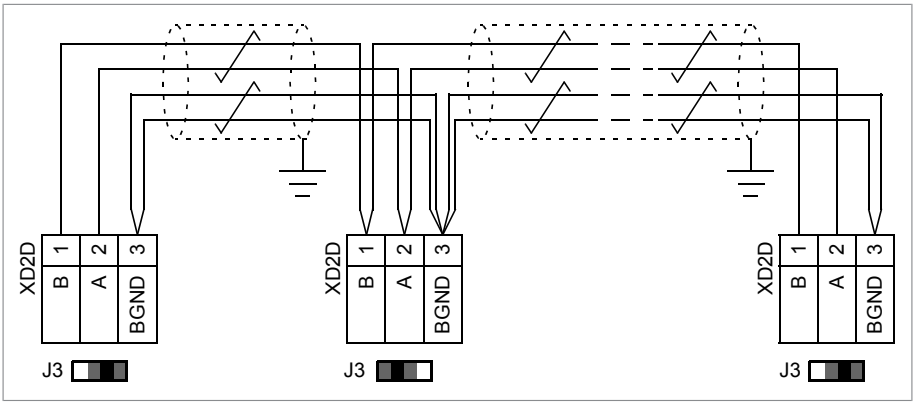

Safe torque off (XSTO)

See chapter The Safe torque off function (page 215).

Note: The XSTO input only acts as a true Safe torque off input on the inverter control unit. De-energizing the IN1 and/or IN2 terminals of other units (supply, DC/DC converter, or brake unit) will stop the unit but not constitute a true safety function.

FSO safety functions module connection (X12)

Refer to the applicable FSO module user's manual.

Connector data

Power supply (XPOW)	Connector pitch 5 mm, wire size 0.5 … 2.5 mm^2 (22…12 AWG) 24 V (±10%) DC, 2 A External power input.
Relay outputs RO1…RO3 (XRO1…XRO3)	Connector pitch 5 mm, wire size 0.5 … 2.5 mm^2 (22…12 AWG) 250 V AC / 30 V DC, 2 A Protected by varistors
+24 V output (XD24:2 and XD24:4)	Connector pitch 5 mm, wire size 0.5 … 2.5 mm^2 (22…12 AWG) Total load capacity of these outputs is 4.8 W (200 mA / 24 V) minus the power taken by DIO1 and DIO2.
Digital inputs DI1…DI6 (XDI:1…XDI:6)	Connector pitch 5 mm, wire size 0.5 … 2.5 mm^2 (22…12 AWG) 24 V logic levels: “0” < 5 V, “1” > 15 V R_{in}: 2.0 kohm Input type: NPN/PNP (DI1…DI5), PNP (DI6) Hardware filtering: 0.04 ms, digital filtering up to 8 ms DI6 (XDI:6) can alternatively be used as an input for a PTC sensor. "0" > 4 kohm, "1" < 1.5 kohm. I_{max}: 15 mA (DI1…DI5), 5 mA (DI6)
Start interlock input DIIL (XD24:1)	Connector pitch 5 mm, wire size 0.5 … 2.5 mm^2 (22…12 AWG) 24 V logic levels: "0" < 5 V, "1" > 15 V R_{in}: 2.0 kohm Input type: NPN/PNP Hardware filtering: 0.04 ms, digital filtering up to 8 ms
Digital inputs/outputs DIO1 and DIO2 (XDIO:1 and XDIO:2) Input/output mode selection by parameters. DIO1 can be configured as a frequency input (0…16 kHz with hardware filtering of 4 microseconds) for 24 V level square wave signal (sinusoidal or other wave form cannot be used). DIO2 can be configured as a 24 V level square wave frequency output. See the firmware manual, parameter group 111/11.	Connector pitch 5 mm, wire size 0.5 … 2.5 mm^2 (22…12 AWG) As inputs: 24 V logic levels: "0" < 5 V, "1" > 15 V. R_{in}: 2.0 kohm. Filtering: 1 ms. As outputs: Total output current from +24VD is limited to 200 mA 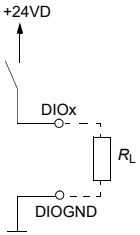

Reference voltage for analog inputs +VREF and -VREF (XAI:1 and XAI:2)	Connector pitch 5 mm, wire size 0.5 … 2.5 mm^2 (22…12 AWG) 10 V ±1% and -10 V ±1%, R_{load} 1…10 kohm Maximum output current: 10 mA
Analog inputs AI1 and AI2 (XAI:4 … XAI:7). Current/voltage input mode selection by jumpers	Connector pitch 5 mm, wire size 0.5 … 2.5 mm^2 (22…12 AWG) Current input: -20…20 mA, R_{in} = 100 ohm Voltage input: -10…10 V, R_{in} > 200 kohm Differential inputs, common mode range ±30 V Sampling interval per channel: 0.25 ms Hardware filtering: 0.25 ms, adjustable digital filtering up to 8 ms Resolution: 11 bit + sign bit Inaccuracy: 1% of full scale range
Analog outputs AO1 and AO2 (XAO)	Connector pitch 5 mm, wire size 0.5 … 2.5 mm^2 (22…12 AWG) 0…20 mA, R_{load} < 500 ohm Frequency range: 0…300 Hz Resolution: 11 bit + sign bit Inaccuracy: 2% of full scale range
XD2D connector	Connector pitch 5 mm, wire size 0.5 … 2.5 mm^2 (22…12 AWG) Physical layer: RS-485 Transmission rate: 8 Mbit/s Cable type: Shielded twisted-pair cable with a twisted pair for data and a wire or another pair for signal ground (nominal impedance 100 … 165 ohm, for example Belden 9842) Maximum length of link: 50 m (164 ft) Termination by jumper
Safe torque off connection (XSTO)	Connector pitch 5 mm, wire size 0.5 … 2.5 mm^2 (22…12 AWG) Input voltage range: -3…30 V DC Logic levels: "0" < 5 V, "1" > 17 V. **Note:** For the unit to start, both connections must be “1”. This applies to all control units (including drive, inverter, supply, brake, DC/DC converter etc. control units), but true Safe torque off functionality is only achieved through the XSTO connector of the drive/inverter control unit. Current consumption: 30 mA (frames R3, R6) or 12 mA (frame R8) (continuous) per STO channel EMC (immunity) according to IEC 61326-3-1 and IEC 61800-5-2
Control panel connection (X13)	Connector: RJ-45 Cable length < 100 m (328 ft)

The terminals of the control unit fulfill the Protective Extra Low Voltage (PELV) requirements. The PELV requirements of a relay output are not fulfilled if a voltage higher than 48 V is connected to the relay output.

ZCU-1x ground isolation diagram

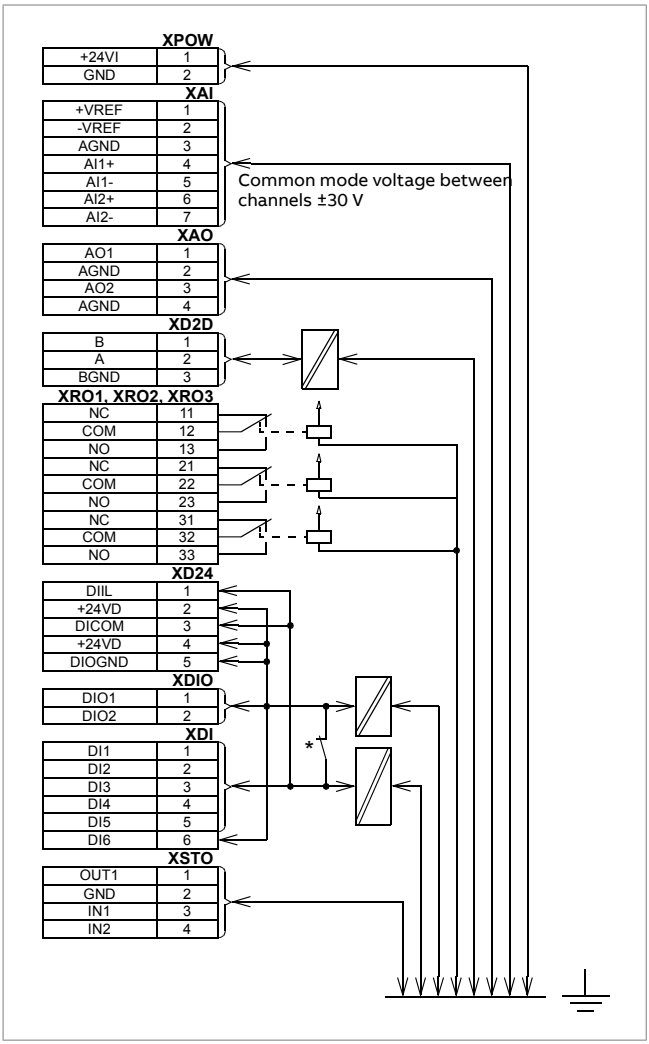

* Ground selector (J6) settings

All digital inputs share a common ground (DICOM connected to DIOGND). This is the default setting.

Ground of digital inputs DI1…DI5 and DIIL (DICOM) is isolated from DIO signal ground (DIOGND).
Isolation voltage 50 V.

9

Installation checklist

Contents of this chapter

This chapter contains a checklist for the mechanical and electrical installation of the drive.

Checklist

Examine the mechanical and electrical installation of the drive before start-up. Go through the checklist together with another person.

WARNING!
Obey the safety instructions of the drive. If you ignore them, injury or death, or damage to the equipment can occur. If you are not a qualified electrical professional, do not do installation, commissioning or maintenance work.

WARNING!
Stop the drive and do the steps in section Electrical safety precautions (page 18) before you start the work.

Make sure that ...	☑
The ambient operating conditions meet the drive ambient conditions specification and enclosure rating (IP code).	☐
The supply voltage matches the nominal input voltage of the drive. See the type designation label.	☐

Make sure that ...	☑
The insulation resistance of the input power cable, motor cable and motor is measured according to local regulations and the manuals of the drive.	☐
The drive is attached securely on an even, vertical and non-flammable wall.	☐
The cooling air flows freely in and out of the drive.	☐
If the drive is connected to a network other than a symmetrically grounded TN-S system: You have done all the required modifications (for example, you may need to disconnect the EMC filter or ground-to-phase varistor). See the electrical installation instructions.	☐
Appropriate AC fuses and main disconnecting device are installed.	☐
There is an adequately sized protective earth (ground) conductor(s) between the drive and the switchboard, the conductor is connected to correct terminal, and the terminal is tightened to the correct torque. Grounding has also been measured according to the regulations.	☐
The input power cable is connected to the correct terminals, the phase order is correct, and the terminals are tightened to the correct torque.	☐
There is an adequately sized protective earth (ground) conductor between the motor and the drive. The conductor is connected to the correct terminal, and the terminal is tightened to the correct torque. Grounding has also been measured according to the regulations.	☐
The motor cable is connected to the correct terminals, the phase order is correct, and the terminals are tightened to the correct torque.	☐
The motor cable is routed away from other cables.	☐
No power factor compensation capacitors are connected to the motor cable.	☐
The control cables are connected to the correct terminals, and the terminals are tightened to the correct torque.	☐
If a drive bypass connection will be used: The Direct On Line contactor of the motor and the drive output contactor are either mechanically and/or electrically interlocked, that is, they cannot be closed at the same time. A thermal overload device must be used for protection when bypassing the drive. Refer to local codes and regulations.	☐
There are no tools, foreign objects or dust from drilling inside the drive.	☐
The area in front of the drive is clean: the drive cooling fan cannot draw any dust or dirt inside.	☐
Drive covers and cover of the motor connection box are in place.	☐
The motor and the driven equipment are ready for power-up.	☐

10

Start-up

Contents of this chapter

This chapter describes the start-up procedure of the drive.

Reforming the capacitors

The capacitors must be reformed if the drive has not been powered (either in storage or unused) for a year or more. The manufacturing date is on the type designation label. For information on reforming the capacitors, refer to Capacitor reforming instructions (3BFE64059629 [English]).

Start-up procedure

1. Run setup of the drive control program according to the start-up instructions given in ACS880-11 drives quick installation and start-up guide (3AXD50000803026 [English]) or in the firmware manual.
   - For drives with ABB sine filter: Check that parameter 95.15 Special HW settings is set to ABB sine filter.

     For other sine filters: See Sine filter hardware manual (3AXD50000016814 [English]).
   - For drives with ABB motors in explosive atmospheres: See ACS880 drives with ABB motors in explosive atmospheres supplement (3AXD50000019585 [English]).
2. Validate the Safe torque off function according to the instructions given in chapter The Safe torque off function (page 215).
3. Validate the safety functions (options +Q923, +Q973 and +Q982) as described in FSO-12 safety functions module user's manual (3AXD50000015612 [English]),

FSO-21 safety functions module user's manual (3AXD50000015614 [English]) or FSPS-21 PROFIsafe safety functions module user's manual (3AXD50000158638 [English]).

11

Maintenance

Contents of this chapter

This chapter contains maintenance instructions.

Maintenance intervals

The tables below show the maintenance tasks which can be done by the end user. The complete maintenance schedule is available on the Internet (https://new.abb.com/drives/services/maintenance/preventive-maintenance). For more information, consult your local ABB Service representative (www.abb.com/searchchannels).

Description of symbols

Action	Description
I	Inspection (visual inspection and maintenance action if needed)
P	Performance of on/off-site work (commissioning, tests, measurements or other work)
R	Replacement

Recommended maintenance intervals after start-up

Recommended annual actions by the user	
Action	**Description**
P	Quality of supply voltage
I	Spare parts

Recommended annual actions by the user	
Action	**Description**
P	Capacitor reforming for spare modules and spare capacitors
I	Tightness of terminals
I	Dustiness, corrosion or temperature
P	Heat sink cleaning

Recommended maintenance actions by the user							
Component	**Years from start-up**						
	3	**6**	**9**	**12**	**15**	**18**	**21**
Cooling							
Main cooling fan							
Main cooling fans			R			R	
Auxiliary cooling fan							
Auxiliary cooling fan			R			R	
Second auxiliary cooling fan (IP55, UL Type 12)			R			R	
Aging							
Control unit battery (real-time clock)		R		R		R	
Control panel battery (real-time clock)			R			R	
Functional safety							
Safety function test	I See the maintenance information of the safety function						
Safety component expiry (Mission time, T_M)	20 years						
	4FPS10000309652						

Note:

- Maintenance and component replacement intervals are based on the assumption that the equipment is operated within the specified ratings and ambient conditions. ABB recommends annual drive inspections to ensure the highest reliability and optimum performance.
- Long term operation near the specified maximum ratings or ambient conditions may require shorter maintenance intervals for certain components. Consult your local ABB Service representative for additional maintenance recommendations.

Cleaning the exterior of the drive

WARNING!
Obey the safety instructions of the drive. If you ignore them, injury or death, or damage to the equipment can occur. If you are not a qualified electrical professional, do not do installation, commissioning or maintenance work.

1. Stop the drive and do the steps in section Electrical safety precautions (page 18) before you start the work.
2. Clean the exterior of the drive. Use:
   - vacuum cleaner with an antistatic hose and nozzle
   - soft brush
   - dry or damp (not wet) cleaning cloth. Moisten with clean water, or mild detergent (pH 5…9 for metal, pH 5…7 for plastic).

WARNING!
Prevent water from entering the drive. Never use excessive amount of water, a hose, steam, etc.

Cleaning the heatsink

The drive module heatsink fins pick up dust from the cooling air. The drive runs into overtemperature warnings and faults if the heatsink is not clean. When necessary, clean the heatsink as follows.

WARNING!
Use the required personal protective equipment. Wear protective gloves and long sleeves. Some parts have sharp edges.

WARNING!
Use a vacuum cleaner with antistatic hose and nozzle, and wear a grounding wristband. Using a normal vacuum cleaner creates static discharges which can damage circuit boards.

1. Stop the drive and do the steps in section Electrical safety precautions (page 18) before you start the work.
2. Remove the module cooling fan(s). See the separate instructions.
3. Blow dry, clean and oil-free compressed air from bottom to top and simultaneously use a vacuum cleaner at the air outlet to trap the dust. If there is a risk of dust entering adjoining equipment, do the cleaning in another room.
4. Reinstall the cooling fan.

Fans

In a speed-controlled fan, the speed of the fan matches the cooling needs. This increases the life span of the fan.

Main fans are speed controlled. When the drive is stopped, the main fan is kept running at low speed to cool the control unit. IP21 (UL Type 1) frames R6…R8 and all IP55 (UL Type 12) frames have auxiliary fans that are not speed controlled and run all the time when the control unit is powered.

Replacement fans are available from the manufacturer. Do not use other than specified spare parts.

Replacing the main cooling fan, frame R3

1. Stop the drive and do the steps in section Electrical safety precautions (page 18) before you start the work.
2. To release the locking, turn clockwise with a screwdriver.
3. Turn the fan assembly off.
4. Install the new fan in reverse order.

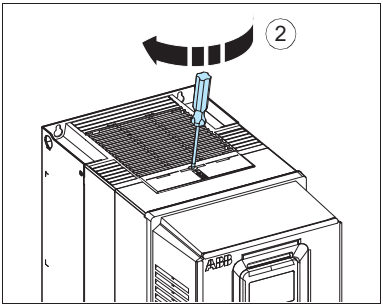

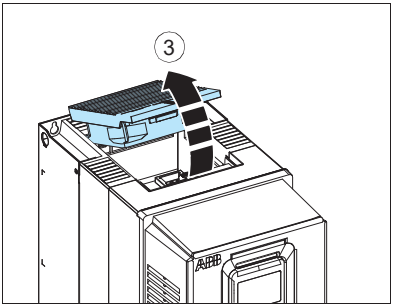

Replacing the main cooling fan, frame R6

1. Stop the drive and do the steps in section Electrical safety precautions (page 18) before you start the work.
2. Lever the fan assembly off the drive frame with for example a screwdriver and pull out the fan assembly.
3. Pull the fan assembly down.
4. Disconnect the fan power supply wire from the drive.
5. Install the new fan in reverse order.

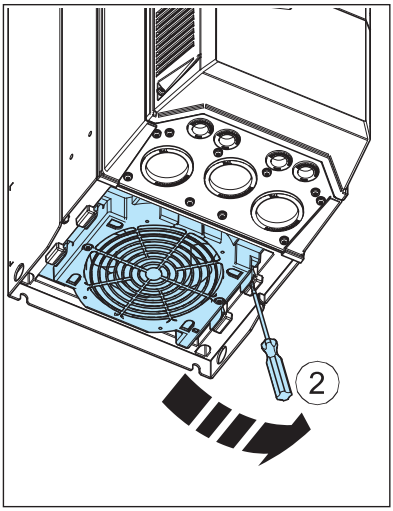

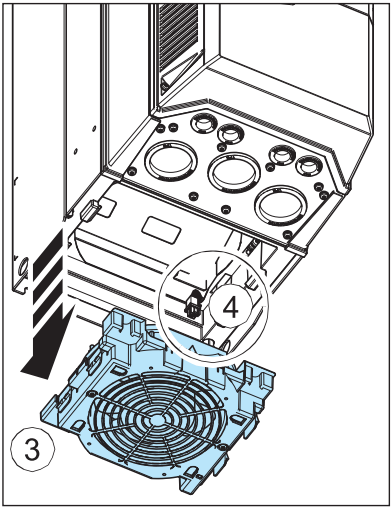

Replacing the main cooling fan, frame R8

1. Stop the drive and do the steps in section Electrical safety precautions (page 18) before you start the work.
2. Undo the mounting screws of the fan assembly.
3. Unplug the fan power supply and grounding wires from the drive.
4. Pull the fan assembly down.
5. Undo the mounting screws of the fan.
6. Install the new fan in reverse order.

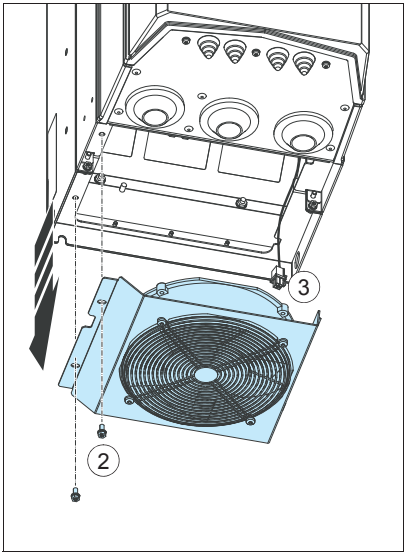

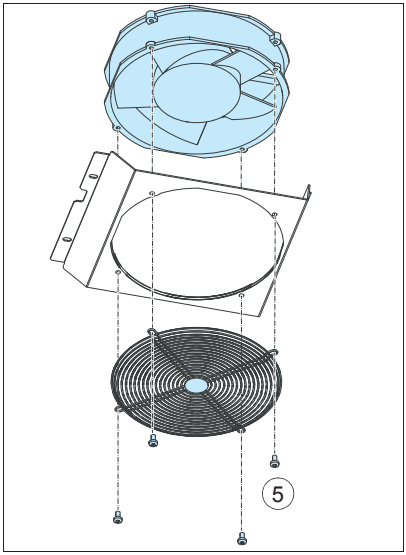

Replacing the auxiliary cooling fan of frame R3, IP55 (UL Type 12) and +C135 IP21 (UL Type 1)

1. Stop the drive and do the steps in section Electrical safety precautions (page 18) before you start the work.
2. Remove the front cover. See section Connection procedure (page 91).
3. Release the retaining clips.
4. Lift the fan off.
5. Unplug fan power supply wires.
6. Install the new fan in reverse order.

   Note: Make sure that the arrow on the fan points down.

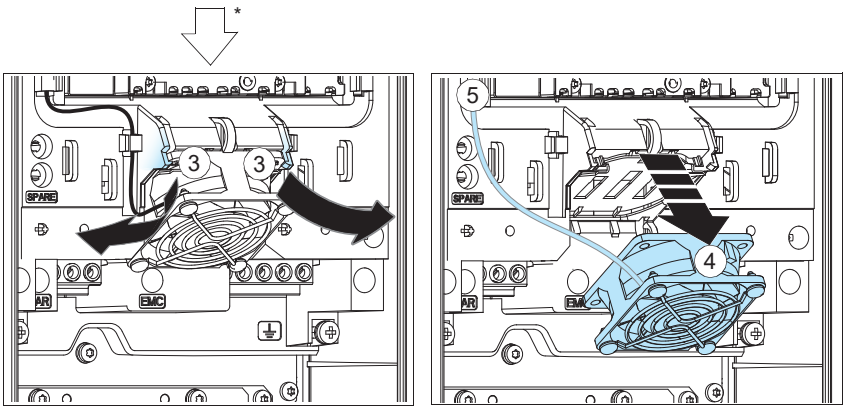

*Blowing direction down

Replacing the auxiliary cooling fan, frame R6

1. Stop the drive and do the steps in section Electrical safety precautions (page 18) before you start the work.
2. Remove the upper front covers. See section Connection procedure (page 91).
3. Release the retaining clips.
4. Lift the fan off.
5. Unplug fan power supply wires.
6. Remove the grille from the fan.
7. Install the new fan in reverse order.

   Note: Make sure that the arrow on the fan points up.

8. Reinstall the front covers. See section Reinstalling cover(s) (page 107).

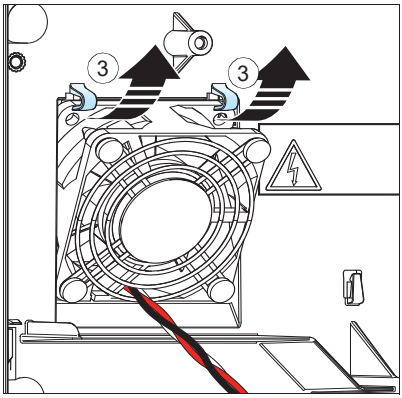

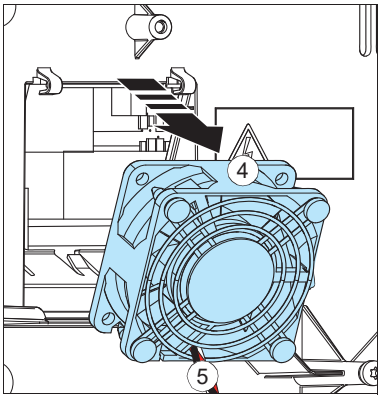

Replacing the second auxiliary cooling fan, IP55 (UL Type 12) frame R6

Another auxiliary cooling fan (FAN2) at right-hand side of the control panel is included in IP55 (UL Type 12) frame R6 types -061A-3 and -052A-5 and bigger. For the replacement process, see Replacing the auxiliary cooling fan, frame R6 (page 151).

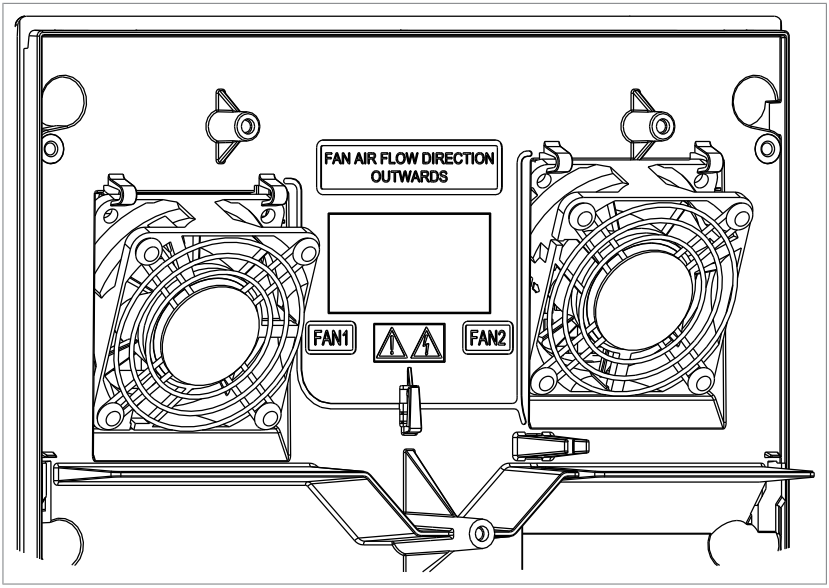

Replacing the internal auxiliary cooling fan, frame R8

1. Stop the drive and do the steps in section Electrical safety precautions (page 18) before you start the work.
2. Remove the upper front covers. See section Connection procedure on page 90.
3. Release the retaining clips.
4. Lift the fan off.
5. Unplug fan power supply wires.
6. Install the new fan in reverse order.

   Note: Make sure that the arrow on the fan points up.

7. Replace the front covers.

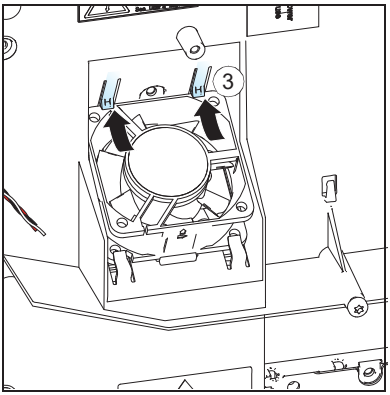

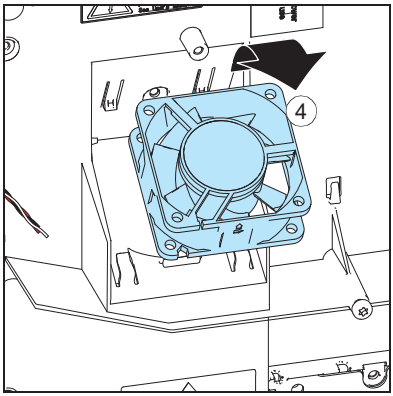

Replacing the second internal auxiliary cooling fan, IP55 (UL Type 12) frame R8

1. Stop the drive and do the steps in section Electrical safety precautions (page 18) before you start the work.
2. Remove the IP55 front cover, disconnect the power supply wire of the auxiliary cooling fan in the cover (see section Replacing the auxiliary cooling fan the IP55 (UL Type 12) cover, frame R8).
3. Release the retaining clips.
4. Lift the fan off.
5. Unplug the power supply wire from the branching plug.
6. Install the new fan in reverse order. Make sure that the arrow on the fan points out.
7. Replace the front cover.

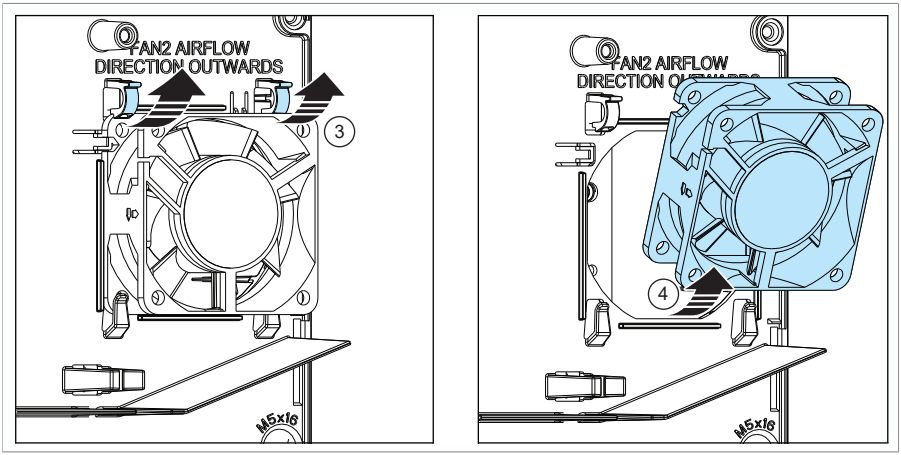

Replacing the auxiliary cooling fan in the IP55 (UL Type 12) cover, frame R8

1. Stop the drive and do the steps in section Electrical safety precautions (page 18) before you start the work.
2. Remove the IP55 front cover. Unplug the auxiliary cooling fan power supply wire.
3. Remove the lower front cover from the IP55 cover.
4. Pull the fan supply wire through the grommet.
5. Remove the fan.
6. Install the new fan in reverse order. Make sure that the arrow on the fan points up.

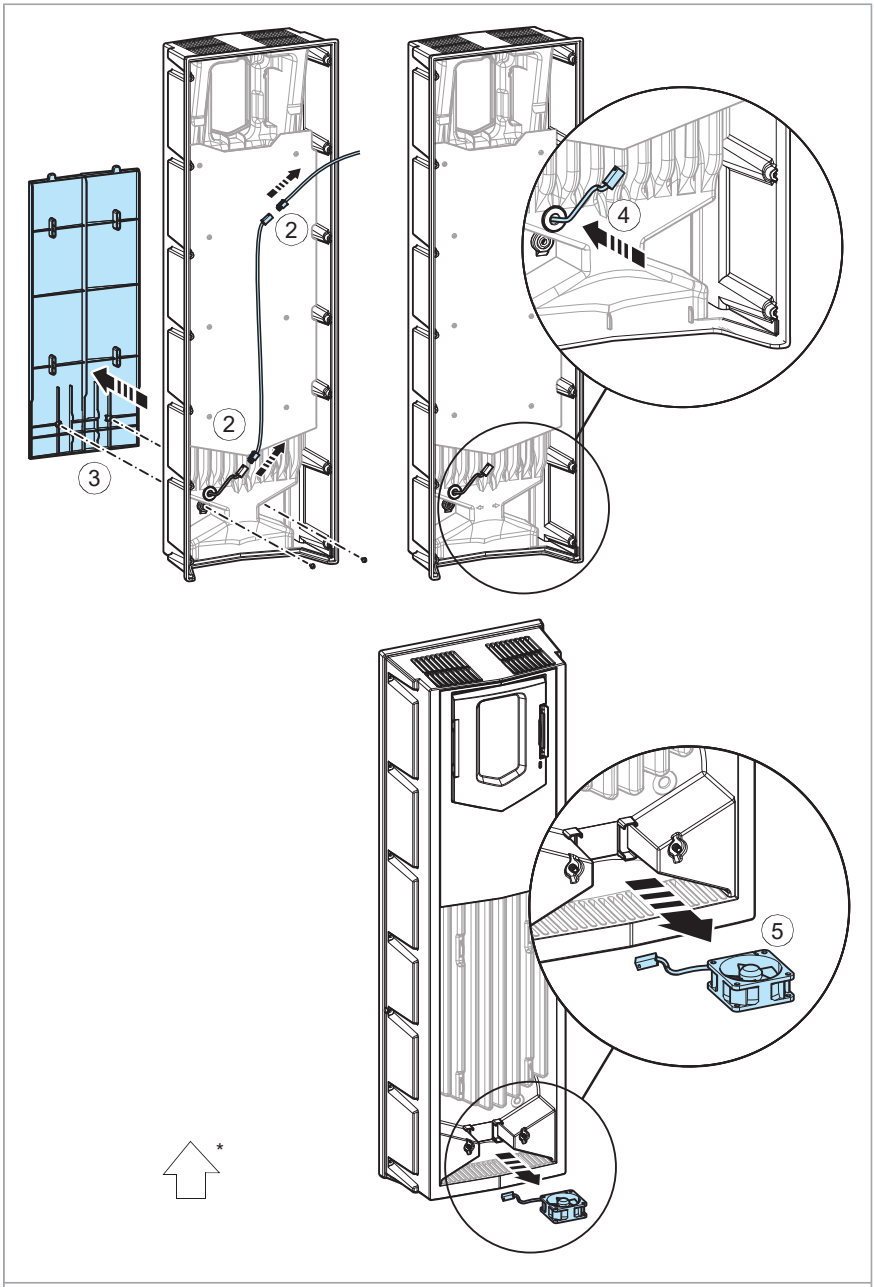

*Fan arrow must point up

Replacing the drive

WARNING! Use protection devices given in the technical data of this manual. ABB does not recommend use of gG fuses for frames R6 and R8.

Capacitors

The intermediate DC circuit of the drive contains several electrolytic capacitors. Operating time, load, and surrounding air temperature have an effect on the life of the capacitors. Capacitor life can be extended by decreasing the surrounding air temperature.

Capacitor failure is usually followed by damage to the unit and an input cable fuse failure, or a fault trip. If you think that any capacitors in the drive have failed, contact ABB.

Reforming the capacitors

The capacitors must be reformed if the drive has not been powered (either in storage or unused) for a year or more. The manufacturing date is on the type designation label. For information on reforming the capacitors, refer to Capacitor reforming instructions (3BFE64059629 [English]).

Control panel

See ACS-AP-I, -S, -W and ACH-AP-H, -W Assistant control panels user's manual (3AUA0000085685 [English]).

Drive LEDs

There is a green POWER and a red FAULT LED visible when the control panel is removed. If a control panel is attached to the drive, switch to remote control otherwise a fault will be generated, and then remove the panel to be able to see the LEDs. See the firmware manual on how to switch to remote control.

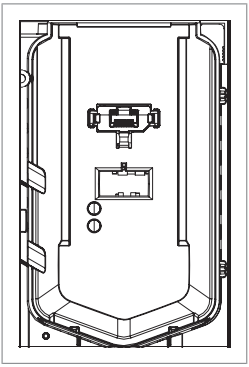

The table below describes the drive LED indications.

LEDs off	LED lit and steady		LED blinking	
No power	Green (POWER)	Power supply on the unit OK	Green (POWER)	Blinking: Drive in an alarm state Blinking for one second: Drive selected on the control panel when multiple drives are connected to the same panel bus.
	Red (FAULT)	Active fault in the drive. To reset the fault, press RESET from the control panel or switch off the drive power.	Red (FAULT)	Active fault in the drive. To reset the fault, switch off the drive power.

Control unit

Replacing the memory unit of ZCU-12

After replacing a control unit, you can retain the existing parameter settings by transferring the memory unit from the defective control unit to the new control unit. After power-up, the drive will scan the memory unit. This can take several minutes.

WARNING!
Do not remove or insert the memory unit when the control unit is powered.

1. Stop the drive and do the steps in section Electrical safety precautions (page 18) before you start the work.
2. Pull the clip at the side of the memory up.

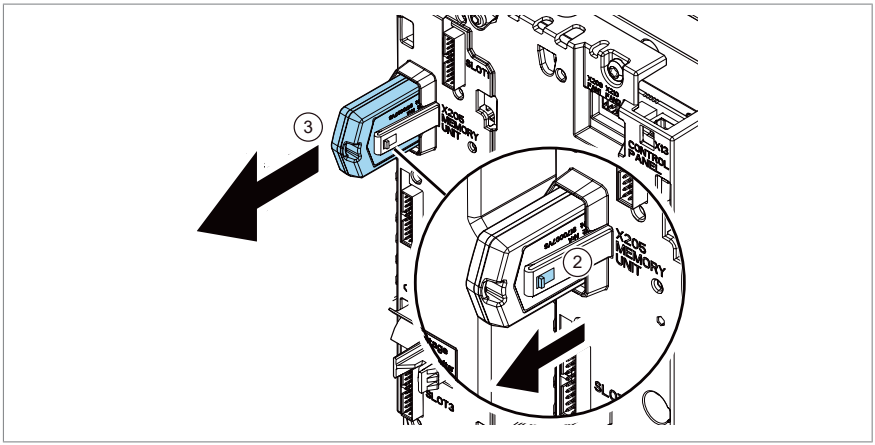

3. Take the unit off.
4. Install the unit in reverse order.

Replacing the ZCU-12 control unit battery

The control unit battery can be changed with the help of the battery ejector (a in the drawing below). The ejector is included on the battery slot. The battery is of type CR2032.

1. Stop the drive and do the steps in section Electrical safety precautions (page 18) before you start the work.
2. Move the battery ejector into the battery slot on the battery.
3. Carefully pull the battery out of the battery holder.
4. Carefully put a new CR2032 battery into the battery holder.

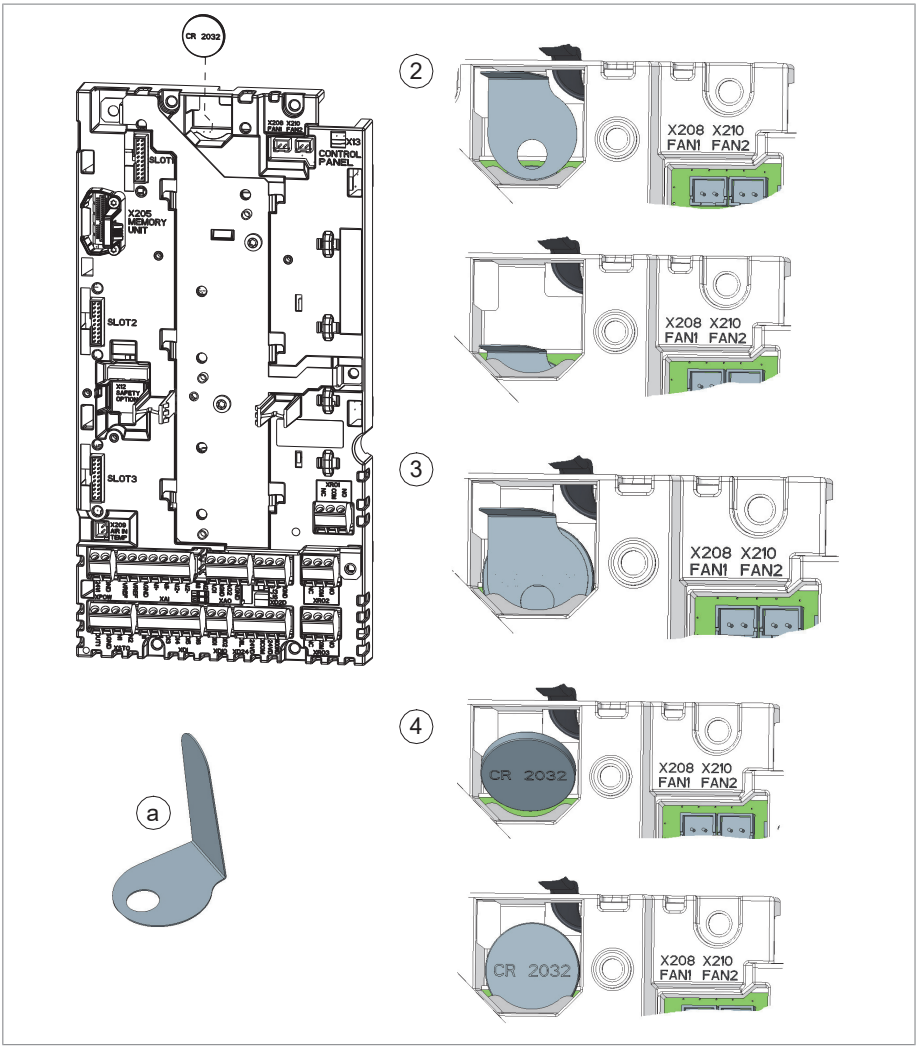

Replacing safety functions modules (FSO-12, option +Q973 and FSO-21, option +Q972)

Do not repair safety functions modules. Replace a faulty module with a new one as described in section Installation of safety functions modules (page 104).

Functional safety components

The mission time of functional safety components is 20 years which equals the time during which failure rates of electronic components remain constant. This applies to the components of the standard Safe torque off circuit as well as any modules, relays and, typically, any other components that are part of functional safety circuits.

The expiry of mission time terminates the certification and SIL/PL classification of the safety function. The following options exist:

- Renewal of the whole drive and all optional functional safety module(s) and components.
- Renewal of the components in the safety function circuit. In practice, this is economical only with larger drives that have replaceable circuit boards and other components such as relays.

Note that some of the components may already have been renewed earlier, restarting their mission time. The remaining mission time of the whole circuit is however determined by its oldest component.

Contact your local ABB service representative for more information.

12

Technical data

Contents of this chapter

This chapter contains the technical specifications of the drive including the ratings, sizes and technical requirements, provisions for fulfilling the requirements for CE, UL and other approval marks.

Marine type-approved drives (option +C132)

See ACS880-01…, ACS880-04…, ACS880-11…, ACS880-31…, ACS880-14… and ACS880-34… +C132 marine type-approved drives supplement (3AXD50000010521 [English]) for the ratings, marine-specific data and reference to valid marine type approvals.

Electrical ratings

The nominal ratings for the drive with 50 Hz and 60 Hz supply are given below.

IEC RATINGS										
ACS880-11-	**Frame size**	**Input current[1)]**	**Output ratings**							
			Nominal use				**Light-duty use**		**Heavy-duty use**	
		I_1	I_{max}	S_n	I_2	P_n	I_{Ld}	P_{Ld}	I_{Hd}	P_{Hd}
		A	**A**	**kVA**	**A**	**kW**	**A**	**kW**	**A**	**kW**
U_n = 400 V										
09A4-3	R3	8	13.6	6.9	10.0	4.0	9.5	4.0	8.0	3.0
12A6-3	R3	10	17.0	8.9	12.9	5.5	12.0	5.5	10.0	4.0
017A-3	R3	14	21.9	12	17.0	7.5	16	7.5	12.9	5.5

IEC RATINGS										
ACS880-11-	Frame size	Input current[1)]	Output ratings							
			Nominal use				Light-duty use		Heavy-duty use	
		I_1	I_{max}	S_n	I_2	P_n	I_{Ld}	P_{Ld}	I_{Hd}	P_{Hd}
		A	A	kVA	A	kW	A	kW	A	kW
025A-3	R3	20	28.8	17	25	11	24	11	17	7.5
032A-3	R6	27	42.5	22	32	15	30	15	25	11
038A-3	R6	33	54.4	26	38	18.5	36	18.5	32	15.0
045A-3	R6	40	64.6	31	45	22	43	22	38	18.5
061A-3	R6	51	76.5	42	61	30	58	30	45	22
072A-3	R6	63	103.7	50	72	37	68	37	61	30
087A-3	R6	76	122.4	60	87	45	83	45	72	37
105A-3	R8	88	148	73	105	55	100	55	87	45
145A-3	R8	120	178	100	145	75	138	75	105	55
169A-3	R8	144	247	117	169	90	161	90	145	75
206A-3	R8	176	287	143	206	110	196	110	169	90
U_n = 500 V										
07A6-5	R3	7	9.5	6.6	7.6	4.0	7.2	4.0	5.2	2.2
11A0-5	R3	9	13.8	9.5	11.0	5.5	10.4	5.5	7.6	4.0
014A-5	R3	12	18.7	12	14	7.5	13	7.5	11.0	5.5
021A-5	R3	17	26.3	18	21	11.0	19	11.0	14	7.5
027A-5	R6	24	35.7	23	27	15.0	26	15.0	21	11.0
034A-5	R6	29	45.9	29	34	18.5	32	18.5	27	15.0
040A-5	R6	34	57.8	35	40	22.0	38	22.0	34	18.5
052A-5	R6	44	68.0	45	52	30.0	49	30.0	40	22.0
065A-5	R6	54	88.4	56	65	37.0	62	37.0	52	30.0
077A-5	R6	66	110.5	67	77	45.0	73	45.0	65	37.0
101A-5	R8	71	148	87	101	55.0	91	55.0	77	45.0
124A-5	R8	96	178	107	124	75.0	118	75.0	96	55.0
156A-5	R8	115	247	135	156	90.0	148	90.0	124	75.0
180A-5	R8	141	287	156	180	110.0	171	110.0	156	90.0
3AXD00000588487										

UL (NEC) RATINGS								
ACS880-11-	Frame size	Input current[1)]	Max. current	Output ratings				
				App. power	Light-duty use		Heavy-duty use	
		I_1	I_{max}	S_n	I_{Ld}	P_{Ld}	I_{Hd}	P_{Hd}
		A	A	kVA	A	hp	A	hp
U_n = 480 V								
07A6-5	R3	7.0	9.5	6.6	7.6	5.0	5.2	3.0
11A0-5	R3	9.0	13.8	9.5	11.0	7.5	7.6	5.0
014A-5	R3	12.0	18.7	12	14.0	10.0	11.0	7.5
021A-5	R3	17.0	26.3	18	21.0	15.0	14.0	10.0
027A-5	R6	24.0	35.7	23	27.0	20.0	21.0	15.0
034A-5	R6	29.0	45.9	29	34.0	25.0	27.0	20.0
040A-5	R6	34.0	57.8	35	40.0	30.0	34.0	25.0
052A-5	R6	44.0	68.0	45	52.0	40.0	40.0	30.0
065A-5	R6	54.0	88.4	56	65.0	50.0	52.0	40.0
077A-5	R6	66.0	110.5	67	77.0	60.0	65.0	50.0
101A-5	R8	74.0	148	87	96.0	75.0	77.0	60.0
124A-5	R8	100.0	178	107	124.0	100.0	96.0	75.0
156A-5	R8	120.0	247	135	156.0	125.0	124.0	100.0
180A-5	R8	147.0	287	156	180.0	150.0	156.0	125.0
								3AXD00000588487

[1)] When the DC voltage is boosted, the drive can be drawing more input current than what is shown on the type designation label. This is the case when the motor is running continuously at or near the field weakening area and the drive is running at or near nominal load. It can be a result of certain combinations of DC voltage boost levels and drive-type-specific derating curves.

The rise in input current can heat the input cable and fuses. To avoid heating, select an input cable and fuses according to the increased input current caused by the DC voltage boost. For more information, refer to ACS880-11, ACS880-31, ACS880-14, ACS880-34, ACS880-17, ACS880-37 drives product note on voltage boost (3AXD50000691838 [English]).

U_n	Nominal voltage of the drive
I_1	Nominal input current (rms) at 40 °C (104 °F)
I_{max}	Maximum output current. Available for 10 seconds at start, otherwise as long as allowed by drive temperature. 140% … 200% of I_{Hd}, depending on power rating.
I_2	Continuous rms output current. No overload capability at 40 °C (104 °F).
P_n	Typical motor power in no-overload use
S_n	Apparent power (no overload)
I_{Ld}	Continuous rms output current allowing 10% overload for 1 minute every 5 minutes

P_{Ld}	Typical motor power for light-overload use
I_{Hd}	Continuous rms output current allowing 50% overload for 1 minute every 5 minutes
P_{Hd}	Typical motor power for heavy-duty use

Note: To achieve the rated motor power given in the table, the rated current of the drive must be higher than or equal to the rated motor current. The power ratings apply to most IEC 34 motors at the nominal voltage of the drive.

ABB recommends to select the drive, motor and gear combination for the required motion profile with the DriveSize dimensioning tool available from ABB.

Deratings

Surrounding air temperature derating

Temperature range	Derating
All drives except IP55 (UL Type 12) drive type -206A-3	
up to +40 °C up to +104 °F	No derating
+40…+55 °C +104…+131 °F	Derate 1% for every 1 °C (1.8 °F): Calculate the output by multiplying the current given in the rating table by the derating factor (k, in the diagram below). 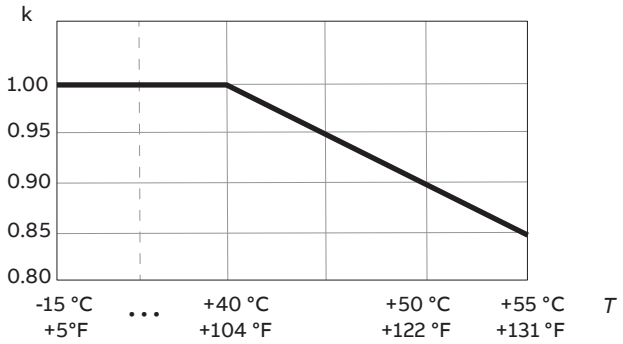

Temperature range	Derating
IP55 (UL Type 12) drive type -206A-3	
up to +40 °C up to +104 °F	No derating
+40 … +55 °C +104 … +131 °F	In the temperature range +40 … +45 °C, derate 1% for every added 1 °C (1.8 °F). In the temperature range +45 … +55 °C, derate 1.5% for every added 1 °C (1.8 °F). Calculate the output by multiplying the current given in the rating table by the derating factor (*k*, in the diagram below). 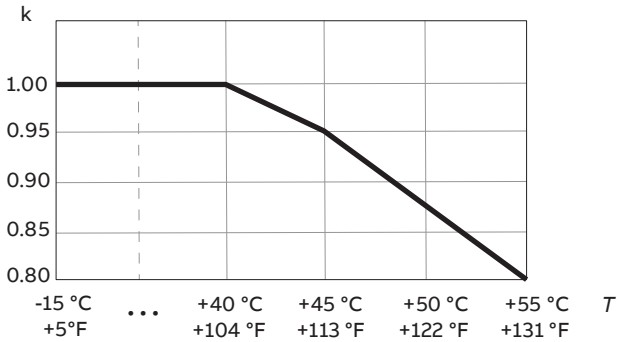

Note: For surrounding air temperatures above +40 °C (+104 °F), the power cables must be rated for +90 °C (+194 °F) minimum.

Altitude derating

At altitudes above 1000 m (3281 ft) above sea level, the output current derating is 1 percentage point for every added 100 m (328 ft). For example, the derating factor for 1500 m (4921 ft) is 0.95. The maximum permitted installation altitude is given in the technical data.

If the surrounding air temperature is less than +40 °C (104 °F), the derating can be reduced by 1.5 percentage points for every 1 °C (1.8 °F) reduction in temperature. A few altitude derating curves are shown below.

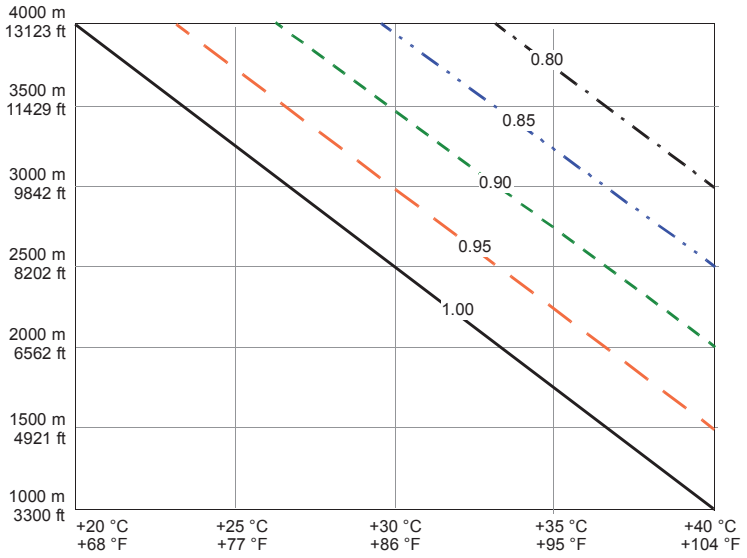

———	Derating factor 1.00
— — —	Derating factor 0.95
- - - -	Derating factor 0.90
—·—·—	Derating factor 0.85
— · — · —	Derating factor 0.80

For a more accurate derating, use the DriveSize PC tool.

Example 1: Drive type -045A-3, I_2 = 45 A, altitude 4000 m and temperature +40 °C. The derating 1% for 30 × 100 m is 30%. The derated current = 45 A - 0.3 × 45 A = 31.5 A.

Example 2: Drive type -045A-3, I_2 = 45 A, altitude 4000 m and temperature +30 °C. The derating factor is 1 - 1.5% × 10 = 0.85. The derated current = 0.85 × 45 A = 38.25 A.

Deratings for special settings in the drive control program

Ex motor, sine filter, low noise

Deratings are needed in these cases:

- drive is used with an ABB motor for explosive atmospheres (Ex) and "EX motor" in parameter 95.15 Special HW settings is enabled

- sine filter given in the selection table in chapter Filters is used and "ABB Sine filter" in parameter 95.15 Special HW settings is enabled
- "Low noise optimization" is selected in parameter 97.09 Switching freq mode.

Note: If Ex motors are used together with sine filters, "EX motor" in parameter 95.15 Special HW settings is disabled and "ABB Sine filter" in parameter 95.15 Special HW settings is enabled. Obey the instructions of the motor manufacturer.

With other than recommended sine filters and non-ABB Ex motors, contact ABB.

ACS880-11-...	Output ratings with selection EX motor of parameter 95.15 Special HW settings				ABB Sine filter			
	Nominal use		Light-duty use	Heavy-duty use	Nominal use		Light-duty use	Heavy-duty use
	I_2	P_n	I_{Ld}	I_{Hd}	I_2	P_n	I_{Ld}	I_{Hd}
	A	kW	A	A	A	kW	A	A
U_n = 400 V								
09A4-3	10.0	4.0	9.5	8.0	9.2	4.0	8.7	7.2
12A6-3	12.9	5.5	12	10.0	12.1	6	11.5	9.2
017A-3	17	8	16.2	12.6	16	8	15.2	12.1
025A-3	25	11	23.8	17	24	11	22.8	16
032A-3	32	15	30.4	25	31	15	29.5	23
038A-3	38	18.5	36.1	32	37	18	35.2	31
045A-3	45	22	42.8	38	43	22	40.9	36
061A-3	61	30	58	45	58	30	55.1	43
072A-3	72	37	68.4	61	64	30	60.8	58
087A-3	87	45	82.7	72	77	37	73.2	64
105A-3	103	55	98	85	102	55	98	85
145A-3	142	75	135	103	141	75	135	102
169A-3	166	90	158	142	165	90	157	141
206A-3	202	110	192	166	201	110	191	165
U_n = 500 V								
07A6-5	7.6	4.0	7.2	5.2	7.0	3	6.7	4.8
11A0-5	11.0	5.5	10.4	7.6	10.2	4	9.7	7.0
014A-5	14	7.5	13	11	13	6	12.4	10.2
021A-5	21	11	19	14	19	8	18.1	13
027A-5	27	15	26	21	25	11	23.8	19
034A-5	34	18.5	32	27.0	31	15	29.5	25
040A-5	40	22	38	34	34	18	32.3	31
052A-5	52	30	49	40	44	22	41.8	34
065A-5	65	37	62	52	52	30	49.4	44
077A-5	77	45	73	65	61	37	58	52

ACS880-11-...	Output ratings with selection EX motor of parameter 95.15 Special HW settings				ABB Sine filter			
	Nominal use		Light-duty use	Heavy-duty use	Nominal use		Light-duty use	Heavy-duty use
	I_2	P_n	I_{Ld}	I_{Hd}	I_2	P_n	I_{Ld}	I_{Hd}
	A	kW	A	A	A	kW	A	A
101A-5	99	55	89	75	98	55	89	75
124A-5	122	75	116	94	121	75	115	94
156A-5	153	90	145	122	152	90	144	121
180A-5	176	110	168	153	176	110	167	152

Definitions

U_n Nominal voltage of the drive
I_2 Continuous rms output current. No overload capability at 40 °C (104 °F)
P_n Typical motor power in no-overload use
I_{Ld} Continuous rms output current allowing 10% overload for 1 minute every 5 minutes
I_{Hd} Continuous rms output current allowing 50% overload for 1 minute every 5 minutes
P_{Hd} Typical motor power in heavy-duty use
The ratings apply at an ambient temperature of 40 °C (104 °F).

ACS880-11-	Output ratings with selection Low noise optimization of parameter 97.09 Switching freq mode		
	Nominal use	Light-duty use	Heavy-duty use
	I_2	I_{Ld}	I_{Hd}
	A	A	A
U_n = 400 V			
09A4-3	8.5	8.1	6.5
12A6-3	11.3	10.7	8.5
017A-3	15	14.3	11.3
025A-3	22	20.9	15.0
032A-3	30	28.5	22
038A-3	35	33.3	30
045A-3	41	39	35
061A-3	56	53.2	41
072A-3	56	53.2	47
087A-3	67	63.7	56
105A-3	105	100	87
145A-3	145	138	105
169A-3	169	161	145
206A-3	206	196	169

ACS880-11-	Output ratings with selection Low noise optimization of parameter 97.09 Switching freq mode		
	Nominal use	Light-duty use	Heavy-duty use
	I_2	I_{Ld}	I_{Hd}
	A	A	A
U_n = 500 V			
07A6-5	6.5	6.2	4.4
11A0-5	9.4	8.9	6.5
014A-5	12.0	11.4	9.4
021A-5	18.0	17.1	12.0
027A-5	23.0	21.9	18.0
034A-5	29	27.6	23
040A-5	29	27.6	23
052A-5	37	35.2	29
065A-5	39	37.1	33
077A-5	46	43.7	39
101A-5	101	91	77
124A-5	124	118	96
156A-5	156	148	124
180A-5	180	171	156

U_n	Nominal voltage of the drive
I_2	Continuous rms output current. No overload capability at 40 °C (104 °F)
I_{Ld}	Continuous rms output current allowing 10% overload for 1 minute every 5 minutes
I_{Hd}	Continuous rms output current allowing 50% overload for 1 minute every 5 minutes

Note: The ratings apply at an ambient temperature of 40 °C (104 °F).

High speed mode

Selection "High speed mode" of parameter 95.15 Special HW settings improves control performance at high output frequencies. ABB recommends it to be selected with output frequency of 120 Hz and above.

This table gives the drive ratings for the maximum output frequency when "High speed mode" in parameter 95.15 Special HW settings is enabled. With smaller output frequencies, the current derating is less. Contact ABB for operation above the recommended maximum output frequency or for the output current derating with output frequencies above 120 Hz and below the maximum output frequency.

At the 120 Hz output frequency: no derating.

ACS880-11-	Output ratings with selection High speed mode of parameter 95.15 Special HW settings			
	Maximum output frequency	Nominal use	Light-duty use	Heavy-duty use
	f_{max}	I_N	I_{Ld}	I_{Hd}
	Hz	A	A	A
U_n = 400 V				
09A4-3	500	8.5	8.1	6.5
12A6-3	500	11.3	10.7	8.5
017A-3	500	15	14.3	11.3
025A-3	500	22	20.9	15.0
032A-3	500	30	28.5	22
038A-3	500	35	33.3	30
045A-3	500	41	39	35
061A-3	500	56	53.2	41
072A-3	500	56	53.2	47
087A-3	500	67	63.7	56
105A-3	500	105	100	87
145A-3	500	145	138	105
169A-3	500	156	148	122
206A-3	500	192	180	155
U_n = 500 V				
07A6-5	500	6.5	6.2	4.4
11A0-5	500	9.4	8.9	6.5
014A-5	500	12.0	11.4	9.4
021A-5	500	18.0	17.1	12.0
027A-5	500	23.0	21.9	18.0
034A-5	500	29	27.6	23
040A-5	500	29	27.6	23
052A-5	500	37	35.2	29
065A-5	500	39	37.1	33
077A-5	500	46	43.7	39
101A-5	500	101	91	77
124A-5	500	124	118	96
156A-5	500	144	136	87
180A-5	500	169	160	147

U_n	Nominal voltage of the drive
f_{max}	Maximum output frequency with High speed mode

I_n	Continuous rms output current. No overload capability at 40 °C (104 °F).
I_{Ld}	Continuous rms output current allowing 10% overload for 1 minute every 5 minutes
I_{Hd}	Continuous rms output current allowing 50% overload for 1 minute every 5 minutes

Derating for output voltage boost

The drive can output a higher motor voltage than the supply voltage. This can require derating of the drive output power depending on the difference between the supply voltage and the output voltage to the motor for continuous operation.

400 V and 500 V drives

This drawing shows the required derating for -3 and -5 (400 V and 500 V) drive types.

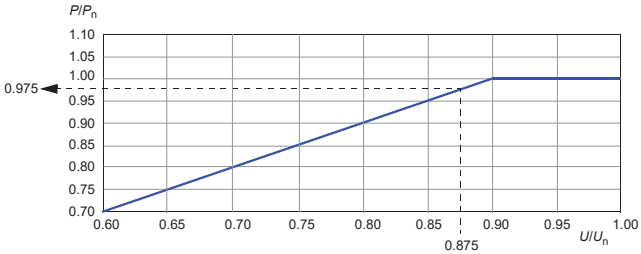

Example 1: P_n for ACS880-11-045A-3 is 22 kW. The supply voltage (U) is 350 V.

U/U_n = 350 V / 400 V = 0.875. From the graph we can see that P/P_n = 0.975.

The derated power P = 0.975 × 22 kW = 21.45 kW.

To boost the output voltage to correspond the nominal supply voltage 400 V, increase the DC voltage to 400 V × √2 = 567 V.

Example 2: P_n for ACS880-11-101A-5 is 55 kW. The supply voltage (U) is 450 V.

U/U_n = 450 V / 500 V = 0.9. From the graph we can see that P/P_n = 1.00.

The derated power P = 1.00 × 55 kW = 55 kW.

To boost the output voltage to correspond the nominal supply voltage 500 V, increase the DC voltage to 500 V × √2 = 707 V.

U	Input voltage of the drive
U_n	Nominal supply voltage of the drive. For -3 types U_n = 400 V, for -5 types U_n = 500 V. For -7 types U_n = 690 V but 575 V when P_n refers to nominal power ratings in the UL (NEC) 575 V rating table.
P	Derated output power of the drive
P_n	Nominal power rating of the drive

For more information, see ACS880-11, ACS880-31, ACS880-14, ACS880-34, ACS880-17, ACS880-37 drives product note on voltage boost (3AXD50000691838 [English]).

Fuses (IEC)

Fuses protect the input cable in short-circuit situations. They also restrict drive damage and prevent damage to adjoining equipment in case of a short-circuit inside the drive. ABB recommends the high speed aR fuses specified below. The gG fuses can be used for frame R3 if they operate rapidly enough (max. 0.1 seconds). The operating time depends on the supply network impedance and the cross-sectional area and length of the supply cable. Obey the local regulations.

Note: Fuses from other manufacturers can be used if they meet the ratings and the melting curve of the fuse does not exceed the melting curve of the fuse mentioned in the table.

aR fuses DIN 43653 stud-mount

ACS880-11-...	Min. short-circuit current[1)]	Input current	Ultrarapid (aR) fuses (stud-mount, one fuse per phase)				
			Nominal current	I^2t	Voltage rating	Bussmann type	Type DIN 43653
	A	A	A	A^2s	V		
3-phase U_n = 400 V							
09A4-3	70	8	25	130	690	170M1311	000
12A6-3	70	10	25	130	690	170M1311	000
017A-3	70	14	25	130	690	170M1311	000
025A-3	100	20	32	270	690	170M1312	000
032A-3	110	27	40	460	690	170M1313	000
038A-3	210	33	63	1450	690	170M1315	000
045A-3	300	40	80	2550	690	170M1316	000
061A-3	300	51	80	2550	690	170M1316	000
072A-3	400	63	100	4650	690	170M1317	000
087A-3	400	76	125	8500	690	170M1318	000
105A-3	700	88	160	16000	690	170M1319	000
145A-3	970	120	200	28000	690	170M1320	000
169A-3	1100	144	250	42000	690	170M2618	00
206A-3	1600	176	315	68500	690	170M2619	00
3-phase U_n = 500 V							
07A6-5	32	7.0	10	25.5	690	170M1308	000
11A0-5	42	9.0	16	48	690	170M1309	000
014A-5	65	12.0	25	130	690	170M1311	000
021A-5	65	17.0	25	130	690	170M1311	000

ACS880-11-...	Min. short-circuit current[1)]	Input current	Ultrarapid (aR) fuses (stud-mount, one fuse per phase)				
			Nominal current	I^2t	Voltage rating	Bussmann type	Type DIN 43653
	A	A	A	A^2s	V		
027A-5	120	24.0	40	460	690	170M1313	000
034A-5	170	29.0	63	1450	690	170M1315	000
040A-5	170	34.0	63	1450	690	170M1315	000
052A-5	280	44.0	80	2550	690	170M1316	000
065A-5	400	54.0	100	4650	690	170M1317	000
077A-5	400	66.0	125	8500	690	170M1318	000
101A-5	700	71.0	160	16000	690	170M1319	000
124A-5	970	96.0	200	28000	690	170M1320	000
156A-5	1100	115.0	250	42000	690	170M2618	00
180A-5	1600	141.0	315	68500	690	170M2619	00

[1)] Minimum short-circuit current of the electrical power system

aR fuses DIN 43620 blade style

ACS880-11-...	Min. short-circuit current[1)]	Input current	Ultra-rapid (aR) fuses (blade style, one fuse per phase)				
			Nominal current	I^2t	Voltage rating	Bussmann type	Type DIN 43620
	A	A	A	A^2s	V		
3-phase U_n = 400 V							
09A4-3	65	8	25	130	690	170M1561	000
12A6-3	65	10	25	130	690	170M1561	000
017A-3	120	14	40	460	690	170M1563	000
025A-3	120	20	40	460	690	170M1563	000
032A-3	170	27	63	1450	690	170M1565	000
038A-3	170	33	63	1450	690	170M1565	000
045A-3	280	40	80	2550	690	170M1566	000
061A-3	380	51	100	4650	690	170M1567	000
072A-3	500	63	125	8500	690	170M1568	000
087A-3	700	76	160	16000	690	170M1569	000
105A-3	1200	88	315	46500	690	170M3817	1
145A-3	1200	120	315	46500	690	170M3817	1
169A-3	1900	144	450	105000	690	170M5809	2
206A-3	2200	176	500	145000	690	170M5810	2
3-phase U_n = 500 V							
07A6-5	65	7.0	25	130	690	170M1561	000
11A0-5	65	9.0	25	130	690	170M1561	000

ACS880-11-...	Min. short-circuit current[1]	Input current	Ultra-rapid (aR) fuses (blade style, one fuse per phase)				
			Nominal current	I^2t	Voltage rating	Bussmann type	Type DIN 43620
	A	A	A	A^2s	V		
014A-5	120	12.0	40	460	690	170M1563	000
021A-5	120	17.0	40	460	690	170M1563	000
027A-5	170	24.0	63	1450	690	170M1565	000
034A-5	170	29.0	63	1450	690	170M1565	000
040A-5	280	34.0	80	2550	690	170M1566	000
052A-5	380	44.0	100	4650	690	170M1567	000
065A-5	500	54.0	125	8500	690	170M1568	000
077A-5	700	66.0	160	16000	690	170M1569	000
101A-5	1000	71.0	250	28500	690	170M3816	1
124A-5	1200	96.0	315	46500	690	170M3817	1
156A-5	1600	115.0	400	74000	690	170M5808	2
180A-5	2200	141.0	500	155000	690	170M5810	2

[1] Minimum short-circuit current of the electrical power system

gG fuses DIN 43620 blade style

gG fuses can be used for frame R3 if they operate rapidly enough (max. 0.1 seconds). ABB recommends, however, aR fuses. **gG fuses are not allowed for frames R6 and R8**.

ACS880-11-...	Min. short-circuit current[1]	Input current	gG fuses (one fuse per phase)				
			Nominal current	*I*2t	Voltage rating	ABB type	Size DIN 43620
	A	A	A	A2s	V		
3-phase U_n = 400 V							
09A4-3	120	8.0	16	700	500	OFAF000H16	000
12A6-3	120	10.0	16	700	500	OFAF000H16	000
017A-3	200	14.0	25	2500	500	OFAF000H25	000
025A-3	250	20.0	32	4500	500	OFAF000H32	000
3-phase U_n = 500 V							
07A6-5	120	7.0	16	700	500	OFAF000H16	000
11A0-5	120	9.0	16	700	500	OFAF000H16	000
014A-5	200	12.0	25	2500	500	OFAF000H25	000
021A-5	250	17.0	32	4500	500	OFAF000H32	000

[1] Minimum short-circuit current of the installation

Quick guide for selecting between gG and aR fuses

The combinations (cable size, cable length, transformer size and fuse type) in this table fulfill the minimum requirements for the correct operation of the fuse. Use this table to select between gG and aR fuses or calculate the short-circuit current of the installation as described in section Calculating the short-circuit current of the installation (page 177).

ACS880-11-...	Cable type		Supply transformer minimum apparent power S_n (kVA)					
	Copper	Aluminum	Maximum cable length with gG fuses			Maximum cable length with aR fuses		
	mm^2	mm^2	10 m	50 m	100 m	10 m	100 m	200 m
U_n = 400 V								
09A4-3	3×1.5	-	5.8	6.2	8.4	3.1	3.4	5.0
12A6-3	3×1.5	-	5.8	6.2	8.4	3.1	3.4	5.0
017A-3	3×6	-	9.6	9.8	10	5.8	5.9	6.2
025A-3	3×6	-	12	12	13	5.8	5.9	6.2
U_n = 500 V								
07A6-5	3×1.5	-	7.2	7.5	8.9	3.9	4.1	5.0
11A0-5	3×1.5	-	7.2	7.5	8.9	3.9	4.1	5.0
014A-5	3×6	-	12	12	12	7.2	7.3	7.6
021A-5	3×6	-	15	15	16	7.2	7.3	7.6

Calculating the short-circuit current of the installation

Make sure that the short-circuit current of the installation is at least the value given in the fuse table.

The short-circuit current of the installation can be calculated as follows:

$$I_{k2\text{-}ph} = \frac{U}{2 \cdot \sqrt{R_c^2 + (Z_k + X_c)^2}}$$

where

$I_{k2\text{-}ph}$	Short-circuit current in symmetrical two-phase short-circuit
U	Network line-to-line voltage (V)
R_c	Cable resistance (ohm)
Z_k	$Z_k = z_k \cdot U_n^2 / S_n$ = transformer impedance (ohm)
z_k	Transformer impedance (%)
U_n	Transformer rated voltage (V)
S_n	Nominal apparent power of the transformer (kVA)
X_c	Cable reactance (ohm)

Calculation example

Drive:

- ACS880-11-145A-3
- supply voltage = 410 V

Transformer:

- rated power S_N = 600 kVA
- rated secondary voltage (supply for drive supply) U_N = 430 V
- transformer impedance z_k = 7.2%

Supply cable:

- length = 170 m
- resistance/length = 0.398 ohm/km
- reactance/length = 0.082 ohm/km.

$$Z_k = z_k \cdot \frac{U_N^2}{S_N} = 0.072 \cdot \frac{(430\ \text{V})^2}{600\ \text{kVA}} = 22.19\ \text{mohm}$$

$$R_c = 170\ \text{m} \cdot 0.398\ \frac{\text{ohm}}{\text{km}} = 67.66\ \text{mohm}$$

$$X_c = 170\ \text{m} \cdot 0.082\ \frac{\text{ohm}}{\text{km}} = 13.94\ \text{mohm}$$

$$I_{k2\text{-ph}} = \frac{410\ \text{V}}{2 \cdot \sqrt{(67.66\ \text{mohm})^2 + (22.19\ \text{mohm} + 13.94\ \text{mohm})^2}} = 2.7\ \text{kA}$$

The calculated short-circuit current 2.7 kA is higher than the minimum short-circuit current of the drive aR fuse type 170M1320 (970 A). -> The 690 V aR fuse (Bussman 170M1320) can be used.

Fuses (UL)

The UL Listed fuses in this manual are required for branch circuit protection and required per NEC. The drives are suitable for use on a circuit capable of delivering not more than 100 kA symmetrical amperes (rms) at 480 V maximum when protected by the fuses described below.

ABB recommends Class T fuses listed below. Also allowed are UL Listed 248-8 Class J fast acting, time delay, and high speed fuses, 248-4 Class CC fast acting fuses and 248-17 Class CF fast acting and time delay fuses of the same nominal voltage and current rating.

Refer to notes below the tables.

ACS880-11-...	Input current	UL (one fuse per phase)			
		Nominal current	Voltage rating	Bussmann type	UL class
	A	A	V		
3-phase *U*n = 480 V					
07A6-5	7.0	15	600	JJS-15	T
11A0-5	9.0	20	600	JJS-20	T
014A-5	12.0	25	600	JJS-25	T
021A-5	17.0	35	600	JJS-35	T
027A-5	24.0	40	600	JJS-40	T
034A-5	29.0	50	600	JJS-50	T
040A-5	34.0	60	600	JJS-60	T
052A-5	44.0	80	600	JJS-80	T
065A-5	54.0	90	600	JJS-90	T
077A-5	66.0	110	600	JJS-110	T
101A-5	74.0	150	600	JJS-150	T
124A-5	100.0	200	600	JJS-200	T
156A-5	120.0	225	600	JJS-225	T
180A-5	147.0	300	600	JJS-300	T

1. Fuses are required as part of the installation, are not included in the base drive configuration and must be provided by others.
2. Fuses with a higher current rating than specified must not be used.
3. The UL listed fuses recommended by ABB are the required branch circuit protection per NEC. Circuit breakers listed in section Circuit breakers (UL) are also acceptable as branch circuit protection.
4. The recommended size or smaller UL listed 248 fast acting, time delay, or high speed fuses must be used to maintain the UL listing of the drive. Additional protection can be used. Refer to local codes and regulations.
5. A fuse of a different class can be used at the high fault rating where the I_{peak} and I^2t of the new fuse is not greater than that of the specified fuse.
6. UL listed 248 fast acting, time delay, or high speed fuses from other manufacturers can be used if they meet the same class and rating requirements specified in the rules above.
7. When installing a drive, always follow ABB installation instructions, NEC requirements and local codes.
8. Alternative fuses can be used if they meet certain characteristics. For acceptable fuses, see the manual supplement (3AXD50000645015).

Circuit breakers (IEC)

ABB miniature and molded case circuit breakers

This section does not apply to the North American market. See section Circuit breakers (UL).

The protective characteristics of circuit breakers depend on the type, construction and settings of the breakers. There are also limitations pertaining to the short-circuit capacity of the supply network.

WARNING!
Due to the inherent operating principle and construction of circuit breakers, independent of the manufacturer, hot ionized gases can escape from the breaker enclosure in case of a short-circuit. To make sure of safe use, pay special attention to the installation and placement of the breakers. Obey the manufacturer's instructions.

Note:

- Ratings in the tables are maximum for the given circuit breaker frame size.
- Breakers of the same frame size and interrupting rating with lower current ratings are also allowed.
- Using a circuit breaker with a lower KAIC rating is not allowed even if the available SC current is less than 65kA.
- For the ABB circuit breaker configurator refer to: https://lowvoltage-configurator.tnb.com/configurator/#/config/tmax_xt

You can use the circuit breakers listed below. Other circuit breakers can be used with drive if they provide the same electrical characteristics. ABB does not assume any liability whatsoever for the correct function and protection with circuit breakers not listed below. Furthermore, if the recommendations given by ABB are not obeyed, the drive can experience problems that the warranty does not cover.

Note: Circuit breakers are not yet validated as protection device for R6 frame "HW V2". R6 frame "HW V2" variants must use fuses. "HW V2" is shown in the type designation label.

ACS880-11-...	Frame	ABB moulded case circuit breaker (Tmax)	
		Type	kA [1)]
U_n = 400 V			
09A4-3	R3	XT2H 160 EKIP DIP LS/I IN 25	65
12A6-3	R3	XT2H 160 EKIP DIP LS/I IN 25	65
017A-3	R3	XT2H 160 EKIP DIP LS/I IN 63	65

ACS880-11-...	Frame	ABB moulded case circuit breaker (Tmax)	
		Type	kA [1]
025A-3	R3	XT2H 160 EKIP DIP LS/I IN 63	65
032A-3	R6	XT2H 160 EKIP DIP LS/I IN 100	65
038A-3	R6	XT2H 160 EKIP DIP LS/I IN 100	65
045A-3	R6	XT2H 160 EKIP DIP LS/I IN 100	65
061A-3	R6	XT2H 160 EKIP DIP LS/I IN 160	65
072A-3	R6	XT2H 160 EKIP DIP LS/I IN 160	65
087A-3	R6	XT2H 160 EKIP DIP LS/I IN 160	65
105A-3	R8	XT4H 250 EKIP DIP LS/I IN 250A	65
145A-3	R8	XT4H 250 EKIP DIP LS/I IN 250A	65
169A-3	R8	XT4H 250 EKIP DIP LS/I IN 250A	65
206A-3	R8	XT4H 250 EKIP DIP LS/I IN 250A	65
U_n = 500 V			
07A6-5	R3	XT2H 160 EKIP DIP LS/I IN 25	30
11A0-5	R3	XT2H 160 EKIP DIP LS/I IN 25	30
014A-5	R3	XT2H 160 EKIP DIP LS/I IN 63	30
021A-5	R3	XT2H 160 EKIP DIP LS/I IN 63	30
027A-5	R6	XT2H 160 EKIP DIP LS/I IN 100	30
034A-5	R6	XT2H 160 EKIP DIP LS/I IN 100	30
040A-5	R6	XT2H 160 EKIP DIP LS/I IN 100	30
052A-5	R6	XT2H 160 EKIP DIP LS/I IN 160	30
065A-5	R6	XT2H 160 EKIP DIP LS/I IN 160	30
077A-5	R6	XT2H 160 EKIP DIP LS/I IN 160	30
101A-5	R8	XT4H 250 EKIP DIP LS/I IN 250A	45
124A-5	R8	XT4H 250 EKIP DIP LS/I IN 250A	45
156A-5	R8	XT4H 250 EKIP DIP LS/I IN 250A	45
180A-5	R8	XT4H 250 EKIP DIP LS/I IN 250A	45

[1] Maximum allowed rated conditional short-circuit current (IEC 61800-5-1) of the electrical power network.

Circuit breakers (UL)

ABB inverse time circuit breakers

The drives are suitable for use on a circuit capable of delivering not more than 65 kA symmetrical amperes (rms) at 480 V maximum when protected by circuit breakers in the tables below.

Additional fuse protection is not required when using the circuit breakers herein. Circuit breakers are not required to be in the same enclosure as the drive.

Notes below the table must be followed when using these breakers.

Note: Circuit breakers are not yet validated as protection device for R6 frame “HW V2”. R6 frame “HW V2” variants must use fuses. “HW V2” is shown in the type designation label.

ACS880-11-...	Frame	Input current	CB Maximum current	CB Voltage	Drive volume	ABB circuit breaker	Max. I^2t	Max. I_{peak}
		A	A	V	in^3		A^2s	kA
U_n = 480 V								
07A6-5	R3	5.8	20	480	1638	XT2Hαβ020#********	0.512×10^6	23.2
11A0-5	R3	7.8	20	480	1638	XT2Hαβ020#********	0.512×10^6	23.2
014A-5	R3	10.6	35	480	1638	XT2Hαβ035#********	0.512×10^6	23.2
021A-5	R3	15.6	35	480	1638	XT2Hαβ035#********	0.512×10^6	23.2
027A-5	R6	21.3	70	480	3507	XT2Hαβ070#********	0.512×10^6	23.2
034A-5	R6	26.2	70	480	3507	XT2Hαβ070#********	0.512×10^6	23.2
040A-5	R6	31.2	70	480	3507	XT2Hαβ070#********	0.512×10^6	23.2
052A-5	R6	40.1	125	480	3507	XT2Hαβ125#********	0.512×10^6	23.2
065A-5	R6	49.5	125	480	3507	XT2Hαβ125#********	0.512×10^6	23.2
077A-5	R6	60.2	125	480	3507	XT2Hαβ125#********	0.512×10^6	23.2
101A-5	R8	74	225	480	6602	XT4Hαβ225#********	0.98×10^6	30
124A-5	R8	100	225	480	6602	XT4Hαβ225#********	0.98×10^6	30
156A-5	R8	120	250	480	6602	XT4Hαβ250#********	0.98×10^6	30
180A-5	R8	147	250	480	6602	XT4Hαβ250#********	0.98×10^6	30

Notes:

1. Drives that have an enclosure minimum volume listed must be mounted in an enclosure ≥ enclosure minimum volume specified in the tables above.
2. When multiple drives that have an enclosure minimum volume specified are installed in the same enclosure, minimum volume of the enclosure is determined by largest enclosure minimum volume of the drives to be placed in the enclosure, plus the volume(s) of each additional drive. i.e. for the 480V R6 and R3 drive select enclosure with the volume ≥ 16200+1011 = 17211 in^3.
3. For UL Open Type, UL Type 1 or UL Type 12 drives that have a minimum enclosure volume indicated with ¤, no minimum enclosure volume is required but the drive must be mounted inside an enclosure.
4. If combining a drive with an enclosure minimum volume specified and others with an enclosure minimum volume indicated with ¤, start with the largest specified enclosure minimum volume listed and add the drive volumes for the other drives.

5. If you are only mounting drives with no enclosure minimum volume specified, you have no restrictions on the enclosure size, but follow air clearances specified in the drive HW manuals for sufficient ventilation around each drive.
6. UL Open Type, UL Type 1 and UL Type 12 drives can be used inside of the enclosure. Use drive volume for all three types listed in the table when installing multiple drives in the enclosure.
7. The ABB circuit breaker part number listed in the table is a base part number.
   - Symbol α represents 80% or 100% allowable continuous current. Options allowed are U, Q, C and D.
   - Symbol β represents the number of poles for the breaker. Options allowed are 3 and 4.
   - Symbol # represents trip units. Trip units allowed include A thru C, E thru L, P thru Z. If using Ekip breakers, set the overload current of the circuit breaker equal to or less than the value shown in the “CB Maximum Current” column in the tables above.
   - The digits indicated with an “*” represent accessories for the breakers and have no impact on the drive UL listing or performance or rating of the breaker.
   - For the ABB circuit breaker configurator refer to: https://lowvoltage-configurator.tnb.com/configurator/#/config/tmax_xt.
8. Ratings in the tables are maximum for the given circuit breaker frame size. Breakers of the same frame size and interrupting rating with lower current ratings are also allowed.
9. Using a circuit breaker with a lower KAIC rating is not allowed even if the available SC current is less than 65 kA.
10. **For 480 V:** When designing UL508A panels, Article SB 4.2.3 Exception No. 3 allows the use of other manufacturers' current limiting inverse time circuit breakers which have same voltage, current and interrupting rating, if I_{peak} and I^2t are the same or less than the ABB specified circuit breaker.
11. **For 480 V:** Non-current limiting inverse time circuit breakers must not be used.
12. Alternative circuit breakers can be used if they meet certain characteristics. For acceptable breakers see Alternate Fuses, MMPs and Circuit Breakers for ABB Drives (3AXD50000645015 [English]).

Dimensions, weights and free space requirements

Frame size	Weight	Weight	Height	Height	Width	Width	Depth	Depth
	kg	lb	mm	in	mm	in	mm	in
IP21 (UL Type 1)								
R3	21.3	47	495	19	205	8	356	14.02
R6	61	135	771	30	252	9.92	382	15.03
R8	118 [1]	260	965	38	300	11.81	430	16.94
IP55 (UL Type 12), option +B056								
R3	23.3	51	495	19	205	8	360	14.17
R6	63	139	771	30	252	9.92	445	17.52
R8	124 [2]	273	965	38	300	11.81	496	19.52
IP20 (option +P940)								
R3	18.3	40.34	490	19	203	7.99	349	13.74
R6	59	131	771	30	252	9.92	358	14
R8	115 [3]	254	964	38	300	11.81	430	16.94

[1] for types -105A-3, 145A-3, -101A-5, -124A-5: 103 kg (227 lb)
[2] for types -105A-3, 145A-3, -101A-5, -124A-5: 109 kg (240 lb)
[3] for types -105A-3, 145A-3, -101A-5, -124A-5: 100 kg (220 lb)

Frame size	Drive weight with flange kit (option +C135)	
	IP21	IP55
	kg	kg
R3	25.45	27.45
R6	66.80	68.88
R8	125.90	131.90

Frame size	Drive weight with flange kit (option +C135)	
	UL Type 1	UL Type 12
	lb	lb
R3	56.11	60.52
R6	147.27	151.85
R8	277.56	290.79

* Hood not included

Free space requirements

See section Installation positions (page 43).

Package dimensions and weights

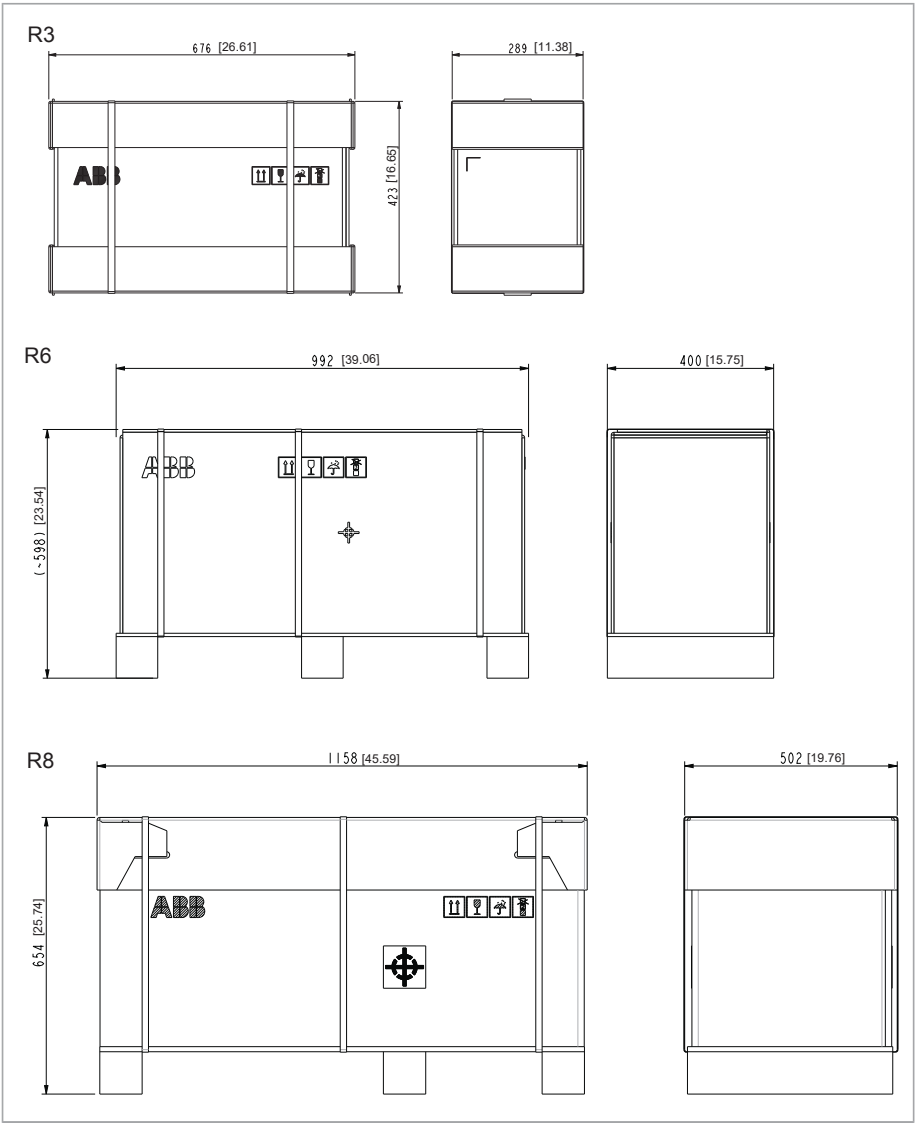

Frame size	Package weight	
	kg	lb
R3	23.4	51.6
R6	74.8	164.9
R8	136 [1]	299.8 [2]

[1] for types -105A-3, 145A-3, -101A-5, -124A-5: 121 kg
[2] for types -105A-3, 145A-3, -101A-5, -124A-5: 266.8 lb

Losses, cooling data and noise

The air flow direction is from bottom to top.

This table shows typical heat loss values, required air flow and noise at the nominal ratings of the drive. The heat loss values can vary depending on voltage, cable conditions, motor efficiency and power factor. To obtain more accurate values for given conditions, use ABB DriveSize tool (http://new.abb.com/drives/software-tools/drivesize).

IEC

ACS880-11-...	Power losses	Air flow		Noise	Frame size
	W	m^3/h	ft^3/min	dB(A)	
U_n = 400 V					
09A4-3	226	361	212	57	R3
12A6-3	329	361	212	57	R3
017A-3	395	361	212	57	R3
025A-3	579	361	212	57	R3
032A-3	625	550	324	71	R6
038A-3	751	550	324	71	R6
045A-3	912	550	324	71	R6
061A-3	1088	550	324	71	R6
072A-3	1502	550	324	71	R6
087A-3	1904	550	324	71	R6
105A-3	1877	860/913 [1)]	506/537 [1)]	68	R8
145A-3	2963	860/913 [1)]	506/537 [1)]	68	R8
169A-3	3168	860/913 [1)]	506/537 [1)]	68	R8
206A-3	3990	860/913[1)]	506/537 [1)]	68	R8
U_n = 500 V					
07A6-5	219	361	212	57	R3
11A0-5	278	361	212	57	R3
014A-5	321	361	212	57	R3
021A-5	473	361	212	57	R3
027A-5	625	550	324	71	R6
034A-5	711	550	324	71	R6
040A-5	807	550	324	71	R6
052A-5	960	550	324	71	R6
065A-5	1223	550	324	71	R6
077A-5	1560	550	324	71	R6
101A-5	1995	860/913 [1)]	506/537 [1)]	68	R8
124A-5	2800	860/913 [1)]	506/537 [1)]	68	R8

ACS880-11-...	Power losses	Air flow		Noise	Frame size
	W	m^3/h	ft^3/min	dB(A)	
156A-5	3168	860/913 [1]	506/537 [1]	68	R8
180A-5	3872	860/913 [1]	506/537 [1]	68	R8

[1] IP21/IP55

These losses are not calculated according to the ecodesign standard IEC 61800-9-2.

UL (NEC)

ACS880-11-...	Power losses	Air flow		Noise	Frame size
	W	m^3/h	ft^3/min	dB(A)	
U_n = 480 V					
07A6-5	219	361	212	57	R3
11A0-5	278	361	212	57	R3
014A-5	321	361	212	57	R3
021A-5	473	361	212	57	R3
027A-5	625	550	324	71	R6
034A-5	711	550	324	71	R6
040A-5	807	550	324	71	R6
052A-5	960	550	324	71	R6
065A-5	1223	550	324	71	R6
077A-5	1560	550	324	71	R6
101A-5	1995	860/913 [1]	506/537 [1]	68	R8
124A-5	2800	860/913 [1]	506/537 [1]	68	R8
156A-5	3168	860/913 [1]	506/537 [1]	68	R8
180A-5	3872	860/913 [1]	506/537 [1]	68	R8

[1] IP21/IP55

These losses are not calculated according to the ecodesign standard IEC 61800-9-2.

Cooling air flow and heat dissipation for flange mounting (option +C135)

ACS880-11-...	Heat dissipation		Cooling air flow		Frame size
	Heatsink	Front	Heatsink	Front	
	W	W	m^3/h	m^3/h	
U_n = 400 V					
09A4-3	186	40	361	0	R3
12A6-3	288	41	361	0	R3
017A-3	353	42	361	0	R3

ACS880-11-...	Heat dissipation		Cooling air flow		Frame size
	Heatsink	Front	Heatsink	Front	
	W	W	m^3/h	m^3/h	
025A-3	533	46	361	0	R3
032A-3	578	47	498	52	R6
038A-3	702	49	498	52	R6
045A-3	860	52	498	52	R6
061A-3	1032	56	498	52	R6
072A-3	1437	65	498	52	R6
087A-3	1829	75	498	52	R6
105A-3	1803	74	740	60	R8
145A-3	2858	105	740	60	R8
169A-3	3056	112	740	60	R8
206A-3	3849	141	740	60	R8
U_n = 500 V					
07A6-5	180	39	361	0	R3
11A0-5	238	40	361	0	R3
014A-5	280	41	361	0	R3
021A-5	429	44	361	0	R3
027A-5	578	47	498	52	R6
034A-5	663	48	498	52	R6
040A-5	757	50	498	52	R6
052A-5	907	53	498	52	R6
065A-5	1164	59	498	52	R6
077A-5	1494	66	498	52	R6
101A-5	1918	77	740	60	R8
124A-5	2700	100	740	60	R8
156A-5	3056	112	740	60	R8
180A-5	3736	136	740	60	R8

These losses are not calculated according to the ecodesign standard IEC 61800-9-2.

Terminal and entry data for the power cables

Input, motor and DC cable entries, maximum wire sizes (per phase) and terminal screw sizes and tightening torques are given below. Ø = Maximum cable diameter accepted.

- For the bottom plate hole diameters, see chapter Dimension drawings (page 207).
- The minimum specified wire size does not necessarily have sufficient current carrying capacity at maximum load.

- The terminals do not accept a conductor that is one size larger than the maximum specified wire size.
- The maximum number of conductors per terminal is 1.

Frame	Cable entries		L1, L2, L3, T1/U, T2/V, T3/W, UDC+, UDC- terminals				PE terminal		
	pcs	Ø	Min wire size (solid/ stranded) [1]	Max wire size (solid/ stranded)	Wire screw	*T*	Wire size	Wire screw	*T*
		mm	mm^2	mm^2	M...	N·m	mm^2	M...	N·m
R3	3	23	0.5	16.0	M4	1.7	25	M5	1.7
R6	3	45	6.0	70.0	M8	15	35	M6	2.9
R8	3	50	25	150	M10	30	185	M6	9.8

[1] **Note:** Only copper cables are allowed for drive types up to -032A-3 and up to -027A-5.

For tightening torques of 360° grounding clamps, see section Connection procedure (page 91).

Frame	Screwdrivers for the terminals of the main circuit
R3	Flat blade 0.6 x 3.5 mm

Frame	Cable entries		L1, L2, L3, T1/U, T2/V, T3/W, UDC+, UDC- terminals				PE terminal		
	pcs	Ø	Min wire size (solid/ stranded)	Max wire size (solid/ stranded)	Wire screw	*T*	Wire size	Wire screw	*T*
		in	AWG	AWG/kcmil	M...	lbf·ft	AWG/kcmil	M...	lbf·ft
R3	3	0.91	20	6	M4	1.2	4	M5	1.2
R6	3	1.77	6	1/0	M8	11.0	2	M6	2.1
R8	3	1.97	4	300	M10	22.5	350 MCM	M6	7.2

For tightening torques of 360° grounding clamp terminals, see section Connection procedure (page 113).

Terminal and entry data for the control cables

IEC

Control cable entries, wire sizes and tightening torques (*T*) are given below.

Frame size	Cable entries		Control cable entries and terminal sizes			
	Holes	Max cable size	+24V, DCOM, DGND, EXT. 24V terminals		DI, AI/O, AGND, RO, STO terminals	
			Wire size	*T*	Wire size	*T*
	pcs	mm	mm^2	N·m	mm^2	N·m
R3	4	17	0.2…2.5	0.5…0.6	0.14…2.5	0.5…0.6
R6	4	17	0.14…2.5	0.5…0.6	0.14…2.5	0.5…0.6

Frame size	Cable entries		Control cable entries and terminal sizes			
	Holes	Max cable size	+24V, DCOM, DGND, EXT. 24V terminals		DI, AI/O, AGND, RO, STO terminals	
			Wire size	*T*	Wire size	*T*
	pcs	mm	mm^2	N·m	mm^2	N·m
R8	4	17	0.14…2.5	0.5…0.6	0.14…2.5	0.5…0.6

North America

Control cable entries, wire sizes and tightening torques (*T*) are given below.

Frame size	Cable entries		Control cable entries and terminal sizes			
	Holes	Max cable size	+24V, DCOM, DGND, EXT. 24V terminals		DI, AI/O, AGND, RO, STO terminals	
			Wire size	*T*	Wire size	*T*
	pcs	in	AWG	lbf·ft	AWG	lbf·ft
R3	4	0.67	24…14	0.4	26…14	0.4
R6	4	0.67	26…14	0.4	26…14	0.4
R8	4	0.67	26…14	0.4	26…14	0.4

Power cables

The table below gives typical copper and aluminum cable types with concentric copper shield for the drives with nominal current. For terminal and entry data for power cables, see Terminal and entry data for the power cables (page 189).

Drive type ACS880-11-…	Frame size	IEC[1)]		UL (NEC)[3)]
		Cu cable type	Al cable type [2)]	Cu cable type
		mm^2	mm^2	AWG/kcmil
U_n = 400 V				
09A4-3	R3	3×1.5	-	-
12A6-3	R3	3×1.5	-	-
017A-3	R3	3×6	-	-
025A-3	R3	3×6	-	-
032A-3	R6	3×10	3×16	-
038A-3	R6	3×10	3×16	-
045A-3	R6	3×16	3×35	-
061A-3	R6	3×25	3×35	-
072A-3	R6	3×35	3×35	-
087A-3	R6	3×35	3×50	-
105A-3	R8	3×50	3×70	-
145A-3	R8	3×95	3×120	-

Drive type ACS880-11-...	Frame size	IEC[1]		UL (NEC)[3]
		Cu cable type	Al cable type [2]	Cu cable type
		mm^2	mm^2	AWG/kcmil
169A-3	R8	3×120	3×150	-
206A-3	R8	3×150	-	-
U_n = 500 V				
07A6-5	R3	3×1.5	-	14
11A0-5	R3	3×1.5	-	14
014A-5	R3	3×6	-	10
021A-5	R3	3×6	-	10
027A-5	R6	3×10	3×16	8
034A-5	R6	3×10	3×16	8
040A-5	R6	3×16	3×35	6
052A-5	R6	3×25	3×35	4
065A-5	R6	3×35	3×35	2
077A-5	R6	3×35	3×50	2
101A-5	R8	3×50	3×70	1
124A-5	R8	3×95	3×95	2/0
156A-5	R8	3×120	3×150	3/0
180A-5	R8	3×150	-	250MCM

1) The cable sizing is based on max. 9 cables laid on a cable ladder side by side, three ladder type trays one on top of the other, ambient temperature 30 °C, PVC insulation, surface temperature 70 °C (EN 60204-1 and IEC 60364-5-52/2001). For other conditions, size the cables according to local safety regulations, appropriate input voltage and the load current of the drive.

2) Aluminum cables must not be used with drives of frame size R3.

3) The cable sizing is based on NEC Table 310-16 for copper wires, 75 °C (167 °F) wire insulation at 40 °C (104 °F) ambient temperature. Not more than three current-carrying conductors in raceway or cable or earth (directly buried). For other conditions, size the cables according to local safety regulations, appropriate input voltage and the load current of the drive.

4) In the USA, aluminum cables must not be used.

Temperature: For IEC, select a cable rated for at least 70 °C maximum permissible temperature of conductor in continuous use. For North America, power cables must be rated for 75 °C (167 °F) or higher.
For surrounding air temperatures above 40 °C (104 °F) or frame R6 with option +B056 (UL Type 12), select a cable rated for at least 90 °C (194 °F) maximum permissible temperature of conductor in continuous use.

Voltage: 600 V AC cable is accepted for up to 500 V AC.

Electrical power network specification

Voltage (U_1)	ACS880-11-xxxx-3 drives: 380…415 V AC 3-phase +10%…-15%. This is indicated in the type designation label as typical input voltage level 3~400 V AC. ACS880-11-xxxx-5 drives: 380...500 V AC 3-phase +10%…-15%. This is indicated in the type designation label as typical input voltage levels 3~400/480/500 V AC.
Network type	Public low voltage networks. TN (grounded) and IT (ungrounded) systems. See section Compatibility with IT (ungrounded), corner-grounded delta, midpoint-grounded delta and TT systems.
Rated conditional short-circuit current (IEC 61439-1)	65 kA when protected by the fuses given in the fuse table.
Short-circuit current protection (UL 61800-5-1)	The drive is suitable for use on a circuit capable of delivering not more than 100,000 rms symmetrical amperes at 480 V maximum when protected by the fuses given in the fuse table.
Frequency (f_1)	47…63 Hz. This is indicated in the type designation label as typical input frequency f1 (50/60 Hz).
Imbalance	Max. ± 3% of nominal phase to phase input voltage
Fundamental power factor (cos phi$_1$)	1 (at nominal load)

Harmonic distortion

Harmonics are below the limits defined in IEEE 519-2014, and G5/4. The drive complies with IEC 61000-3-2, IEC 61000-3-4 and IEC 61000-3-12.

The table below shows typical values of the drive for short-circuit ratio (I_{SC}/I_1) of 20 to 100. The values will be met if the supply network voltage is not distorted by other loads and when the drive operates at nominal load.

Nominal bus voltage V at PCC	THDi (%)	THDv (%)
V ≤ 690 V	3*	< 3**

PCC Point on a public power supply system, electrically nearest to a particular load, at which other loads are, or could be, connected. The PCC is a point located upstream of the considered installation.

THDi Indicates the total harmonic current distortion of the wave form. This value is defined as the ratio (in %) of the harmonic current to the fundamental (non-harmonic) current measured at a load point at the particular moment when the measurement is taken:

$$THDi = \frac{\sqrt{\sum_{2}^{40} I_n^2}}{I_1} \cdot 100\%$$

THDv Indicates the total magnitude of the voltage distortion. This value is defined as the ratio (in %) of the harmonic voltage to the fundamental (non-harmonic) voltage:

$$THDv = \frac{\sqrt{\sum_{2}^{40} U_n^2}}{U_1} \cdot 100\%$$

I_{SC}/I_1 Short-circuit ratio

I_{SC} Maximum short-circuit current at PCC

I_1 Continuous rms input current of the drive

I_n Amplitude of the current harmonic n

U_1 Supply voltage

U_n Amplitude of the voltage harmonic n

* The short-circuit ratio can influence the THDi value

** Other loads can influence the THDv value

Motor connection data

Motor types	Asynchronous AC induction motors, permanent magnet synchronous motors, AC induction servomotors, synchronous reluctance motors
Short-circuit current protection (IEC/EN/UL 61800-5-1)	The drive provides solid state short circuit protection for the motor connection per IEC/EN 61800-5-1 and UL 61800-5-1.
Frequency (f_2)	0....500 Hz For drives with du/dt filter: 0…120 Hz For drives with sine filter: 0…120 Hz
Frequency resolution	0.01 Hz
Current	See section Ratings.
Switching frequency	2 kHz, 4 kHz, 8 kHz, 12 kHz, (depends on the frame and parameter settings)
Maximum recommended motor cable length	For frame R3: 150 m (492 ft) For frames R6 and R8: 300 m (984 ft). **Note 1**: With motor cables longer than 150 m (492 ft) or switching frequencies higher than default, the EMC Directive requirements may not be fulfilled. **Note 2**: Longer motor cables cause a motor voltage decrease which limits the available motor power. The decrease depends on the motor cable length and characteristics. Contact ABB for more information. Note that a sine filter (optional) at the drive output also causes a voltage decrease.
EMC compatibility and motor cable length	To comply with the European EMC Directive (standard EN 61800-3), use the following maximum motor cable lengths at 4 kHz switching frequency. For terms, refer to section Definitions (page 201).

Frame size	Maximum motor cable length, 4 kHz	
	m	ft
Drive of category C2 (equipped with EMC filter +E202) See note 1.		
R3, R6 and R8	100	330
Drive of category C3 (equipped with EMC filter +E200 or +E201)		
R3, R6	100	330
R8	150	492

Note 1: Radiated emissions are not compatible when measured with a standard emission measurement setup and should be checked or measured on cabinet and machine installations case by case. Radiated emissions are according to category C2 with integrated EMC filter.

Control unit (ZCU-12) control unit connection data

See Control units of the drive.

Efficiency

Efficiency at nominal power level:

Approximately 96% for frame R3

Approximately 96.5% for frame R6

Approximately 97% for frame R8

Energy efficiency (ecodesign)

Energy efficiency data is not provided for the drive. The regenerative drives are exempt from the EU ecodesign requirements (Regulation EU/2019/1781, §2.3.c) and the UK ecodesign requirements (Regulation SI 2021 No. 745).

Protection classes for module

Degrees of protection (IEC/EN 60529)	IP21 (standard) IP20 (option +P940) IP55 (option +B056)
Enclosure types (UL 50/50E)	UL Type 1 UL Open Type (option +P940) UL Type 12 (option +B056)
Overvoltage category (IEC/EN 60664-1)	III
Protective class (IEC/EN 61800-5-1)	I

Colors

Drive enclosure: RAL 9002 and RAL 9017.

Materials

Drive

Refer to Recycling instructions and environmental information ACS880-11, ACS880-31, ACH580-31 and ACQ580-31 drives (3AXD50000137671 [English]).

Package materials for small wall-mounted drives and converter modules

- Cardboard
- Molded pulp
- EPP (foam)
- PP (strapping)

- PE (plastic bag).

Package materials for large wall-mounted drives and converter modules

- Cardboard heavy duty quality with wet strength glue
- Plywood
- Wood
- PP (strapping)
- PE (VCI foil)
- Metal (fixing clamps, screws).

Package materials for options, accessories and spare parts

- Cardboard
- Kraft paper
- PP (straps)
- PE (foil, bubble wrap)
- Plywood, wood (only for heavy components).

Materials vary according to the item type, size and shape. Typical package consists of a cardboard box with paper filling or bubble wrap. ESD-safe packing materials are used for printed circuit boards and similar items.

Materials of manuals

Printed product manuals are recyclable paper. Product manuals are available on the Internet.

Disposal

The main parts of the drive can be recycled to preserve natural resources and energy. Product parts and materials should be dismantled and separated.

Generally all metals, such as steel, aluminum, copper and its alloys, and precious metals can be recycled as material. Plastics, rubber, cardboard and other packaging material can be used in energy recovery. Printed circuit boards and large electrolytic capacitors need selective treatment according to IEC 62635 guidelines. To aid recycling, plastic parts are marked with an appropriate identification code.

Contact your local ABB distributor for further information on environmental aspects and recycling instructions for professional recyclers. End of life treatment must follow international and local regulations.

Applicable standards

The drive complies with the following standards. The compliance with the European Low Voltage Directive is verified according to standard EN 61800-5-1.

EN 60204-1:2006 + AI:2009 + AC:2010	Safety of machinery. Electrical equipment of machines. Part 1: General requirements. Provisions for compliance: The final assembler of the machine is responsible for installing - emergency-stop device - supply disconnecting device.
IEC/EN 60529:1981 + A1:1999 + A2: 2013	Degrees of protection provided by enclosures (IP code)
IEC 61000-3-2:2018, EN 61000-3-2:2014	Electromagnetic compatibility (EMC) – Limits for harmonic current emissions (equipment input current ≤ 16 A per phase)
IEC/EN 61000-3-12:2011	Electromagnetic compatibility (EMC) - Part 3-12: Limits - Limits for harmonic currents produced by equipment connected to public low-voltage systems with input current > 16 A and ≤ 75 A per phase.
IEC 61000-3-4:1998	Limits - Limitation of emission of harmonic currents in low-voltage power supply systems for equipment with rated current greater than 16 A
IEC/EN 61800-3:2004 + A1:2012	Adjustable speed electrical power drive systems. Part 3: EMC requirements and specific test methods
IEC 61800-5-1:2007 + A1:2016 EN 61800-5-1:2007 + A1:2017	Adjustable speed electrical power drive systems. Part 5-1: Safety requirements – electrical, thermal and energy
IEC 61800-9-2: 2017	Adjustable speed electrical power drive systems – Part 9-2: Ecodesign for power drive systems, motor starters, power electronics and their driven applications – Energy efficiency indicators for power drive systems and motor starters
IEC/EN 60664-1:2007	Insulation coordination for equipment within low-voltage systems. Part 1: Principles, requirements and tests.
UL 61800-5-1: First edition 2012	Standard for Adjustable Speed Electrical Power Drive Systems - Part 5-1: Safety Requirements - Electrical, Thermal and Energy
NEMA 250:2014	Enclosures for Electrical Equipment (1000 Volts Maximum)
CSA C22.2 No. 274-17	Industrial control equipment

Ambient conditions

Environmental limits for the drive are given below. The drive is to be used in a heated, indoor, controlled environment. All printed circuit boards are conformal coated.

	Operation installed for stationary use	**Storage** in the package	**Transportation** in the package
Installation site altitude	0 to 4000 m (13123 ft) above sea level [1)] 0 to 2000 m (6561 ft) above sea level [2)] Output derated above 1000 m (3281 ft), see Altitude derating (page 167).	-	-
Surrounding air temperature	-15 to +55 °C (5 to 131 °F). No frost allowed. See section Electrical ratings (page 163).	-40 to +70 °C (-40 to +158 °F)	-40 to +70 °C (-40 to +158 °F)
Relative humidity	5 to 95%	Max. 95%	Max. 95%
	No condensation allowed. Maximum allowed relative humidity is 60% in the presence of corrosive gases.		
Contamination levels (IEC 60721-3-x)	IEC 60721-3-3: 2002	IEC 60721-3-1: 1997	IEC 60721-3-2: 1997
Chemical gases	Class 3C2.	Class 1C2	Class 2C2
Solid particles	Class 3S2. No conductive dust allowed.	Class 1S3 (packing must support this, otherwise 1S2)	Class 2S2
Pollution degree (IEC/EN 60664-1)	2	-	-
Atmospheric pressure	70 to 106 kPa 0.7 to 1.05 atmospheres	70 to 106 kPa 0.7 to 1.05 atmospheres	60 to 106 kPa 0.6 to 1.05 atmospheres
Vibration (IEC 60068-2:6)	10...150 Hz Amplitude ±0.075 mm, 10...57.56 Hz Constant peak acceleration 10 m/s² (1 gn), 57.56...150 Hz	-	-
Vibration (ISTA)	-	R3: Displacement, 25 mm peak to peak, 14200 vibratory impacts R6, R8 ISTA 3E): Random, overall Grms level of 0.54	

Shock/Drop (ISTA)	Not allowed	R3 (ISTA 1A): Drop, 6 faces, 3 edges and 1 corner, 460 mm (18.1 in) R6, R8 (ISTA 3E): Shock, incline impact: 1.2 m/s (3.94 ft/s) Shock, rotational edge drop: 230 mm (9.1 in)

1) For neutral-grounded TN and TT systems and non-corner grounded IT systems
2) For corner-grounded TN, TT and IT systems

Markings

These markings are attached to the drive:

CE	CE mark Product complies with the applicable European Union legislation. For fulfilling the EMC requirements, see the additional information concerning the drive EMC compliance (IEC/EN 61800-3).
TÜV NORD Safety Approved	TÜV Safety Approved mark (functional safety) Product contains Safe torque off and possibly other (optional) safety functions which are certified by TÜV according to the relevant functional safety standards. Applicable to drives and inverters; not applicable to supply, brake or DC/DC converter units or modules.
UK CA	UKCA (UK Conformity Assessed) mark Product complies with the applicable United Kingdom's legislation (Statutory Instruments). Marking is required for products being placed on the market in Great Britain (England, Wales and Scotland).
c UL us LISTED	UL Listed mark for USA and Canada Product has been tested and evaluated against the relevant North American standards by the Underwriters Laboratories. Valid with rated voltages up to 600 V.
	RCM mark Product complies with Australian and New Zealand requirements specific to EMC, telecommunications and electrical safety. For fulfilling the EMC requirements, see the additional information concerning the drive EMC compliance (IEC/EN 61800-3).
EAC	EAC (Eurasian Conformity) mark Product complies with the technical regulations of the Eurasian Customs Union. EAC mark is required in Russia, Belarus and Kazakhstan.
KC	KC mark Product complies with Korean Registration of Broadcasting and Communications Equipment Clause 3, Article 58-2 of Radio Waves Act.

	Electronic Information Products (EIP) symbol including an Environment Friendly Use Period (EFUP). Product is compliant with the People's Republic of China Electronic Industry Standard (SJ/T 11364-2014) about hazardous substances. The EFUP is 20 years. China RoHS II Declaration of Conformity is available from https://library.abb.com.
	WEEE mark At the end of life the product should enter the recycling system at an appropriate collection point and not placed in the normal waste stream.

Compliance with the EN 61800-3:2004 + A1:2012

Definitions

EMC stands for Electromagnetic Compatibility. It is the ability of electrical/electronic equipment to operate without problems within an electromagnetic environment. Likewise, the equipment must not disturb or interfere with any other product or system within its locality.

First environment includes establishments connected to a low-voltage network which supplies buildings used for domestic purposes.

Second environment includes establishments connected to a network not supplying domestic premises.

Drive of category C1: drive of rated voltage less than 1000 V and intended for use in the first environment.

Drive of category C2: drive of rated voltage less than 1000 V and intended to be installed and started up only by a professional when used in the first environment.

Note: A professional is a person or organization having necessary skills in installing and/or starting up power drive systems, including their EMC aspects.

Drive of category C3: drive of rated voltage less than 1000 V and intended for use in the second environment and not intended for use in the first environment.

Drive of category C4: drive of rated voltage equal to or above 1000 V, or rated current equal to or above 400 A, or intended for use in complex systems in the second environment.

Category C2

The drive complies with the standard with the following provisions:

1. The drive is equipped with EMC filter option +E202.
2. The motor and control cables are selected as specified in this manual.
3. The drive is installed according to the instructions given in this manual.

4. For the maximum motor cable length with 4 kHz switching frequency, see section Motor connection data (page 195).

WARNING! The drive can cause radio interference if used in residential or domestic environment. The user is required to take measures to prevent interference, in association to the requirements for the CE compliance listed above, if necessary.

Note: Note: Do not install a drive with the EMC filter connected to a system that the filter is not suitable for. This can cause danger, or damage the drive.

Note: Do not install a drive with the ground-to-phase varistor connected to a system that the varistor is not suitable for. If you do, the varistor circuit can be damaged.
If you install the drive to any other system than symmetrically grounded TN-S system, you may need to disconnect the EMC filter or the ground-to-phase varistor. See section Grounding system compatibility check (page 89).

Category C3

The drive complies with the standard with the following provisions:

1. The drive is equipped with EMC filter option +E200 or +E201.
2. The motor and control cables are selected as specified in this manual.
3. The drive is installed according to the instructions given in this manual.
4. For the maximum motor cable length with 4 kHz switching frequency, see section Motor connection data (page 195).

WARNING! A drive of category C3 is not intended to be used on a low-voltage public network which supplies domestic premises. Radio frequency interference is expected if the drive is used on such a network.

Note: Do not install a drive with the EMC filter connected to a system that the filter is not suitable for. This can cause danger, or damage the drive.

Note: Do not install a drive with the ground-to-phase varistor connected to a system that the varistor is not suitable for. If you do, the varistor circuit can be damaged.
If you install the drive to any other system than symmetrically grounded TN-S system, you may need to disconnect the EMC filter or the ground-to-phase varistor. See section Grounding system compatibility check (page 89).

Category C4

The drive complies with the C4 category with these provisions:

1. It is made sure that no excessive emission is propagated to neighboring low-voltage networks. In some cases, the natural suppression in transformers and cables is sufficient. If in doubt, a supply transformer with static screening between the primary and secondary windings can be used.

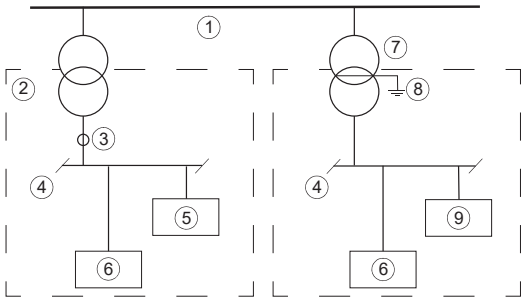

1	Medium voltage network	6	Equipment
2	Neighboring network	7	Supply transformer
3	Point of measurement	8	Static screen
4	Low voltage	9	Drive
5	Equipment (victim)	-	-

2. An EMC plan for preventing disturbances is drawn up for the installation. A template is available in Technical guide No. 3 EMC compliant installation and configuration for a power drive system (3AFE61348280 [English]).
3. The motor and control cables are selected, and routed according to the electrical planning guidelines of the drive. The EMC recommendations are obeyed.
4. The drive is installed according to its installation instructions. The EMC recommendations are obeyed.

WARNING!
A drive of category C4 is not intended to be used on a low-voltage public network which supplies domestic premises. Radio frequency interference is expected if the drive is used on such a network.

UL checklist

WARNING!
Operation of this drive requires detailed installation and operation instructions provided in the hardware and software manuals. The manuals are provided in electronic format in the drive package or on the Internet. Keep the manuals with the drive at all times. Hard copies of the manuals can be ordered through the manufacturer.

- Make sure that the drive type designation label includes the applicable marking.
- **DANGER - Risk of electric shock.** After disconnecting the input power, always wait for 5 minutes to let the intermediate circuit capacitors discharge before you start working on the drive, motor or motor cable.
- The drive is to be used in a heated, indoor controlled environment. The drive must be installed in clean air according to the enclosure classification. Cooling air must be clean, free from corrosive materials and electrically conductive dust.
- The cables located within the motor circuit must be rated for at least 75 °C in UL-compliant installations.
- The input cable must be protected with fuses or circuit breakers. These protective devices provide branch circuit protection in accordance with the national regulations (National Electrical Code (NEC) or Canadian Electrical Code). Obey also any other applicable local or provincial codes.
  Suitable UL fuses are listed in section Fuses (UL) (page 178) and circuit breakers in section Circuit breakers (UL) (page 181).
- **WARNING!**
  The opening of the branch-circuit protective device may be an indication that a fault current has been interrupted. To reduce the risk of fire or electric shock, current-carrying parts and other components of the device should be examined and replaced if damaged.
- The drive provides motor overload protection. The protection is not enabled when the drive leaves the ABB factory. For enabling the protection, see the firmware manual.
- The drive overvoltage category according to IEC 60664-1 is III.
- To maintain the environment integrity of the enclosure, replace the cable grommets with field-installed industrial conduit hubs or closure plates required by the enclosure type (or better).

Declarations of conformity

You can find declarations of conformity in PDF format on the Internet at www.abb.com/drives/documents. For EU and UK declarations of conformity, see the chapter The Safe torque off function (page 215).

Marine approvals

Refer to ACS880-01…, ACS880-04…, ACS880-11…, ACS880-31…, ACS880-14… and ACS880-34… +C132 marine type-approved drives supplement (3AXD50000010521 [English]).

Design lifetime expectancy

The design lifetime expectancy of the drive and its overall components exceeds ten (10) years in normal operating environments. In some cases, the drive can last 20 years or more. To achieve a long lifetime for the product the manufacturer's instructions for sizing the drive, installation, operational conditions and preventive maintenance schedule shall be followed.

Disclaimers

Generic disclaimer

The manufacturer shall have no obligation with respect to any product which (i) has been improperly repaired or altered; (ii) has been subjected to misuse, negligence or accident; (iii) has been used in a manner contrary to the manufacturer's instructions; or (iv) has failed as a result of ordinary wear and tear.

Cybersecurity disclaimer

This product can be connected to and communicate information and data via a network interface. The HTTP protocol, which is used between the commissioning tool (Drive Composer) and the product, is an unsecured protocol. For independent and continuous operation of product such connection via network to commissioning tool is not necessary. However it is Customer's sole responsibility to provide and continuously ensure a secure connection between the product and Customer network or any other network (as the case may be). Customer shall establish and maintain any appropriate measures (such as but not limited to the installation of firewalls, prevention of physical access, application of authentication measures, encryption of data, installation of anti-virus programs, etc.) to protect the product, the network, its system and the interface against any kind of security breaches, unauthorized access, interference, intrusion, leakage and/or theft of data or information.

Notwithstanding any other provision to the contrary and regardless of whether the contract is terminated or not, ABB and its affiliates are under no circumstances liable for damages and/or losses related to such security breaches, any

unauthorized access, interference, intrusion, leakage and/or theft of data or information.

13

Dimension drawings

Contents of this chapter

This chapter shows the dimension drawings of the drive. The dimensions are given in millimeters and [inches].

R3, IP21 (UL Type 1)

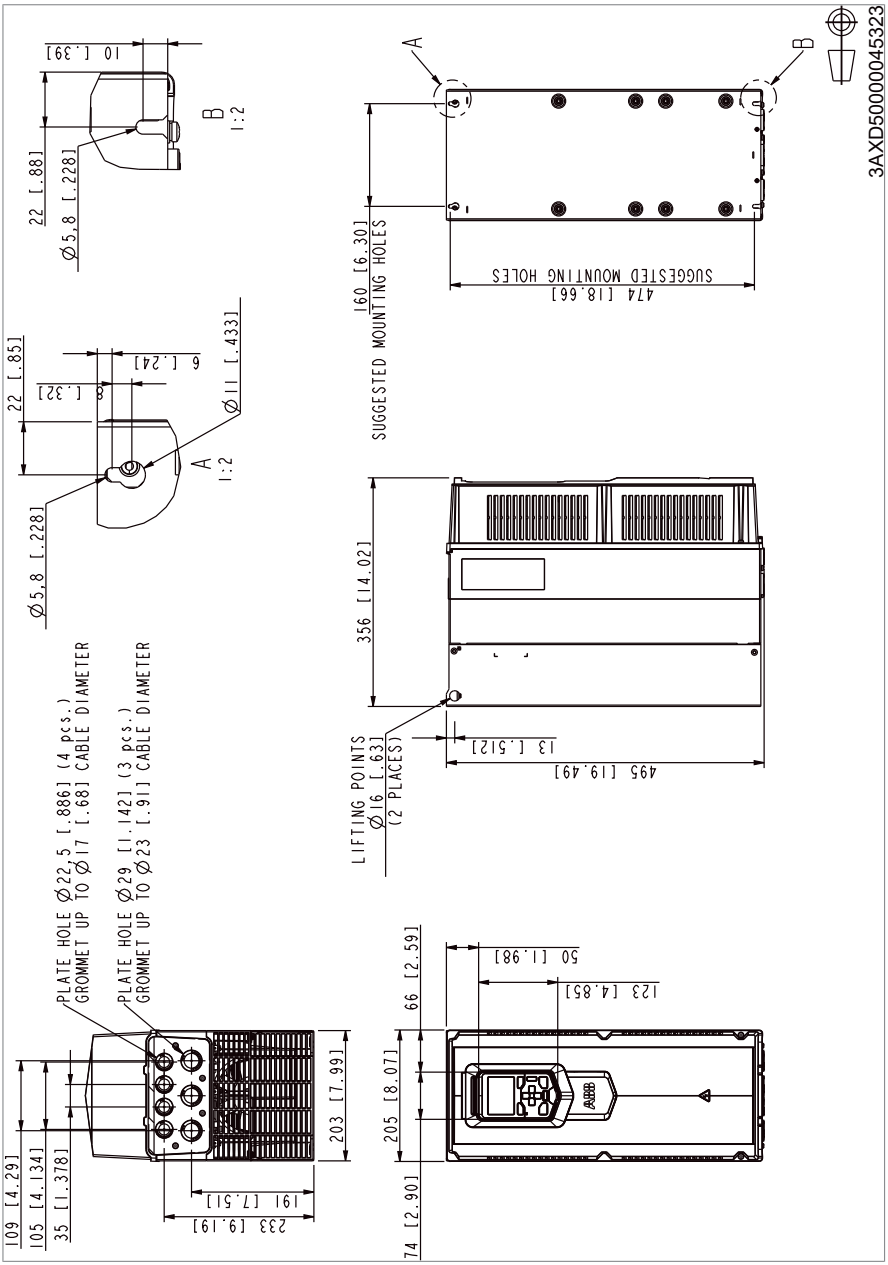

R3 – Option +B056 (IP55, UL Type 12)

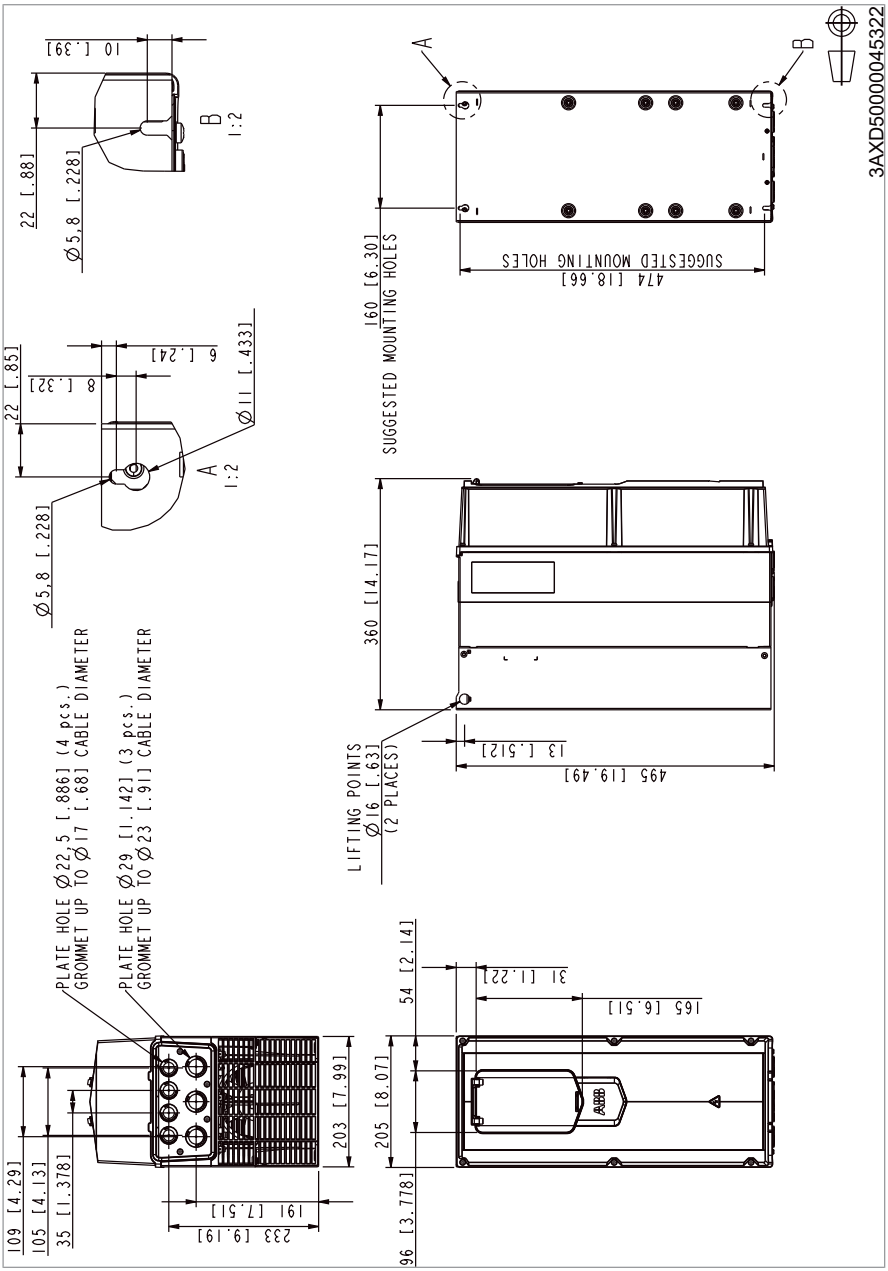

R6, IP21 (UL Type 1)

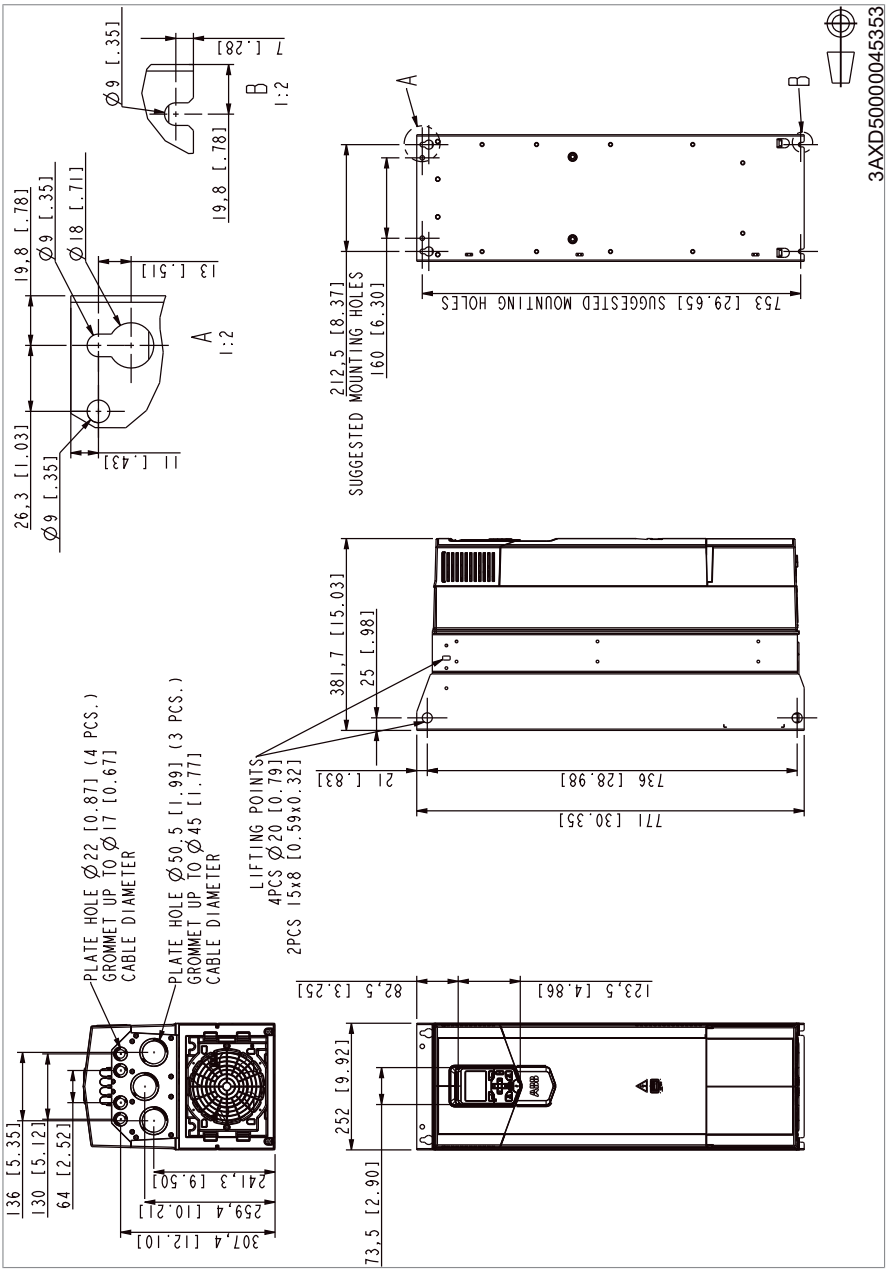

R6 – Option +B056 (IP55, UL Type 12)

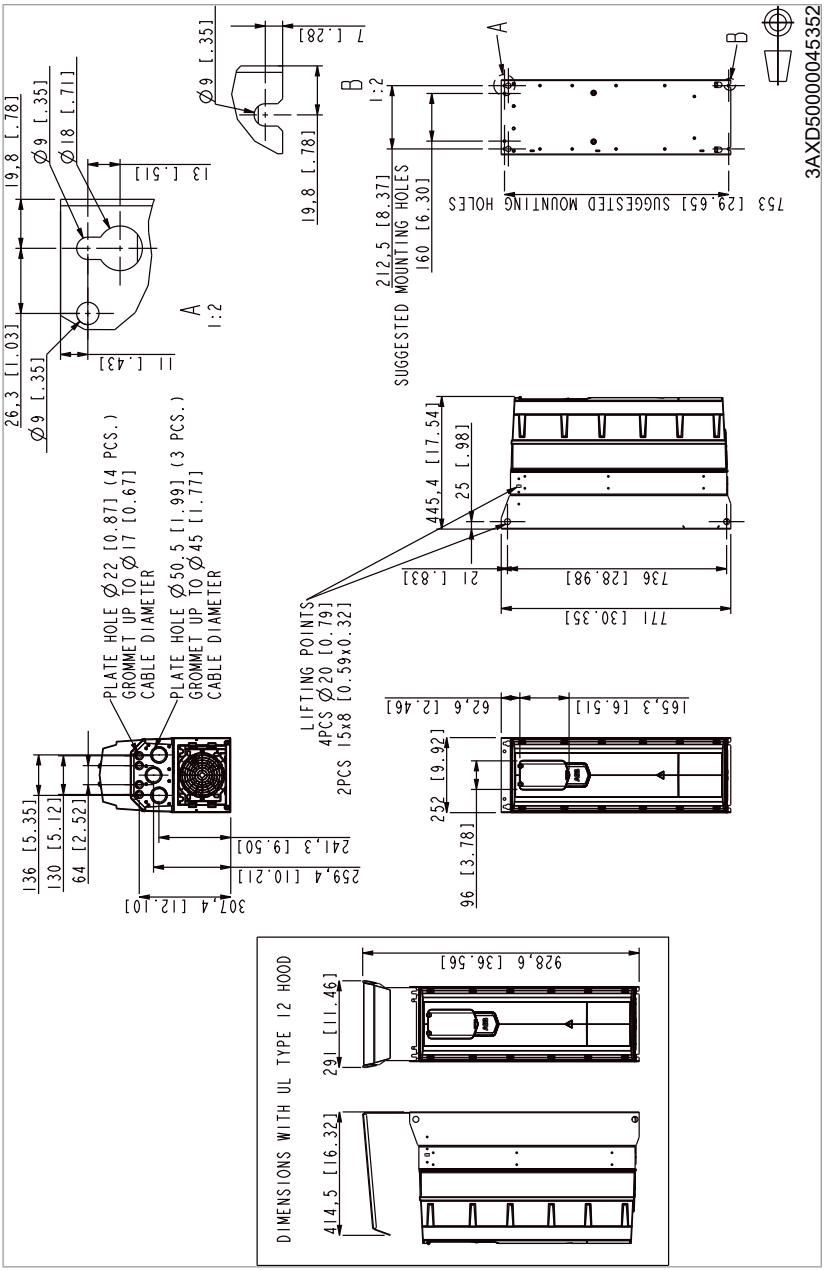

R8, IP21 (UL Type 1)

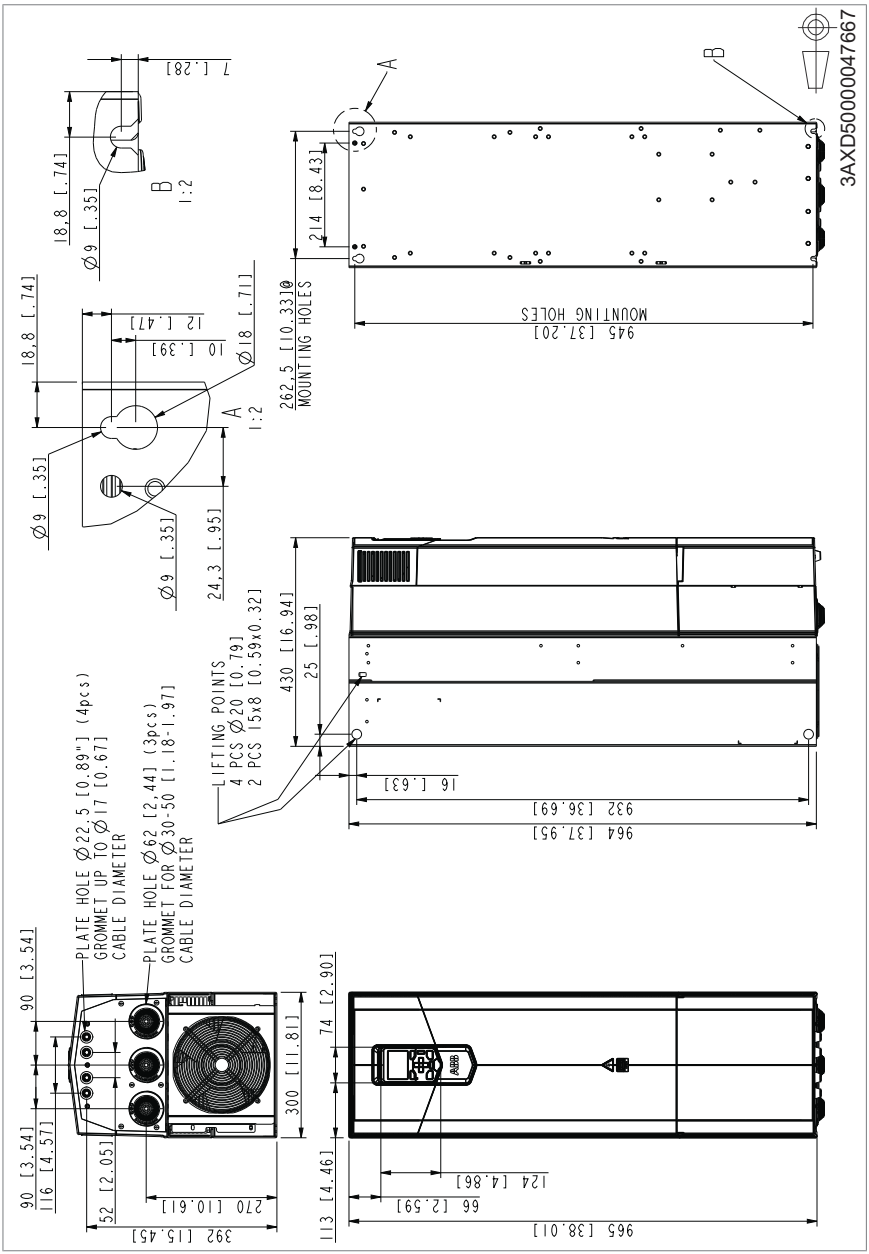

R8 – Option +B056 (IP55, UL Type 12)

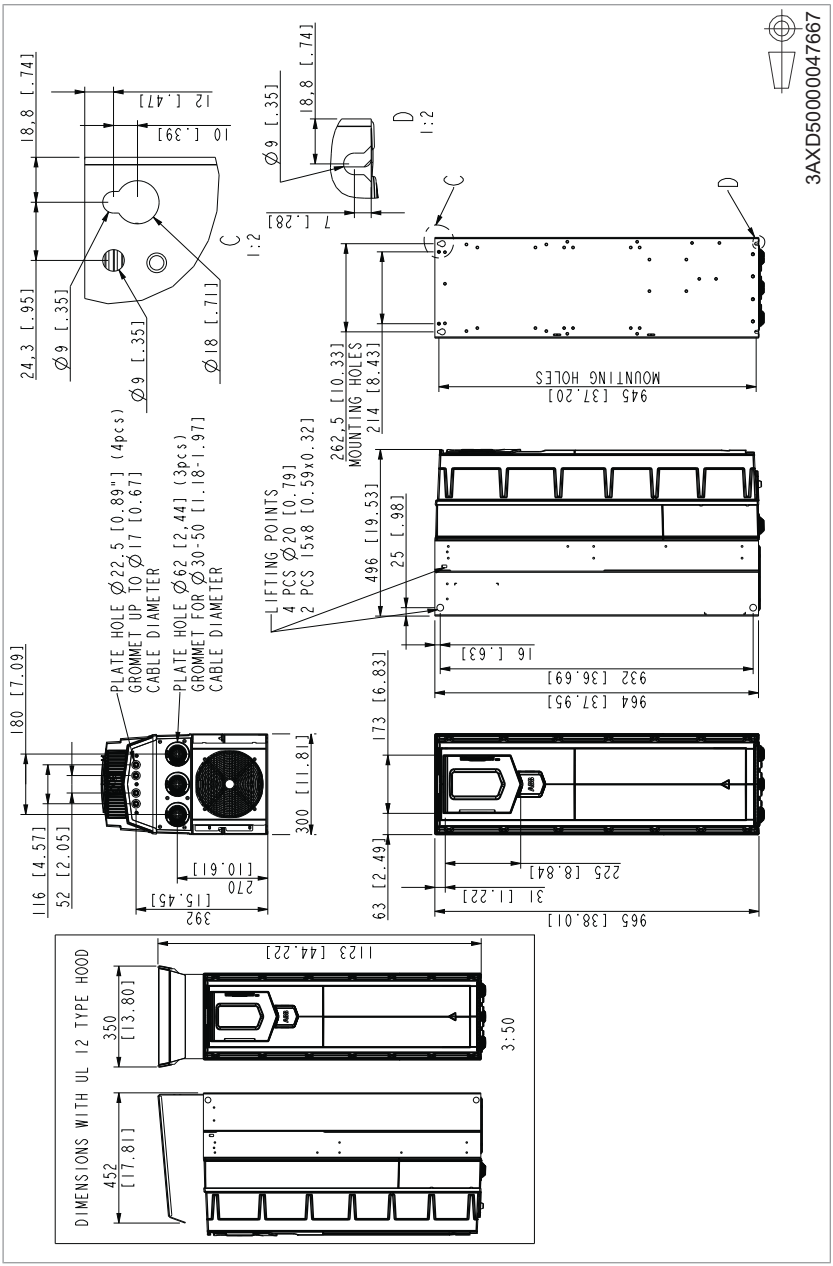

14

The Safe torque off function

Contents of this chapter

This chapter describes the Safe torque off (STO) function of the drive and gives instructions for its use.

Description

WARNING!
In case of parallel-connected drives or dual-winding motors, the STO must be activated on each drive to remove the torque from the motor.

The Safe torque off function can be used, for example, as the final actuator device of safety circuits (such as an emergency stop circuit) that stop the drive in case of danger. Another typical application is a prevention of unexpected start-up function that enables short-time maintenance operations like cleaning or work on non-electrical parts of the machinery without switching off the power supply to the drive.

When activated, the Safe torque off function disables the control voltage for the power semiconductors of the drive output stage, thus preventing the drive from generating the torque required to rotate the motor. If the motor is running when Safe torque off is activated, it coasts to a stop.

The Safe torque off function has a redundant architecture, that is, both channels must be used in the safety function implementation. The safety data given in this manual is calculated for redundant use, and does not apply if both channels are not used.

The Safe torque off function complies with these standards:

Standard	Name
IEC 60204-1:2016 EN 60204-1:2018	Safety of machinery – Electrical equipment of machines – Part 1: General requirements
IEC 61000-6-7:2014	Electromagnetic compatibility (EMC) – Part 6-7: Generic standards – Immunity requirements for equipment intended to perform functions in a safety-related system (functional safety) in industrial locations
IEC 61326-3-1:2017	Electrical equipment for measurement, control and laboratory use – EMC requirements – Part 3-1: Immunity requirements for safety-related systems and for equipment intended to perform safety-related functions (functional safety) – General industrial applications
IEC 61508-1:2010	Functional safety of electrical/electronic/programmable electronic safety-related systems – Part 1: General requirements
IEC 61508-2:2010	Functional safety of electrical/electronic/programmable electronic safety-related systems – Part 2: Requirements for electrical/electronic/programmable electronic safety-related systems
IEC 61511-1:2017	Functional safety – Safety instrumented systems for the process industry sector
IEC 61800-5-2:2016 EN 61800-5-2:2007	Adjustable speed electrical power drive systems – Part 5-2: Safety requirements – Functional
EN IEC 62061:2021	Safety of machinery – Functional safety of safety-related control systems
EN ISO 13849-1:2015	Safety of machinery – Safety-related parts of control systems – Part 1: General principles for design
EN ISO 13849-2:2012	Safety of machinery – Safety-related parts of control systems – Part 2: Validation

The function also corresponds to Prevention of unexpected start-up as specified by EN ISO 14118:2018 (ISO 14118:2017), and Uncontrolled stop (stop category 0) as specified in EN/IEC 60204-1.

Compliance with the European Machinery Directive and the UK Supply of Machinery (Safety) Regulations

The Declarations of conformity are shown at the end of this chapter.

Wiring

For the electrical specifications of the STO connection, see the technical data of the control unit.

Activation switch

In the wiring diagrams, the activation switch has the designation [K]. This represents a component such as a manually operated switch, an emergency stop push button switch, or the contacts of a safety relay or safety PLC.

- In case a manually operated activation switch is used, the switch must be of a type that can be locked out to the open position.
- The contacts of the switch or relay must open/close within 200 ms of each other.
- An FSO safety functions module, an FSPS safety functions module or an FPTC thermistor protection module can also be used. For more information, see the module documentation.

Cable types and lengths

- ABB recommends double-shielded twisted-pair cable.
- Maximum cable lengths:
  - 300 m (1000 ft) between activation switch [K] and drive control unit
  - 60 m (200 ft) between multiple drives
  - 60 m (200 ft) between external power supply and first control unit

Note: A short-circuit in the wiring between the switch and an STO terminal causes a dangerous fault. Therefore, it is recommended to use a safety relay (including wiring diagnostics) or a wiring method (shield grounding, channel separation) which reduces or eliminates the risk caused by the short-circuit.

Note: The voltage at the STO input terminals of the control unit must be at least 17 V DC to be interpreted as “1”.

The pulse tolerance of the input channels is 1 ms.

Grounding of protective shields

- Ground the shield in the cabling between the activation switch and the control unit at the control unit only.
- Ground the shield in the cabling between two control units at one control unit only.

Single drive (internal power supply)

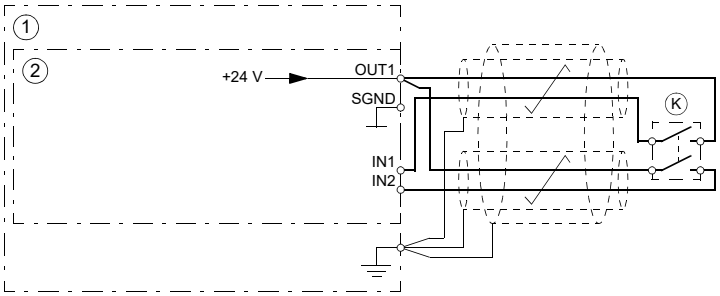

1	Drive
2	Control unit
K	Activation switch

Multiple drives

Internal power supply

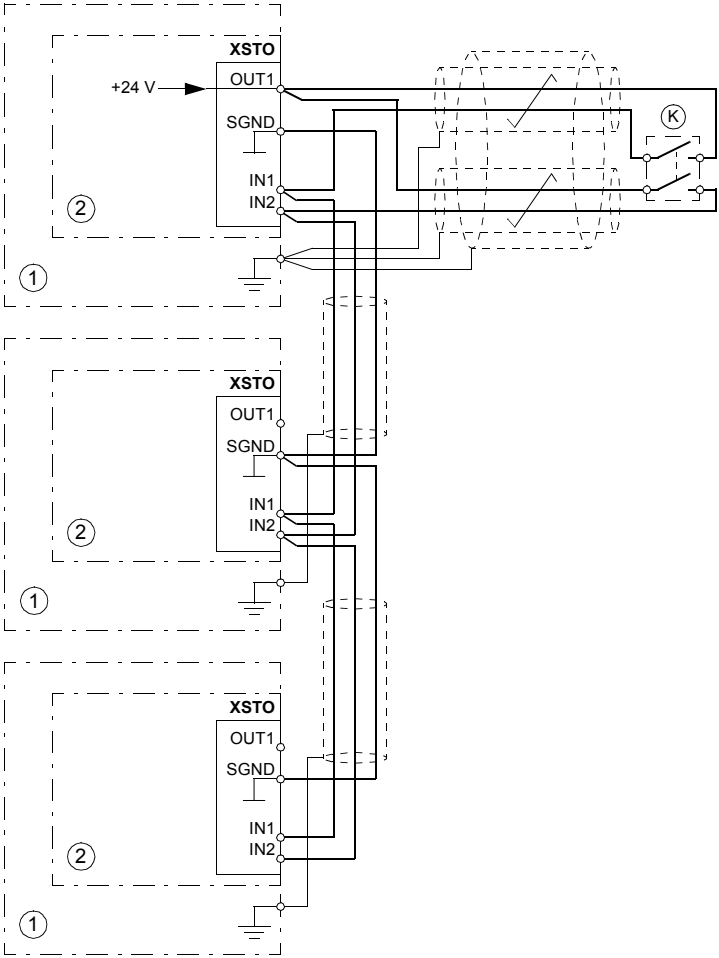

1	Drive
2	Control unit
K	Activation switch

External power supply

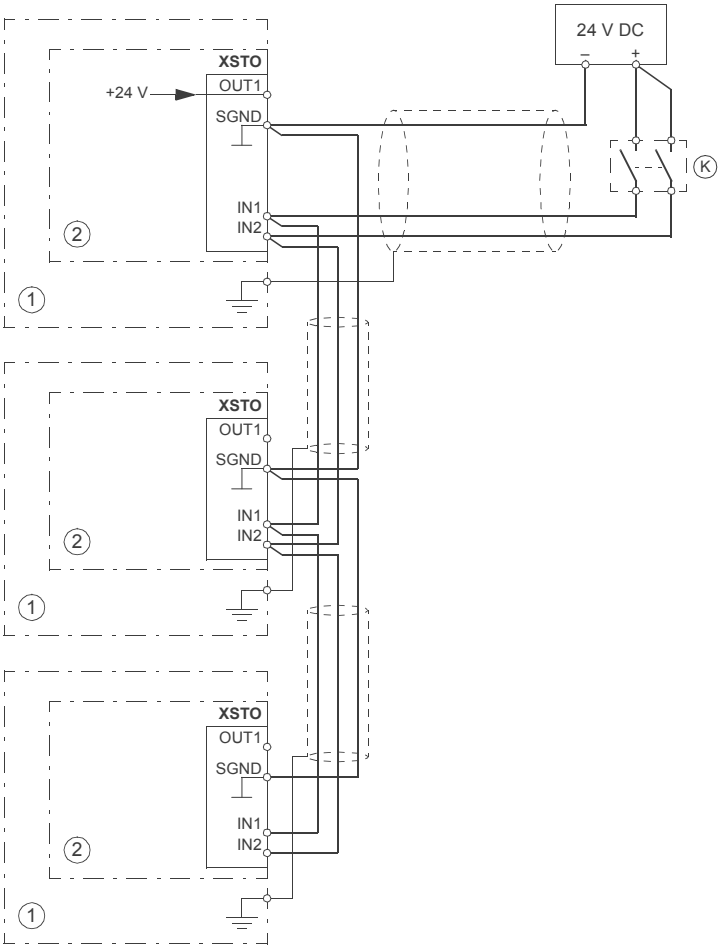

1	Drive
2	Control unit
K	Activation switch

Operation principle

1. The Safe torque off activates (the activation switch is opened, or safety relay contacts open).
2. The STO inputs of the drive control unit de-energize.
3. The control unit cuts off the control voltage from the output IGBTs.
4. The control program generates an indication as defined by parameter 31.22 (see the firmware manual of the drive).

   The parameter selects which indications are given when one or both STO signals are switched off or lost. The indications also depend on whether the drive is running or stopped when this occurs.

   Note: This parameter does not affect the operation of the STO function itself. The STO function will operate regardless of the setting of this parameter: a running drive will stop upon removal of one or both STO signals, and will not start until both STO signals are restored and all faults reset.

   Note: The loss of only one STO signal always generates a fault as it is interpreted as a malfunction of STO hardware or wiring.
5. The motor coasts to a stop (if running). The drive cannot restart while the activation switch or safety relay contacts are open. After the contacts close, a reset may be needed (depending on the setting of parameter 31.22). A new start command is required to start the drive.

Start-up including validation test

To ensure the safe operation of a safety function, validation is required. The final assembler of the machine must validate the function by performing a validation test. The test must be performed

1. at initial start-up of the safety function
2. after any changes related to the safety function (circuit boards, wiring, components, settings, replacement of inverter module, etc.)
3. after any maintenance work related to the safety function
4. after a drive firmware update
5. at the proof test of the safety function.

Competence

The validation test of the safety function must be carried out by a competent person with adequate expertise and knowledge of the safety function as well as functional safety, as required by IEC 61508-1 clause 6. The test procedures and report must be documented and signed by this person.

Validation test reports

Signed validation test reports must be stored in the logbook of the machine. The report shall include documentation of start-up activities and test results, references to failure reports and resolution of failures. Any new validation tests performed due to changes or maintenance shall be logged into the logbook.

Validation test procedure

After wiring the Safe torque off function, validate its operation as follows.

Note: If the drive is equipped with safety option +Q972, +Q973 or +Q982, also do the procedure shown in the FSO module documentation.
If an FSPS-21 module is installed, refer to its documentation.

Action	☑
WARNING! Obey the safety instructions. If you ignore them, injury or death, or damage to the equipment can occur.	☐
Make sure that the motor can be run and stopped freely during start-up.	☐
Stop the drive (if running), switch the input power off and isolate the drive from the power line using a disconnector.	☐
Check the STO circuit connections against the wiring diagram.	☐

Action	☑
Close the disconnector and switch the power on.	☐
Test the operation of the STO function when the motor is stopped. • Give a stop command for the drive (if running) and wait until the motor shaft is at a standstill. Make sure that the drive operates as follows: • Open the STO circuit. The drive generates an indication if one is defined for the 'stopped' state in parameter 31.22 (see the firmware manual). • Give a start command to verify that the STO function blocks the drive's operation. The motor should not start. • Close the STO circuit. • Reset any active faults. Restart the drive and check that the motor runs normally.	☐
Test the operation of the STO function when the motor is running. • Start the drive and make sure the motor is running. • Open the STO circuit. The motor should stop. The drive generates an indication if one is defined for the 'running' state in parameter 31.22 (see the firmware manual). • Reset any active faults and try to start the drive. • Make sure that the motor stays at a standstill and the drive operates as described above in testing the operation when the motor is stopped. • Close the STO circuit. • Reset any active faults. Restart the drive and check that the motor runs normally.	☐
Test the operation of the failure detection of the drive. The motor can be stopped or running. • Open the 1st input channel of the STO circuit. If the motor was running, it should coast to a stop. The drive generates an FA81 fault indication (see the firmware manual). • Give a start command to verify that the STO function blocks the drive's operation. The motor should not start. • Close the STO circuit. • Reset any active faults. Restart the drive and check that the motor runs normally. • Open the 2nd input channel of the STO circuit. If the motor was running, it should coast to a stop. The drive generates an FA82 fault indication (see the firmware manual). • Give a start command to verify that the STO function blocks the drive's operation. The motor should not start. • Close the STO circuit. • Reset any active faults. Restart the drive and check that the motor runs normally.	☐
Document and sign the validation test report which verifies that the safety function is safe and accepted for operation.	☐

Use

1. Open the activation switch, or activate the safety functionality that is wired to the STO connection.
2. The STO inputs on the drive control unit de-energize, and the control unit cuts off the control voltage from the output IGBTs.
3. The control program generates an indication as defined by parameter 31.22 (see the firmware manual of the drive).
4. The motor coasts to a stop (if running). The drive will not restart while the activation switch or safety relay contacts are open.
5. Deactivate the STO by closing the activation switch, or resetting the safety functionality that is wired to the STO connection.
6. Reset any faults before restarting.

WARNING!
The Safe torque off function does not disconnect the voltage of the main and auxiliary circuits from the drive. Therefore maintenance work on electrical parts of the drive or the motor can only be carried out after isolating the drive from the supply and all other voltage sources.

WARNING!
The drive cannot detect or memorize any changes in the STO circuitry when the drive control unit is not powered. If both STO circuits are closed and a level-type start signal is active when the power is restored, it is possible that the drive starts without a fresh start command. Take this into account in the risk assessment of the system.

WARNING!
Permanent magnet or synchronous reluctance [SynRM] motors only:

In case of a multiple IGBT power semiconductor failure, the drive can produce an alignment torque which maximally rotates the motor shaft by 180/*p* degrees (with permanent magnet motors) or 180/2*p* degrees (with synchronous reluctance [SynRM] motors) regardless of the activation of the Safe torque off function. *p* denotes the number of pole pairs.

Notes:

- If a running drive is stopped by using the Safe torque off function, the drive will cut off the motor supply voltage and the motor will coast to a stop. If this causes danger or is not otherwise acceptable, stop the drive and machinery using the appropriate stop mode before activating the Safe torque off function.
- The Safe torque off function overrides all other functions of the drive.

- The Safe torque off function is ineffective against deliberate sabotage or misuse.
- The Safe torque off function has been designed to reduce the recognized hazardous conditions. In spite of this, it is not always possible to eliminate all potential hazards. The assembler of the machine must inform the final user about the residual risks.

Maintenance

After the operation of the circuit is validated at start-up, the STO function shall be maintained by periodic proof testing. In high demand mode of operation, the maximum proof test interval is 20 years. In low demand mode of operation, the maximum proof test interval is 10 years; see section Safety data (page 230).

There are two alternative procedures for proof testing:

1. Perfect proof testing. It is assumed that all dangerous failures of the STO circuit are detected during the test. PFD_{avg} values for STO with the perfect proof testing procedure are given in the safety data section.
2. Simplified proof testing. This procedure is faster and simpler than perfect proof testing. Not all dangerous failures of the STO circuit are detected during the test. The PFD_{avg} value for STO with the simplified proof testing procedure is given in the safety data section.

Note: The proof testing procedures are only valid for proof testing (periodic test, item 5 under section Start-up including validation test) but not for re-validation after changes made in the circuit. Re-validation (items 1…4 under Start-up including validation test) must be done according to the initial validation procedure.

Note: See also the Recommendation of Use CNB/M/11.050 (published by the European co-ordination of Notified Bodies) concerning dual-channel safety-related systems with electromechanical outputs:

- When the safety integrity requirement for the safety function is SIL 3 or PL e (cat. 3 or 4), the proof test for the function must be performed at least every month.
- When the safety integrity requirement for the safety function is SIL 2 (HFT = 1) or PL d (cat. 3), the proof test for the function must be performed at least every 12 months.

The STO function of the drive does not contain any electromechanical components.

In addition to proof testing, it is a good practice to check the operation of the function when other maintenance procedures are carried out on the machinery.

Include the Safe torque off operation test described above in the routine maintenance program of the machinery that the drive runs.

If any wiring or component change is needed after start-up, or the parameters are restored, do the test given in section Validation test procedure (page 222).

Use only spare parts approved by ABB.

Record all maintenance and proof test activities in the machine logbook.

Competence

The maintenance and proof test activities of the safety function must be carried out by a competent person with adequate expertise and knowledge of the safety function as well as functional safety, as required by IEC 61508-1 clause 6.

Perfect proof test procedure

Action	☑
WARNING! Obey the safety instructions. If you ignore them, injury or death, or damage to the equipment can occur.	☐
Test the operation of the STO function. If the motor is running, it will stop during the test. • Give a stop command for the drive (if running) and wait until the motor shaft is at a standstill. Make sure that the drive operates as follows: • Open the STO circuit. The drive generates an indication if one is defined for the 'stopped' state in parameter 31.22 (see the firmware manual). • Close the STO circuit. • Reset any active faults. Restart the drive and check that the motor runs normally.	☐
Test the operation of the failure detection of the drive. The motor can be stopped or running. • Open the 1st input channel of the STO circuit. If the motor was running, it should coast to a stop. The drive generates an FA81 fault indication (see the firmware manual). • Close the STO circuit. • Reset any active faults. • Open the 2nd input channel of the STO circuit. If the motor was running, it should coast to a stop. The drive generates an FA82 fault indication (see the firmware manual). • Close the STO circuit. • Reset any active faults. Restart the drive and check that the motor runs normally.	☐
Document and sign the test report to verify that the safety function has been tested according to the procedure.	☐

Simplified proof test procedure

Action	☑
WARNING! Obey the safety instructions. If you ignore them, injury or death, or damage to the equipment can occur.	☐

Action	☑
Test the operation of the STO function. If the motor is running, it will stop during the test. • Give a stop command for the drive (if running) and wait until the motor shaft is at a standstill. Make sure that the drive operates as follows: • Open the STO circuit. The drive generates an indication if one is defined for the 'stopped' state in parameter 31.22 (see the firmware manual). • Close the STO circuit. • Reset any active faults. Restart the drive and check that the motor runs normally.	☐
Document and sign the test report to verify that the safety function has been tested according to the procedure.	☐

Fault tracing

The indications given during the normal operation of the Safe torque off function are selected by drive control program parameter 31.22.

The diagnostics of the Safe torque off function cross-compare the status of the two STO channels. In case the channels are not in the same state, a fault reaction function is performed and the drive trips on an FA81 or FA82 fault. An attempt to use the STO in a non-redundant manner, for example activating only one channel, will trigger the same reaction.

See the firmware manual of the drive control program for the indications generated by the drive, and for details on directing fault and warning indications to an output on the control unit for external diagnostics.

Any failures of the Safe torque off function must be reported to ABB.

Safety data

The safety data for the Safe torque off function is given below.

Note: The safety data is calculated for redundant use, and applies only if both STO channels are used.

Frame size	SIL	SC	PL	PFH (T_1 = 20 a) (1/h)	PFD_{avg}			$MTTF_D$ (a)	DC (%)	SFF (%)	Cat.	HFT	CCF	T_M (a)	PFH_{diag} (1/h)	λ_{Diag_s} (1/h)	λ_{Diag_d} (1/h)
					Perfect proof test		Simplified proof test										
					T_1 = 5 a	T_1 = 10 a	T_1 = 5 or 10 a										
R3	3	3	e	2.68E-09	5.58E-05	1.12E-04	2.23E-04	36908	≥90	91.50	3	1	80	20	1.40E-12	5.99E-08	1.40E-10
R6	3	3	e	2.68E-09	5.58E-05	1.12E-04	2.23E-04	36908	≥90	91.50	3	1	80	20	1.40E-12	5.99E-08	1.40E-10
R8	3	3	e	3.21E-09	6.67E-05	1.34E-04	2.67E-04	9630	≥90	99.10	3	1	80	20	1.40E-12	1.91E-07	1.40E-10
3AXD10001609377 A																	

- The following temperature profile is used in safety value calculations:

  - 670 on/off cycles per year with ΔT = 71.66 °C
  - 1340 on/off cycles per year with ΔT = 61.66 °C
  - 30 on/off cycles per year with ΔT = 10.0 °C
  - 32 °C board temperature at 2.0% of time
  - 60 °C board temperature at 1.5% of time
  - 85 °C board temperature at 2.3% of time.
- The STO is a type A safety component as defined in IEC 61508-2.
- Relevant failure modes:
  - The STO trips spuriously (safe failure)
  - The STO does not activate when requested
  - A fault exclusion on the failure mode “short circuit on printed circuit board” has been made (EN 13849-2, table D.5). The analysis is based on an assumption that one failure occurs at one time. No accumulated failures have been analyzed.
- STO response times:
  - STO reaction time (shortest detectable break): 1 ms
  - STO response time:
    - Frames R3 and R6: 2 ms (typical), 10 ms (maximum)
    - Frame R8: 2 ms (typical), 15 ms (maximum)
  - Fault detection time: Channels in different states for longer than 200 ms
  - Fault reaction time: Fault detection time + 10 ms.
- Indication delays:
  - STO fault indication (parameter 31.22) delay: < 500 ms
  - STO warning indication (parameter 31.22) delay: < 1000 ms.

Terms and abbreviations

Term or abbreviation	Reference	Description
Cat.	EN ISO 13849-1	Classification of the safety-related parts of a control system in respect of their resistance to faults and their subsequent behavior in the fault condition, and which is achieved by the structural arrangement of the parts, fault detection and/or by their reliability. The categories are: B, 1, 2, 3 and 4.
CCF	EN ISO 13849-1	Common cause failure (%)
DC	EN ISO 13849-1	Diagnostic coverage (%)
HFT	IEC 61508	Hardware fault tolerance
$MTTF_D$	EN ISO 13849-1	Mean time to dangerous failure: (Total number of life units) / (Number of dangerous, undetected failures) during a particular measurement interval under stated conditions

Term or abbreviation	Reference	Description
PFD_{avg}	IEC 61508	Average probability of dangerous failure on demand, that is, mean unavailability of a safety-related system to perform the specified safety function when a demand occurs
PFH	IEC 61508	Average frequency of dangerous failures per hour, that is, average frequency of a dangerous failure of a safety related system to perform the specified safety function over a given period of time
PFH_{diag}	IEC/EN 62061	Average frequency of dangerous failures per hour for the diagnostic function of STO
PL	EN ISO 13849-1	Performance level. Levels a…e correspond to SIL
Proof test	IEC 61508, IEC 62061	Periodic test performed to detect failures in a safety-related system so that, if necessary, a repair can restore the system to an "as new" condition or as close as practical to this condition
SC	IEC 61508	Systematic capability (1…3)
SFF	IEC 61508	Safe failure fraction (%)
SIL	IEC 61508	Safety integrity level (1…3)
STO	IEC/EN 61800-5-2	Safe torque off
T_1	IEC 61508-6	Proof test interval. T_1 is a parameter used to define the probabilistic failure rate (PFH or PFD) for the safety function or subsystem. Performing a proof test at a maximum interval of T_1 is required to keep the SIL capability valid. The same interval must be followed to keep the PL capability (EN ISO 13849) valid. See also section Maintenance.
T_M	EN ISO 13849-1	Mission time: the period of time covering the intended use of the safety function/device. After the mission time elapses, the safety device must be replaced. Note that any T_M values given cannot be regarded as a guarantee or warranty.
λ_{Diag_d}	IEC 61508-6	Dangerous failure rate (per hour) of the diagnostics function of STO
λ_{Diag_s}	IEC 61508-6	Safe failure rate (per hour) of the diagnostics function of STO

TÜV certificate

The TÜV certificate is available on the Internet at www.abb.com/drives/documents.

Declarations of conformity

EU Declaration of Conformity

Machinery Directive 2006/42/EC

We

Manufacturer:	ABB Oy
Address:	Hiomotie 13, 00380 Helsinki, Finland.
Phone:	+358 10 22 11

declare under our sole responsibility that the following products:

Frequency converters

ACS880-01/-11/-31
ACS880-04/-04F/-M04/-14/-34

with regard to the safety functions

- **Safe Torque Off**
- **Safe stop 1, Safe stop emergency, Safely-limited speed, Safe maximum speed, Safe brake control, Prevention of unexpected start-up (with FSO-12 option module, +Q973, encoderless)**
- **Safe stop 1, Safe stop emergency, Safely-limited speed, Safe maximum speed, Safe brake control, Safe speed monitor, Safe direction, Prevention of unexpected start-up (with FSO-21 and FSE-31 option modules, +Q972 and +L521, encoder supported)**
- **Safe motor temperature (with FPTC-01 thermistor protection module, +L536)**
- **Safe stop 1 (SS1-t, with FSPS-21 PROFIsafe module, +Q986)**

are in conformity with all the relevant safety component requirements of EU Machinery Directive 2006/42/EC, when the listed safety functions are used for safety component functionality.

The following harmonized standards have been applied:

EN 61800-5-2:2007	Adjustable speed electrical power drive systems – Part 5-2: Safety requirements - Functional
EN IEC 62061:2021	Safety of machinery – Functional safety of safety-related control systems
EN ISO 13849-1:2015	Safety of machinery – Safety-related parts of control systems. Part 1: General requirements
EN ISO 13849-2:2012	Safety of machinery – Safety-related parts of the control systems. Part 2: Validation
EN 60204-1:2018	Safety of machinery – Electrical equipment of machines – Part 1: General requirements

The following other standards have been applied:

IEC 61508:2010, parts 1-2	Functional safety of electrical / electronic / programmable electronic safety-related systems
IEC 61800-5-2:2016	Adjustable speed electrical power drive systems – Part 5-2: Safety requirements - Functional

The product(s) referred in this Declaration of conformity fulfil(s) the relevant provisions of other European Union Directives which are notified in Single EU Declaration of conformity 3AXD10000497831.

Authorized to compile the technical file: ABB Oy, Hiomotie 13, 00380 Helsinki, Finland.

Helsinki, August 31, 2022
Signed for and on behalf of:

Mika Vartiainen
Local Division
Manager
ABB Oy

Aaron D. Wade
Product Unit Manager
ABB Oy

Document number 3AXD10000099646

Page 1 of 1

Declaration of Conformity

Supply of Machinery (Safety) Regulations 2008

We

Manufacturer:	ABB Oy
Address:	Hiomotie 13, 00380 Helsinki, Finland.
Phone:	+358 10 22 11

declare under our sole responsibility that the following products:

Frequency converters

ACS880-01/-11/-31
ACS880-04/-04F/-M04/-14/-34

with regard to the safety functions

- **Safe Torque Off**
- **Safe stop 1, Safe stop emergency, Safely-limited speed, Safe maximum speed, Safe brake control, Prevention of unexpected start-up (with FSO-12 option module, +Q973, encoderless)**
- **Safe stop 1, Safe stop emergency, Safely-limited speed, Safe maximum speed, Safe brake control, Safe speed monitor, Safe direction, Prevention of unexpected start-up (with FSO-21 and FSE-31 option modules, +Q972 and +L521, encoder supported)**
- **Safe motor temperature (with FPTC-01 thermistor protection module, +L536)**
- **Safe stop 1 (SS1-t, with FSPS-21 PROFIsafe module, +Q986)**

are in conformity with all the relevant safety component requirements of the Supply of Machinery (Safety) Regulations 2008, when the listed safety functions are used for safety component functionality.

The following designated standards have been applied:

EN 61800-5-2:2007	Adjustable speed electrical power drive systems – Part 5-2: Safety requirements - Functional
EN IEC 62061:2021	Safety of machinery – Functional safety of safety-related control systems
EN ISO 13849-1:2015	Safety of machinery – Safety-related parts of control systems. Part 1: General requirements
EN ISO 13849-2:2012	Safety of machinery – Safety-related parts of the control systems. Part 2: Validation
EN 60204-1:2018	Safety of machinery – Electrical equipment of machines – Part 1: General requirements

The following other standards have been applied:

EN 61508:2010, parts 1-2	Functional safety of electrical / electronic / programmable electronic safety-related systems
EN 61800-5-2:2017	Adjustable speed electrical power drive systems – Part 5-2: Safety requirements - Functional

The product(s) referred in this declaration of conformity fulfil(s) the relevant provisions of other UK statutory requirements, which are notified in a single declaration of conformity 3AXD10001326405.

Authorized to compile the technical file: ABB Limited, Daresbury Park, Cheshire, United Kingdom, WA4 4BT.

Helsinki, August 31, 2022
Signed for and on behalf of:

Mika Vartiainen
Local Division
Manager
ABB Oy

Aaron D. Wade
Product Unit Manager
ABB Oy

Document number 3AXD10001329538

15

Common mode, du/dt and sine filters

Contents of this chapter

This chapter describes how to select additional filters for the drive.

Common mode filters

For need of common mode filter, see section Examining the compatibility of the motor and drive (page 57). Common mode filter for frame R8 is available with option code +E208 also with order number 3AXD50000017270. For frames R3 and R6 the filter is built-in.

For installation instructions, see Common mode filter kit for ACS880-01 frame R7, and for ACS880-11, ACS880-31 frame R8 (option +E208) installation instructions (3AXD50000015179 [English]).

d*u*/d*t* filters

When is a d*u*/d*t* filter needed?

See section Examining the compatibility of the motor and drive (page 57).

d*u*/d*t* filter types

Type ACS880-11	d*u*/d*t* filter type	Type ACS880-11	d*u*/d*t* filter type
U_n = 400 V		U_n = 500 V	
09A4-3	NOCH0016-6X	07A6-5	NOCH0016-6X
12A6-3	NOCH0016-6X	11A0-5	NOCH0016-6X
017A-3	NOCH0030-6X	014A-5	NOCH0030-6X
025A-3	NOCH0030-6X	021A-5	NOCH0030-6X
032A-3	NOCH0070-6X	027A-5	NOCH0070-6X
038A-3	NOCH0070-6X	034A-5	NOCH0070-6X
045A-3	NOCH0070-6X	040A-5	NOCH0070-6X
061A-3	NOCH0070-6X	052A-5	NOCH0070-6X
072A-3	NOCH0120-6X	065A-5	NOCH0120-6X
087A-3	NOCH0120-6X	077A-5	NOCH0120-6X
105A-3	NOCH0120-6X	101A-5	NOCH0120-6X
145A-3	FOCH0260-70	124A-5	FOCH0260-7X
169A-3	FOCH0260-70	156A-5	FOCH0260-7X
206A-3	FOCH0260-70	180A-5	FOCH0260-7X
			3AXD00000588487

Description, installation and technical data of the filters

See AOCH and NOCH du/dt filters hardware manual (3AFE58933368 [English]) or FOCHxxx-xx du/dt filters hardware manual (3AFE68577519 [English]).

Sine filters

See section Examining the compatibility of the motor and drive (page 57).

Selecting a sine filter for the drive

The table below lists the preselected sine filters by TDK (previously Epcos).

Type ACS880-11	Sine filter type	I_2	P_n	Heat dissipation			Noise
				Drive	Filter	Total	
		A	kW	W	W	W	dB(A)
U_n = 400 V							
09A4-3	B84143V0011R229	9.2	4.0	226	80	316	72
12A6-3	B84143V0016R229	12.1	5.5	329	80	409	72
017A-3	B84143V0025R229	16	7.5	395	140	535	75
025A-3	B84143V0025R229	24	11	579	140	719	75
032A-3	B84143V0033R229	31	15	625	160	785	75
038A-3	B84143V0050R229	37	18.5	751	220	971	78

Type ACS880-11	Sine filter type	I_2	P_n	Heat dissipation			Noise
				Drive	Filter	Total	
		A	kW	W	W	W	dB(A)
045A-3	B84143V0050R229	43	22	912	220	1132	78
061A-3	B84143V0066R229	58	30	1088	250	1338	78
072A-3	B84143V0075R229	64	30	1502	310	1812	79
087A-3	B84143V0095R229	77	37	1904	400	2304	79
105A-3	B84143V0130S230	91	55	1877	600	2477	80
145A-3	B84143V0162S229	126	75	2963	550	3513	80
169A-3	B84143V0162S229	153	90	3168	550	3718	80
206A-3	B84143V0230S229	187	110	3990	900	4890	80
U_n = 500 V							
07A6-5	B84143V0011R229	7.0	3.0	219	90	309	72
11A0-5	B84143V0011R229	10.2	4.0	278	90	368	72
014A-5	B84143V0016R229	13	5.5	321	80	401	70
021A-5	B84143V0025R229	20	7.5	473	140	613	75
027A-5	B84143V0033R229	25	11.0	625	160	785	75
034A-5	B84143V0050R229	32	15	711	220	931	78
040A-5	B84143V0050R229	35	18.5	807	220	1027	78
052A-5	B84143V0066R229	44	22	960	250	1210	78
065A-5	B84143V0066R229	52	30	1223	250	1473	78
077A-5	B84143V0075R229	61	37	1560	310	1870	78
101A-5	B84143V0130S230	80	45.0	1995	630	2625	80
124A-5	B84143V0130S230	104	55.0	2800	630	3430	80
158A-5	B84143V0162S229	140	75.0	3168	550	3718	80
180A-5	B84143V0162S229	161	90.0	3872	550	4422	80
							3AXD00000588487

Definitions

P_n	Typical motor power
I_2	Rated current of the drive-filter combination available continuously without overload at 40 °C.
Noise	Noise level is a combined value for the drive and the filter. Heat dissipation is a value for the filter.

Derating

See section Deratings for special settings in the drive control program (page 168).

Description, installation and technical data

For the filter data sheets, go to http://en.tdk.eu/. See also Sine filters hardware manual (3AXD50000016814 [English]).

Further information

Product and service inquiries

Address any inquiries about the product to your local ABB representative, quoting the type designation and serial number of the unit in question. A listing of ABB sales, support and service contacts can be found by navigating to www.abb.com/searchchannels.

Product training

For information on ABB product training, navigate to new.abb.com/service/training.

Providing feedback on ABB manuals

Your comments on our manuals are welcome. Navigate to new.abb.com/drives/manuals-feedback-form.

Document library on the Internet

You can find manuals and other product documents in PDF format on the Internet at www.abb.com/drives/documents.

a4 (frozen)
PDF-A5
Created 2022-10-14, 11:26:18

www.abb.com/drives

3AXD50000045932H

© Copyright 2022 ABB. All rights reserved.
Specifications subject to change without notice.

3AXD50000045932 Rev H (EN)
2022-10-14