ABB INDUSTRIAL DRIVES

ACS880-1007LC liquid cooling unit

User's manual

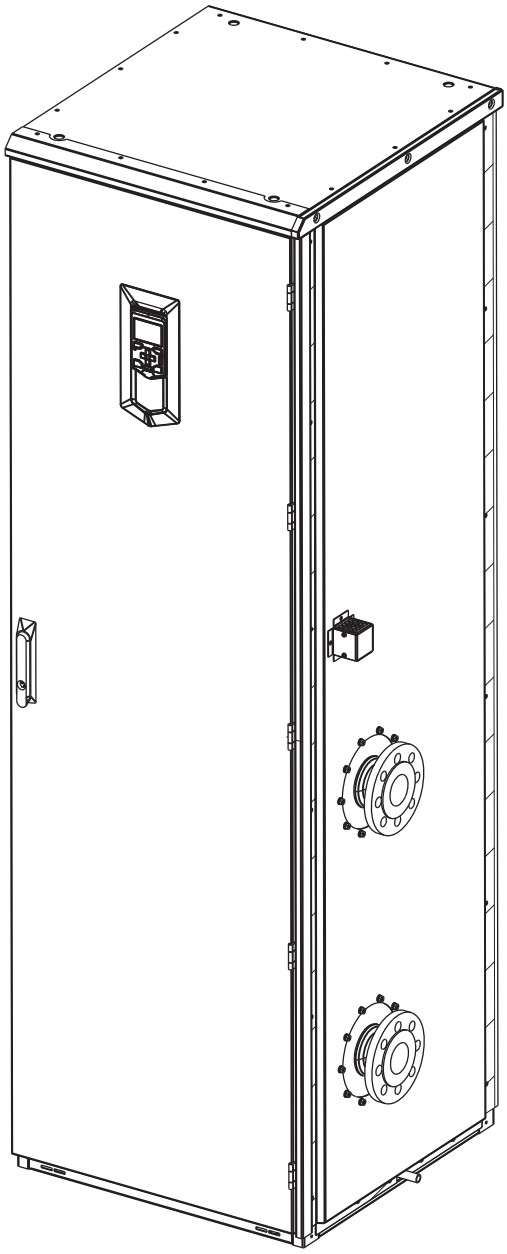

ACS880-1007LC liquid cooling unit

User's manual

Table of contents

3. Mechanical installation

4. Electrical installation

6. Start-up

3AXD50000129607 Rev F
EN
Original instructions
EFFECTIVE: 2022-08-31

Table of contents

1 Introduction to the manual

Contents of this chapter 11
Applicability 11
Safety instructions 11
Target audience 11
Categorization by option code 11
Use of component designations 12
Terms and abbreviations 12
Related manuals 13
Drive manuals 13
Component manuals 14

2 Operation principle and hardware description

Contents of this chapter 15
Overview 15
Cooling unit as part of line-up 16
Cooling unit separate from line-up (stand-alone) 17
Layout drawings 18
Layout drawing – ACS880-1007LC-0070 in cabinet line-up 18
ACS880-1007LC-0070 component designations 19
Layout drawing – ACS880-1007LC-0195 in cabinet line-up 20
ACS880-1007LC-0195 component designations 22
Layout drawing – ACS880-1007LC-0195 stand-alone (option +C139) 23
Layout drawing – 2-way control valve cubicle (option +C242) for ACS880-1007LC-0070 24
Layout drawing – 2-way control valve cubicle (option +C242) for ACS880-1007LC-0195 25
Swing-out frame for electrical devices in ACS880-1007LC-0070 26
Swing-out frame for electrical devices in ACS880-1007LC-0195 27
Control interfaces 27
General 27
Control panel 28
IO interface of the control unit 28
IO interface of the FAIO-01 analog interface module 29
Use of the control unit expansion slots 29
PC connection 29
Manual pump control 29
Type designation label 30
Type designation key 30
Basic code 31
Option codes 31

3 Mechanical installation

Contents of this chapter 35
Designing the internal cooling circuit 35

Installing the cooling unit 35

4 Electrical installation

Contents of this chapter 37
Electrical safety precautions 37
Connecting the power cables 39
Connection diagram (cooling unit in drive cabinet line-up) 39
Connection diagram (stand-alone cooling unit) 40
Grounding 40
Connection procedure 41
Connecting the control cables 42
Guidelines for connecting the control cables 43
Control cable connection procedure 44
Routing the control cables inside the cabinet 45

5 Installation checklist

Contents of this chapter 47
Checklist 47

6 Start-up

Contents of this chapter 49
Safety 49
Before start-up 50
Adjusting air pressure of the expansion vessel 50
About the expansion vessel 50
Pressure adjustment procedure 50
Filling up the cooling circuit and starting the cooling unit 51
Basic settings in the control program 53
On-load settings 54

7 Maintenance

Contents of this chapter 55
Maintenance intervals 55
Description of symbols 55
Recommended maintenance intervals after start-up 55
Adding coolant 56
Draining the cooling unit 57
Storing the cooling unit 58
Bleeding the cooling system 58
Checking the quality of the coolant 59
Cleaning and drying the leakage detector 59
ACS880-1007LC-0070 – Replacing the pump unit 60
ACS880-1007LC-0195 – Replacing the pump unit 72
ACS880-1007LC-0070 – replacing the swing-out frame cooling fan 85
ACS880-1007LC-0195 – replacing the swing-out frame cooling fan 86

8 Program features

Contents of this chapter 87
Basics 87

Start/stop control, and reset 87
Settings and diagnostics 87
Pump control 88
Basic operation 88
Alternation 88
Redundancy 88
Two pumps running 88
Standby 89
Delayed cooling 89
Pressure monitoring functions 89
Operation of the Pressure difference monitoring function 89
Settings and diagnostics 90
Temperature monitoring functions 90
Settings and diagnostics 90
Leakage monitoring function 90
Settings and diagnostics 90
2-way control valve function 91
Settings and diagnostics 91
Miscellaneous 91
User lock 91

9 Parameters

Contents of this chapter 93
Terms and abbreviations 93
Summary of parameter groups 94
01 Actual values 95
04 Warnings and faults 95
06 Control and status words 97
07 System info 98
15 I/O extension module 2 99
16 I/O extension module 3 99
20 LCU control 100
22 Coolant temperature control 101
31 Fault functions 102
47 Data storage 103
49 Panel port communication 104
50 Fieldbus adapter (FBA) 105
51 FBA A settings 112
52 FBA A data in 113
53 FBA A data out 114
54 FBA B settings 116
55 FBA B data in 117
56 FBA B data out 118
60 DDCS communication 119
61 D2D and DDCS transmit data 120
62 D2D and DDCS receive data 122
96 System 123

10 Fault tracing

Contents of this chapter 129
Warnings 129

Faults 133
Additional information 135
Indications 135
Warnings and faults 135
Editable messages 135
Warning/fault history and analysis 135
Event logs 135
Other data loggers 136
Parameters that contain warning/fault information 136
QR code generation for mobile service application 136

11 Fieldbus control through a fieldbus adapter

Contents of this chapter 137
System overview 137
Basics of the fieldbus control interface 138
Control word (CW) and Status word (SW) 140
Debugging the network words 140
Actual values act1 and act2 140
Debugging the network words 140
References ref1 and ref2 140
Setting up the cooling unit for fieldbus control (adapter A) 140

12 Internal cooling circuit

Contents of this chapter 143
Applicability 143
Internal cooling system 143
Maintenance intervals 145
Technical data 145
Coolant specification 145
Coolant type 145
Temperature limits 145
Pressure limits 147
Coolant flow rate limits 147
Cooling circuit materials 147

13 Technical data

Contents of this chapter 149
Nominal cooling power, losses and pressure drop 149
Dimensions, weight and noise 149
Protection classes 150
Ambient conditions 150
Coolant flow and quantity 150
Pump and pump motor 150
Pump motor power supply 152
Requirements for pump power supply (Q200) 152
Auxiliary power supply for the control circuits 153
Requirements for control circuit power supply (Q210) 154
Power supply for the cabinet heater (option +G300) and lighting (option +G301) ..154
Requirements for heating and lighting power supply (Q295) 155
Filling pump 155
Drain/fill/bleed hoses 156

Drain box 156
Pipe flanges 156
Internal cooling circuit data 157
Control valve (V0016) setting and coolant flow 157
External cooling circuit data 159
Liquid quality for standard heat exchanger and piping 159
Temperature and pressure limits 159
Recommended pipe size and material 159
Heat exchanger pressure drop charts 160
Colors 160
Materials 161
Liquid cooling unit 161
Package materials for liquid cooling unit 161
Package materials for options 161
Manuals 161
Disposal 161
Applicable standards 162
Compliance with the Pressure Equipment Directive (PED) 162
Disclaimers 162
Generic disclaimer 162
Cybersecurity disclaimer 162

14 Piping and instrumentation diagrams

Contents of this chapter 163
ACS880-1007LC-0070 164
ACS880-1007LC-0070 component designations 165
ACS880-1007LC-0195 166
ACS880-1007LC-0195 component designations 167

15 Example circuit diagrams

Contents of this chapter 169
Circuit diagrams 170

16 Dimension drawings

Contents of this chapter 179
Cable entry (bottom) 180
ACS880-1007LC-0070 in cabinet line-up (at right), external cooling circuit from right 181
ACS880-1007LC-0070 stand-alone cooling unit, external cooling circuit from right 182
ACS880-1007LC-0195 in cabinet line-up (at right), external cooling circuit from right 183
ACS880-1007LC-0195 stand-alone cooling unit, external cooling circuit from right 184
2-way control valve cubicle (option +C242) for ACS880-1007LC-0070 185
2-way control valve cubicle (option +C242) for ACS880-1007LC-0195 186
½ inch socket wrench adapter for valve without handle 187
ACS880-1007LC-0070 pipe flange 187
ACS880-1007LC-0195 pipe flange 188

Further information

1

Introduction to the manual

Contents of this chapter

This chapter contains general information of the manual, a list of related manuals, and a list of terms and abbreviations.

Applicability

This manual is applicable to ACS880-1007LC cooling units with control program firmware version 2.81.0.0 or later.

Safety instructions

For the safety instructions of ACS880 single drives, refer to the drive hardware manual. For the safety instructions of ACS880 liquid-cooled multidrives, refer to ACS880 liquid-cooled multidrives cabinets and modules safety instructions (3AXD50000048633 [English]).

Target audience

This manual is intended for people who plan the installation, install, start up, use and service the cooling unit. Read the manual before working on the unit. You are expected to know the fundamentals of electricity, wiring, electrical components and electrical schematic symbols.

Categorization by option code

The information which only concerns certain optional selection is marked with the option code in brackets. For example (option +E205). The options included in the unit are visible on the type designation label. The type designation key in the manual describes the meaning of the option codes.

Use of component designations

Some device names in the manual include the component designation in brackets (for example, [Q20]). This will help you to identify the components in the circuit diagrams of the drive.

Terms and abbreviations

Term	Description
ACS-AP-I	Industrial assistant non-Bluetooth control panel
ACS-AP-W	Industrial assistant control panel with Bluetooth interface
Cabinet	An enclosure that consists of one or more cubicles
Control unit	The part in which the control program runs.
Control word	16-bit or 32-bit word from a controller to the controlled device with bit-coded control signals (sometimes called the Command word).
Cubicle	One section of a cabinet-installed drive. A cubicle is typically behind a door of its own.
Cyclic communication	Communication in which messages are sent cyclically at pre-defined intervals
DDCS	Distributed drives communication system protocol
Drive	Frequency converter for controlling AC motors
EMC	Electromagnetic compatibility
FAIO-01	Analog I/O extension module
Fault	Event that leads to tripping of the device
FBA	Fieldbus adapter
FDCO	Optical DDCS communication module
FDPI	Diagnostics and panel interface board
FENA-21	Optional Ethernet adapter module for EtherNet/IP™, Modbus TCP and PROFINET IO protocols, 2-port
Fieldbus adapter module	Device through which the drive is connected to an external communication network, that is, a fieldbus
Frame, frame size	Physical size of the drive or power module
Inverter module	Inverter bridge, related components and drive DC link capacitors enclosed in a metal frame or enclosure. Intended for cabinet installation.
Inverter unit	Inverter module(s) under control of one control unit, and related components. One inverter unit typically controls one motor.
IT system	Type of supply network that has no (low-impedance) connection to ground. See IEC 60364-5.
LCU	Liquid cooling unit
Multidrive	Drive for controlling several motors which are typically coupled to the same machinery. Includes one supply unit, and one or several inverter units.
Parameter	In the drive control program, user-adjustable operation instruction to the drive, or signal measured or calculated by the drive. In some (for example fieldbus) contexts, a value that can be accessed as an object. For example, variable, constant, or signal.
PE	Protective earth (ground)
PI	Proportional-integral
PLC	Programmable logic controller
Power module	Common term for drive module, inverter module, supply module, brake chopper module etc.
Status word	16-bit or 32-bit word from a controlled device to the controller with bit-coded status signals
Supply module	Rectifier bridge and related components enclosed in a metal frame or enclosure. Intended for cabinet installation.
Supply unit	Supply module(s) under control of one control unit, and related components.

Term	Description
TN system	Type of supply network that provides a direct connection to ground
Warning	Signal caused by an existing alarm which does not lead to tripping of the device
ZCU	Type of control unit

Related manuals

Drive manuals

You can find manuals and other product documents in PDF format on the Internet at www.abb.com/drives/documents.

The codes and links below open an online listing of related manuals.

ACS880-07LC related manuals

ACS880-17LC related manuals

ACS880-37LC related manuals

ACS880 multidrives related manuals

Component manuals

Component manual	Manufacturer website
Fusion-bonded plate heat exchangers Instruction Manual	www.alfalaval.com
Lowara e-SV series multistage vertical pump - Installation, Operation, and Maintenance Instructions	www.xylem.com
SPIRA-TROL K and L Series Two-port Control Valves Installation and Maintenance Instructions	www.spiraxsarco.com
AEL6 Series Smart Electric Actuators for DN15 to DN100 Control valves Installation and Maintenance Instructions	www.spiraxsarco.com
Flanged Strainers Installation and Maintenance Instructions	www.spiraxsarco.com
AUMA EQ60 part-turn actuator documentation	www.auma.com

2

Operation principle and hardware description

Contents of this chapter

This chapter describes the operation principle and the hardware of the cooling unit.

Overview

ACS880-1007LC is a liquid cooling unit (LCU) for ACS880 liquid-cooled drives. The cooling unit has a pump that circulates the coolant in the drive internal cooling circuit. The internal cooling circuit is a closed-loop cooling system. It contains the piping and the air-to-liquid heat exchangers in the drive. A liquid-to-liquid heat exchanger conducts the heat from the internal cooling circuit to a user-defined external cooling circuit.

The internal cooling circuit has an expansion vessel. The expansion vessel dampens the pressure variations caused by changes in temperature and liquid volume. The expansion vessel is located at the inlet of the cooling unit pump to provide a stable pressure for the pump. The internal cooling circuit also has a control valve that controls the flow rate of the coolant. The control valve is adjustable. If the cooling unit is part of a drive line-up, ABB does the control valve adjustment at the factory. Optimal flow rate depends on the size of the drive and cooling circuit.

The user must design, build and connect the external cooling circuit to the cooling unit. The user must also balance the cooling capacity of the cooling unit with the drive losses to sustain efficient cooling. This is typically done by adjusting or controlling the flow in the external cooling circuit. There is a 2-way control valve available (option +C242) for the control of the external circuit coolant flow.

The cooling unit is available as a one-pump unit or a two-pump unit. In the two-pump unit:

- only one pump is in operation at the time (with option +C213, the two pumps operate at the same time)
- the cooling unit alternates the pump in duty automatically, which increases the service life of the pumps
- if a pump failure occurs, the user can disconnect the pump from the system and continue the operation, which reduces downtime.

Cooling unit as part of line-up

A diagram of a cooling unit as part of a drive line-up (option +C138) is shown below.

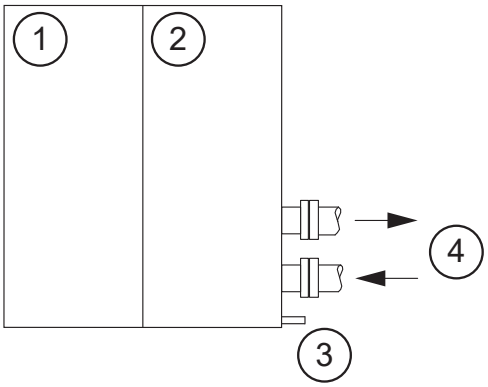

1	Drive
2	Cooling unit
3	Bottom drain pipe
4	Connection to user-defined external cooling circuit

Cooling unit separate from line-up (stand-alone)

A diagram of a stand-alone cooling unit (option +C139) is shown below.

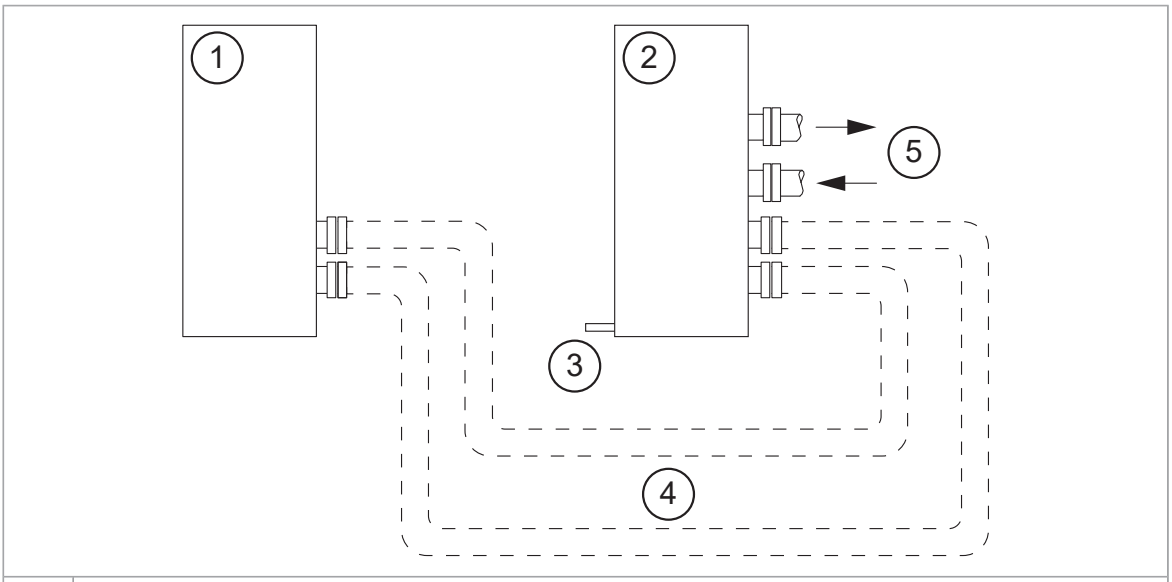

1	Drive
2	Cooling unit
3	Bottom drain pipe
4	Internal cooling circuit piping (user-defined)
5	Connection to user-defined external cooling circuit

Layout drawings

Layout drawing – ACS880-1007LC-0070 in cabinet line-up

The illustration that follows shows the interior of the cooling unit. In this example, the cooling unit is attached to the right end of the drive cabinet line-up, and the user connects the external cooling circuit to the right side of the unit.

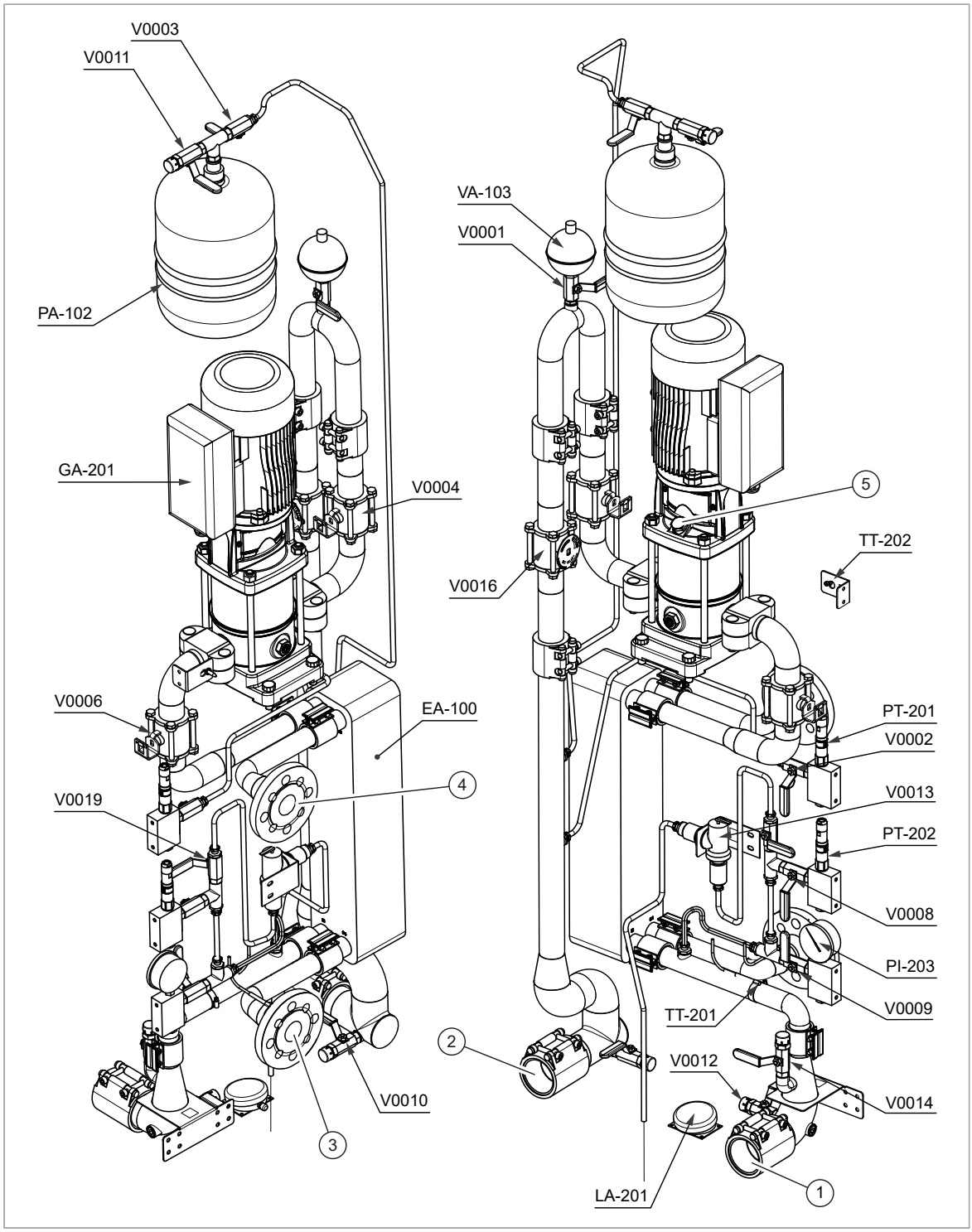

ACS880-1007LC-0070 component designations

The table below lists the component designations used in layout drawings, piping and instrumentation (PI) diagrams, and circuit diagrams.

Layout drawing	PI diagram	Circuit diagram	Description
1	-	-	Outlet to internal cooling circuit
2	-	-	Inlet from internal cooling circuit
3	-	-	Inlet from external cooling circuit
4	-	-	Outlet to external cooling circuit
5	-	-	Pump de-airing screw
GA-201	GA-201	-M201	Coolant pump 1
EA-100	EA-100	-	Heat exchanger
PA-102	PA-102	-	Expansion vessel
VA-103	VA-103	-	Automatic float air vent
PT-201	PT-201	-T201	Inlet pressure transmitter with low limit alarm
PT-202	PT-202	-T202	Outlet pressure transmitter
PI-203	PI-203	-	Coolant pressure gauge
-	TIA(C)-210	-	Coolant temperature indicator and alarm (and control with option +C242). This device is the LCU control unit.
TT-201	TT-201	-B201	Coolant temperature transmitter
TT-202	TT-202	-B202	Ambient temperature transmitter
TT-210	TT-210	(-A210)	Cabinet temperature transmitter
TT-211	TT-211	-B211	Coolant temperature transmitter if 2-way valve is installed (option +C242)
V0001	V0001	-	Shut-off valve for automatic float air vent
V0002	V0002	-	Pressure transmitter (PT-201) shut-off valve
V0008	V0008	-	Pressure transmitter (PT-202) shut-off valve
V0009	V0009	-	Pressure gauge (PI-203) shut-off valve
V0003	V0003	-	Expansion vessel shut-off valve
V0004, V0006	V0004, V0006	-	Pump shut-off valves
V0010	V0010	-	Drain/fill valve (internal circuit LCU inlet)
V0011	V0011	-	Expansion vessel bleed valve
V0012	V0012	-	Drain valve (internal circuit LCU outlet)
V0014	V0014	-	Fill valve (internal circuit LCU outlet)
V0013	V0013	-	Safety relief valve for UL (option +C129)
V0016	V0016	-	Control valve
V0018	V0018	-	Control valve if 2-way valve is installed (option +C242)
V0019	V0019	-	Shut off valve for the Safety relief valve (with option +C129 only)
-	SA-104	-	Strainer (with option +C242 only)
LA-201	LA-201	S201	Leakage detector
-	LA-211	S211	Leakage detector

Layout drawing – ACS880-1007LC-0195 in cabinet line-up

The two illustrations that follow show the interior of the cooling unit. In this example, the cooling unit is attached to the right end of the drive cabinet line-up, and the user connects the external cooling circuit to the right side of the unit.

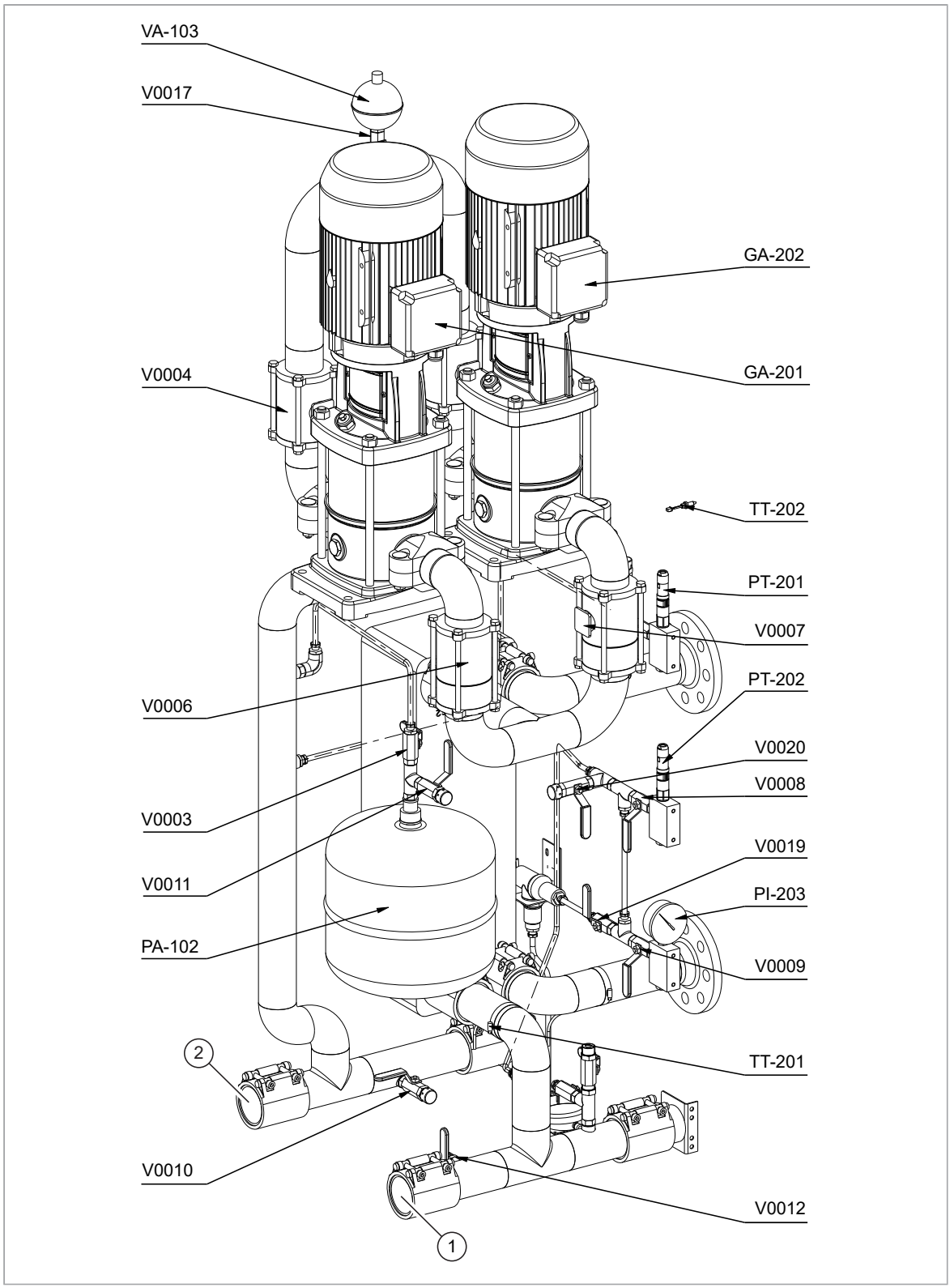

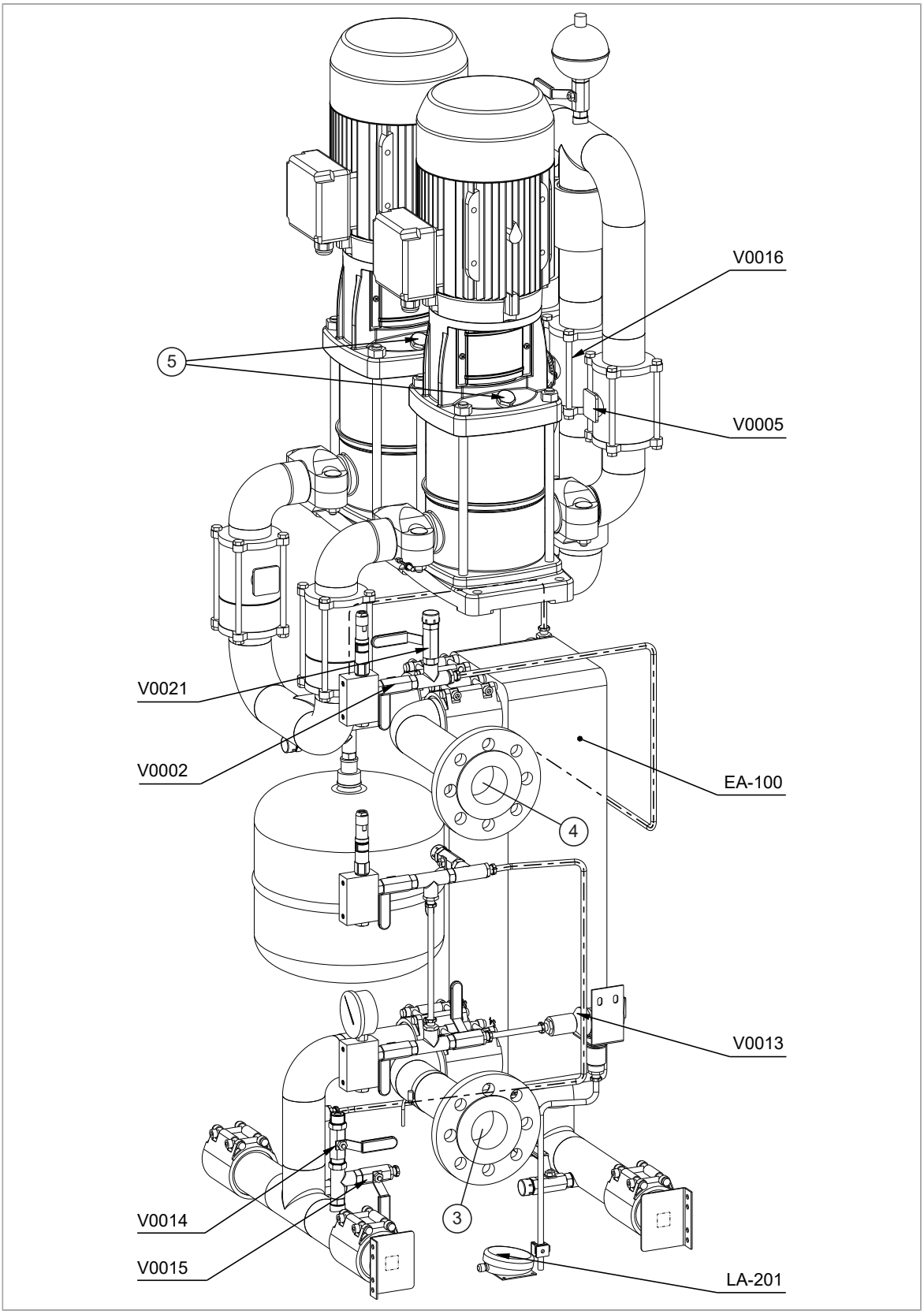
V0016
5
V0005
V0021
V0002
EA-100
4
V0013
V0014
3
V0015
LA-201

ACS880-1007LC-0195 component designations

The table below lists the component designations used in layout drawings, piping and instrumentation (PI) diagrams, and circuit diagrams.

Layout drawing	PI diagram	Circuit diagram	Description
1	-	-	Outlet to internal cooling circuit
2	-	-	Inlet from internal cooling circuit
3	-	-	Inlet from external cooling circuit
4	-	-	Outlet to external cooling circuit
5	-	-	Pump de-airing screw
EA-100	EA-100	-	Heat exchanger
GA-201	GA-201	-M201	Coolant pump 1
GA-202	GA-202	-M202	Coolant pump 2
LA-201	LA-201	S201	Leakage detector
-	LA-211	S211	Leakage detector
PA-102	PA-102	-	Expansion vessel
PT-201	PT-201	-T201	Inlet pressure transmitter with low limit alarm
PT-202	PT-202	-T202	Outlet pressure transmitter
PI-203	PI-203	-	Coolant pressure gauge
-	TIA(C)-210	-	Coolant temperature indicator and alarm (and control with option +C242)
TT-201	TT-201	-B201	Coolant temperature transmitter
TT-202	TT-202	-B202	Ambient temperature transmitter
TT-210	TT-210	(-A210)	Cabinet temperature transmitter
TT-211	TT-211	-B211	Coolant temperature transmitter in 2-way control valve cubicle (with option +C242 only)
VA-103	VA-103	-	Automatic float air vent
V0001	V0001	-	Shut-off valve for automatic float air vent
V0002	V0002	-	Pressure transmitter (PT-201) shut-off valve
V0003	V0003	-	Expansion vessel shut-off valve
V0004 … V0007	V0004 … V0007	-	Pump shut-off/check valves
V0008	V0008	-	Pressure transmitter (PT-202) shut-off valve
V0009	V0009	-	Pressure gauge (PI-203) shut-off valve
V0010	V0010	-	Drain/fill valve (internal circuit LCU inlet)
V0011	V0011	-	Expansion vessel bleed valve
V0012	V0012	-	Drain/fill valve (internal circuit LCU outlet)
V0013	V0013	-	Safety relief valve for UL (option +C129)
V0014	V0014	-	Fill valve (internal circuit LCU outlet)
V0015	V0015	-	Shut off valve for extra LCU cubicle cooler (with option +C213 only)
V0016	V0016	-	Control valve
V0017	V0017	-	Shut off valve for extra LCU cubicle cooler (with option +C213 only)
V0018	V0018	-	Control valve (option +C242)
-	SA-104	-	Strainer (with option +C242 only)

Layout drawing	PI diagram	Circuit diagram	Description
V0019	V0019	-	Shut off valve for the safety relief valve (with option +C129 only)
V0020 … V0021	V0020 … V0021	-	Drain valves for ABB internal testing use in production

Layout drawing – ACS880-1007LC-0195 stand-alone (option +C139)

The illustration that follows shows a stand-alone cooling unit. In this example, the user connects the internal and external cooling circuits to the right side of the unit.

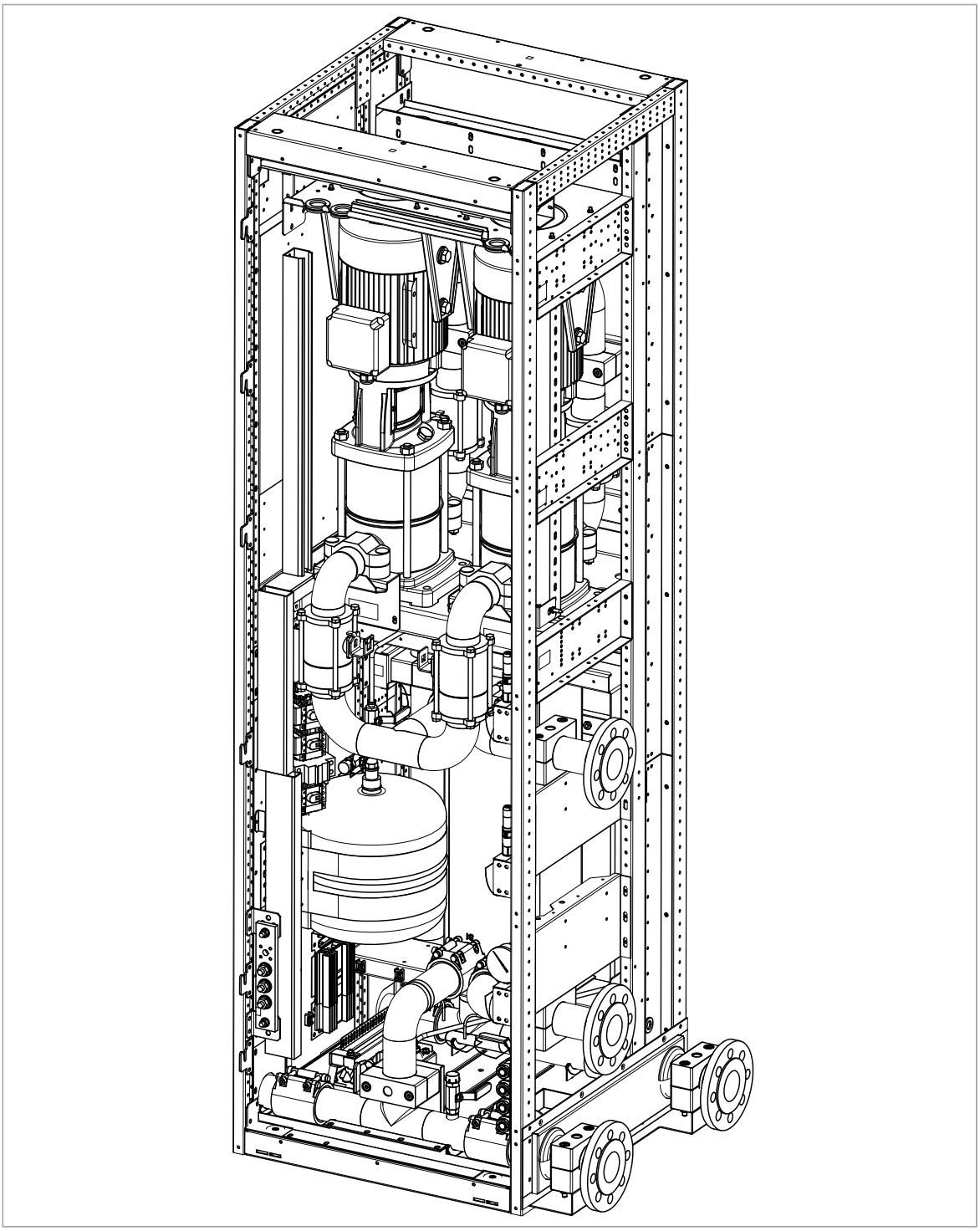

Layout drawing – 2-way control valve cubicle (option +C242) for ACS880-1007LC-0070

The illustration that follows shows the control valve cubicle for ACS880-1007LC-0070 in cabinet line-up. The cooling cubicle is on the left (not shown in the illustration), and the external cooling circuit connection is on the right.

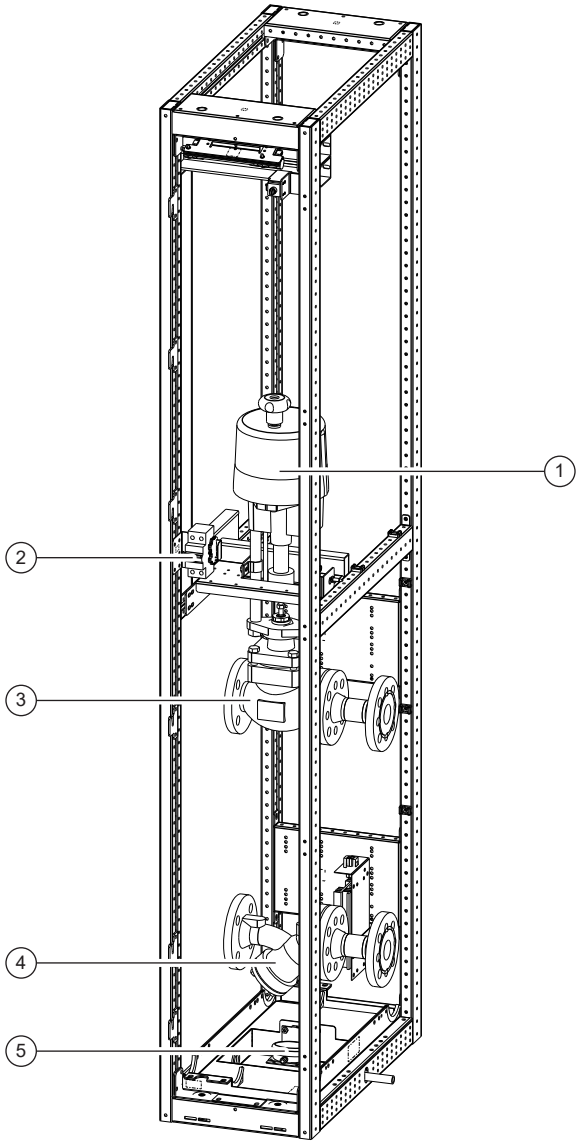

1	Actuator for control valve
2	Circuit breaker for actuator
3	Control valve
4	Strainer
5	Leakage detector

Layout drawing – 2-way control valve cubicle (option +C242) for ACS880-1007LC-0195

The illustration that follows shows the control valve cubicle for ACS880-1007LC-0195 in cabinet line-up. The cooling unit cubicle is on the left (not shown in the illustration), and the external cooling circuit connection is on the right.

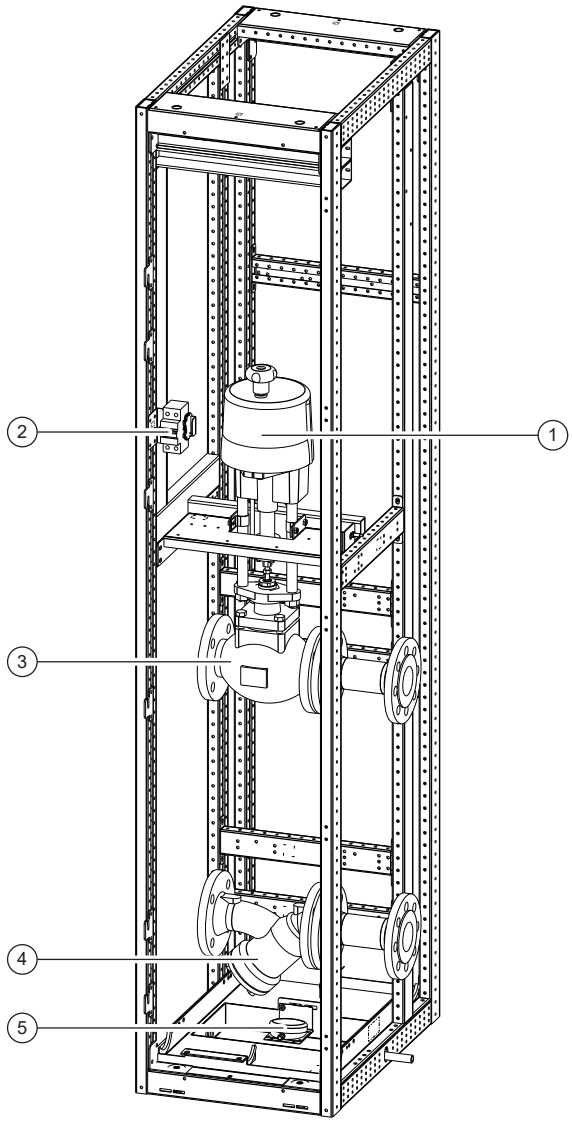

1	Actuator for control valve
2	Circuit breaker for actuator
3	Control valve
4	Strainer
5	Leakage detector

Swing-out frame for electrical devices in ACS880-1007LC-0070

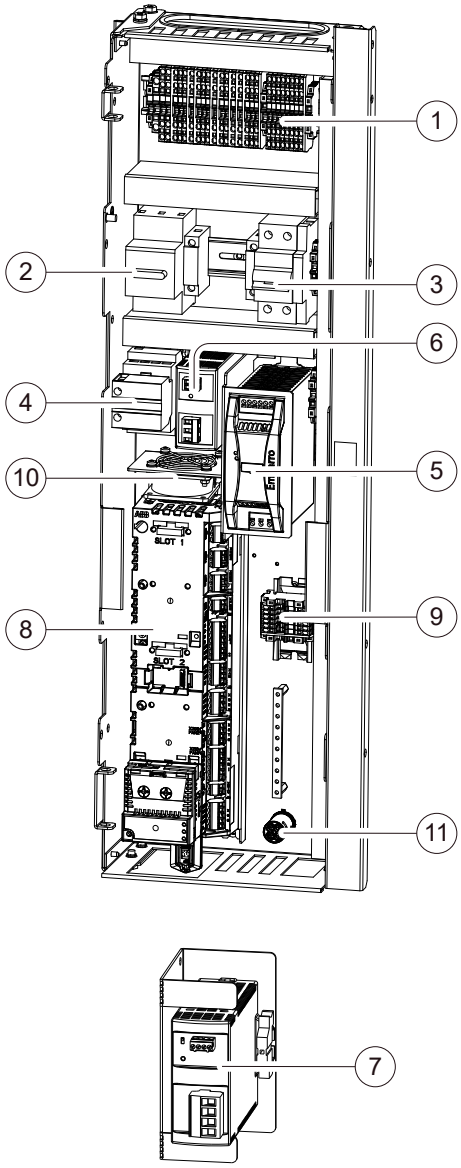

1	Terminal block [X201]
2	Motor protective circuit breaker for pump [F201]
3	Circuit breaker for control voltage [F210]
4	Main contactor for pump [Q201]
5	24 V DC power supply (for control unit) [T210]
6	Power supply for lighting [T130]
7	Buffer unit [C210]
8	ZCU control unit [A210]
9	Terminal block [X211]
10	Cooling fan [G210]
11	Manual pump control switch [S210]

Swing-out frame for electrical devices in ACS880-1007LC-0195

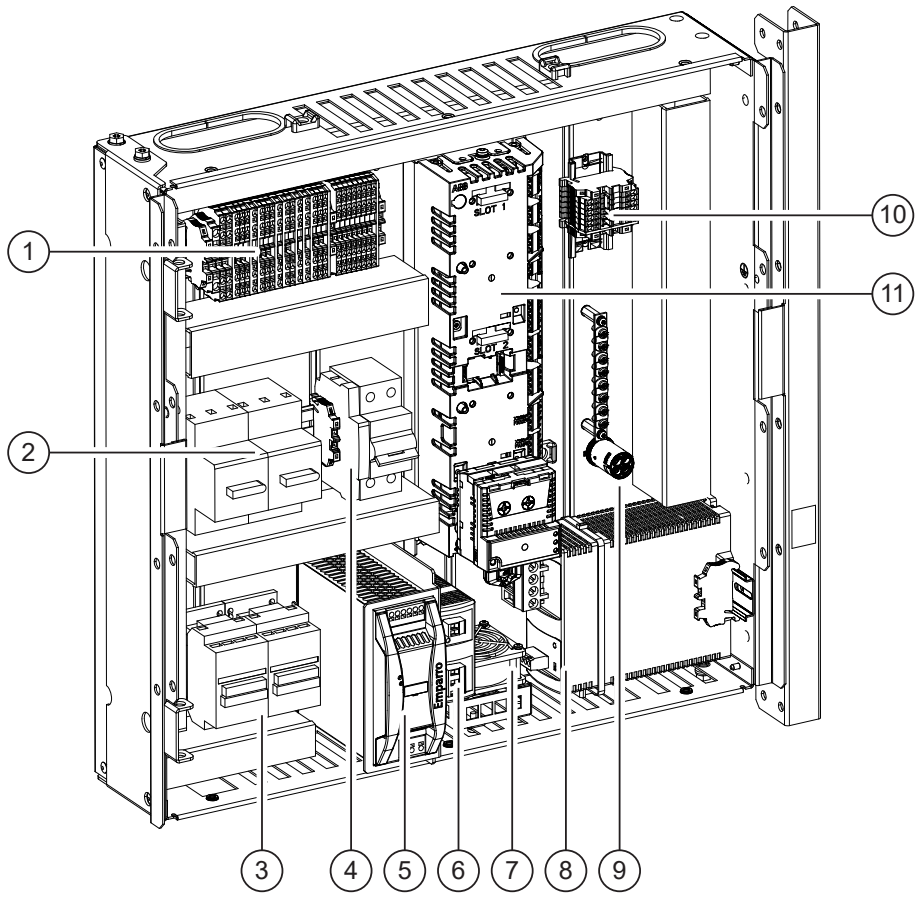

1	Terminal block [X201]
2	Motor protective circuit breakers for pumps [F201, F202]
3	Main contactors for pumps [Q201, Q202]
4	Circuit breakers for control voltage [F210]
5	24 V DC power supply (for control unit) [T210]
6	Power supply for lighting [T130]
7	Cooling fan [G210]
8	Buffer unit [C210]
9	Manual pump control switch [S210]
10	Terminal block [X211]
11	ZCU control unit [A210]

Control interfaces

General

The control program runs on the ZCU-14 control unit. The IO interface of the control unit is:

- the standard interface for the internal control and status signals (pump status, pressure monitoring, pump on/off, etc.)
- the default interface for the external control signals (start, reset, fault indication).

The user cannot change the interface for the internal signals. For the external signals, the user can also use these signal interfaces in addition to, or as an alternative to the IO interface:

- a control panel (optional), or a PC with the Drive Composer PC tool (optional)
- a fieldbus adapter module (optional)
- A DDCS communication adapter (optional).

When the cooling unit is part of an ABB drive cabinet line-up, the external control signals are connected to the drive supply unit as standard. The supply unit sends the start/stop and reset signals to the cooling unit. ABB does the wiring and sets the parameter settings at the factory.

If necessary, the user can change the external control interface with the control panel and parameter 20.03:

- When the control panel is in the local control mode, the control panel is the control interface.
- When the control panel is in the remote control mode, parameter 20.03 defines the control interface.

The user can switch between local and remote control modes with the **Loc/Rem** key of the control panel.

For commissioning and service, there is an additional manual pump control switch [S210] installed in the unit. For more information, refer to Manual pump control (page 29).

Control panel

If the cooling unit is stand-alone or part of a multidrives cabinet line-up, it usually has a dedicated control panel. If the cooling unit is part of a single drive cabinet line-up, there is no dedicated control panel for the cooling unit, but the drive control panel can communicate with the cooling unit.

IO interface of the control unit

This table shows the signals of the control unit IO interface.

IO	Designation	Description	Signal interface [1)]
DI1	XDI.1	Status of the pump 1 motor protective circuit breaker (1 = ON)	Internal
DI2	XDI.2	Status of the pump 2 motor protective circuit breaker (1 = ON). Not in use in one-pump cooling unit.	Internal
DI3	XDI.3	Leakage detector (1 = LEAKAGE)	Internal
DI4	XDI.4	Reset (1 = RESET)	External
DI5	XDI.5	Not in use	Internal
DI6	XDI.6	Start signal (1 = START)	External
DIO1	XDIO.1	Not in use	Internal
DIO2	XDIO.1	Not in use	Internal
DIIL	XD24.1	Not in use	Internal
RO1	XRO1	Pump 1 control (1 = RUN)	Internal
RO2	XRO2	Pump 2 control (1 = RUN). Not in use in one-pump cooling unit.	Internal
RO3	XRO3	Fault indication (0 = Fault)	External

IO	Designation	Description	Signal interface [1]
AI1	XAI.4-5	Inlet pressure sensor	Internal
AI2	XAI.6-7	Outlet pressure sensor	Internal
AO1	XAO.1-2	2-way control valve control (option +C242)	Internal
AO2	XAO.3-4	Not in use	Internal
	X209	Ambient temperature sensor	Internal

[1] User wiring to internal interfaces is not possible.

IO interface of the FAIO-01 analog interface module

This table shows the signals of the FAIO-01 analog interface module. The module is attached on the control unit as standard.

IO	Designation	Description
AI1	XA1	Internal circuit coolant temperature measurement from the sensor
AI2	XAI2	External circuit coolant temperature measurement from the sensor (option +C242)
AO1	XAO1	Supply for internal circuit coolant temperature measurement
AO2	XAO2	Supply for external circuit coolant temperature measurement (option +C242)

Use of the control unit expansion slots

The control unit has three expansion slots. This table shows the use of the slots.

Slot	Description
Slot 1	FAIO-01 analog interface module (standard). Interface for the coolant temperature monitoring.
Slot 2	FENA-21 Ethernet adapter module (optional), or I/O extension module (optional).
Slot 3	Fieldbus adapter module (optional), I/O extension module (optional) or FDCO-01 DDCS adapter module and FDPI-02 for panel bus adapter (optional)

PC connection

There is a USB connector on the control panel that you can use for connecting a PC to the cooling unit. When a PC is connected to the cooling unit through the control panel, the control panel keypad is disabled.

If the cooling unit has a FENA-21 Ethernet adapter module (option +K475) installed, you can use it to connect a PC to the unit. Connect the PC to the Ethernet module with an Ethernet cable and use the Drive Composer PC tool.

Manual pump control

WARNING!
Fill and bleed the cooling system before you start the coolant pump(s). If the pump operates dry, or there is air in the system, damage to the pump seals can occur.

Manual pump control switch [S210] can be used to operate the pump(s) momentarily during commissioning and service work. To access and use the switch, the cabinet door and swing-out frame must be open.

The switch is used in these commissioning and service procedures (if necessary):

- Checking the direction of rotation of the pump motor
- Bleeding the cooling system. Refer to Bleeding the cooling system (page 58).
- Sealing a coolant leakage during the filling of the cooling system. Refer to Filling up the cooling circuit and starting the cooling unit (page 51).

Type designation label

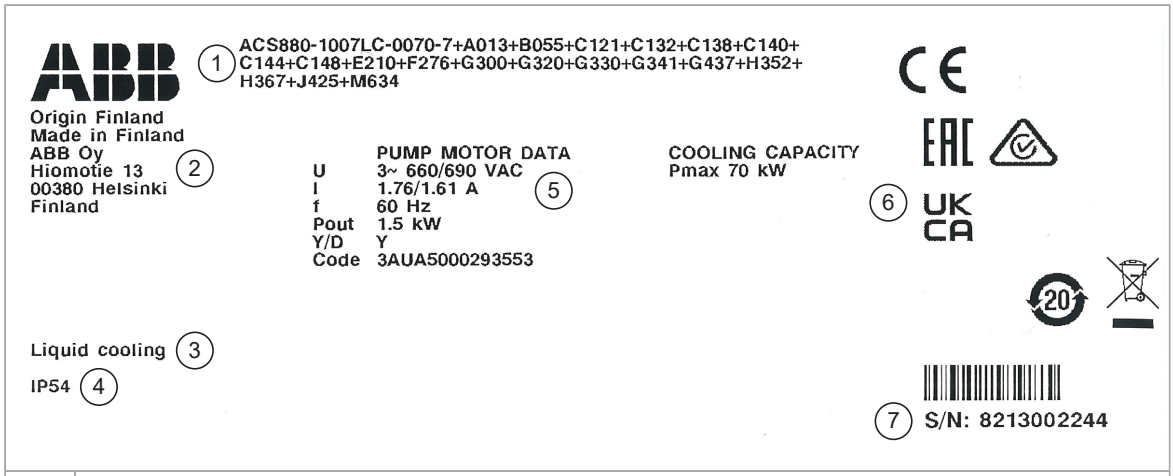

1	Type designation. See section Type designation key.
2	Manufacturer information
3	Cooling method
4	Degree of protection
5	Ratings. See section Pump and pump motor (page 150) and Nominal cooling power, losses and pressure drop (page 149).
6	Valid markings. See Electrical planning instructions for ACS880 multidrives cabinets and modules (3AUA0000102324 [English]).
7	Serial number. The first digit of the serial number refers to the manufacturing plant. The next four digits refer to the manufacturing year and week, respectively. The remaining digits complete the serial number so that there are no two units with the same number.

Type designation key

The type designation (code) is printed on the type designation label of the cooling unit. It describes the composition of the unit in short. The complete designation is divided in sub-codes:

- The first digits form the basic code. It describes the basic construction of the unit. The fields in the basic code are separated by hyphens.
- The option codes (plus codes) come after the basic code. Each option code starts with an identifying letter (common for the whole product series), followed by descriptive digits. The plus codes are separated by plus signs.

Basic code

The table below describes the fields of the basic code. ACS880-1007LC-0070-7 is used as an example.

Fields	Description
ACS880	Product series. ACS880: Industrial drives.
1007LC	Unit identifier. 1007LC: Cooling unit. Standard features (unless configured differently with option codes): 50 Hz power supply, IP42 (UL Type 1), pipe connections on right, industrial water in external cooling circuit, 230 V AC control voltage, door hinges on right, bottom cable entry, standard cable entry plate, manuals on USB stick, coolant Antifrogen® L 25%.
0070	Unit size. 0070: 70 kW, 0195: 195 kW.
7	Voltage rating of the drive line-up. 3: 400 V, 5: 500 V, 7: 690 V. This rating does not have an effect on the pump supply voltage or the auxiliary voltages.

Option codes

Code	Description
A012	50 Hz supply frequency
A013	60 Hz supply frequency
B054	IP42 (UL Type 1 Filtered)
B055	IP54 (UL Type 12)
C121	Marine construction
C129	UL Listed (evaluated to both U.S. and Canadian safety requirements)
C132	Marine type approval. Refer to ACS880 +C132 marine type-approved cabinet-built drives supplement (3AXD50000039629 [English]).
C134	CSA approved
C138	ACS880-1007LC cooling unit as part of line-up
C139	ACS880-1007LC cooling unit separate from line-up (stand-alone)
C140	Single-pump cooling unit
C141	Redundant (twin-pump) cooling unit
C142	Pipe connection through bottom
C143	Pipe connection on right
C144	Pipe connection on left
C145	ANSI flange pipe connection
C146	External cooling circuit suitable for sea water
C148	Internal cooling circuit pipe connection on the right
C149	Internal cooling circuit pipe connection on the left
C164	Plinth height 100 mm
C176	Door hinges on left
C179	Plinth height 200 mm
C205	Marine product certification issued by DNV GL
C206	Marine product certification issued by the American Bureau of Shipping (ABS)
C207	Marine product certification issued by Lloyd's Register (LR)
C209	Marine product certification issued by Bureau Veritas
C213	Cooling unit pumps can run simultaneously

Code	Description
C228	Marine product certification issued by China Classification Society (CCS)
C229	Marine product certification issued by Russian Maritime Register of Shipping (RS)
C242	2-way valve in a dedicated cubicle
E210	EMC/RFI filter for 2nd environment TN (grounded) or IT (ungrounded) system, category C3
G300	Cabinet and module heating elements (external supply)
G301	Cabinet lighting
G304	Control (auxiliary) voltage 115 V AC
G307	Terminals for connecting external control voltage (230 V AC or 115 V AC, eg. UPS)
G320	Control (auxiliary) voltage 230 V AC
G330	Halogen-free wiring and materials
G338	Wire marking class A1
G339	Wire marking class A2
G340	Wire marking class A3
G341	Wire marking class B1
G342	Wire marking class C1
G434	380 … 415 V / 50 Hz supply voltage for pump motor(s)
G436	660 … 690 V / 50 Hz supply voltage for pump motor(s)
G437	660 … 690 V / 60 Hz supply voltage for pump motor(s)
G454	380 … 400 V / 60 Hz supply voltage for pump motor(s)
G455	440 … 480 V / 60 Hz supply voltage for pump motor(s)
G456	460 V / 60 Hz supply voltage for pump motor(s), with option +C129 or +C134
G457	575 V / 60 Hz supply voltage for pump motor(s), with option +C129 or +C134
H350	Power cabling entry from bottom
H351	Power cabling entry from top
H358	Cable gland plates (3 mm steel, undrilled)
H364	Cable gland plates (3 mm aluminum, undrilled)
H365	Cable gland plates (6 mm brass, undrilled)
H367	Control cabling through floor of cabinet
H368	Control cabling through roof of cabinet
J400	ACS-AP-W control panel (with Bluetooth)
J410	Control panel mounting platform
J425	ACS-AP-I control panel (without Bluetooth)
K450	Panel bus (control of several units from one control panel)
K451	FDNA-01 DeviceNet™ adapter module
K454	FPBA-01 PROFIBUS DP adapter module
K457	FCAN-01 CANopen adapter module
K458	FSCA-01 RS-485 (Modbus/RTU) adapter module
K462	FCNA-01 ControlNet™ adapter module
K469	FECA-01 EtherCAT adapter module
K470	FEPL-02 Ethernet POWERLINK adapter module
K475	FENA-21 Ethernet adapter module for EtherNet/IP™, Modbus TCP and PROFINET IO protocols, 2-port

Code	Description
K480	Ethernet switch for PC tool or control network (for max. 6 inverter units)
K483	Ethernet switch with optical link for PC tool or control network (for max. 6 inverter units)
K490	FEIP-21 Ethernet adapter module for EtherNet/IP™
K491	FMBT-21 Ethernet adapter module for Modbus TCP
K492	FPNO-21 Ethernet adapter module for PROFINET IO
K493	Ethernet switch for PROFINET
K494	Ethernet switch with optical link for PROFINET
L503	FDCO-01 optical DDCS communication adapter module
L508	FDCO-02 optical DDCS communication adapter module
M633	Pump motor in delta connection
M634	Pump motor in star connection
P904	Extended warranty (30 months from delivery or 24 months from commissioning)
P909	Extended warranty (42 months from delivery or 36 months from commissioning)
P912	Seaworthy packaging
P913	Special color (RAL Classic)
P948	Customized extended warranty
P963	Documentation for PED compliance
P966	Special color (other than RAL Classic)

3

Mechanical installation

Contents of this chapter

This chapter describes the mechanical installation procedure of the cooling unit.

Designing the internal cooling circuit

This section is applicable to stand-alone cooling units (option +C139).

You must design and assemble the internal cooling circuit piping between the drive line-up and the cooling unit. When you design the piping between the stand-alone cooling unit and the drive line-up, obey the specifications given by ABB for each cooling unit delivery. Refer to the delivery-specific technical documentation. Use only the materials specified in section Cooling circuit materials (page 147).

Installing the cooling unit

Install the cooling unit mechanically as follows:

1. Attach the unit to the floor. In a marine installation (or other installations where the unit will be subjected to vibration), attach the unit also from above. Obey the instructions in the applicable manual:
   - for single drives, refer to the drive hardware manual
   - for multidrives, refer to ACS880 liquid-cooled multidrives cabinets mechanical installation instructions (3AXD50000048635 [English]).
2. Connect a hose to the bottom drain pipe of the cooling unit. Put the other end of the hose into a sewer.
3. Remove the protective plates from the pipe flanges.

4. Stand-alone cooling unit (option +C139): Connect the drive internal cooling circuit to the cooling unit. Use only the fastener types specified in section Pipe flanges (page 156). Secure the pipes mechanically.
5. Connect the external cooling circuit to the cooling unit. Use only the fastener types specified in section Pipe flanges (page 156). Secure the pipes mechanically.

4

Electrical installation

Contents of this chapter

This chapter describes the electrical installation of the liquid cooling unit.

Electrical safety precautions

These electrical safety precautions are for all personnel who do work on the drive, motor cable or motor.

WARNING!
Obey these instructions. If you ignore them, injury or death, or damage to the equipment can occur.

If you are not a qualified electrical professional, do not do installation or maintenance work.

Do these steps before you begin any installation or maintenance work.

1. Clearly identify the work location and equipment.
2. Disconnect all possible voltage sources. Make sure that re-connection is not possible. Lock out and tag out.
   - Open the main disconnecting device of the drive.
   - Open the charging switch if present.
   - Open the disconnector of the supply transformer. (The main disconnecting device in the drive cabinet does not disconnect the voltage from the AC input power busbars of the drive cabinet.)
   - If the drive is equipped with a DC/DC converter unit (optional) or a DC feeder unit (optional): Open the DC switch-disconnector ([Q11], option +F286 or +F290) of the unit. Open the disconnecting device of the energy storage connected to the unit (outside the drive cabinet).

- Open the auxiliary voltage switch-disconnector (if present), and all other possible disconnecting devices that isolate the drive from dangerous voltage sources.
- In the liquid cooling unit (if present), open the switch-disconnector of the cooling pumps.
- If you have a permanent magnet motor connected to the drive, disconnect the motor from the drive with a safety switch or by other means.
- Disconnect all dangerous external voltages from the control circuits.
- After you disconnect power from the drive, always wait 5 minutes to let the intermediate circuit capacitors discharge before you continue.

3. Protect any other energized parts in the work location against contact.
4. Take special precautions when close to bare conductors.
5. Measure that the installation is de-energized. Use a quality voltage tester. If the measurement requires removal or disassembly of shrouding or other cabinet structures, obey the local laws and regulations applicable to live working (including – but not limited to – electric shock and arc protection).
   - Before and after measuring the installation, verify the operation of the voltage tester on a known voltage source.
   - Make sure that the voltage between the drive input power terminals (L1, L2, L3) and the grounding (PE) busbar is zero.
   - Make sure that the voltage between the drive output terminals (T1/U, T2/V, T3/W) and the grounding (PE) busbar is zero.

     Important! Repeat the measurement also with the DC voltage setting of the tester. Measure between each phase and ground. There is a risk of dangerous DC voltage charging due to leakage capacitances of the motor circuit. This voltage can remain charged for a long time after the drive power-off. The measurement discharges the voltage.
   - Make sure that the voltage between the drive DC terminals (UDC+ and UDC-) and the grounding (PE) terminal is zero. In cabinet-built drives, measure between the drive DC busbars (+ and -) and the grounding (PE) busbar.

WARNING!
The busbars inside the cabinet of liquid-cooled drives are partially coated. Measurements made through the coating are potentially unreliable, so only measure at uncoated portions. Note that the coating does not constitute a safe or touch-proof insulation.

6. Install temporary grounding as required by the local regulations.
7. Ask for a permit to work from the person in control of the electrical installation work.

Connecting the power cables

Connect the pump motor(s) to a user-defined power supply on site. For the pump motor supply voltage, refer to the type designation label and the circuit diagrams delivered with the drive.

Stand-alone cooling unit (option +C139): Also connect these user-defined power supplies on site:

- one-phase auxiliary power supply for the control circuit
- one-phase auxiliary power supply for the cabinet heater (option +G300), and/or lighting (option +G301).

For the power supply specifications, refer to the technical data and the circuit diagrams delivered with the drive.

Connection diagram (cooling unit in drive cabinet line-up)

This connection diagram is applicable to cooling units that are part of the drive line-up (option +C138).

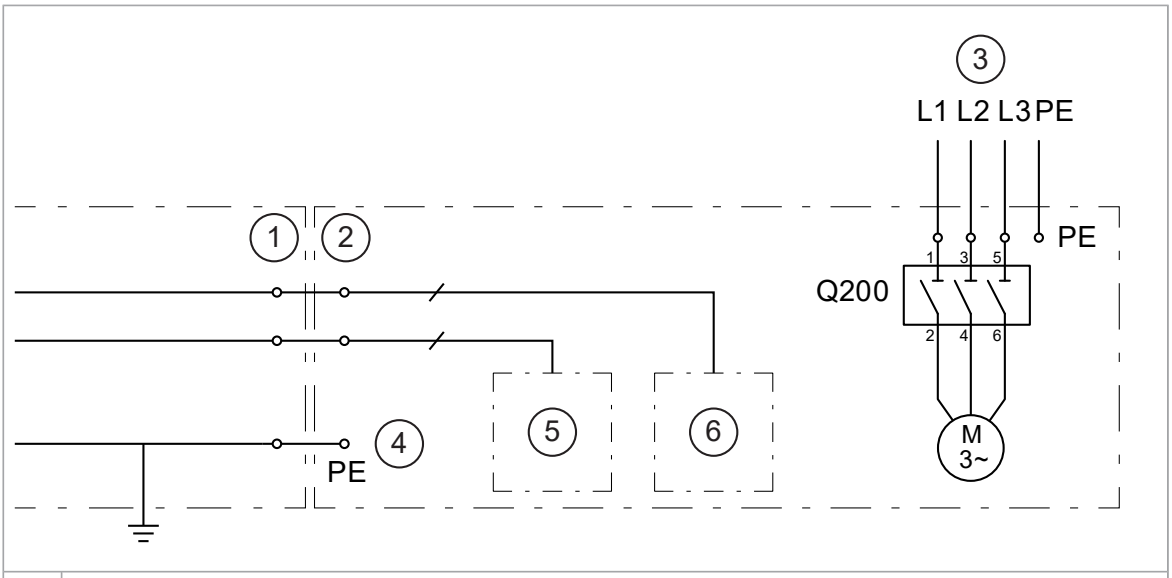

1	Drive
2	ACS880-1007LC liquid cooling unit
3	3-phase power supply for the pump motor(s)
4	Connection to drive cabinet PE (ground) busbar (mandatory)
5	Control circuit. Refer to the circuit diagrams delivered with the drive.
6	Cabinet heating (option +G300), and/or lighting (option +G301). Refer to the circuit diagrams delivered with the drive.

Connection diagram (stand-alone cooling unit)

This connection diagram is applicable to stand-alone cooling units (option +C139).

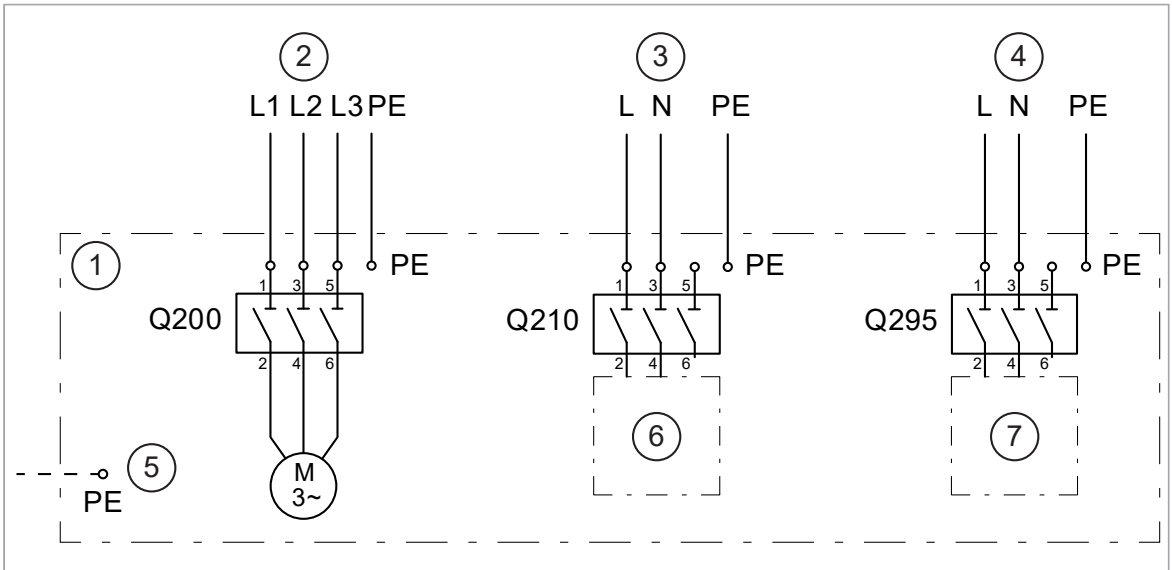

1	ACS880-1007LC liquid cooling unit
2	3-phase power supply for the pump motor(s)
3	1-phase auxiliary power supply for the control circuit
4	1-phase auxiliary power supply for the cabinet heater (option +G300), and/or lighting (option +G301)
5	Connection to drive cabinet PE (ground) busbar (optional) **Note:** If possible, you can connect the cooling unit PE cable to the drive cabinet PE busbar. But the connection is not mandatory.
6	Control circuit. Refer to the circuit diagrams delivered with the drive.
7	Cabinet heating (option +G300), and/or lighting (option +G301). Refer to the circuit diagrams delivered with the drive.

Grounding

Select the protective earth conductors according to applicable local and national regulations.

Cooling unit in drive cabinet line-up (option +C138): Make sure that the cooling unit PE (ground) cable is connected to the drive cabinet PE (ground) busbar.

Stand-alone cooling unit (option +C139): Ground the cooling unit according to applicable local and national regulations.

Connection procedure

WARNING!
Obey the safety instructions of the drive. If you ignore them, injury or death, or damage to the equipment can occur. If you are not a qualified electrical professional, do not do installation, commissioning or maintenance work.

This section shows the cable entry through the bottom of the cooling unit.

Connect the power cables as follows:

1. Do the steps in section Electrical safety precautions (page 37) before you start the work.
2. Open the door of the cooling unit.
3. Locate the cable entry. Loosen the tightening screws of the cable entry cushions and pull the cushions apart. If necessary, remove the screws and cushions.

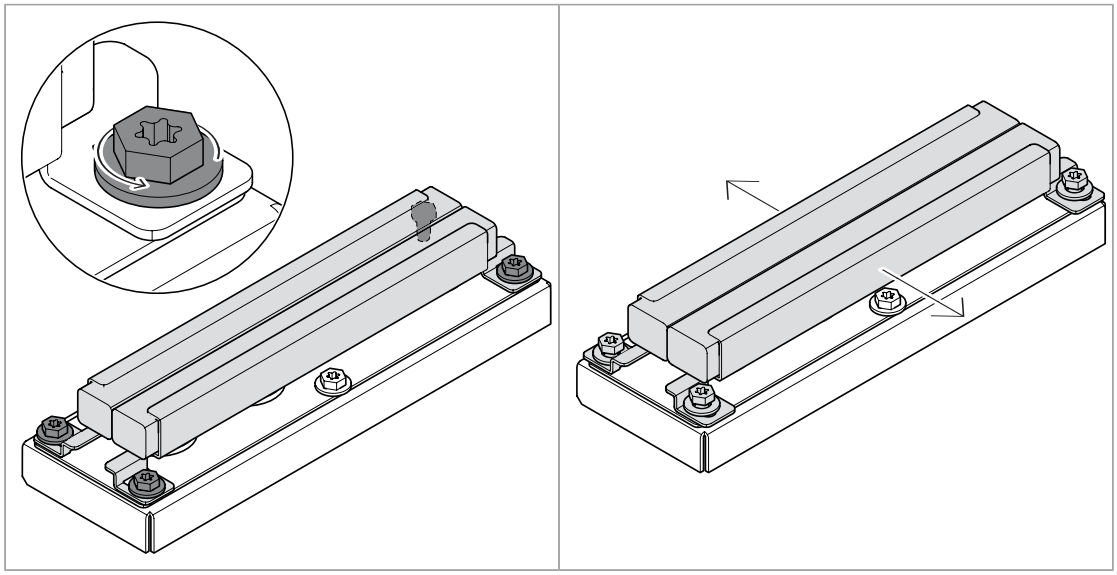

4. Pull the cable through a grommet (below the cushions) and the cable entry cushions inside the cabinet.

5. Put the cable between the cushions.
6. Push the cushions back together. Tighten the screws to make sure that the cushions press tightly around the cable.

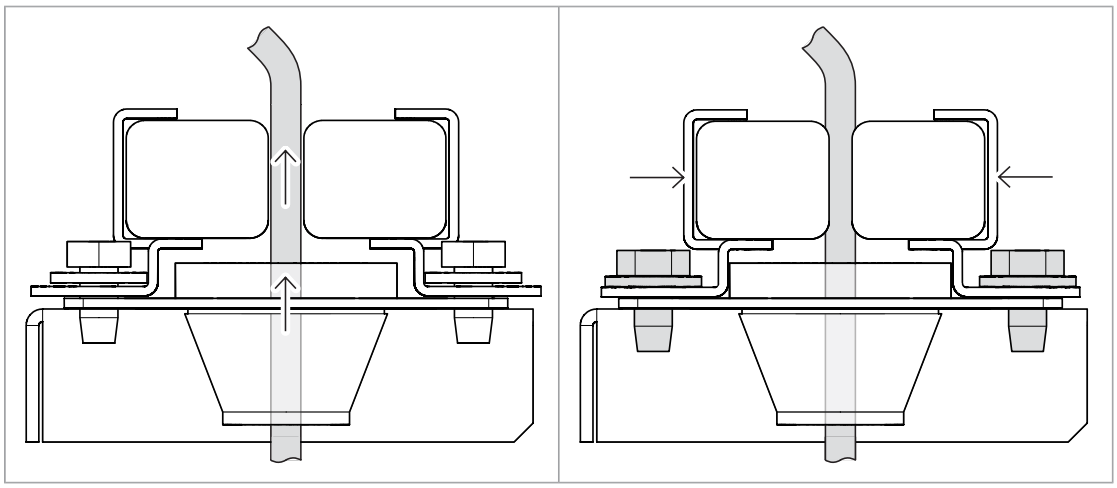

7. Route the cable to the switch-disconnector. Use the existing trunking.
8. Strip the end of the cable and its conductors, and connect it to the switch-disconnector. Refer to the circuit diagrams delivered with the drive.

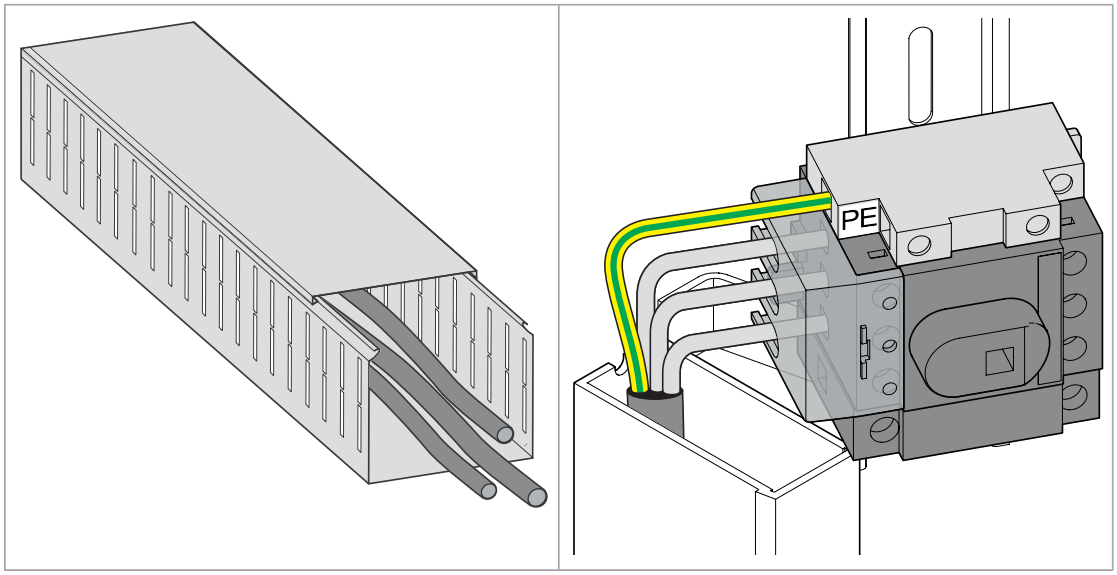

Connecting the control cables

Cooling unit in drive cabinet line-up (option +C138): As standard, the supply unit of the drive controls the cooling unit. If the drive cabinet line-up is delivered as one transport unit, no user connections are necessary. If the drive cabinet line-up was delivered in multiple transport units, you must connect the internal control cables at the installation site. Refer to the circuit diagrams delivered with the drive.

Stand-alone cooling unit (option +C139): Connect the external control cables. Refer to the circuit diagrams delivered with the drive.

Guidelines for connecting the control cables

Connect the conductors to the appropriate terminals. Refer to the wiring diagrams delivered with the drive.

Obey these instructions:

- Connect the inner twisted pair shields and all separate grounding wires to the grounding clamps near the terminals.
- Ground the outer shield of the cable at the cable entry, not at the grounding clamps near the terminals.
- Keep any signal wire pairs twisted as close to the terminals as possible. Twisting the wire with its return wire reduces disturbances caused by inductive coupling.
- At the other end of the cable, leave the shields unconnected or ground them indirectly via a high-frequency capacitor with a few nanofarads, eg. 3.3 nF / 630 V. The shield can also be grounded directly at both ends if they are in the same ground line with no significant voltage drop between the end points.

The drawing below represents the grounding of the control cabling when connecting to a terminal block inside the cabinet. The grounding is done in the same way when connecting directly to a component such as the control unit.

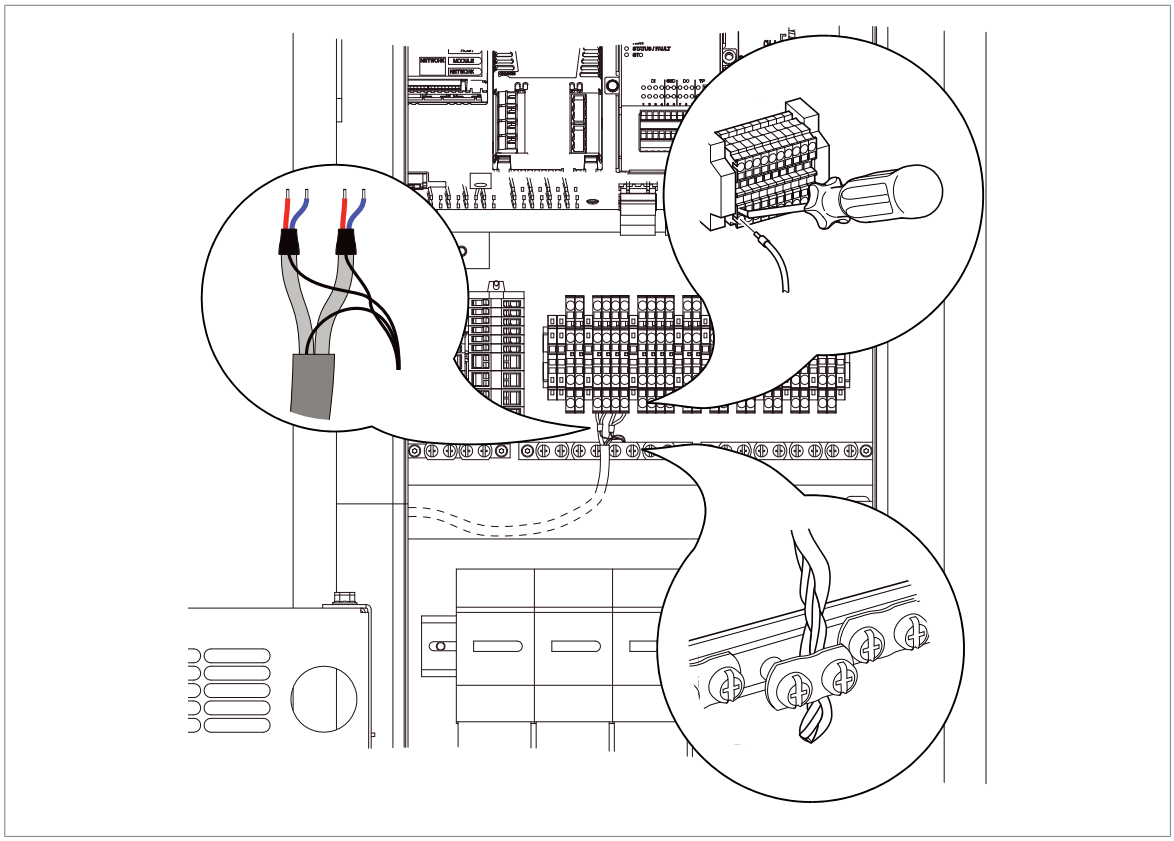

Control cable connection procedure

WARNING!
Obey the safety instructions of the drive. If you ignore them, injury or death, or damage to the equipment can occur. If you are not a qualified electrical professional, do not do installation, commissioning or maintenance work.

This section shows the cable entry through the bottom of the cooling unit.

Connect the control cables as follows:

1. Do the steps in section Electrical safety precautions (page 37) before you start the work.
2. Open the door of the cooling unit.
3. Locate the cable entry. Loosen the tightening screws of the cable entry cushions and pull the cushions apart. If necessary, remove the screws and cushions.

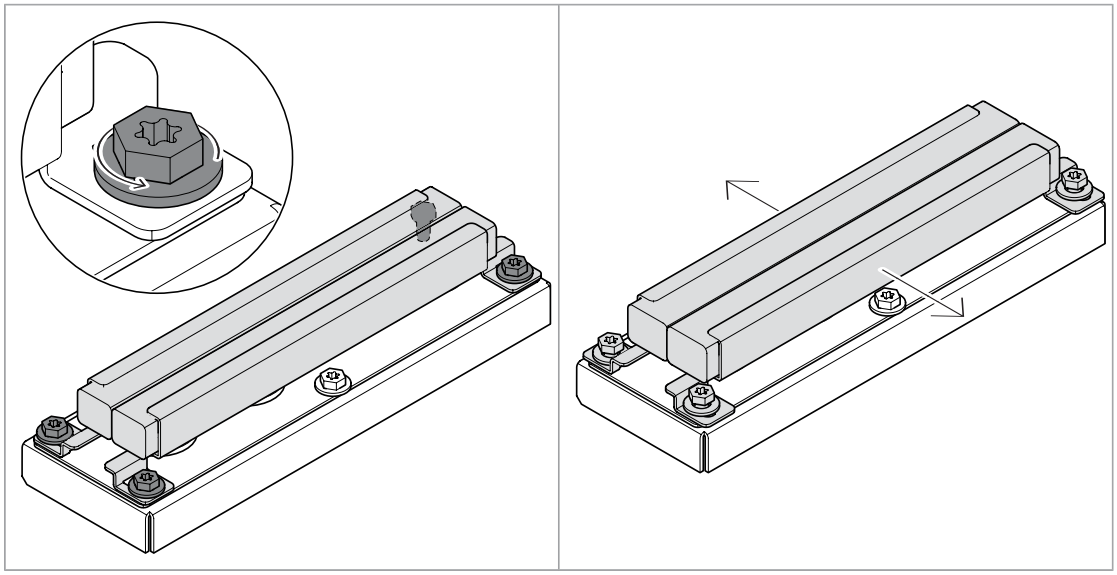

4. Pull the cable through a grommet (below the cushions) and the cable entry cushions inside the cabinet.
5. Peel the insulation from the part of the cable that will be in contact with the cable entry cushions. The conductive cushions ground the shield 360 degrees.

6. Put the peeled part of the cable between the cushions.
7. Push the cushions back together. Tighten the screws to make sure that the cushions press tightly around the bare shield of the cable.

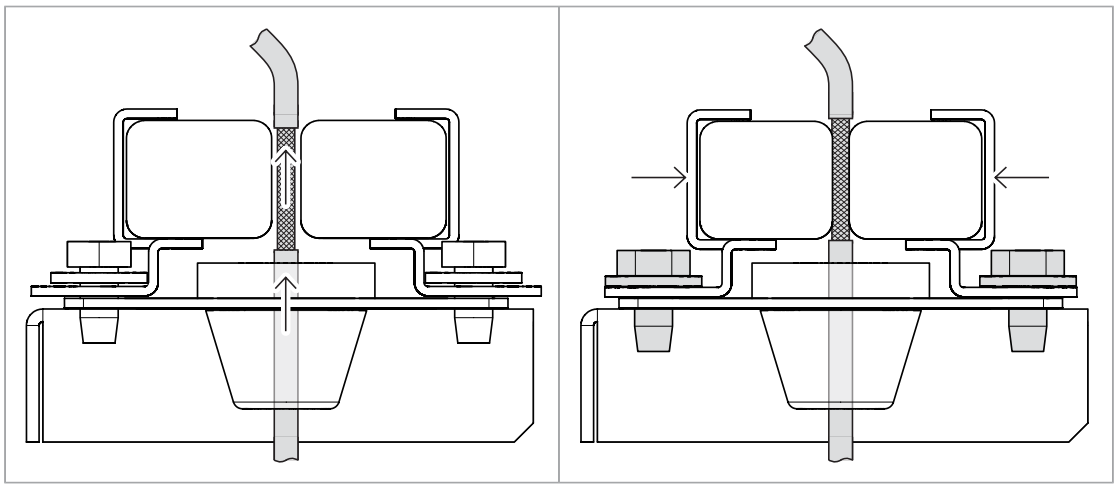

8. Route cables to the control unit in the swing-out frame. Refer to section Routing the control cables inside the cabinet (page 45).
9. Connect the cables. Refer to the circuit diagrams delivered with the drive and section Guidelines for connecting the control cables (page 43).

Routing the control cables inside the cabinet

Use the existing trunking in the cabinet where possible. Use sleeving if cables are laid against sharp edges. When running cables to or from a swing-out frame, leave enough slack at the hinge to allow the frame to open fully.

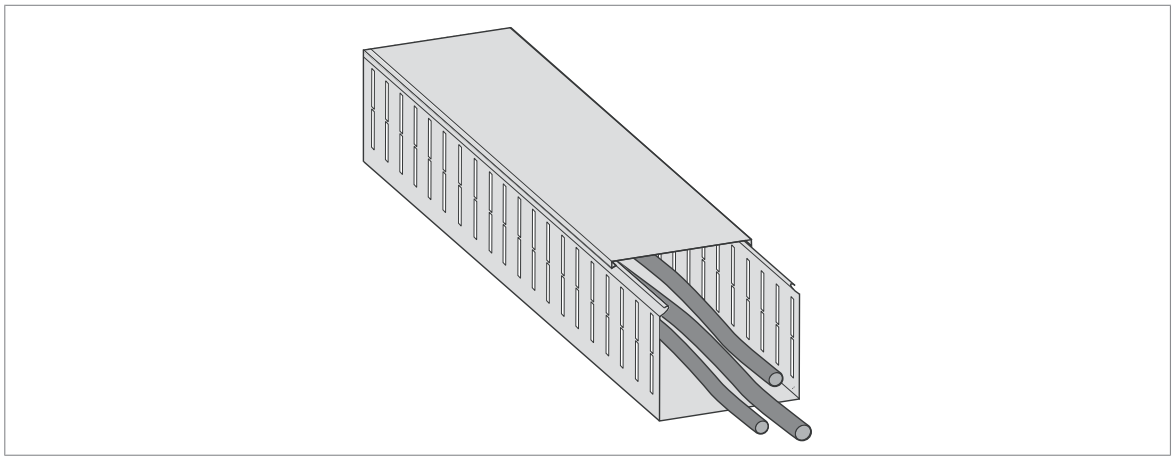

5

Installation checklist

Contents of this chapter

This chapter contains a checklist of the mechanical and electrical installation of the cooling unit.

Checklist

Examine the mechanical and electrical installation of the cooling unit before start-up. Do the inspection together with another person.

WARNING!
Obey the safety instructions of the drive. If you ignore them, injury or death, or damage to the equipment can occur. If you are not a qualified electrical professional, do not do installation, commissioning or maintenance work.

WARNING!
Do the steps in section Electrical safety precautions (page 37) before you start the work.

Make sure that ...	☑
The drive installation is completed. Refer to the checklists in the applicable drive manuals.	☐
The cooling unit is correctly attached to the floor. In marine applications, make sure that the unit is also attached from above.	☐
The bottom leakage hose leads to a sewer.	☐
The voltage of the pump motor power supply is correct. See the technical data or pump type designation label.	☐
The power supply cable for the pump motor(s) is connected to the correct terminals and the terminals are tightened to the correct torque.	☐

Make sure that ...	☑
The PE (ground) conductor is connected and the connection is tight.	☐
Stand-alone cooling unit (option +C139): The auxiliary power supply for the control circuits is connected to the correct terminals and the terminals are tightened to the correct torque.	☐
Stand-alone cooling unit (option +C139) with cabinet heater (option +G300) and/or lighting (option +G301): The power supply for the cabinet heater and/or lighting is connected to the correct terminals and the terminals are tightened to the correct torque.	☐
The external control cabling (if any) is connected to the correct terminals and the terminals are tightened to the correct torque.	☐
There are no tools, foreign objects or dust from drilling inside the cooling unit.	☐
All bleed valves and drain valves are closed (drive and cooling unit).	☐
The cap of the automatic float air vent (VA-103) is not fully tightened (loosen approximately 2…3 turns).	☐
The external cooling circuit is connected and the connections are tight.	☐
Stand-alone cooling unit (option +C139): The internal cooling circuit is connected and the connections are tight.	☐

6

Start-up

Contents of this chapter

This chapter contains a list for checking the installation.

Safety

WARNING!
Obey the safety instructions of the drive. If you ignore them, injury or death, or damage to the equipment can occur. If you are not a qualified electrical professional, do not do installation, commissioning or maintenance work.

WARNING!
Use the required personal protective equipment. Wear protective gloves and long sleeves. Some parts have sharp edges.

Use also the required eye, hand and respiratory protection when working with coolant. Refer to the safety data sheet (SDS) for Antifrogen® L coolant by Clariant.

If you do not obey these instructions, injury can occur.

Before start-up

Task	☑
Make sure that you have a sufficient quantity of the correct type of coolant available. For the coolant type, refer to Technical data (page 145). For the quantity of coolant in the drive cooling circuit, refer to the applicable hardware manual. For the quantity of coolant in the cooling unit, refer to Coolant flow and quantity (page 150).	☐
Make sure that the external coolant temperature and the ambient temperature are within the specified limits. Refer to Technical data (page 145) and Ambient conditions (page 150).	☐
Make sure that you have available: • tools for connecting hoses • air pump with a pressure gauge and standard tire head for the air pressure adjustment of the expansion vessel • container filled with coolant • buckets for bleeding and draining of the system • hoses for filling, draining and bleeding. Three hoses are included as standard in the cooling unit delivery. • pump for filling the coolant. ABB recommends a hand pump with max. 5 l/min (1.3 US gal/min) capacity for slow and air-free fill up. For example pumps, refer to Filling pump (page 155).	☐
If the cooling unit has been stored in cold or damp environment, warm and dry it with the cabinet heater (option +G300), or by some other means before the start.	☐

Adjusting air pressure of the expansion vessel

About the expansion vessel

The expansion vessel is divided into two sections: liquid and air sections. The air section is the reservoir into which the liquid section expands whenever a temperature rise increases the volume of the liquid in the system. You must set the air counterpressure at the system start-up.

Pressure adjustment procedure

The component designations refer to the diagrams in chapter Piping and instrumentation diagrams (page 163) and the drawings in section Layout drawings (page 18). Study the drawings before you start the task and keep them at hand when you do the task.

WARNING!
Stop the drive and do the steps in section Electrical safety precautions (page 37) before you start the work.

Task	☑
Close the expansion vessel shut-off valve (V0003) through which the expansion vessel (PA-102) is coupled to the internal cooling circuit.	☐
Connect a hose to the expansion vessel bleed valve (V0011) and put the other end of the hose into a bucket.	☐
Open the expansion vessel bleed valve (V0011) to release the pressure in the expansion vessel.	☐
Remove (unscrew by hand) the protective cap that covers the air valve at the bottom of the expansion vessel.	☐
Connect an air pump with a gauge to the air valve and measure the pressure in the lower section of the expansion vessel. Set the air counterpressure to 80 kPa (0.8 bar [11.6 psi]).	☐
Install the protective cap onto the air valve.	☐

Task	☑
Close the expansion vessel bleed valve (V0011) and remove the hose from the valve.	☐
Open the expansion vessel shut-off valve (V0003).	☐

Filling up the cooling circuit and starting the cooling unit

WARNING!
Stop the drive and do the steps in section Electrical safety precautions (page 37) before you start the work.

WARNING!
Fill and bleed the cooling circuit before you start the coolant pump(s). If the pump operates dry, or there is air in the system, damage to the pump seals can occur.

Keep the pump shut-off valves closed until you start filling the internal cooling circuit. The pumps are filled with a protective mixture at the factory. The mixture can be left in the cooling circuit.

The component designations refer to the diagrams in chapter Piping and instrumentation diagrams (page 163) and the drawings in section Layout drawings (page 18). Study the drawings before you start the task and keep them at hand when you do the task.

Task	☑
Preparing the drive and cooling unit	
Check and adjust the air pressure in the expansion vessel if not done yet. See Adjusting air pressure of the expansion vessel (page 50).	☐
Make sure that the drain valves in all cubicles of the drive cabinet line-up are closed.	☐
Open the valves at the inlet and outlet of the pump(s) by using loose valve handles or 1/2″ socket wrench (valves V0004, V0006, V0005[1)], V0007[1)], GA-201, GA-202[1)]).	☐
Open the inlet, outlet and bleed valves (outlet drain valve) in one cubicle of the drive. Keep the valves still closed in the other drive cubicles. (The cubicles will be filled one at a time.)	☐
Connect a filling hose to the fill valve of the cooling unit (V0012 or V0014[1)]).	☐
Lead the bleed hose of the drive cubicle to bucket.	☐
Open the shut-off valve (V0001) of the automatic float air vent (VA-103).	☐
Make sure that the cap of the automatic float air vent (VA-103) is not fully tightened (loosen approximately 2…3 turns).	☐
Open the fill valve of the cooling unit (V0012 or V0014[1)]).	☐
Filling	
Fill the system by pumping coolant in through the fill valve (V0012 or V0014[1)]). Pump slowly (max. 5 l/min [1.3 US gal/min]) to minimize foaming of the coolant.	☐
When there is a sufficient quantity of coolant in the piping, the coolant begins to overflow from the bleed hose of the drive cubicle. Drain some coolant to get all air out of the system, then close the bleed, inlet and outlet valves in the drive cubicle.	☐
Lead the bleed hose of the next drive cubicle to a bucket, and open the inlet, outlet and bleed valves of the cubicle. Fill and bleed the drive cubicle. Repeat the procedure for the remaining drive cubicles.	☐
Open the inlet and outlet valves of all drive cubicles and let the remaining air come out through the automatic float air vent (VA-103) of the cooling unit. The pressure in the internal circuit starts to increase.	☐

Task	☑
WARNING! If the pump seals are dry, there can be some leakage from the seals initially. If there are leaks near the pump sealing during the filling procedure, operate the pump by using manual pump control switch [S210]. Operate the pump for several seconds to make sure that the seals start to seal. To operate the pump, you must switch on the pump power supply and auxiliary power supply.	☐
Monitor the pressure on the pressure gauge (PI-203). Increase the pressure up to 250 kPa (2.5 bar) by pumping coolant in from the fill valve (V0012 or V0014[1)]). When the pressure has been reached, close the fill valve and stop the fill-in pump. Keep the fill hose still coupled for later use.	☐
Open the pump bleed valves (on the pump casing). See the separate pump manual for instructions. Check the pressure again, and add some coolant if necessary. **WARNING!** Do not fill in too much coolant. Make sure that the maximum permitted operating pressure (600 kPa [6.0 bar], indicated by pressure gauge PI-203) is not exceeded.	☐
Bleeding the cooling system	
Switch on the power supplies: • the pump power supply • the auxiliary power supply for the control circuits • the power supply for the cabinet heater (option +G300), and/or lighting (option +G301). See the circuit diagrams delivered with the cooling unit.	☐
Bleed the system as follows: 1. Open the shut-off valve for the automatic float air vent (V0001). 2. Make sure that the cap of the automatic float air vent (VA-103) is not fully tightened (loosen approximately 2…3 turns). 3. Wait for the air to leave the system. 4. Open the pump de-airing screw slightly. When coolant starts to leak out, close the screw. 5. Operate the pump with manual pump control switch [S210] for several seconds. 6. Do steps 4…5 again until no air comes out of the pump. 7. Make sure that the pump de-airing screw is correctly tightened. 8. Close the shut-off valve for the automatic float air vent (V0001).	☐
Starting the cooling unit and checking the pressure	
Make sure that the control valve (V0016) is set to the design position which is shown on the label on the door.	☐
If the cooling unit does not have its own control panel, connect a control panel to it.	☐
WARNING! For the procedures that follow, use manual pump control switch [S210] for starting and stopping the pump. Do not start the pump through the control panel, because it will keep the pump operating for 10 minutes. If there is air in the system, this can cause damage to the pump.	
Start the pump with manual pump control switch [S210].	☐
Monitor inlet and outlet liquid pressures of the pump through parameters 01.01, 01.02 on the control panel.	☐
Stop the pump when the values of parameters 01.01, 01.02 are stable. **Note:** Values that are not stable can be caused by air in the system. If the values do not become stable, repeat the bleeding procedure described above. Inside the cooling unit, there is also pressure gauge PI-203. After stopping the pump, the pressure gauge should indicate a pressure of 250 kPa (2.5 bar).	☐
Final check for remaining air in the system	
Start the pump again for a couple of minutes with manual pump control switch [S210].	☐

Task	☑
Listen for a humming sound or feel the piping for vibration to find out if there is still air left. Also monitor the values of parameters 01.01, 01.02. If there is a humming sound, or vibration in the piping, or the values of parameters 01.01, 01.02 are not stable: • Make sure that the shut-off valve (V0001) for automatic float air vent (VA-103) is open. • Make sure that the cap of the automatic float air vent (VA-103) is not fully tightened. • Stop the pump, open the pump bleed valves and let air out. If necessary, add coolant until the pressure is 250 kPa (2.5 bar). Repeat the procedure until all air is removed from the system.	☐
Stop the pump. Make sure that all drain and bleed valves are closed. Remove the filling hose.	☐
Close the shut-off valve for automatic float air vent (V0001).	☐
Close and attach the swing-out frame.	☐
Close the cabinet door.	☐

1) Only in the two-pump cooling unit.

Basic settings in the control program

For information on the use of the control panel, see ACS-AP-I, -S, -W and ACH-AP-H, -W Assistant control panels user's manual (3AUA0000085685 [English]).

Task	☑
Make sure that parameter 20.04 agrees with the installed number of pumps.	☐
Two-pump unit ACS880-1007LC-0195: Activate and tune the delays of the automatic pump alternation function (parameters 20.01, 20.05, 20.06).	☐
If the drive and the cooling unit will be out of use for long time periods, activate the Standby function with parameter 20.08.	☐
Check the operation of the auxiliary cooling fan [G210] with parameter 20.29.	☐
If the cooling unit is equipped with the 2-way control valve (option +C242): Make sure that the valve control function is enabled (parameter 22.01 is set to value **On**).	☐
Start/stop settings when the LCU will be controlled through the IO	
Make sure that: • parameter 20.03 is set to value **Local control**. This defines digital input DI6 as the source for the start/stop signal in the remote control mode. • the control panel (if any) is in remote control mode. If necessary, change the control mode with the **Loc/Rem** key.	☐
Give a start command and stop command through digital input DI6. Make sure that the cooling unit starts and stops accordingly. Note that there is an user-adjustable stop delay (parameter 20.07).	☐
Start/stop settings when the LCU will be controlled through a serial link	
Make sure that: • parameter 20.03 is set to value **Fieldbus A**. This defines fieldbus adapter A as the source for the start/stop signal in the remote control mode. • the control panel (if any) is in remote control mode. If necessary, change the control mode with the Loc/Rem key.	☐
Give a start command and stop command from the overriding control system through Main control word bit b0. Make sure that the cooling unit starts and stops accordingly. You can monitor the command status from the bits of parameter 06.01. Note that there is an user-adjustable stop delay (adjustable with parameter 20.07).	☐

On-load settings

Task	☑
Two-pump unit ACS880-1007LC-0195: Change the pump in duty, and make sure that both pumps start, operate and stop normally, and the system pressure is normal. ABB also recommends that you do these tasks: • Make sure that the parameter settings for the automatic pump alternation function (20.01, 20.05, 20.06) are correct. • Make sure that the pump redundancy function operates correctly: 1. Take one pump out of use, that is, open its protective circuit breaker 2. Make sure that the cooling unit starts and operates with the pump available 3. Change the pump in use and do the test again.	☐
Define the warning limit for the minimum inlet pressure with parameter 31.01. Set the warning limit 1 bar below the pressure value during normal operation. Parameter 01.01 shows the measured actual value.	☐
Define the warning limit for the maximum coolant temperature at internal circuit outlet with parameter 31.10. If the measured temperature during normal operation is less than +36 °C, decrease the default warning limit accordingly. Parameter 01.23 shows the measured actual value.	☐
Define the warning limit for the maximum coolant pressure at the pump outlet with parameter 31.03. A rule of thumb value: 1 bar above the value measured during normal operation. Parameter 01.02 shows the measured actual value. **Note:** The higher the liquid temperature is, the higher the pressure is.	☐
Check the coolant temperature in the internal circuit as the load varies. Adjust the external cooling circuit flow when necessary.	☐

7

Maintenance

Contents of this chapter

This chapter contains maintenance instructions for the cooling unit.

Maintenance intervals

The tables below show the maintenance tasks which can be done by the end user. The complete maintenance schedule is available on the Internet (https://new.abb.com/drives/services/maintenance/preventive-maintenance). For more information, consult your local ABB Service representative (www.abb.com/searchchannels).

Description of symbols

Action	Description
I	Inspection (visual inspection and maintenance action if needed)
P	Performance of on/off-site work (commissioning, tests, measurements or other work)
R	Replacement

Recommended maintenance intervals after start-up

Recommended annual actions by the user	
Connections and environment	
Quality of supply voltage	P
Spare parts	
Spare parts	I

Recommended annual actions by the user	
Inspections by user	
Tightness of terminals	I
Dustiness, corrosion and temperature	I
Cooling liquid pipe connections	I
Coolant antifreeze concentration	P

Recommended every 2nd year actions by the user	
Inspection of coolant quality	P
Inspection of expansion tank air pressure	P
External circuit of main heat exchanger (temperature/flow/pressure)	I

Item	Years from start-up						
	3	6	9	12	15	18	21
Cooling							
Coolant draining and refill		R		R		R	
Pump and motor			R			R	
Expansion tank			R			R	
Control unit fan 24 VDC			R			R	
Aging							
ZCU control unit				R			
ZCU control unit battery (Real-time clock)		R		R		R	
Control panel battery (Real-time clock)			R			R	
Cabinet auxiliary power supplies [1)]				R			

[1)] Check amount of auxiliary power supplies and buffer modules from cabinet or manufactured bill of materials.

Note:

- Maintenance and component replacement intervals are based on the assumption that the equipment is operated within the specified ratings and ambient conditions. ABB recommends annual drive inspections to ensure the highest reliability and optimum performance.
- Long term operation near the specified maximum ratings or ambient conditions may require shorter maintenance intervals for certain components. Consult your local ABB Service representative for additional maintenance recommendations.

Adding coolant

Refer to Filling up the cooling circuit and starting the cooling unit (page 51).

Draining the cooling unit

WARNING!
Obey the safety instructions of the drive. If you ignore them, injury or death, or damage to the equipment can occur. If you are not a qualified electrical professional, do not do installation, commissioning or maintenance work.

WARNING!
Use the required personal protective equipment. Wear protective gloves and long sleeves. Some parts have sharp edges.

Use also the required eye, hand and respiratory protection when working with coolant. Refer to the safety data sheet (SDS) for Antifrogen® L coolant by Clariant.

If you do not obey these instructions, injury can occur.

The designations refer to the drawings in Piping and instrumentation diagrams (page 163). Study the drawings before starting the task and keep them at hand when performing it.

1. Stop the drive, including the liquid-cooling unit, and do the steps in section Electrical safety precautions (page 37) before you start the work.
2. Open the cabinet door.
3. Connect drain hoses to the drain/fill valves (V0010, V0012). Put the other end of the hoses into a bucket. The drain hoses are included in the cooling unit delivery.

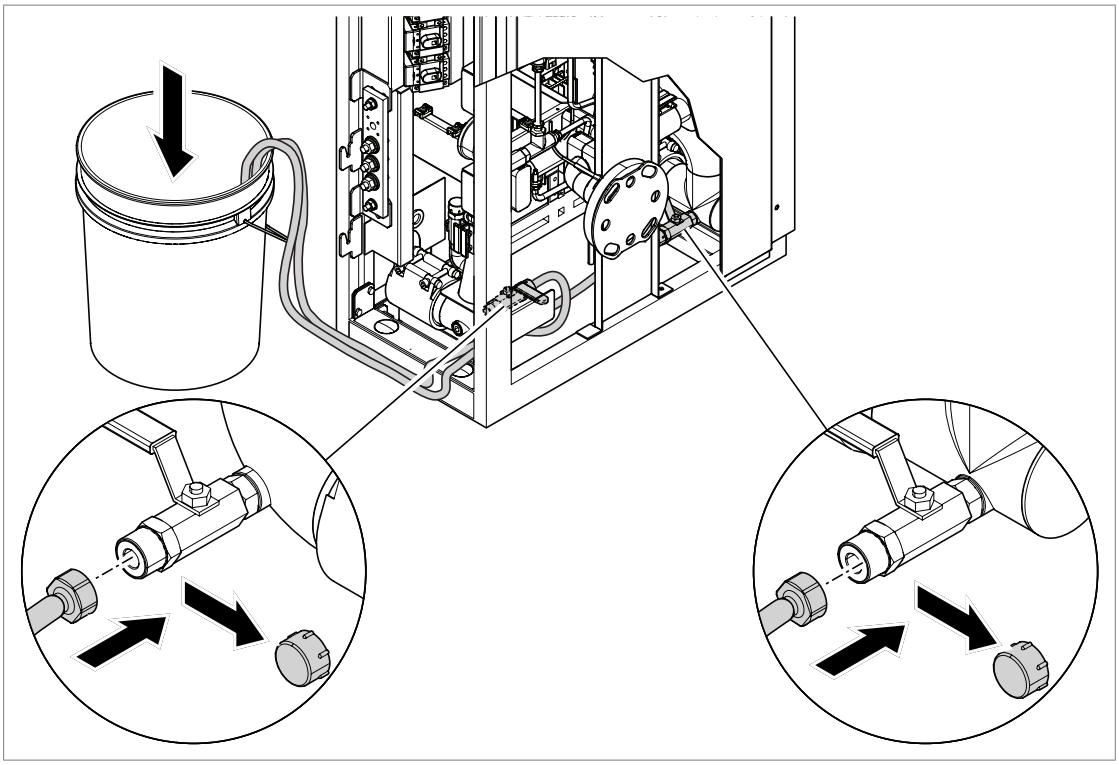

4. Make sure that the pump shut-off valves (V0004, V0005, V0006, V0007) are open.
5. Open the inlet and outlet valves of all drive cubicles.

6. Open the drain/fill valves (V0010, V0012).

WARNING!
Open the valves carefully. The system is pressurized (2.5 bar [36 psi]).

7. Open the expansion vessel bleed valve (V0011) to let air replace the coolant.
8. If the system will be empty for a long period, dry the piping with oil-free compressed air. The maximum pressure is 600 kPa (87 psi).

Storing the cooling unit

Fill the cooling circuit with coolant before the storing. See the procedure in Filling up the cooling circuit and starting the cooling unit (page 51).

Bleeding the cooling system

WARNING!
Obey the safety instructions of the drive. If you ignore them, injury or death, or damage to the equipment can occur. If you are not a qualified electrical professional, do not do installation, commissioning or maintenance work.

WARNING!
Use the required personal protective equipment. Wear protective gloves and long sleeves. Some parts have sharp edges.

Use also the required eye, hand and respiratory protection when working with coolant. Refer to the safety data sheet (SDS) for Antifrogen® L coolant by Clariant.

If you do not obey these instructions, injury can occur.

WARNING!
Keep the shut-off valve for the automatic float air vent (V0001) closed during normal operation. If the valve is open, leakage can occur.

1. Open the shut-off valve for the automatic float air vent (V0001).
2. Make sure that the cap of the automatic float air vent (VA-103) is not fully tightened (loosen approximately 2…3 turns).
3. Wait for the air to leave the system.
4. Open the pump de-airing screw slightly. When coolant starts to leak out, close the screw.
5. Operate the pump with manual pump control switch [S210] for several seconds.
6. Do steps 4…5 again until no air comes out of the pump.
7. Make sure that the pump de-airing screw is correctly tightened.
8. Close the shut-off valve for the automatic float air vent (V0001).

Checking the quality of the coolant

The manufacturer checks the quality of coolant. Send a 250 ml (8.5 US fl oz) sample to Clariant. See www.clariant.com.

Antifreeze on-site testers are available from the Antifrogen® distributors. See www.clariant.com.

Cleaning and drying the leakage detector

WARNING!
Obey the safety instructions of the drive. If you ignore them, injury or death, or damage to the equipment can occur. If you are not a qualified electrical professional, do not do installation, commissioning or maintenance work.

WARNING!
Use the required personal protective equipment. Wear protective gloves and long sleeves. Some parts have sharp edges.

Use also the required eye, hand and respiratory protection when working with coolant. Refer to the safety data sheet (SDS) for Antifrogen® L coolant by Clariant.

If you do not obey these instructions, injury can occur.

1. Stop the drive, including the liquid-cooling unit, and do the steps in section Electrical safety precautions (page 37) before you start the work.
2. Open the cabinet door.
3. If there is liquid on the bottom of the cooling unit, dry it. Dry also the leakage detector.
4. Release the screw (a) of the detector assembly plate, then pull the plate and the detector out of the cabinet. The wiring cannot be disconnected, but there is sufficient slack in the wiring to do the cleaning.

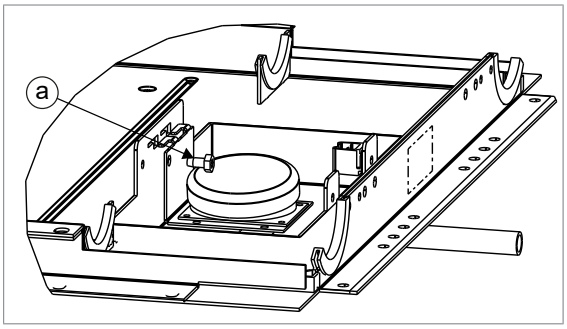

5. Flush the detector with clean water and dry the sensor carefully.
6. Install the detector.
7. Close the cabinet door and start the cooling unit. Reset the fault or warning.
8. If the fault or warning is repeated after the reset, replace the detector.

ACS880-1007LC-0070 – Replacing the pump unit

WARNING!
Obey the safety instructions of the drive. If you ignore them, injury or death, or damage to the equipment can occur. If you are not a qualified electrical professional, do not do installation, commissioning or maintenance work.

WARNING!
Use the required personal protective equipment. Wear protective gloves and long sleeves. Some parts have sharp edges.

Use also the required eye, hand and respiratory protection when working with coolant. Refer to the safety data sheet (SDS) for Antifrogen® L coolant by Clariant.

If you do not obey these instructions, injury can occur.

If you cannot easily access all the necessary components inside the cabinet, and there is sufficient free space around the cabinet, you can remove the cabinet rear wall for the duration of the maintenance. You can also partially remove the side wall, but the flanges prevent you from fully removing it.

1. Stop the drive, including the liquid-cooling unit, and do the steps in section Electrical safety precautions (page 37) before you start the work.
2. Open the cabinet door.
3. Remove the eight screws that attach the swing-out frame to the cabinet frame (four on each side).

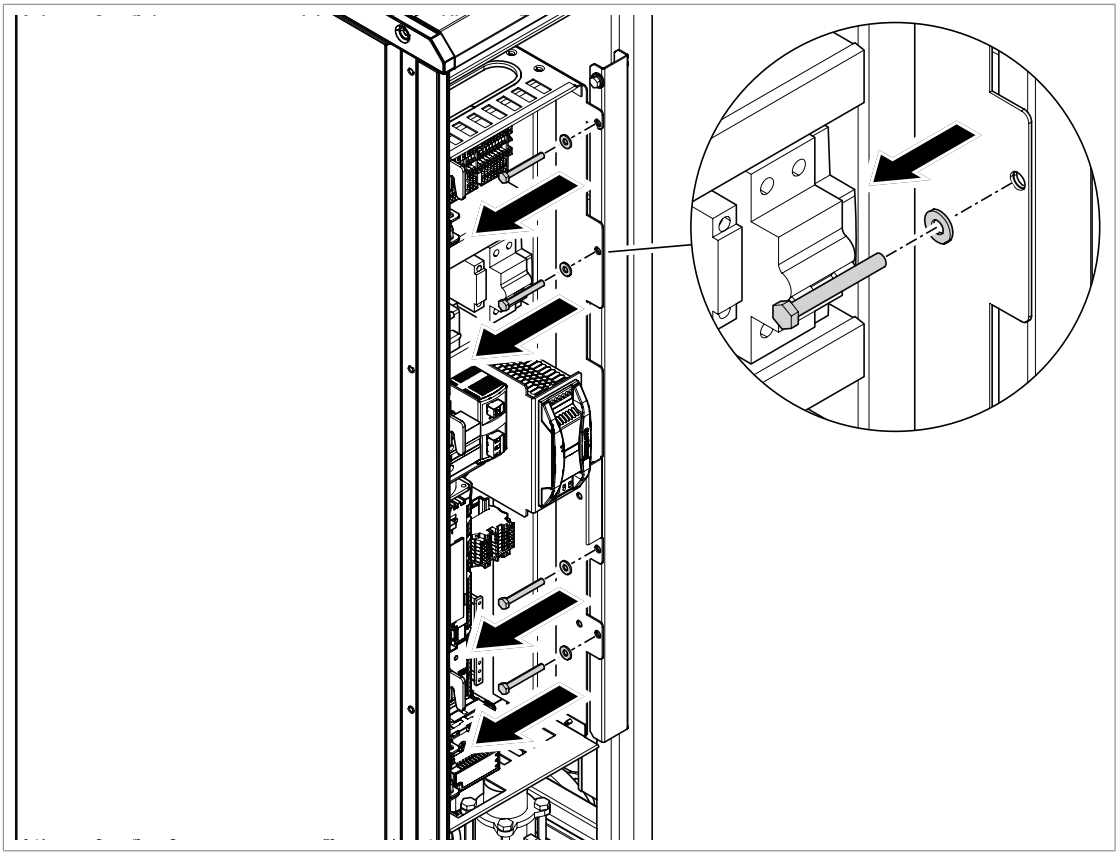

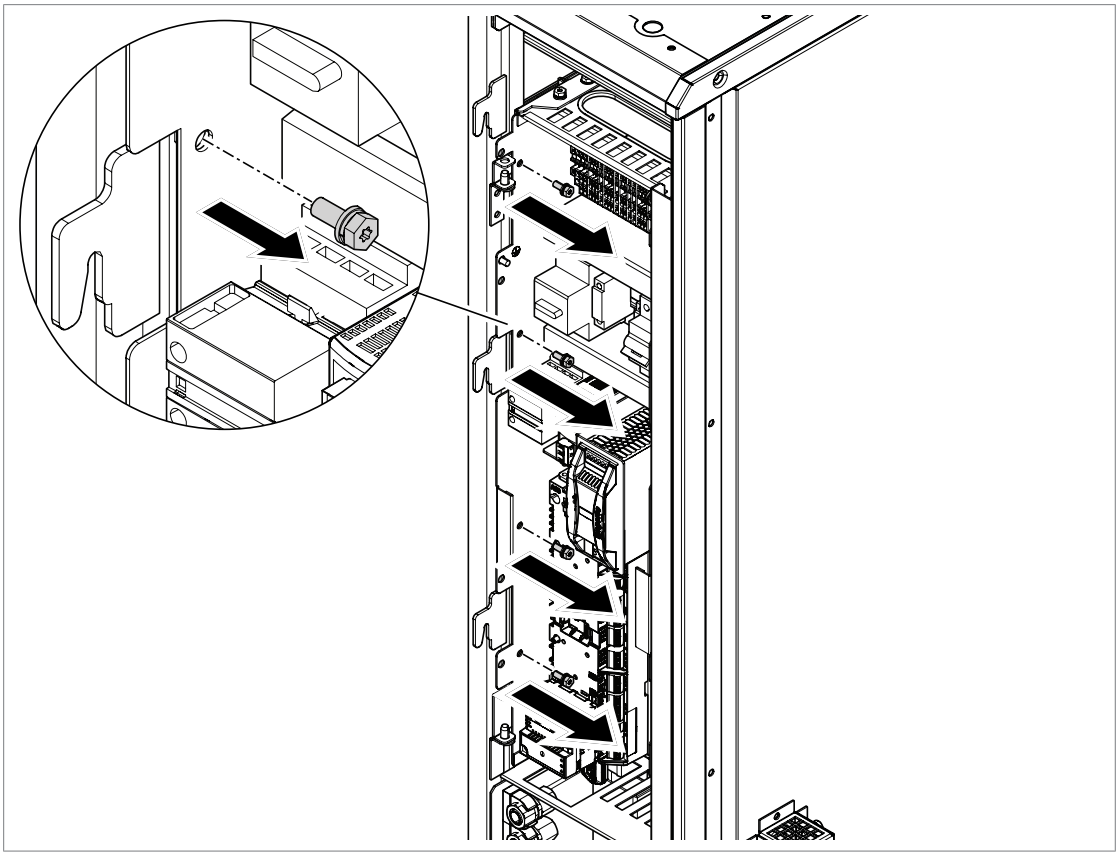

4. Open the swing-out frame.

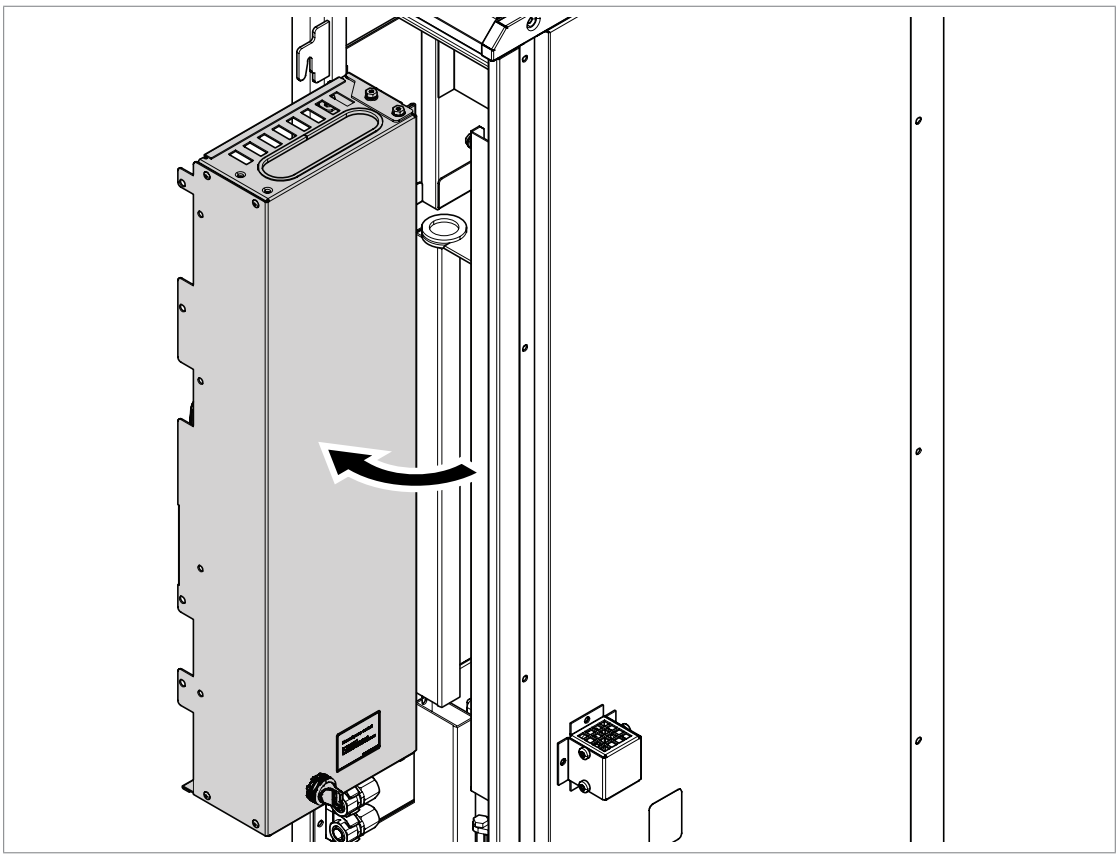

5. Remove the gasket on top of the motor.

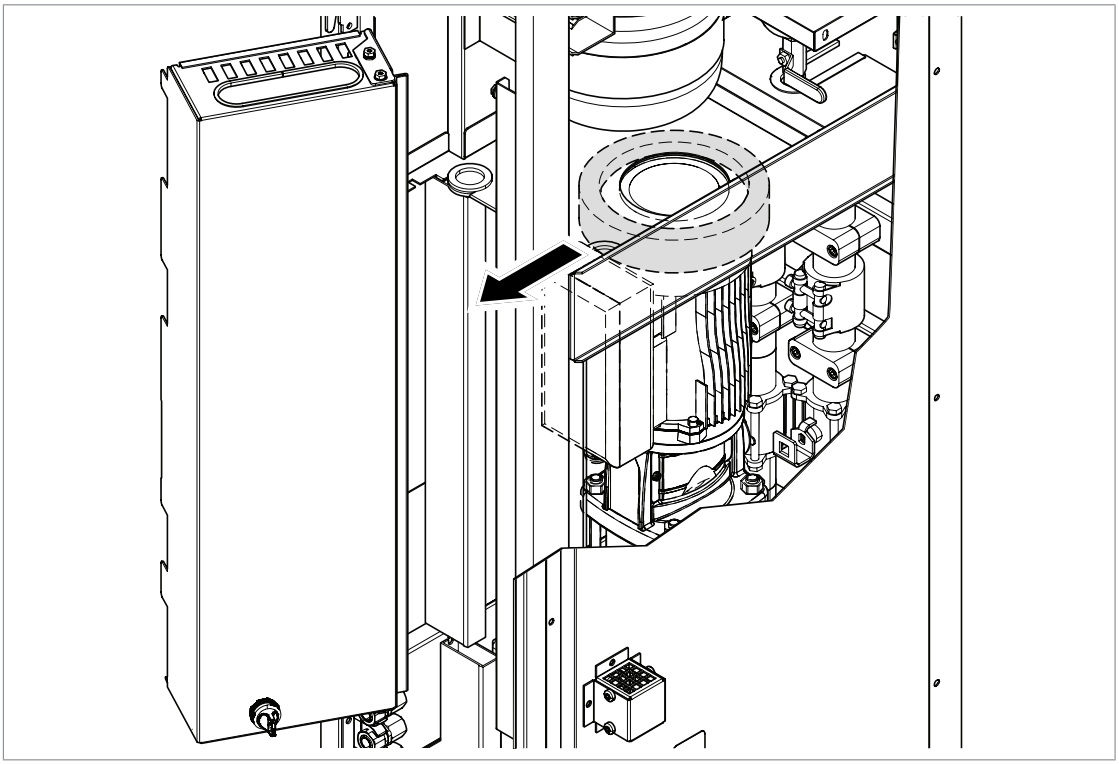

6. Remove the cover from the motor connection box.

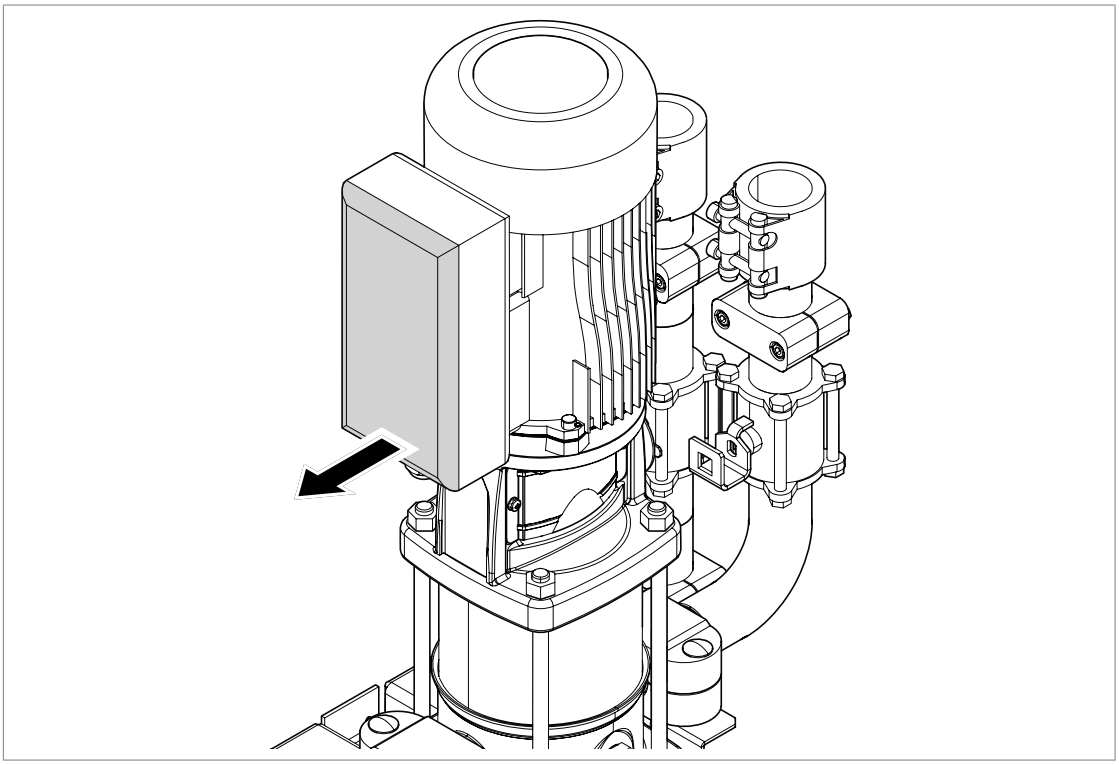

7. Record the connection type (delta or star).

8. Disconnect the conductors from the motor terminals. Pull the supply cable out and move it out of the way.

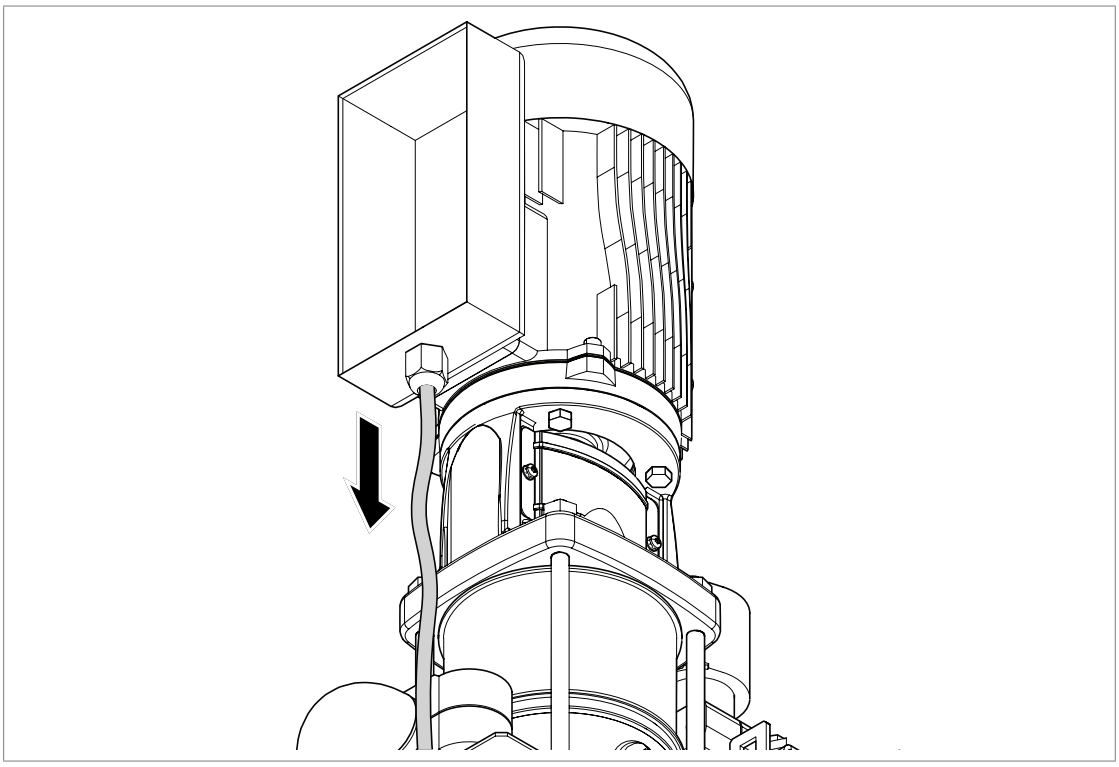

9. Connect the drain hoses to the two drain/fill valves (V0010, V0012). Put the other end of the hoses into a bucket. Secure the hoses to prevent coolant spills caused by the possible movement of the hoses during depressurization. The drain hoses are included in the cooling unit delivery.

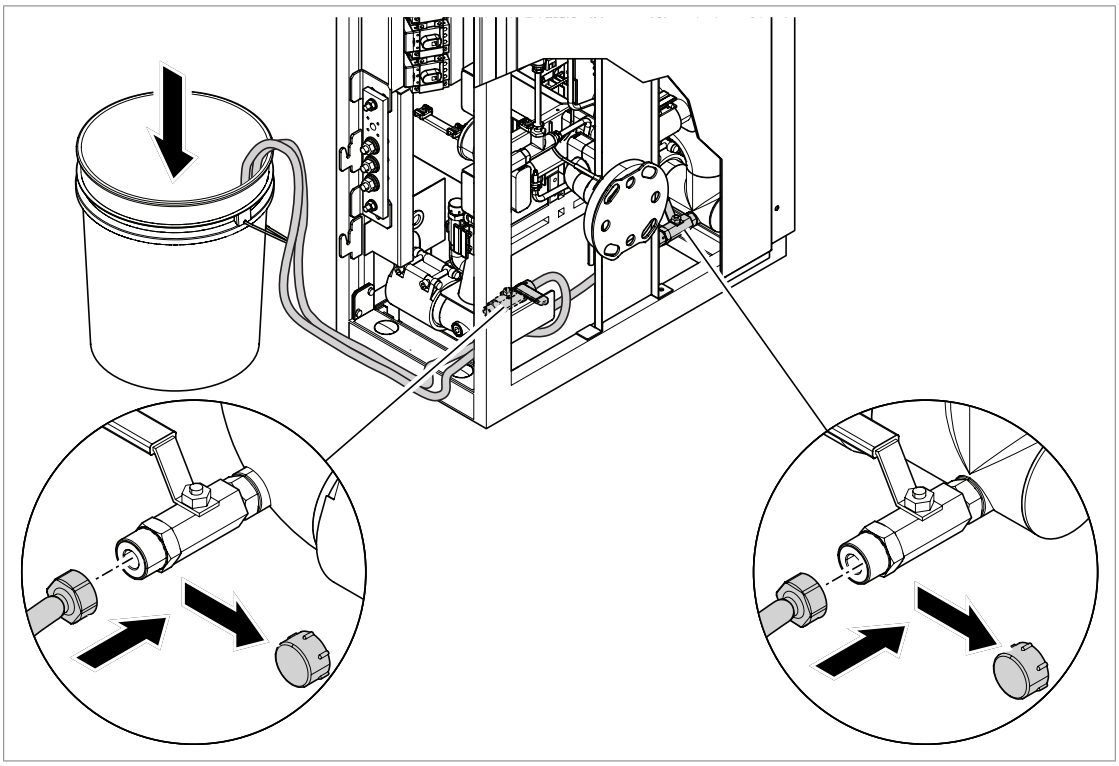

10. Open the drain/fill valves (V0010, V0012) momentarily to release the pressure from the system.

WARNING!
Open the valves carefully. The system is pressurized (2.5 bar [36 psi]).

Note: It is not necessary to fully drain the unit.

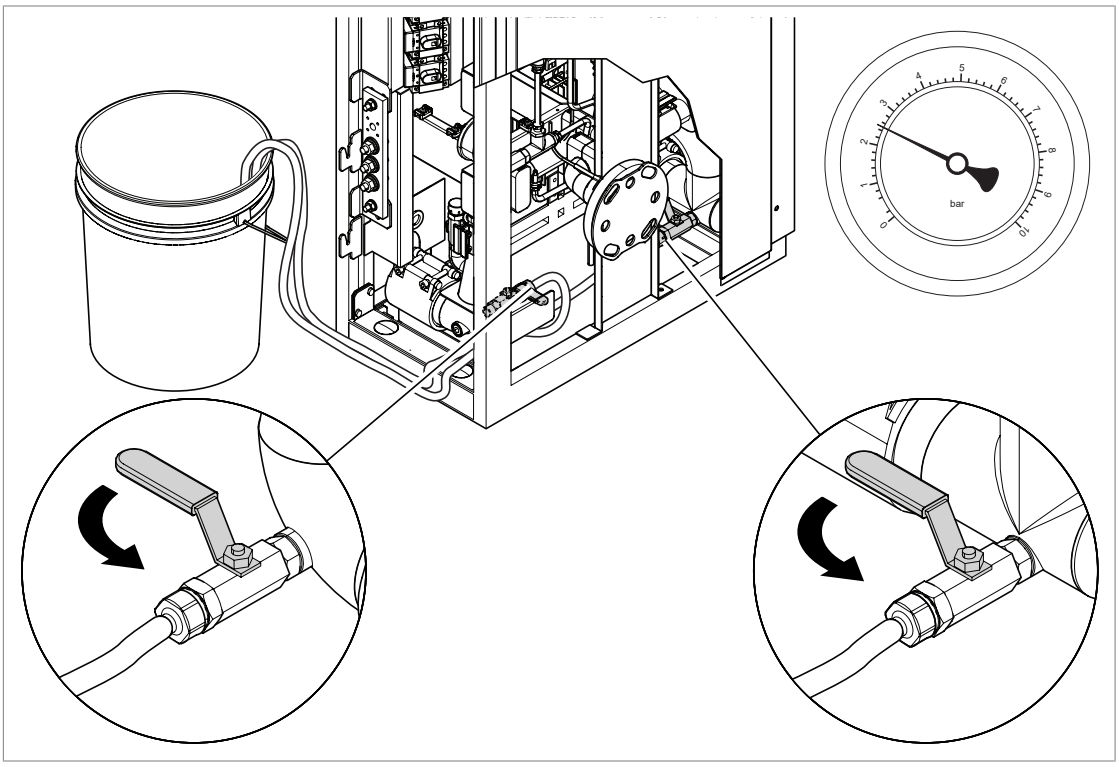

11. Close the drain valves when the coolant pressure gauge (PI-203) shows zero. Remove the drain hoses.

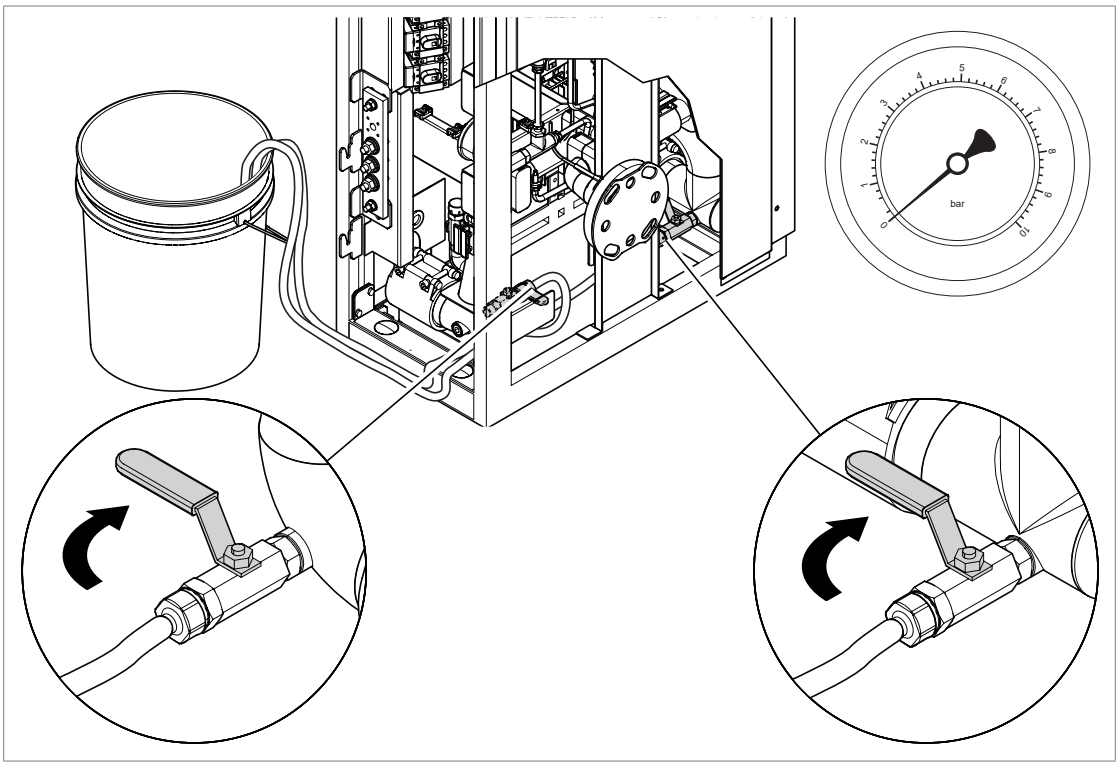

12. Close the two pump shut-off valves (V0004, V0006) with a ½” wrench or square head socket.

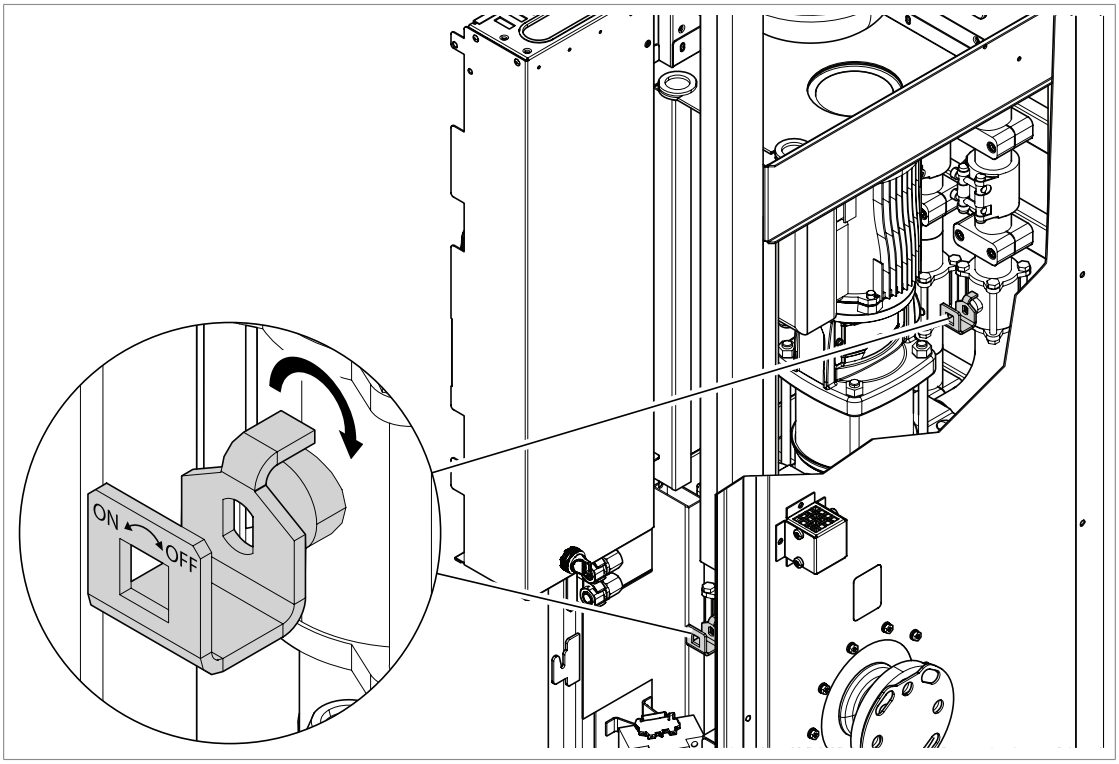

13. Remove the bolts that keep the pipe clamps together (two on each clamp).

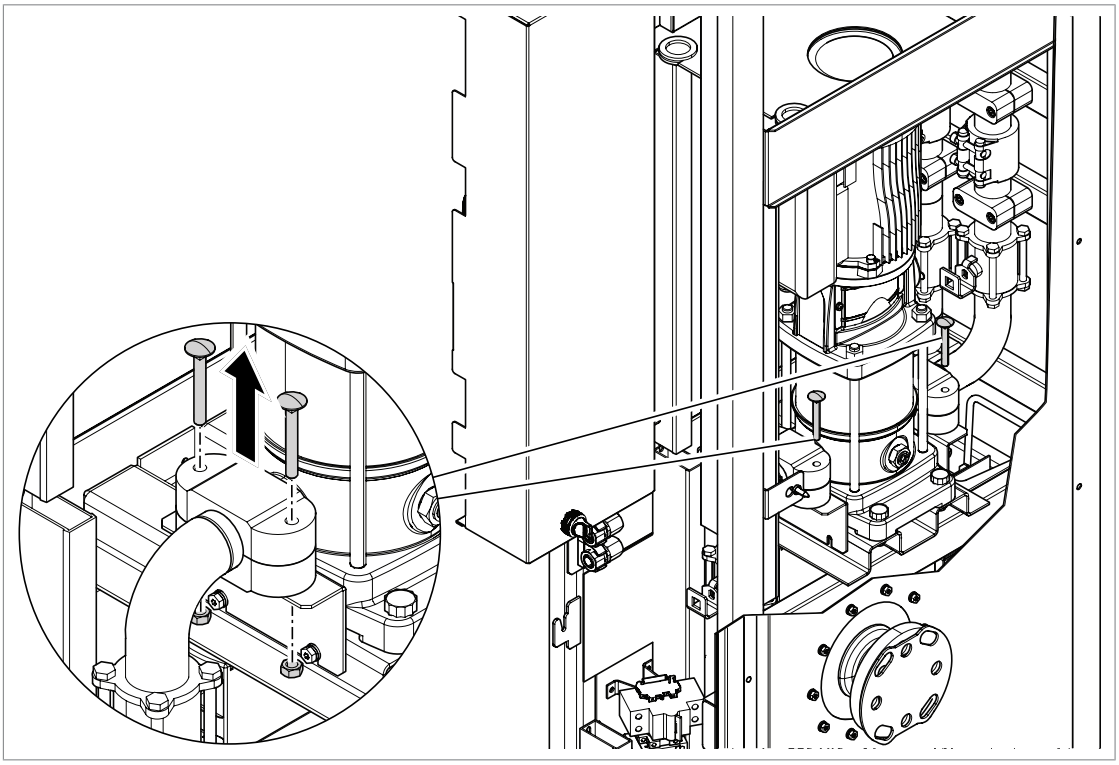

14. Remove the pipe clamp upper parts.

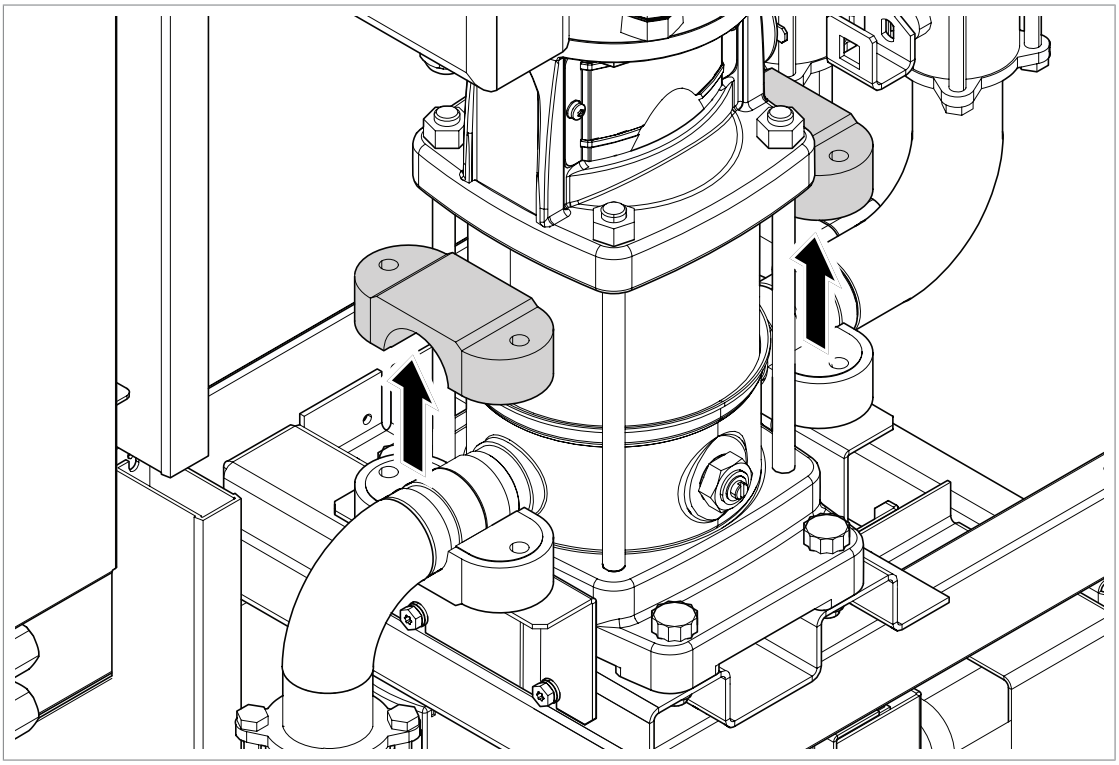

15. Remove the pipe clamp support brackets.

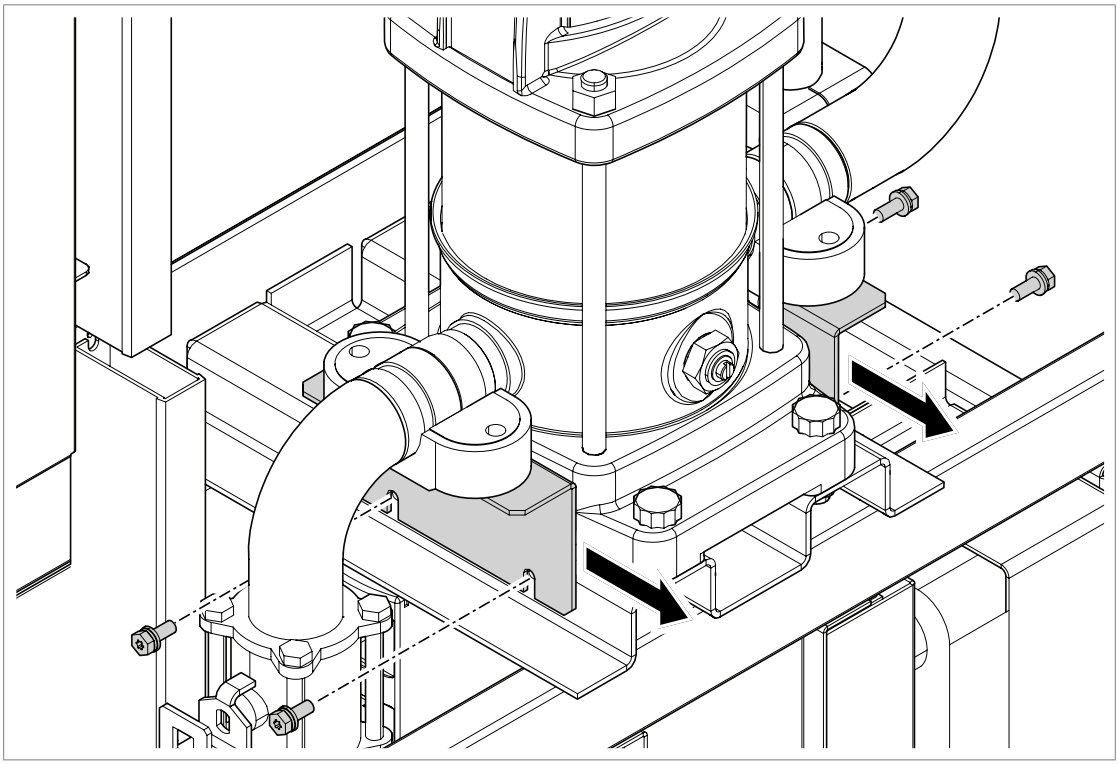

16. Remove the pipe clamp lower parts.

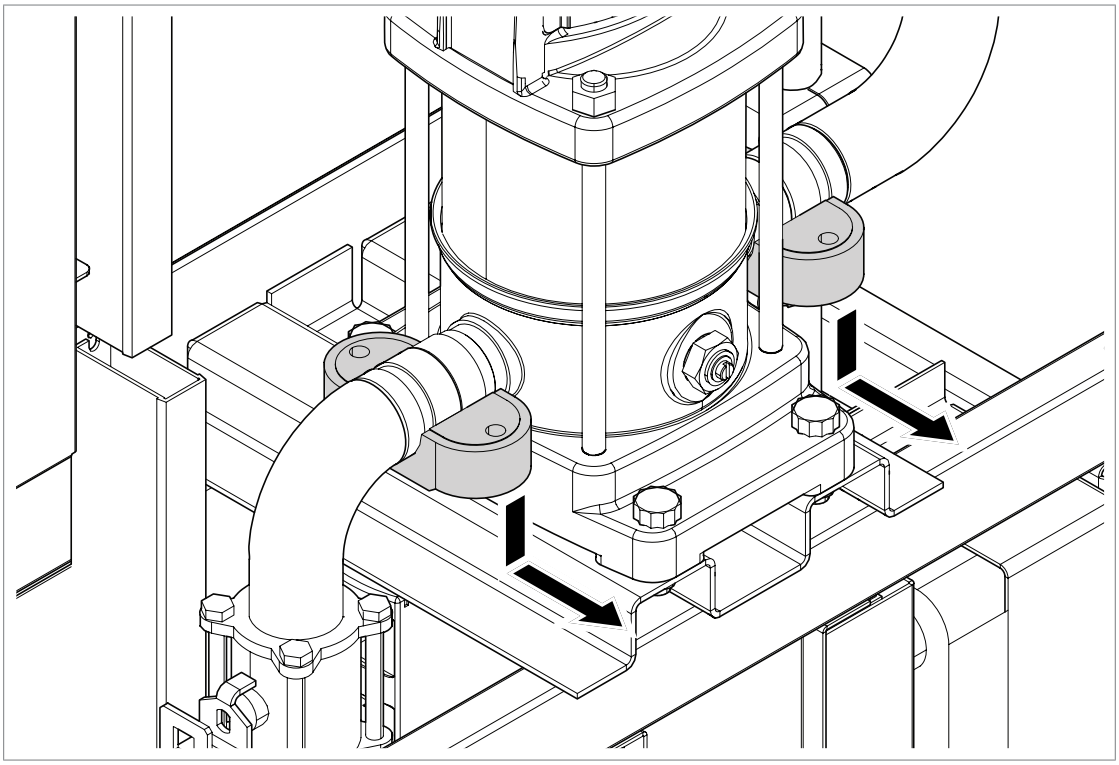

17. Get two drain boxes and connect a drain hose to each box. The drain boxes are included in the cooling unit delivery.

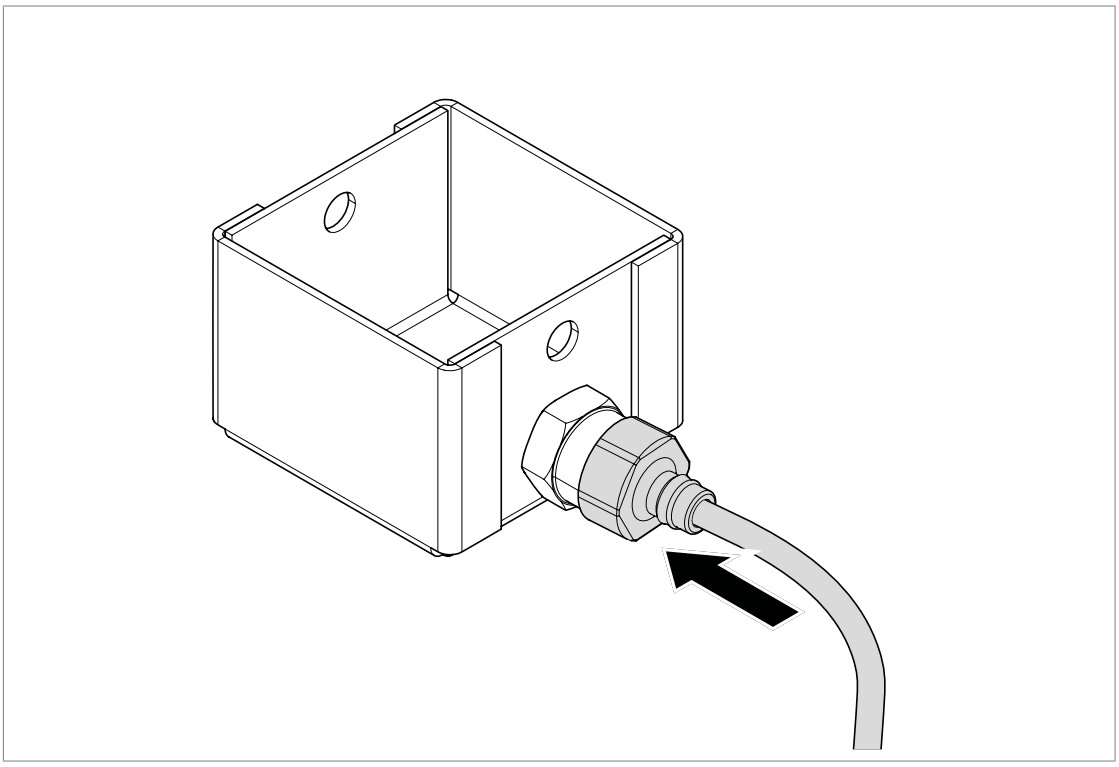

18. Attach the drain boxes below the rubber seals with cable ties. Put the other end of the drain hoses into a bucket.

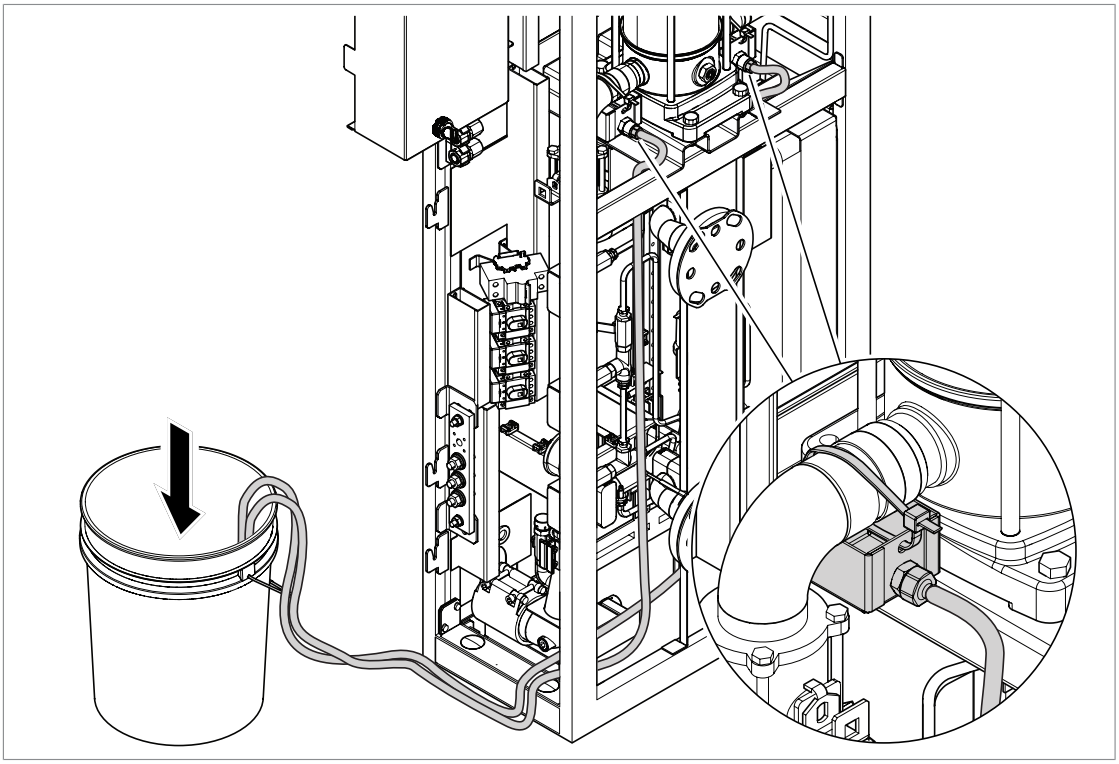

19. Remove the rubber seals and drain the coolant into the drain boxes.

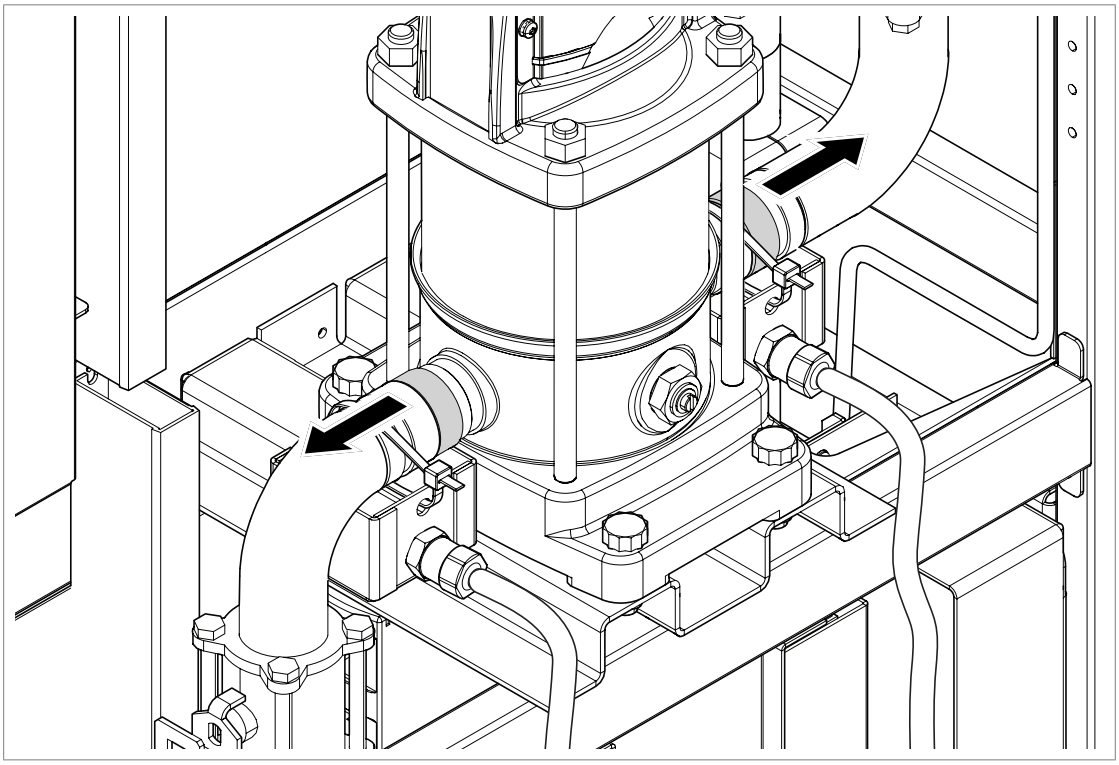

20. Remove the nine screws that attach the plate to the cabinet frame on top of the pump unit. Then remove the plate or lift it out of the way.

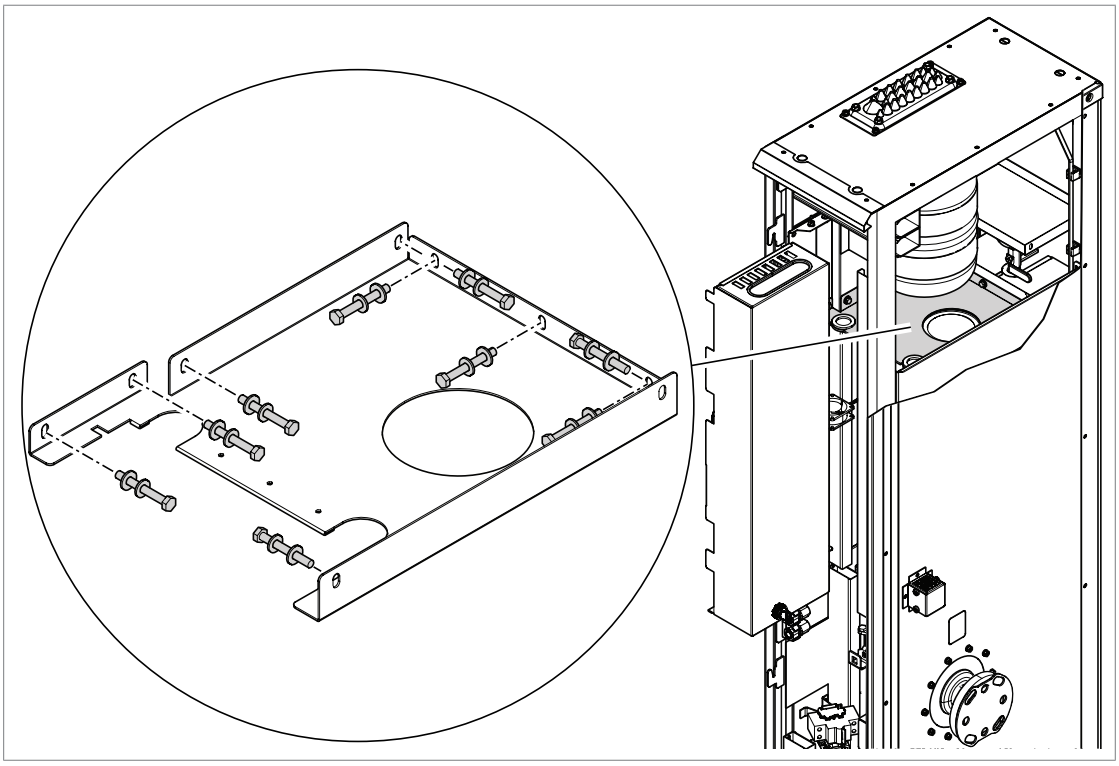

21. Attach a lifting device to the pump unit.

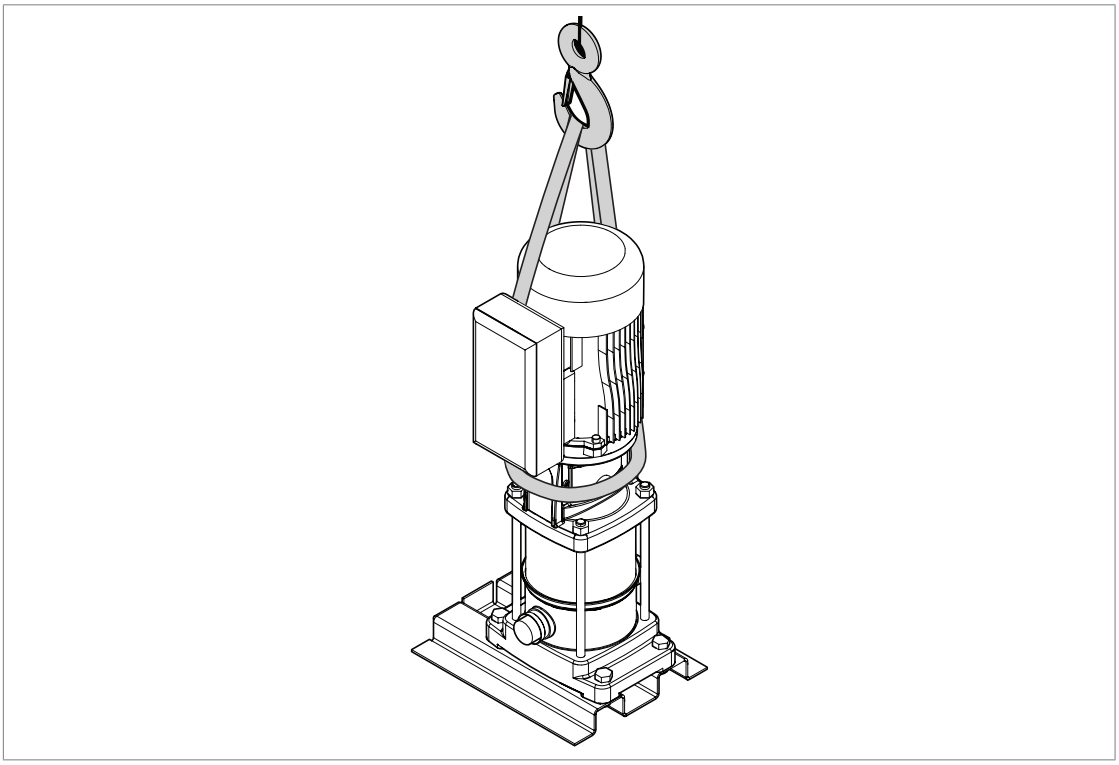

22. Remove the four bolts that attach the pump unit to the cabinet frame.

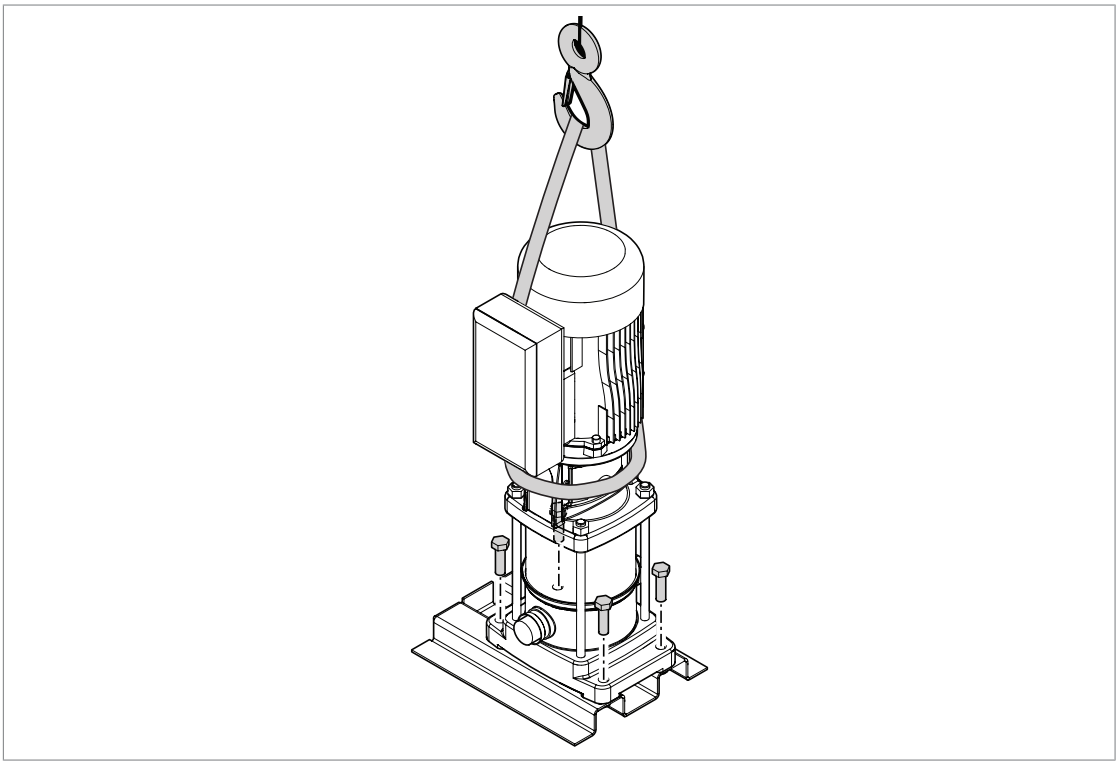

23. Use the lifting device to lift the pump unit out of the cabinet.

WARNING!
Make sure that the lifting device is safely attached to the pump unit. Be careful when you lift the pump unit. The pump unit is heavy. If it accidentally moves or falls, injury to personnel or damage to the equipment can occur.

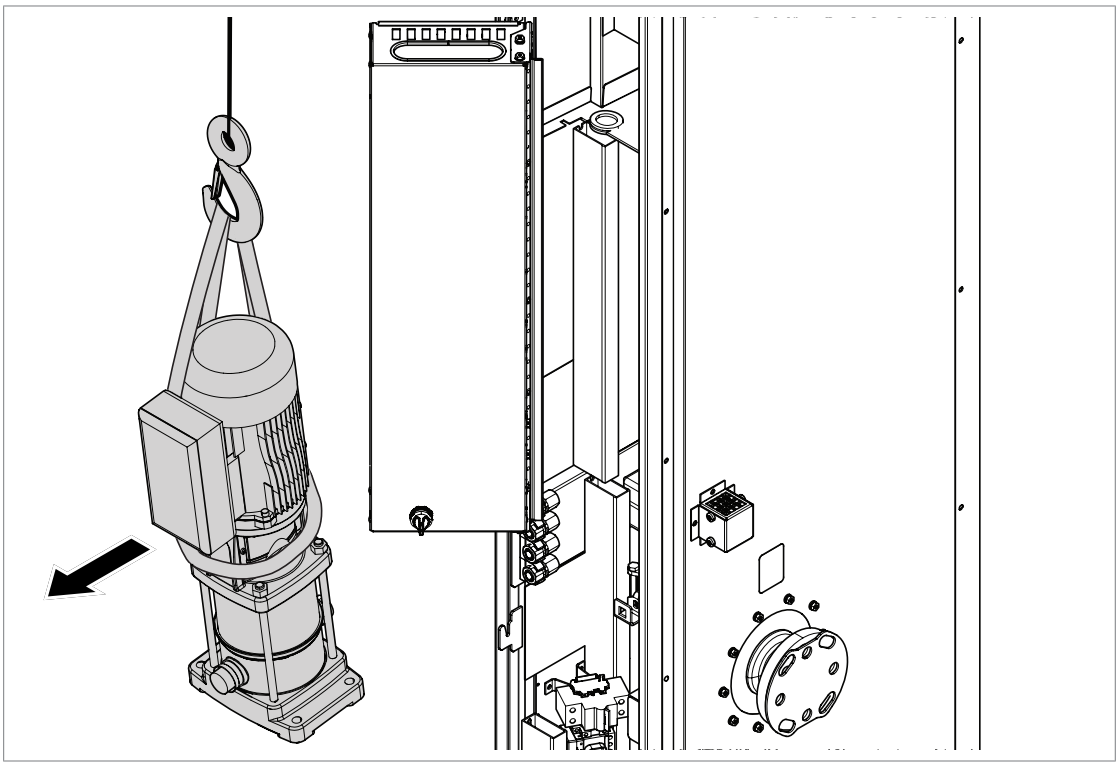

24. Install the new pump unit. Installation is the reverse of removal. When installing rubber seals, use a lubricant that is compatible with the seal and pipe materials.
Tightening torques:
- pipe clamp bolts: 70 N·m (51.6 lbf·ft)
- pump bolts: 70 N·m (51.6 lbf·ft)
- motor electrical connections: refer to the table below.

Bolt size	Tightening torque
M4	1.2 N·m (11 lbf·in)
M5	2.5 N·m (22 lbf·in)
M6	4.0 N·m (35 lbf·in)
M8	8.0 N·m (71 lbf·in)
M10	15.0 N·m (133 lbf·in)

25. Fill and bleed the cooling system. Refer to Adding coolant (page 56) and Bleeding the cooling system (page 58).

WARNING!
Do not operate the pump before you fill and bleed the cooling system. Air in the cooling system can cause damage to the pump seals.

ACS880-1007LC-0195 – Replacing the pump unit

WARNING!
Obey the safety instructions of the drive. If you ignore them, injury or death, or damage to the equipment can occur. If you are not a qualified electrical professional, do not do installation, commissioning or maintenance work.

WARNING!
Use the required personal protective equipment. Wear protective gloves and long sleeves. Some parts have sharp edges.

Use also the required eye, hand and respiratory protection when working with coolant. Refer to the safety data sheet (SDS) for Antifrogen® L coolant by Clariant.

If you do not obey these instructions, injury can occur.

This procedure shows the replacement of one pump unit.

If you cannot easily access all the necessary components inside the cabinet, and there is sufficient free space around the cabinet, you can remove the cabinet rear wall for the duration of the maintenance. You can also partially remove the side wall, but the flanges prevent you from fully removing it.

1. Stop the drive, including the liquid-cooling unit, and do the steps in section Electrical safety precautions (page 37) before you start the work.
2. Open the cabinet door.

3. Remove the eight screws that attach the swing-out frame to the cabinet frame (four on each side).

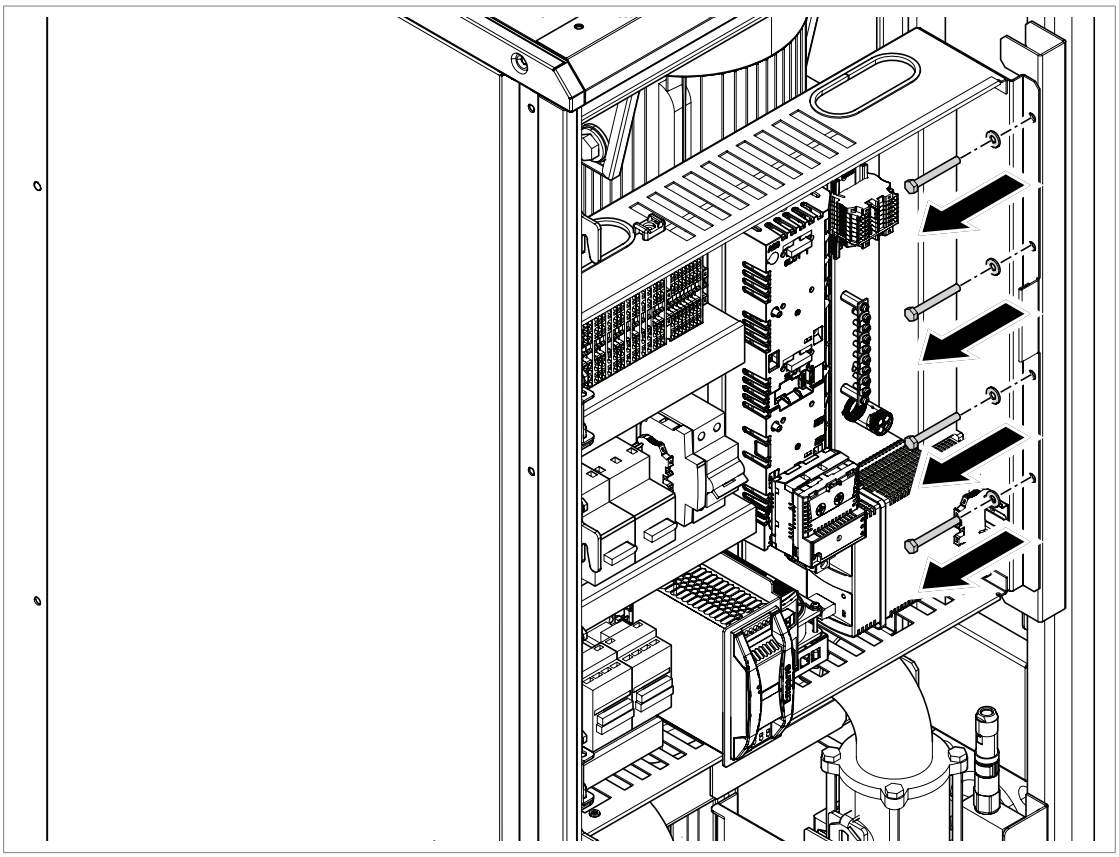

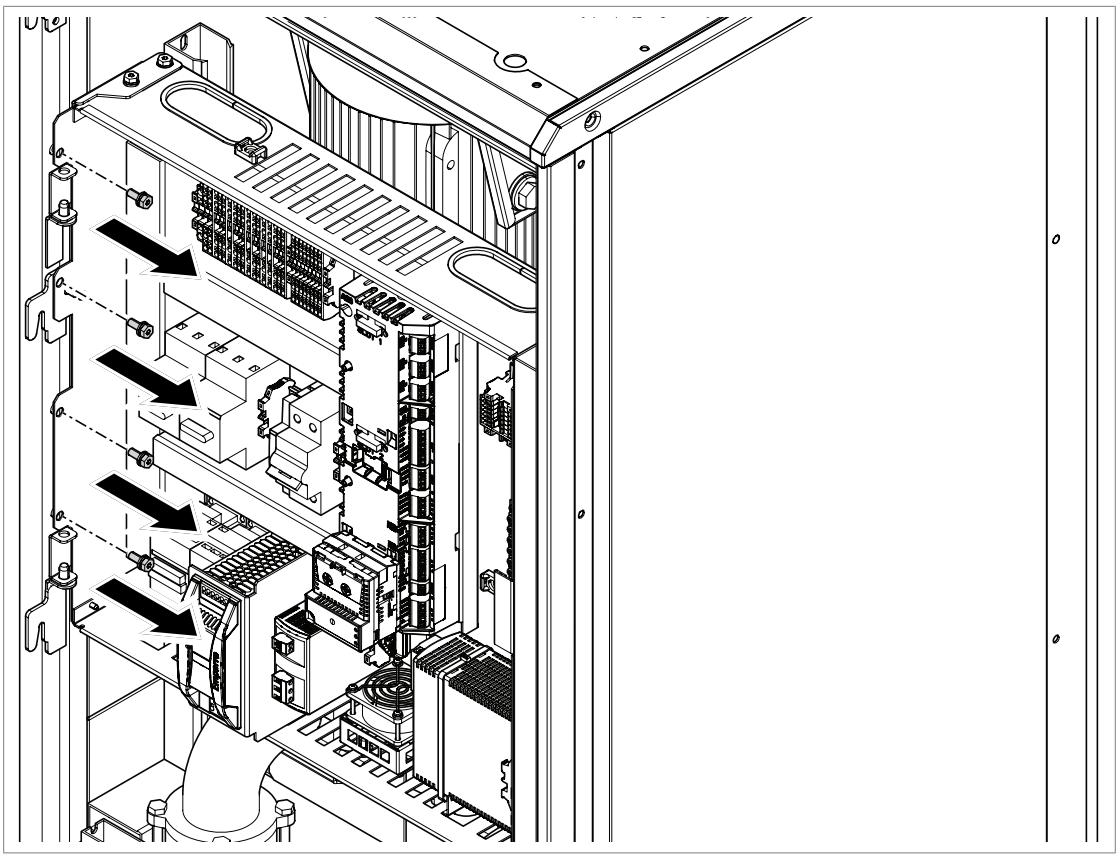

4. Open the swing-out frame.

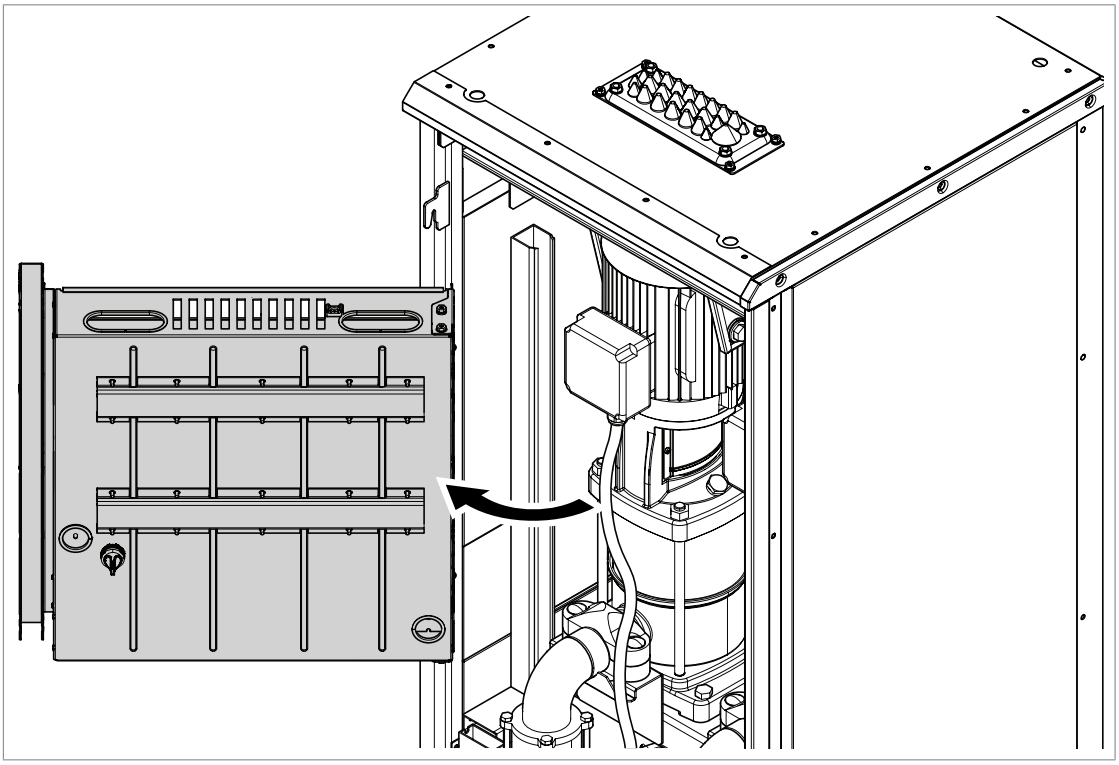

5. Remove the gasket on top of the motor.

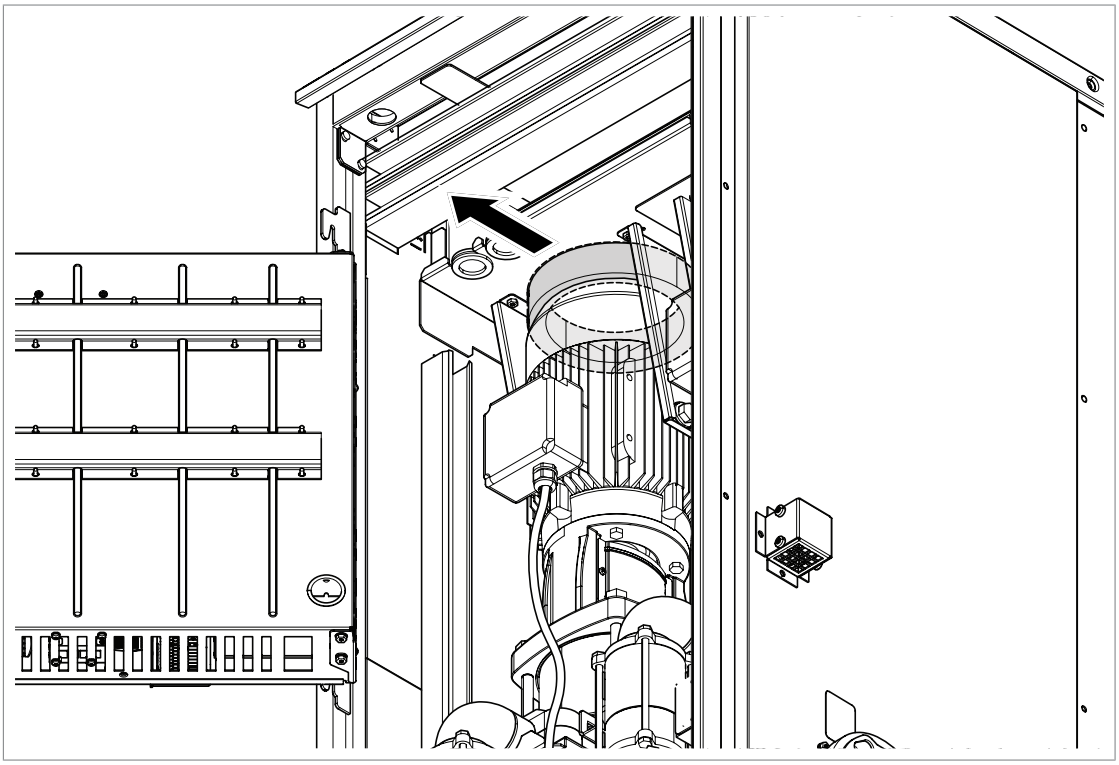

6. Remove the four screws that attach the motor to the cabinet frame (two on each side).

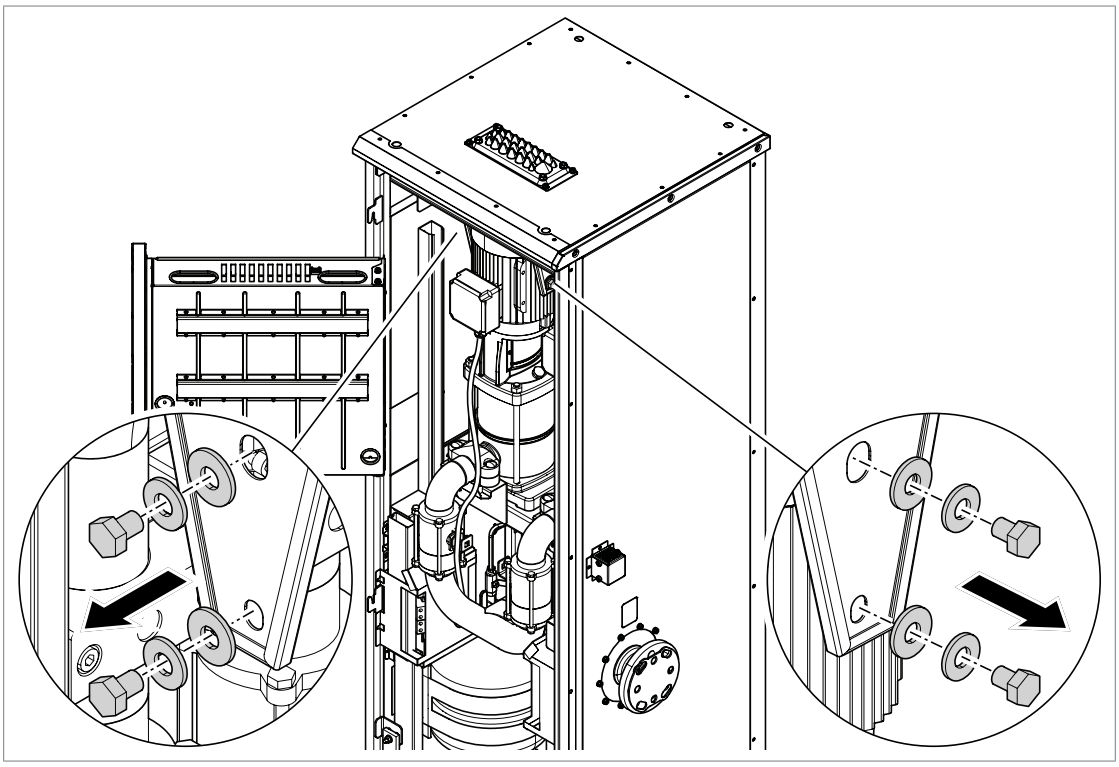

7. Remove the cover from the motor connection box.

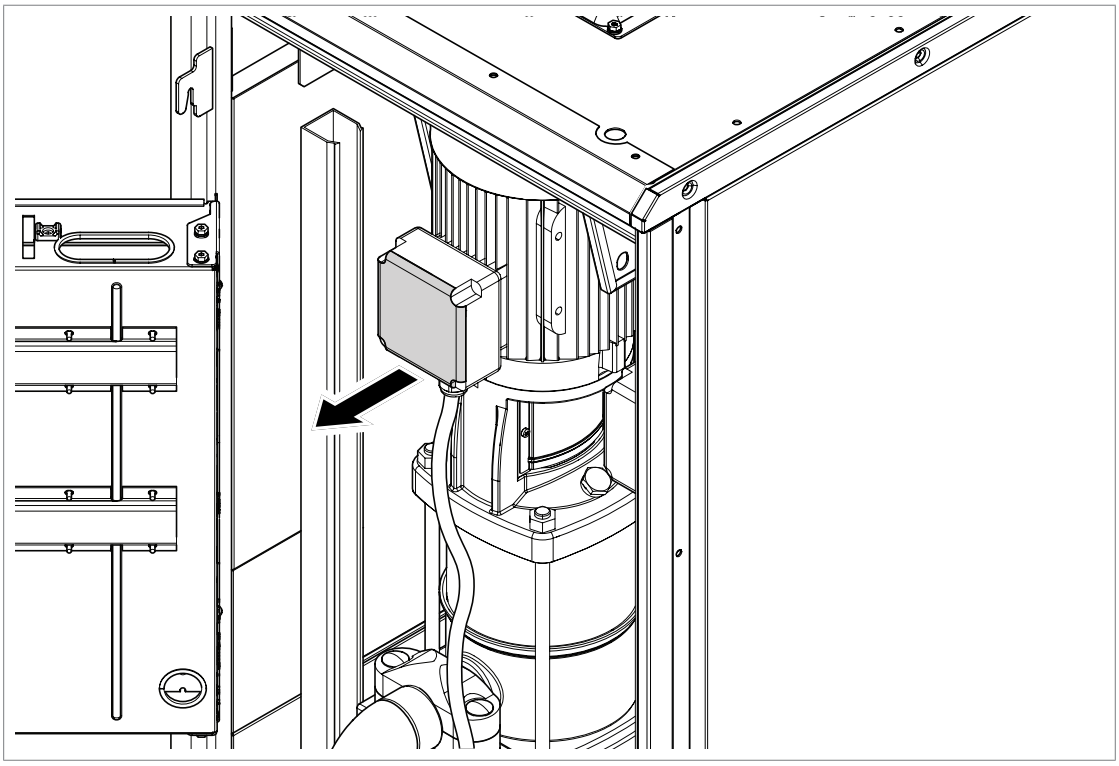

8. Record the connection type (delta or star).

9. Disconnect the conductors from the motor terminals. Pull the supply cable out and move it out of the way.

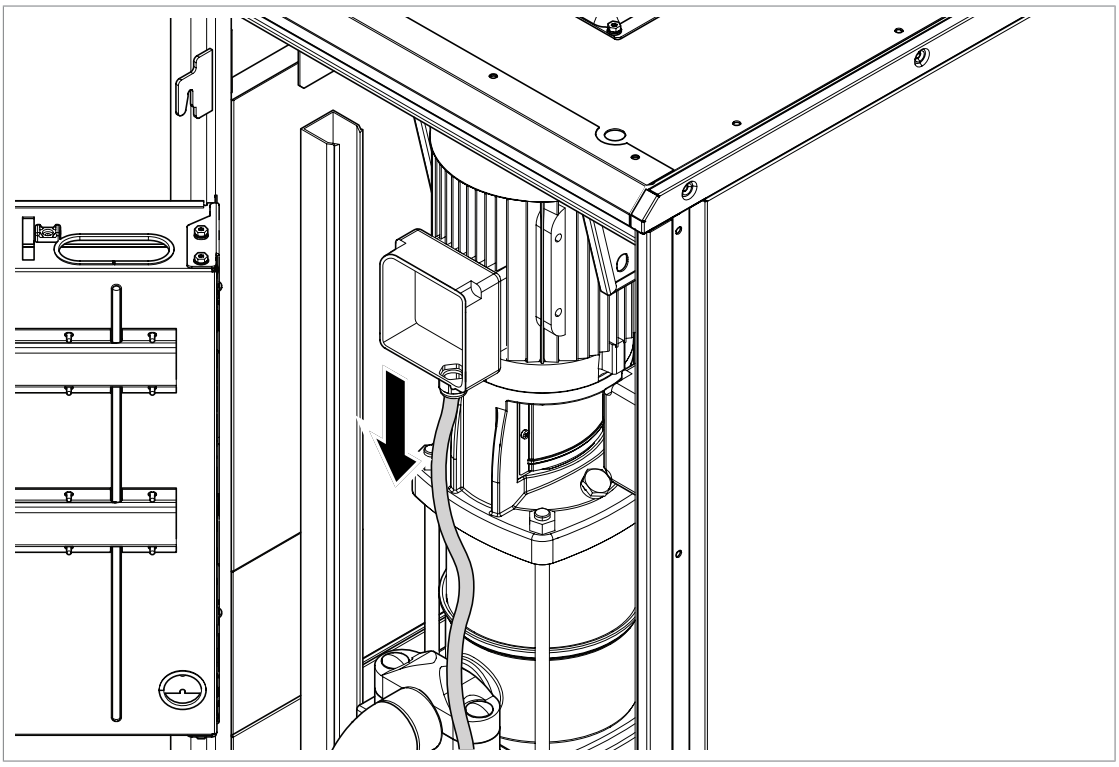

10. Connect the drain hoses to the two drain/fill valves (V0010, V0012). Put the other end of the hoses into a bucket. Secure the hoses to prevent coolant spills caused by the possible movement of the hoses during depressurization. The drain hoses are included in the cooling unit delivery.

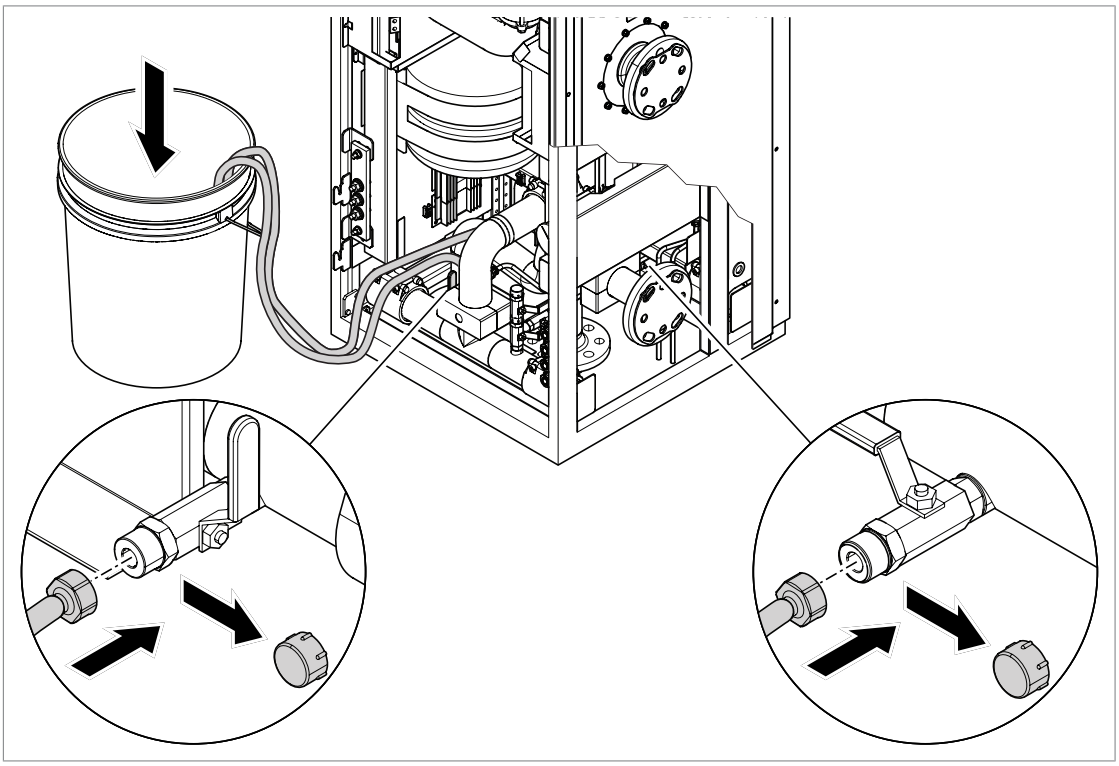

11. Open the drain/fill valves (V0010, V0012) momentarily to release the pressure from the system.

WARNING!
Open the valves carefully. The system is pressurized (2.5 bar [36 psi]).

Note: It is not necessary to fully drain the unit.

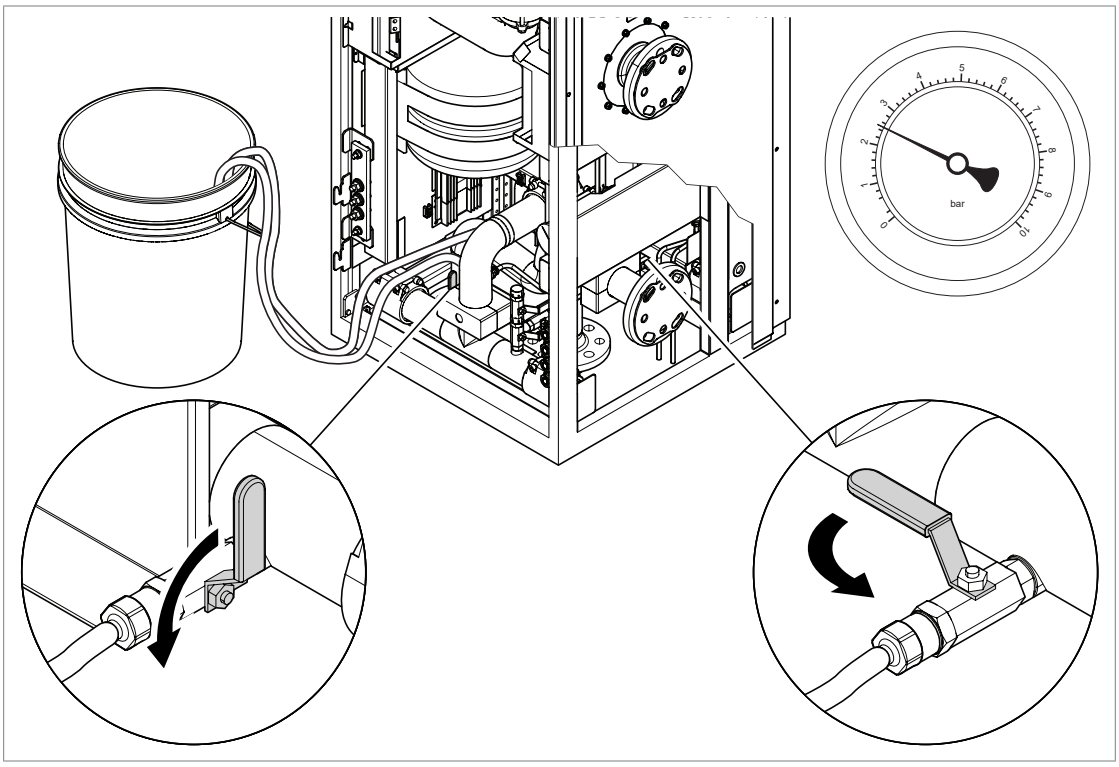

12. Close the drain valves when the coolant pressure gauge (PI-203) shows zero. Remove the drain hoses.

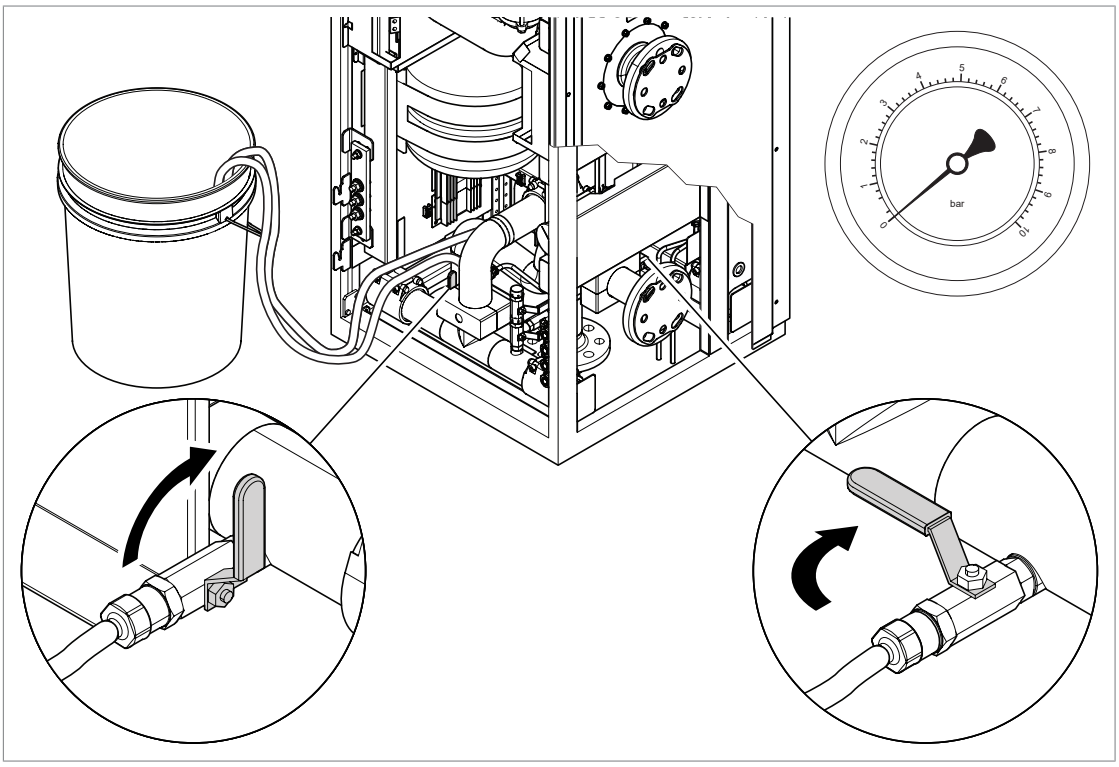

13. Close the applicable pump shut-off valves (V0004, V0006 or V0005, V0007) with a ½” wrench or square head socket.

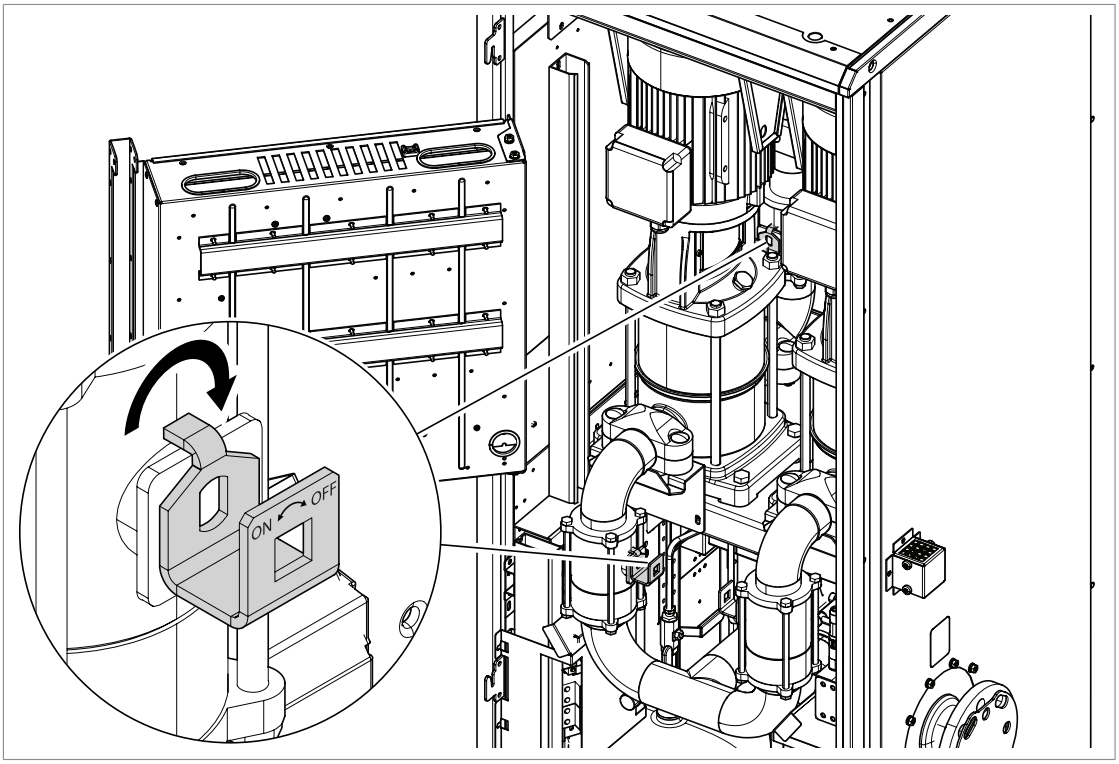

14. Remove the bolts that keep the pipe clamps together (two on each clamp).

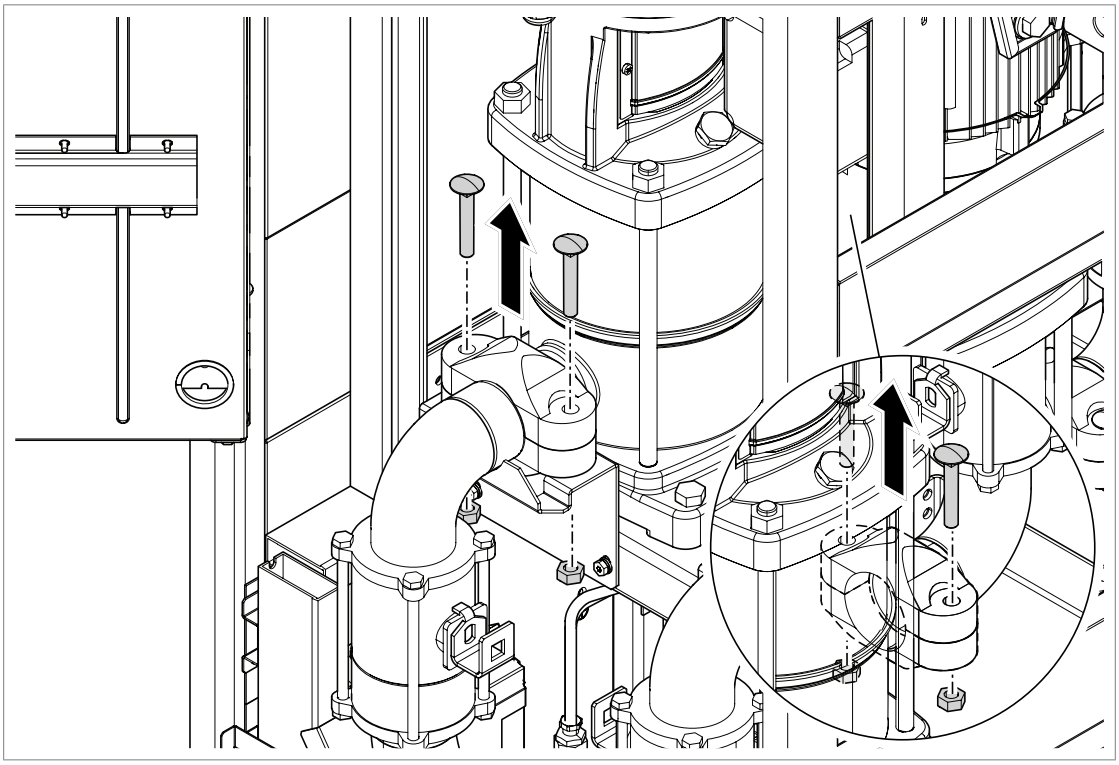

15. Remove the pipe clamp upper parts.

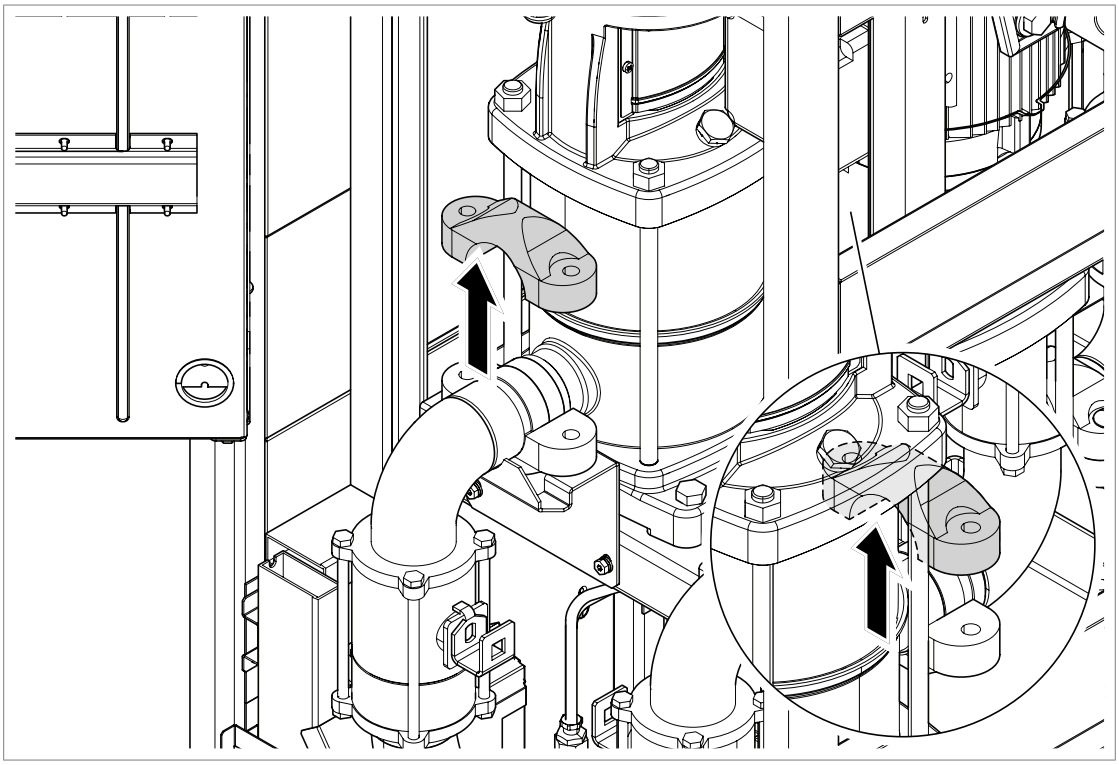

16. Remove the pipe clamp support brackets.

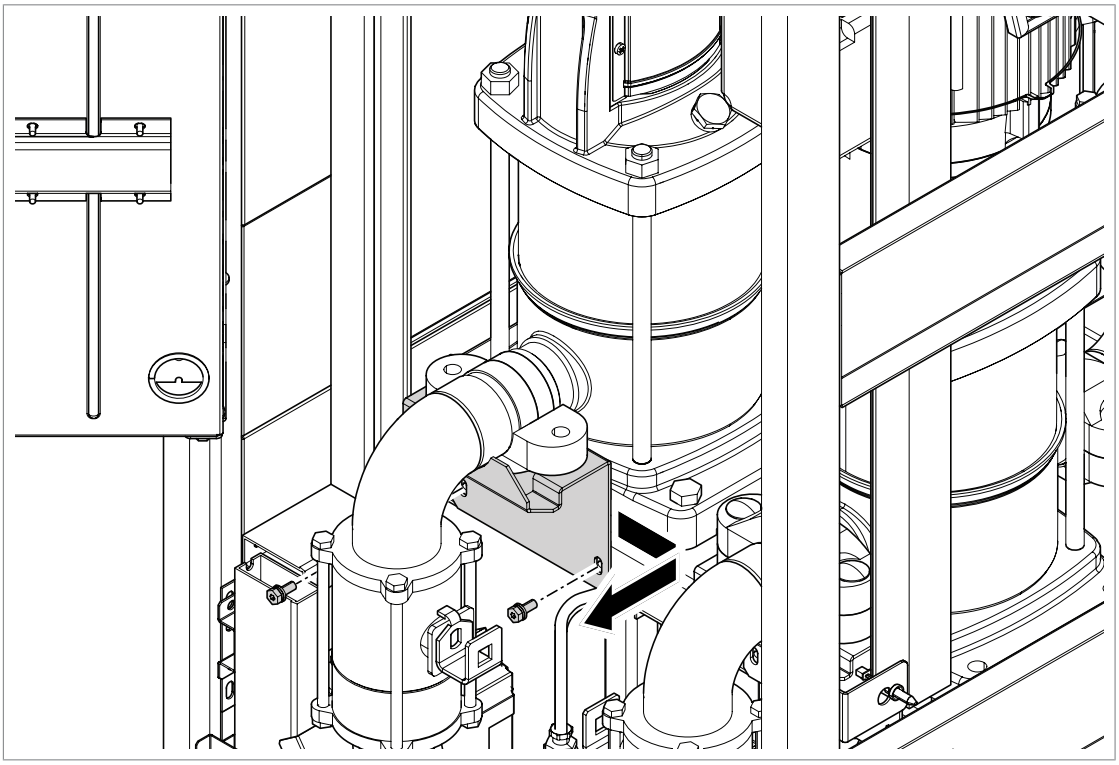

17. Remove the pipe clamp lower parts.

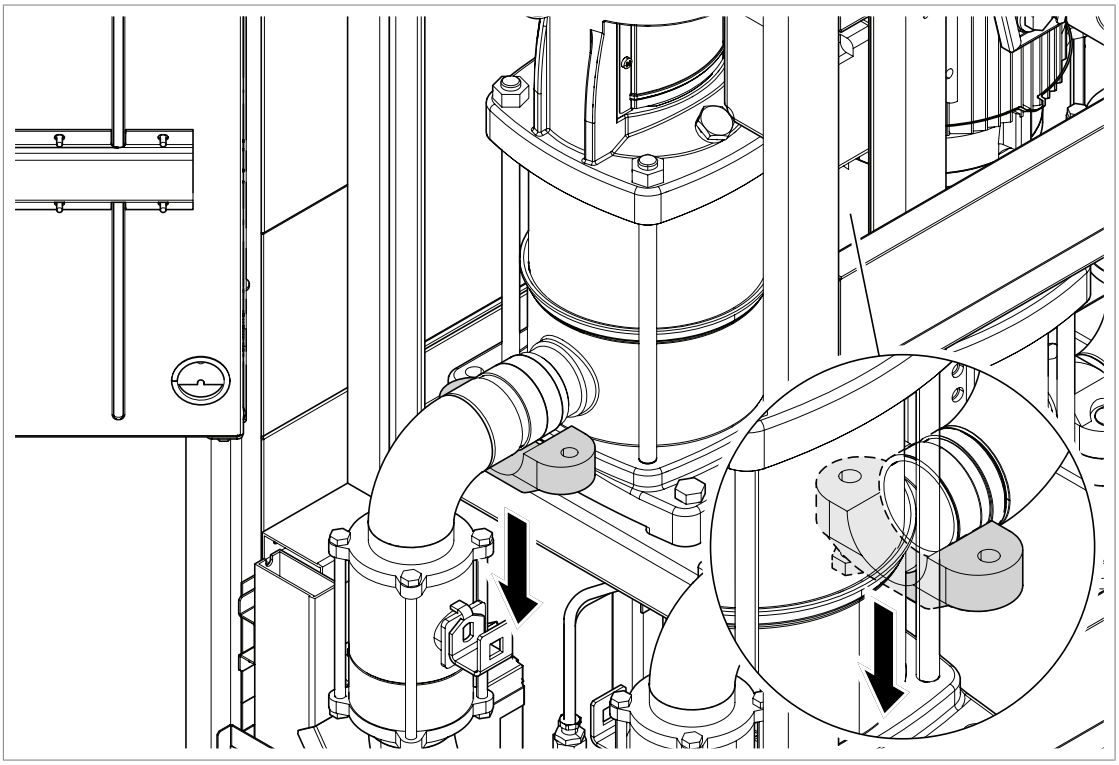

18. Get two drain boxes and connect a drain hose to each box. The drain boxes are included in the cooling unit delivery.

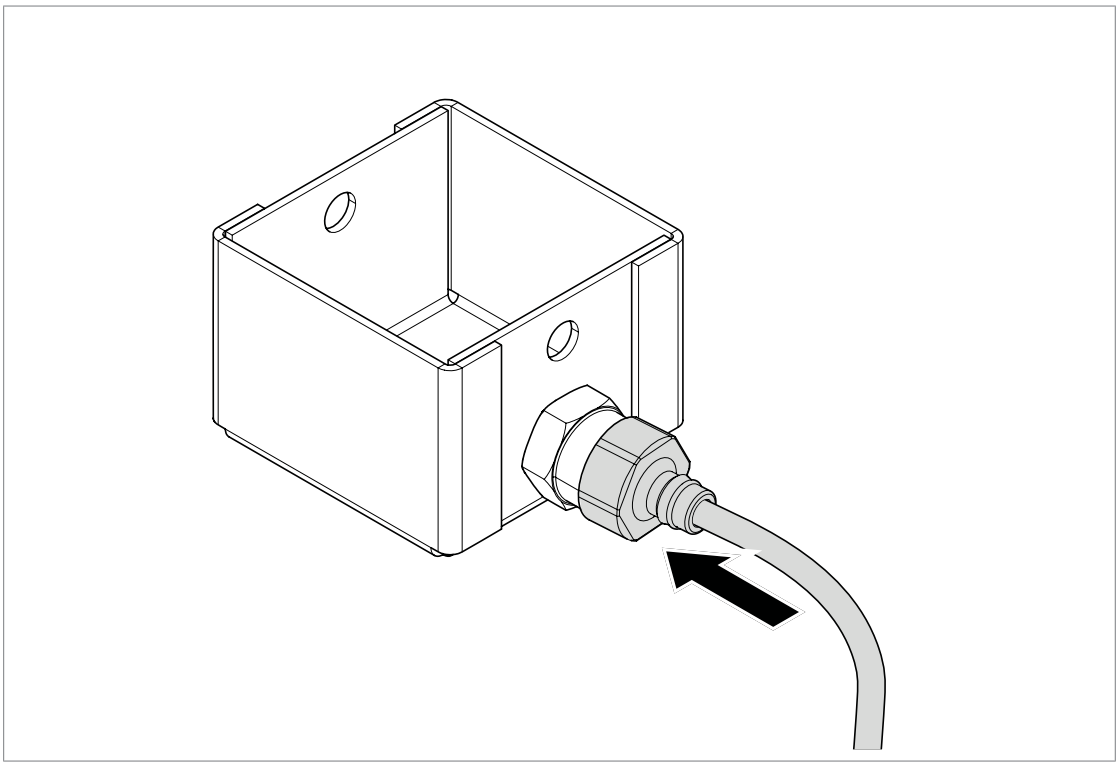

19. Attach the drain boxes below the rubber seals with cable ties. Put the other end of the drain hoses into a bucket.

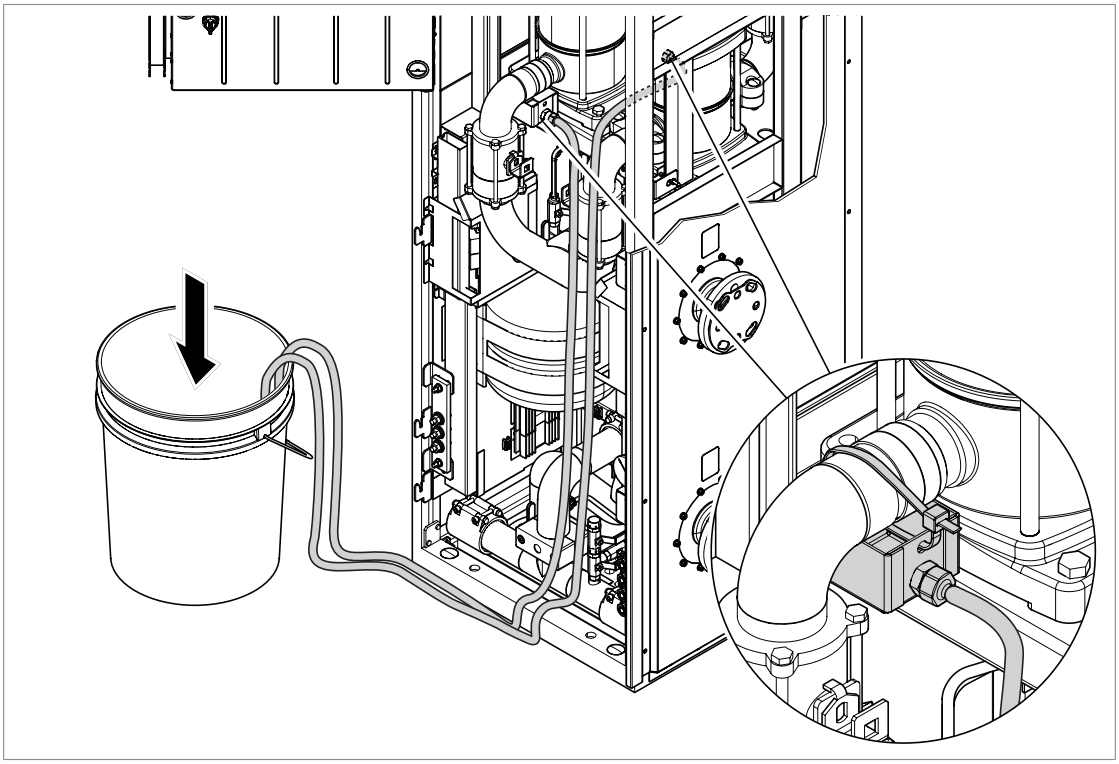

20. Remove the rubber seals and drain the coolant into the drain boxes.

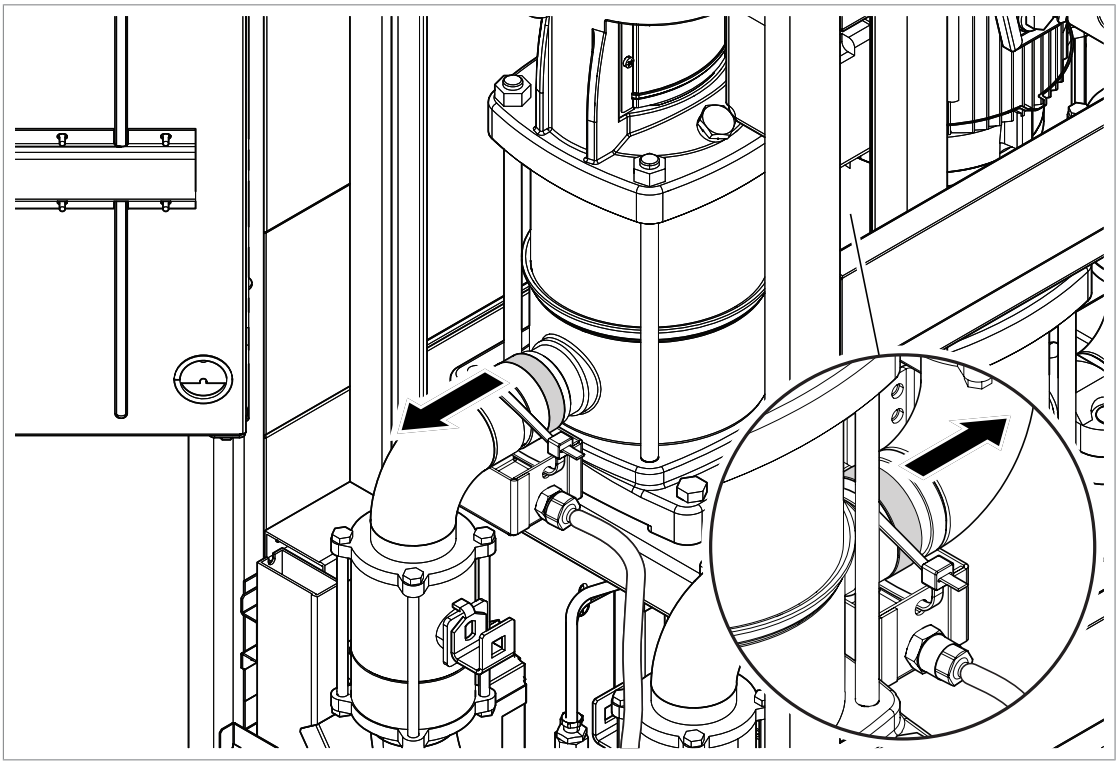

21. Attach a lifting device to the pump unit.

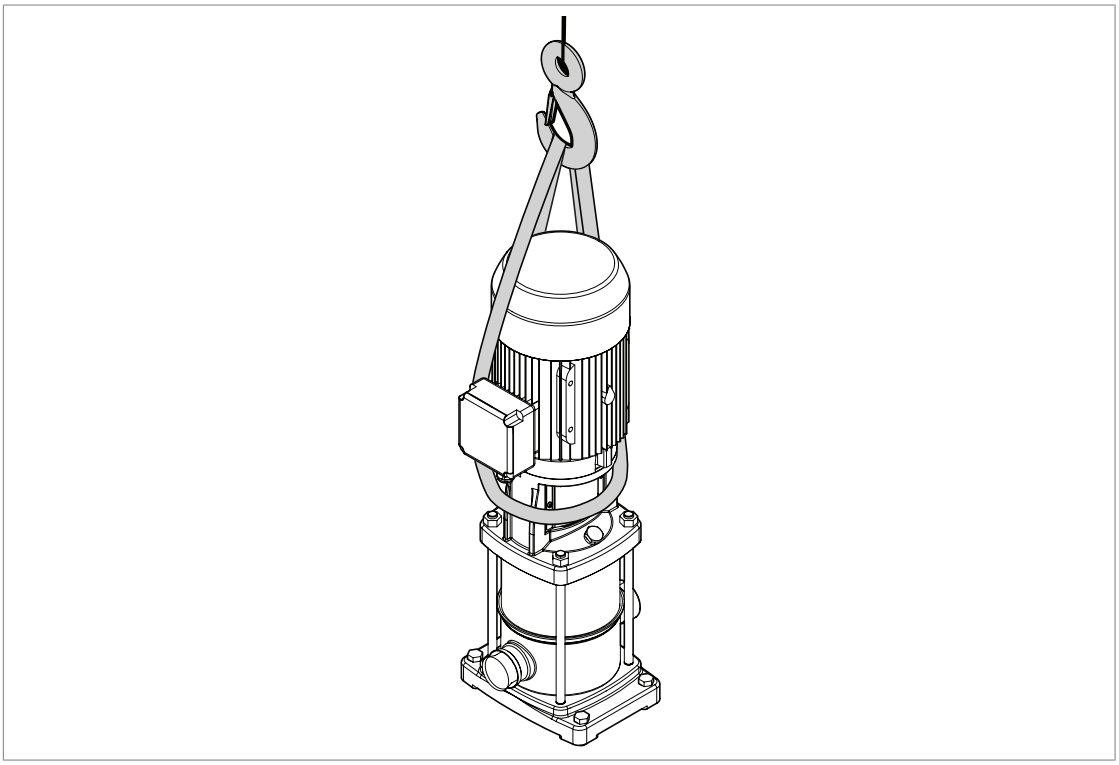

22. Remove the four bolts that attach the pump unit to the cabinet frame.

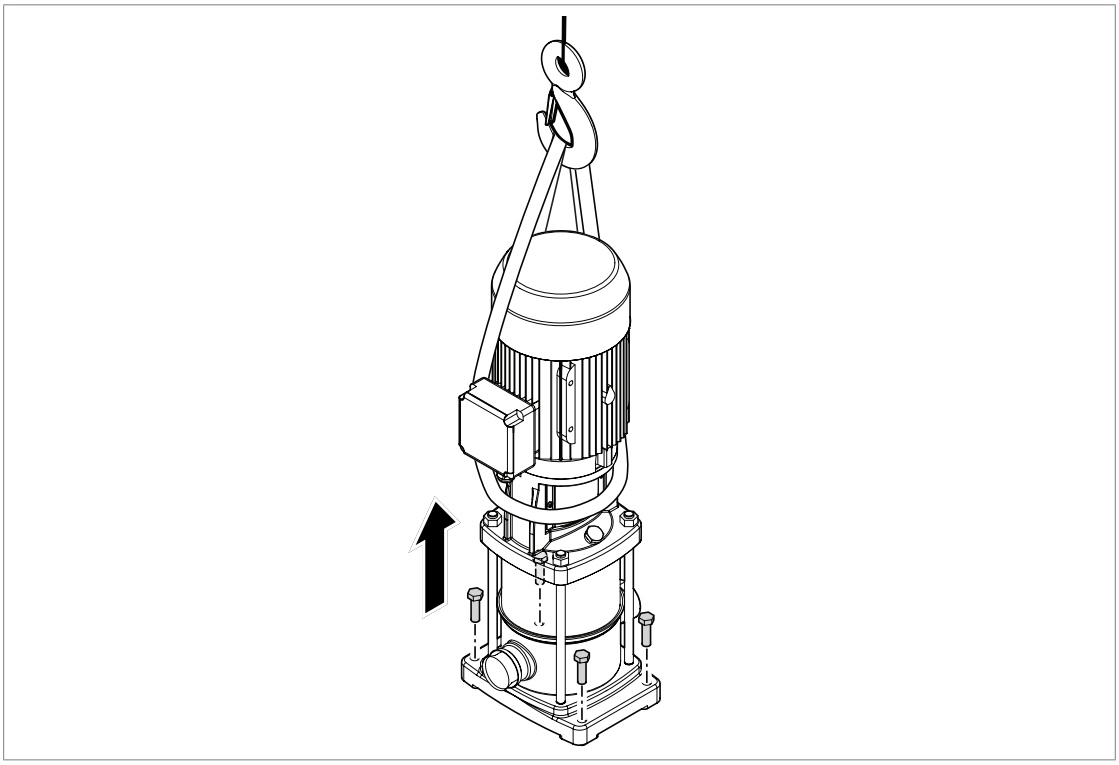

23. Use the lifting device to lift the pump unit out of the cabinet.

WARNING!
Make sure that the lifting device is safely attached to the pump unit. Be careful when you lift the pump unit. The pump unit is heavy. If it accidentally moves or falls, injury to personnel or damage to the equipment can occur.

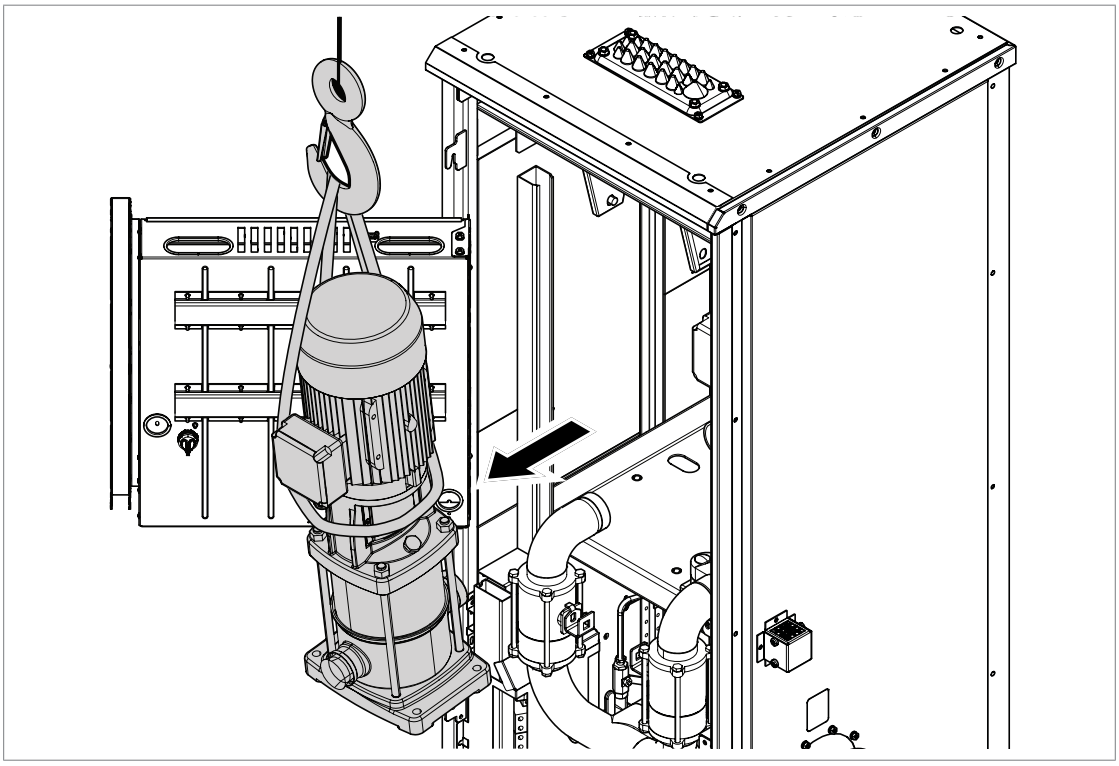

24. Install the new pump unit. Installation is the reverse of removal. When installing rubber seals, use a lubricant that is compatible with the seal and pipe materials. Tightening torques:
    - pipe clamp bolts: 70 N·m (51.6 lbf·ft)
    - pump bolts: 70 N·m (51.6 lbf·ft)
    - motor electrical connections: refer to the table below.

Bolt size	Tightening torque
M4	1.2 N·m (11 lbf·in)
M5	2.5 N·m (22 lbf·in)
M6	4.0 N·m (35 lbf·in)
M8	8.0 N·m (71 lbf·in)
M10	15.0 N·m (133 lbf·in)

25. Fill and bleed the cooling system. Refer to Adding coolant (page 56) and Bleeding the cooling system (page 58).

WARNING!
Do not operate the pump before you fill and bleed the cooling system. Air in the cooling system can cause damage to the pump seals.

ACS880-1007LC-0070 – replacing the swing-out frame cooling fan

WARNING!
Obey the safety instructions of the drive. If you ignore them, injury or death, or damage to the equipment can occur. If you are not a qualified electrical professional, do not do installation, commissioning or maintenance work.

WARNING!
Use the required personal protective equipment. Wear protective gloves and long sleeves. Some parts have sharp edges.

1. Stop the drive and do the steps in section Electrical safety precautions (page 37) before you start the work.
2. Open the cabinet door.
3. Locate the fan [G210] in the swing-out frame. See the layout drawing.
4. Loosen the screws that attach the fan assembly to the frame.
5. Remove the fan assembly and disconnect the power supply cable.
6. Remove the screws that attach the fan to the grating and the base.
7. Install a new fan in reverse order.

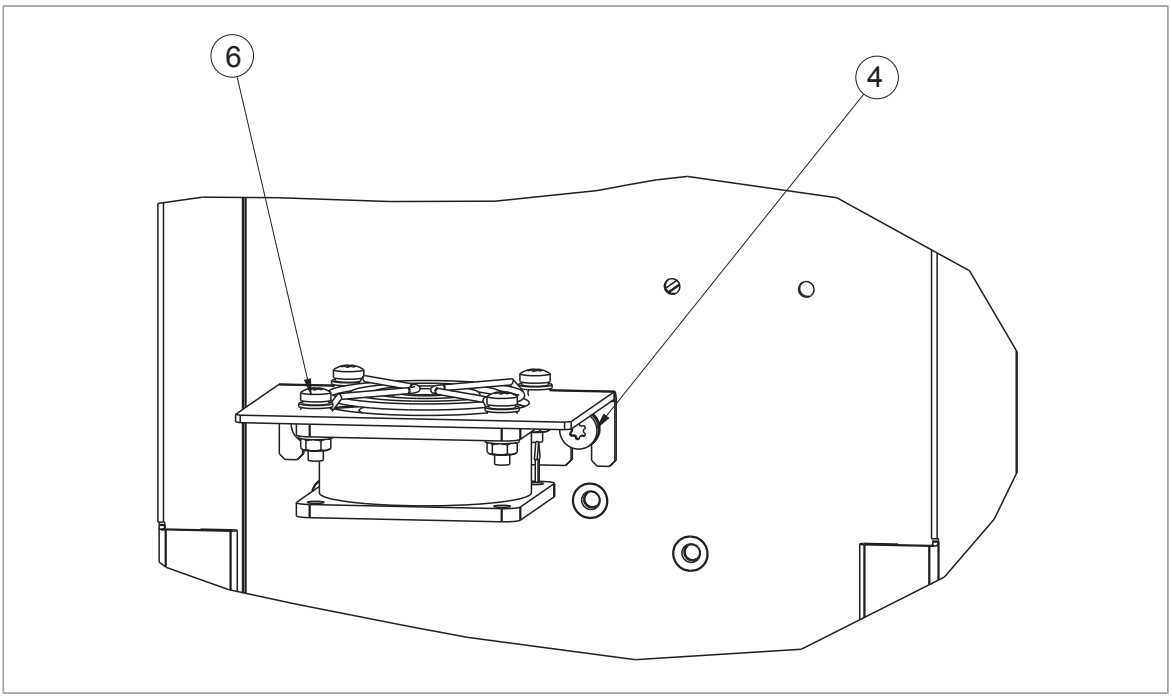

ACS880-1007LC-0195 – replacing the swing-out frame cooling fan

WARNING!
Obey the safety instructions of the drive. If you ignore them, injury or death, or damage to the equipment can occur. If you are not a qualified electrical professional, do not do installation, commissioning or maintenance work.

WARNING!
Use the required personal protective equipment. Wear protective gloves and long sleeves. Some parts have sharp edges.

1. Stop the drive and do the steps in section Electrical safety precautions (page 37) before you start the work.
2. Open the cabinet door.
3. Locate the fan [G210] at the bottom of the swing-out frame. See the layout drawings.
4. Remove the screws that attach the fan assembly to the frame.
5. Pull the fan assembly out a small distance and disconnect the power supply cable.
6. Remove the screws that attach the fan to the grating and the base.
7. Install a new fan in reverse order.

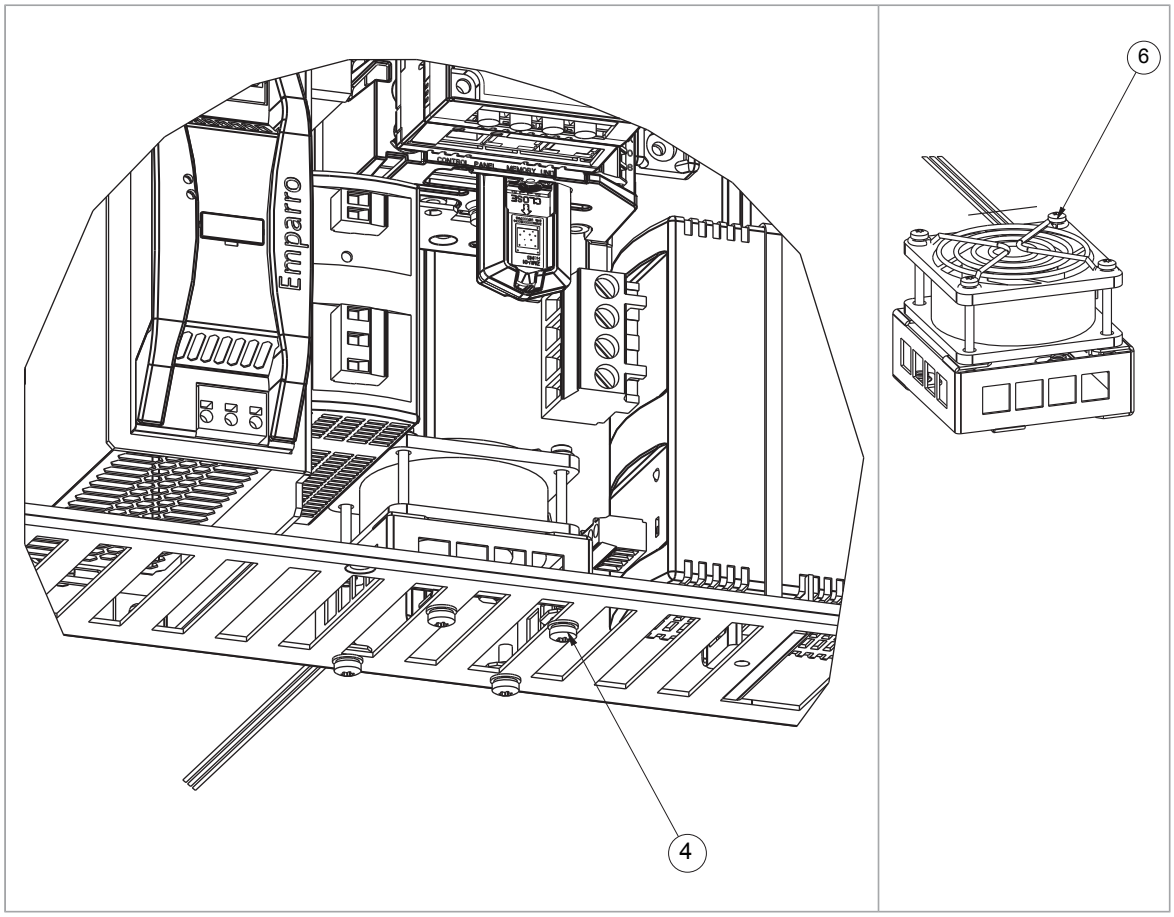

8

Program features

Contents of this chapter

This chapter describes the features of the control program.

Basics

The cooling unit (LCU) controls the circulation in the internal cooling circuit by switching the pump on and off. During normal operation of the drive, the pump runs constantly. The control program stops the pump in these conditions:

- it receives a stop command
- the pump alternation function stops one pump and starts the other in a two-pump system
- the control program detects a fault, for example:
  - low inlet pressure
  - incorrect pressure or leakage in the internal cooling circuit.
- motor protective circuit breakers of all pumps have tripped (or are opened by the user)
- the XSTO circuit on the control unit is open (jumper wire is not connected).

Start/stop control, and reset

See Control interfaces (page 27).

Settings and diagnostics

Parameters: 20.03.

Events: Not applicable.

Pump control

Basic operation

The control program energizes or de-energizes the pump motor(s) through the relay outputs as follows:

- RO1 controls the contactor of pump motor 1
- RO2 controls the contactor of pump motor 2 (only in a two-pump cooling unit).

The auxiliary contacts of the motor protective circuit breakers are connected to the digital inputs as follows:

- DI1 monitors pump motor 1
- DI2 monitors pump motor 2 (only in a two-pump cooling unit).

The user cannot change these settings.

In a two-pump cooling unit:

- one pump is operating at the time (if option +C213 is selected, both pumps operate at the same time)
- the control program alternates pumps automatically as standard. The user can disable the alternation function with parameter 20.01, and select which pump to use with parameter 20.02.
- the user can disconnect one pump from the system, or the control program can do it if there is a failure. The cooling unit continues to operate with the remaining pump.

Alternation

In a two-pump cooling unit, the control program alternates the pump in duty automatically. The alternation reduces the wear of an individual pump.

The pump alternation function is active when parameter 20.01 is set to value **Auto** and parameter 20.04 is set to value **2 Pumps**. The user can adjust the pump operation times with parameters 20.05 and 20.06.

Redundancy

In a two-pump cooling unit (without option +C213), only one pump runs at the time. Because of this, the unit can continue operation when there is a pump failure. The cooling unit detects when the protective circuit breaker of a pump motor is open. It will not try to start that pump, but operates the other pump until it is possible to return to normal two-pump operation with alternation. To enable redundancy, parameter 20.01 must be set to value **Auto**.

Two pumps running

A two-pump cooling unit can be ordered with option +C213 (Two pumps running). The option is intended for large drive line-ups that require very high mass flow in the internal cooling circuit, which cannot be supplied by one pump only. The option includes an additional cooler in the cooling unit cabinet to compensate the extra losses, and the activation of the Two pumps running function in the control program.

The **Two pumps running** function has two possible operation modes: normal or reduced. When the reduced mode is in use, the cooling unit can continue with a partial load using one pump only if the other pump fails.

The function is activated by a parameter at the factory by ABB. The parameter also selects the operation mode for the function. For more information, contact ABB.

Standby

The Standby function is useful in applications where the drive and the cooling unit are stopped for long periods of time. A long non-operational standby time will dry the pump, which can cause damage to the seals or bearings.

When the Standby function is active, the control program runs the pump automatically in user-defined cycles. The user can activate the Standby function with parameter 20.08. The running time of the pump(s) is set with parameter 20.07 and the delay time with parameter 20.09. In a two-pump cooling unit, the pumps are run one at a time, and the running time of a single pump is half of the total running time defined by parameter.

Delayed cooling

The user activates the Delayed cooling function by defining a stop delay with parameter 20.07. When the control program receives the stop command, it keeps the pump running for the stop delay time.

Pressure monitoring functions

The pressure monitoring functions supervise:

- the inlet pressure vs. user-defined minimum limit, and sensor status
- the outlet pressure vs. user-defined maximum limit, and sensor status
- the pressure difference vs. user-defined minimum limit
- the pressure monitoring delay.

If a function detects that the pump pressure is out of the range, it generates a warning, or trips the unit on a fault. The user can define the warning and fault limits. For the outlet pressure monitoring there is only a warning limit. For the pressure difference monitoring function, there is a resetting parameter: the user must reset the function after a fault trip before a pump restart is possible.

If a function detects that a sensor is faulty, or not connected, it generates a warning.

Operation of the Pressure difference monitoring function

When the pressure difference goes below the warning limit, the function generates a warning (Pressure difference low). If the pressure difference keeps decreasing and goes below the fault limit, the one-pump cooling unit trips on a fault. The two-pump unit tries a pump change as follows:

1. The function checks if the control mode selection (parameter 20.01) permits the automatic pump alternation:
   - If yes, the function changes the pump in duty automatically (that is, stops the pump in use, and starts the other pump), and continues to step 2.
   - If not, the function trips the unit on a fault (Pumps failed), and the cooling unit stops. The user can start the unit only after repairing the pump, resetting

the cooling unit, and resetting the pressure difference monitoring function (31.20).

2. If the control mode selection (parameter 20.01) permitted the pump change, the function keeps monitoring the pressure difference a few seconds, and then decides on the next steps:
   - If the pressure difference goes back to normal, the function considers the stopped pump to be damaged. The cooling unit continues the operation with one pump only. The Alternation function does not try to use the damaged pump, and the warning remains active. The cooling unit goes back to normal two-pump operation only after the user has repaired the damaged pump and reset the pressure difference monitoring function (31.20).
   - If the pressure difference stays below the fault limit, the function trips the unit on a fault (Pumps failed), and the cooling unit stops. The user can start the unit only after repairing the pumps, resetting the cooling unit, and resetting the pressure difference monitoring function (31.20).

Settings and diagnostics

Parameters: 20.01, 31.01, 31.02, 31.03, 31.04, 31.05, 31.06, 31.07, 31.20.

Events: Inlet pressure, Outlet pressure, Pressure difference low, Inlet pressure, Pressure difference, Inlet pressure sensor, Outlet pressure sensor.

Temperature monitoring functions

The temperature monitoring functions supervise:

- the coolant temperature level and sensor status
- the internal temperature level (inside the cooling unit cabinet) and sensor status
- the ambient temperature level (outside the cooling unit cabinet) and sensor status.

If a function detects a temperature that is out of the range, or a faulty or not connected sensor, it generates a warning. The user can define:

- minimum and maximum limits for the coolant temperature monitoring
- maximum limit for the internal temperature monitoring
- minimum and maximum limits for the ambient temperature monitoring.

Settings and diagnostics

Parameters: 31.09, 31.10, 31.11, 31.12, 31.13

Events: Coolant temperature below limit, Coolant overtemperature, Coolant temperature sensor, Cabinet overtemperature, Cabinet temperature sensor, Ambient temperature below limit, Ambient overtemperature, Ambient temperature sensor

Leakage monitoring function

The leakage monitoring function supervises the leakage sensor on the bottom of the cooling unit. If the sensor indicates a leakage, the function generates a warning, or trips the unit on a fault. User can define the action, and the delay time for it.

Settings and diagnostics

Parameters: 31.06, 31.07

Events: Coolant leakage (warning), Coolant leakage (fault)

2-way control valve function

A 2-way control valve (option +C242) is available for the cooling unit. Using the valve, the cooling unit can control the flow in the external cooling circuit, and the heat exchanger cooling capacity.

The control program includes a specific function for the 2-way control valve. The function monitors the temperature of the internal circuit coolant after the heat exchanger, and adjusts the control valve position to keep the temperature at the constant reference value of 26 °C (79 °F). This reference value cannot be adjusted by the user. However, for special cases, the user can activate **Follow ambient mode** (parameter 22.20). Then the coolant temperature reference is not a constant value but it follows the measured ambient temperature when the temperature is within a certain temperature range. This feature helps in preventing condensation in warm and humid conditions.

For more information, see the layout drawings, piping and instrumentation diagrams, circuit diagrams, related parameters and start-up.

Settings and diagnostics

Parameters: 22 Coolant temperature control

Events: Valve control limit (warning)

Miscellaneous

User lock

For better cybersecurity, it is highly recommended that you set a master pass code to prevent, for example, the changing of parameter values and loading of firmware and other files.

WARNING!
ABB will not be liable for damages or losses caused by the failure to activate the user lock using a new pass code. See Cybersecurity disclaimer (page 162).

To activate the user lock for the first time,

- Enter the default pass code 10000000 into parameter 96.02. This will make parameters 96.100…96.102 visible.
- Enter a new pass code into parameter 96.100. Always use eight digits. If using Drive Composer, finish with Enter.
- Confirm the new pass code with parameter 96.101.

  WARNING!
  Keep the pass code in a safe place. ABB cannot open the user lock if the pass code is lost.

- Select the actions that the user lock prevents with parameter 96.102. ABB recommends that you select all the actions, unless otherwise required by the application.

- Enter an incorrect pass code into 96.02.
- Reboot the control unit. You can use parameter 96.08 to reboot the control unit.
- Make sure that parameters 96.100…96.102 are hidden. If they are not hidden, enter a different pass code into parameter 96.02.

To open the lock, enter your pass code into parameter 96.02. This will make parameters 96.100…96.102 visible.

9

Parameters

Contents of this chapter

The chapter describes the parameters, including actual signals, of the control program.

Terms and abbreviations

Term	Definition
Actual signal	Type of parameter that is the result of a measurement or calculation by the control program, or contains status information. Most actual signals are read-only, but some (especially counter-type actual signals) can be reset.
Def	(In the following table, shown on the same row as the parameter name). The default value of a parameter.
FbEq16	(In the following table, shown on the same row as the parameter range, or for each selection) 16-bit fieldbus equivalent: The scaling between the value shown on the panel and the integer used in communication when a 16-bit value is selected for transmission to an external system. A dash (-) indicates that the parameter is not accessible in 16-bit format.
Other	The value is taken from another parameter. Choosing "Other" displays a parameter list in which the user can specify the source parameter. **Note:** The source parameter must be a 32-bit real (floating point) number. To use a 16-bit integer (for example, received from an external device in data sets) as the source, data storage parameters can be used.
Other [bit]	The value is taken from a specific bit in another parameter. Choosing "Other" displays a parameter list in which the user can specify the source parameter and bit.
Parameter	User-adjustable operating instruction for the control program, or an actual signal.
p.u.	Per unit

Summary of parameter groups

Group	Contents
01 Actual values	Basic signals for monitoring the unit.
04 Warnings and faults	Information on warnings and faults that occurred last.
06 Control and status words	Control and status words.
07 System info	Firmware information.
15 I/O extension module 2	I/O extension module 2 settings.
16 I/O extension module 3	I/O extension module 3 settings.
20 LCU control	Cooling unit control and settings.
22 Coolant temperature control	Control of the coolant temperature in external cooling circuit.
31 Fault functions	Configuration of external events, selection of behavior of the drive upon fault situations.
47 Data storage	Data storage parameters that can be written to and read from using other parameters' source and target settings.
49 Panel port communication	Communication settings for the control panel port on the drive.
50 Fieldbus adapter (FBA)	Fieldbus communication configuration.
51 FBA A settings	Fieldbus adapter A configuration.
52 FBA A data in	Selection of data to be transferred from drive to fieldbus controller through fieldbus adapter A.
53 FBA A data out	Selection of data to be transferred from fieldbus controller to drive through fieldbus adapter A.
54 FBA B settings	Fieldbus adapter B configuration.
55 FBA B data in	Selection of data to be transferred from drive to fieldbus controller through fieldbus adapter B.
56 FBA B data out	Selection of data to be transferred from fieldbus controller to drive through fieldbus adapter B.
60 DDCS communication	DDCS communication configuration.
61 D2D and DDCS transmit data	Defines the data sent to the DDCS link.
62 D2D and DDCS receive data	Mapping of data received through the DDCS link.
96 System	Language selection, access levels, macro selection, parameter save and restore, control unit reboot, user parameter sets, unit selection.

01 Actual values

No.	Name/Value	Description	Def/FbEq16
01 Actual values		Basic signals for monitoring the unit.	
01.01	Inlet pressure	Shows the coolant inlet pressure for pump(s).	0.0 bar
	0.0 … 10.0 bar	Pressure	1000 = 1 bar
01.02	Outlet pressure	Shows the outlet pressure for pump(s).	0.0 bar
	0.0 … 10.0 bar	Pressure	1000 = 1 bar
01.03	Pressure difference	Shows the pressure difference over inlet and outlet.	0.0 bar
	0.0 … 10.0 bar	Pressure	1000 = 1 bar
01.21	Cabinet temperature	Shows the measured cabinet temperature.	0.0 °C
	-40.0 … 120.0 °C	Temperature	100 = 1 °C
01.22	Ambient temperature	Shows the cabinet ambient temperature.	0.0 °C
	-40.0 … 120.0 °C	Temperature	100 = 1 °C
01.23	Coolant int temperature	Shows the coolant temperature in the internal cooling circuit.	0.0 °C
	-10.0 … 60.0 °C	Temperature	100 = 1 °C
01.24	Coolant ext temperature	Shows the coolant temperature in the external cooling circuit.	0.0 °C
	-10.0 … 60.0 °C	Temperature	100 = 1 °C

04 Warnings and faults

No.	Name/Value	Description	Def/FbEq16
04 Warnings and faults		Information on warnings and faults that occurred last. All parameters in this group are read-only unless otherwise noted.	
04.01	Tripping fault	Shows the code of the 1st active fault (the fault that caused the current fault trip).	-
	0000h…FFFFh	1st active fault.	1 = 1
04.02	Active fault 2	Shows the code of the 2nd active fault.	-
	0000h…FFFFh	2nd active fault.	1 = 1
04.03	Active fault 3	Shows the code of the 3rd active fault.	-
	0000h…FFFFh	3rd active fault.	1 = 1
04.04	Active fault 4	Shows the code of the 4th active fault.	-
	0000h…FFFFh	4th active fault.	1 = 1
04.05	Active fault 5	Shows the code of the 5th active fault.	-
	0000h…FFFFh	5th active fault.	1 = 1
04.06	Active warning 1	Shows the code of the 1st active warning.	-
	0000h…FFFFh	1st active warning.	1 = 1
04.07	Active warning 2	Shows the code of the 2nd active warning.	-
	0000h…FFFFh	2nd active warning.	1 = 1
04.08	Active warning 3	Shows the code of the 3rd active warning.	-

No.	Name/Value	Description	Def/FbEq16
	0000h...FFFFh	3rd active warning.	1 = 1
04.09	Active warning 4	Shows the code of the 4th active warning.	-
	0000h...FFFFh	4th active warning.	1 = 1
04.10	Active warning 5	Shows the code of the 5th active warning.	-
	0000h...FFFFh	5th active warning.	1 = 1
04.11	Latest fault	Shows the code of the 1st stored (non-active) fault.	-
	0000h...FFFFh	1st stored fault.	1 = 1
04.12	2nd latest fault	Shows the code of the 2nd stored (non-active) fault.	-
	0000h...FFFFh	2nd stored fault.	1 = 1
04.13	3rd latest fault	Shows the code of the 3rd stored (non-active) fault.	-
	0000h...FFFFh	3rd stored fault.	1 = 1
04.14	4th latest fault	Shows the code of the 4th stored (non-active) fault.	-
	0000h...FFFFh	4th stored fault.	1 = 1
04.15	5th latest fault	Shows the code of the 5th stored (non-active) fault.	-
	0000h...FFFFh	5th stored fault.	1 = 1
04.16	Latest warning	Shows the code of the 1st stored (non-active) warning.	-
	0000h...FFFFh	1st stored warning.	1 = 1
04.17	2nd latest warning	Shows the code of the 2nd stored (non-active) warning.	-
	0000h...FFFFh	2nd stored warning.	1 = 1
04.18	3rd latest warning	Shows the code of the 3rd stored (non-active) warning.	-
	0000h...FFFFh	3rd stored warning.	1 = 1
04.19	4th latest warning	Shows the code of the 4th stored (non-active) warning.	-
	0000h...FFFFh	4th stored warning.	1 = 1
04.20	5th latest warning	Shows the code of the 5th stored (non-active) warning.	-
	0000h...FFFFh	5th stored warning.	1 = 1
04.21	Fault word	Shows the cooling unit fault word.	-
	0000h...FFFFh	See below for the bit assignments of the word.	1 = 1
b0	Pumps failed	1 = See fault Pumps failed.	
b3	Inlet pressure low	1 = See fault Inlet pressure.	
b7	XSTO open	1 = Circuit connected from terminal XSTO:OUT to XSTO:IN1 and/or XSTO:IN2 on the control unit is open.	
b10	Coolant leakage	1 = See fault Coolant leakage.	
04.31	Warning word 1	Shows the warning word 1.	-
	0000h...FFFFh	See below for the bit assignments of the word.	1 = 1
b0	Coolant temp low	1 = The coolant temperature in the internal cooling circuit is below the defined limit. See parameter 31.09.	
b1	Coolant temp high	1 = The coolant temperature in the internal cooling circuit exceeds the defined limit. See parameter 31.10.	
b2	Inlet pressure low	1 = Inlet pressure is below the defined limit. See parameter 31.01.	
b3	Outlet overpressure	1 = Outlet pressure exceeds the defined limit. See parameter 31.03.	
b4	Pressure difference	1 = Pressure difference over pump(s) is below the defined limit. See parameter 31.04.	

No.	Name/Value	Description	Def/FbEq16
b7	Cabinet overtemp	1 = Cabinet temperature exceeds the defined limit. See parameter 31.11.	
b8	Ambient temp low	1 = Ambient temperature is below the minimum limit. See parameter 31.12.	
b9	Ambient overtemp	1 = Ambient temperature exceeds the defined limit. See parameter 31.13.	
b11	Valve control limit	1 = 2-way valve PI-controller output in the upper limit.	
b12	Auxiliary fan failure	1 = Auxiliary cooling fan not running.	
b13	Coolant leakage	1 = Coolant leakage in internal/external cooling circuit or condensation detected.	
b14	Pump MCB	1 = Pump 1 or 2 motor protective circuit breaker is open.	
b15	Pressure diff low	1 = The difference between the inlet and outlet pressure is below the defined limit. See parameter 31.04.	
04.32	Warning word 2	Shows the warning word 2.	-
	0000h…FFFFh	See below for the bit assignments of the word.	1 = 1
b0	Inlet pressure sensor	1 = Inlet coolant pressure sensor failure	
b1	Outlet pressure sensor	1 = Outlet coolant pressure sensor failure	
b2	Coolant temp sensor	1 = Coolant temperature sensor failure	
b3	Cabinet temp sensor	1 = Cabinet temperature sensor failure	
b4	Ambient temp sensor	1 = Ambient temperature sensor failure	

06 Control and status words

No.	Name/Value	Description	Def/FbEq16
06 Control and status words		Control and status words. All parameters in this group are read-only unless otherwise noted.	
06.01	Control word	Shows the cooling unit control word.	-
	0000h…FFFFh	See below for the bit assignments of the word.	1 = 1
b0	Start/Stop	1 = Start	
b7	Reset	1 = Reset	
06.11	Status word	Shows the cooling unit status word.	-
	0000h…FFFFh	See below for the bit assignments of the data word.	1 = 1
b0	Pump 1	1 = Pump 1 is active.	
b1	Pump 2	1 = Pump 2 is active.	
b2	Auto mode	1 = Auto mode is selected. See parameter 20.01.	
b4	Fault	1 = Fault is active.	
b7	Warning	1 = Warning is active.	
b9	Panel	1 = The control panel is in local control mode (and the control interface for the cooling unit).	
06.20	DI status	Shows the status for digital inputs.	

No.	Name/Value	Description	Def/FbEq16
	0000h...FFFFh	See below for the bit assignments of the data word.	1 = 1
b0...b5	DI1 ... DI6	1 = Digital input DIx is on.	
b15	DIIL	1 = Digital input DIIL is on.	
06.21	DIO status	Shows the status of the digital input/output signals.	
	0000h...FFFFh	See below for the bit assignments of the data word.	1 = 1
b0	DIO1	1 = Digital IO DIO1 is active.	
b1	DIO2	1 = Digital IO DIO2 is active.	
06.22	RO status	Shows the status of the relay output signals.	
	0000h...FFFFh	See below for the bit assignments of the data word.	1 = 1
b0	RO1	1 = Relay output RO1 is energized.	
b1	RO2	1 = Relay output RO2 is energized.	
b2	RO3	1 = Relay output RO3 is energized.	
06.23	Inlet pressure raw value	Shows the inlet pressure signal in milliamperes (mA) (value received from the sensor).	
	-22.000 ... 22.000 mA	Pressure value	1000 = 1
06.24	Outlet pressure raw value	Shows the outlet pressure signal in milliamperes (mA) (value received from the sensor).	
	-22.000 ... 22.000 mA	Pressure value	1000 = 1
06.25	Cabinet temp raw value	Shows the cabinet temperature signal in volts (V) (value received from the sensor).	
	-22.000 ... 22.000 V	Temperature value	1000 = 1
06.26	Ambient temp raw value	Shows the ambient temperature signal in volts (V) (value received from the sensor).	
	-22.000 ... 22.000 V	Temperature value	1000 = 1
06.27	Coolant temp raw value	Shows the coolant temperature signal in volts (V) (value received from the sensor).	
	-22.000 ... 22.000 V	Temperature value	1000 = 1
06.28	Coolant ext temp raw value	Shows the coolant external temperature signal in volts (V) (value received from the sensor).	
	-22.000 ... 22.000 V	Temperature value	1000 = 1

07 System info

No.	Name/Value	Description	Def/FbEq16
07 System info		Information on firmware. All parameters in this group are read-only.	
07.04	Firmware name	Shows the firmware identifier.	-
	...		
07.05	Firmware version	Shows the firmware version number. The format is A.BB.C.D, where A = major version, B = minor version, C = patch (ie. firmware variant code), D = 0.	-
	...		

No.	Name/Value	Description	Def/FbEq16
07.06	Loading package name	Shows the name of the firmware loading package. The format is ALCLX, where X denotes the control unit type (6 = ZCU-14).	-
	…		
07.07	Loading package version	Shows the version number of the firmware loading package. Format: See parameter 07.05.	-
	…		
07.08	Bootloader version	Shows the version number of the firmware bootloader.	-
	…		
07.11	Cpu usage	Shows the microprocessor load in percent.	-
	0 … 100%	Microprocessor load.	1 = 1%

15 I/O extension module 2

No.	Name/Value	Description	Def/FbEq16
15 I/O extension module 2		I/O extension module 2 settings.	
15.01	Module 2 type	Selects the optional module 2 type.	0
	None	None.	0
	FIO-01	Digital I/O extension.	1
	FIO-11	Analog I/O extension.	2
	FDIO-01	Digital I/O extension.	3
	FAIO-01	Analog I/O extension.	4
15.02	Module 2 location	Selects the slot where option module 2 is attached in.	1
	Not selected	None.	0
	Slot 1	Slot 1	1
	Slot 2	Slot 2	2
	Slot 3	Slot 3	3
15.03	Module 2 status	Shows the type of the option found from given location. This parameter is read-only.	
	0	No option	0
	1	FIO-01	1
	5	FIO-11	5
	7	FAIO-01	7
	9	FDIO-01	9

16 I/O extension module 3

No.	Name/Value	Description	Def/FbEq16
16 I/O extension module 3		I/O extension module 3 settings.	
16.01	Module 3 type	Selects the optional module 3 type.	0
	None	None.	0
	FIO-01	Digital I/O extension.	1
	FIO-11	Analog I/O extension.	2

No.	Name/Value	Description	Def/FbEq16
	FDIO-01	Digital I/O extension.	3
	FAIO-01	Analog I/O extension.	4
16.02	Module 3 location	Selects the slot where option module 3 is attached in.	1
	Not selected	None.	0
	Slot 1	Slot 1	1
	Slot 2	Slot 2	2
	Slot 3	Slot 3	3
16.03	Module 3 status	Shows the type of the option found from given location. This parameter is read-only.	
	0	No option	0
	1	FIO-01	1
	5	FIO-11	5
	7	FAIO-01	7
	9	FDIO-01	9

20 LCU control

No.	Name/Value	Description	Def/FbEq16
20 LCU control		Cooling unit control and settings.	
20.01	Control mode	Selects the control mode of the cooling unit.	1
	Manual	Manual control mode. User forces either pump 1 or pump 2 into use by parameter 20.02.	0
	Auto	Auto control mode. The cooling unit control logic selects pump 1 or pump 2 into use automatically. See Alternation (page 88).	1
20.02	Pump selection	If parameter 20.01 is set to value Manual, this parameter defines the pump in use (pump 1 or pump 2).	1
	1	Pump 1	1
	2	Pump 2	2
20.03	Control location	Selects the interface through which the cooling unit reads the start/stop signal. **Note:** This selection is only effective when the control location selection from the control panel is Remote. If it is Local, the control panel is the sole source for the start/stop.	0
	Local control	Digital input DI6. 1 = start, 0 = stop.	0
	DDCS controller	Serial DDCS channel (fibre optic link). Applicable only when the control unit is equipped with the FDCO adapter module (option +L508).	1
	Fieldbus A	Fieldbus adapter A. Applicable only when the control unit is equipped with a fieldbus adapter module. See Fieldbus control through a fieldbus adapter (page 137).	2
20.04	Number of pumps	Defines the number of pumps in operation.	1
	1 Pump	1 pump. Use this value for the one-pump cooling unit. If you select it for a two-pump unit, the control program will disable pump 2 and the automatic pump alternation feature, and operates only pump 1.	0

No.	Name/Value	Description	Def/FbEq16
	2 Pumps	2 pumps. Use this value for a two-pump cooling unit as standard.	1
20.05	Run time period P1	Defines run time period for pump 1 in a two-pump cooling unit when the automatic alternation is in use. See section Alternation (page 88).	3 d
	1 … 7 d	Time	1 = 1 d
20.06	Run time period P2	Defines run time period for pump 2 in a two-pump cooling unit when the automatic alternation is in use. See Alternation (page 88).	3 d
	1 … 7 d	Time	1 = 1 d
20.07	Stop delay	Defines the running time of pump(s) after the stop command. Tune this value on site, if a delayed cooling period after the stop is necessary. **Note:** This parameter also defines the time for the Standby function (20.08).	10 min
	10 … 60 min	Time	1 = 1 min
20.08	Standby enable	Enables the Standby function. See Standby (page 89).	On
	Off	Disable	0
	On	Enable	1
20.09	Standby delay	Defines the delay time for the Standby function (20.08).	7 d
	1 … 21 d	Time in days	1 = 1 d
20.11	Start trigger type	Selects the trigger type for the start/stop signal.	Level
	Edge	Start at the rising edge of the signal (0-> 1), stop at the falling edge of the signal (1 -> 0).	0
	Level	Start signal on (1) = start, start signal off (0) = stop.	1
20.29	Test auxiliary fan	Tests auxiliary fan operation.	0
	0	Disable. If the parameter value is set to 0, the auxiliary fan does not operate when the temperature of the cabinet is less than 50 °C (122 °F).	0
	1	Enable. If you test the auxiliary fan, set the parameter value to 0 after testing. If you activate the control board boot (96.08) or cycle the power, the parameter value is set to 0 automatically.	1

22 Coolant temperature control

No.	Name/Value	Description	Def/FbEq16
22 Coolant temperature control		Control of the coolant temperature.	
22.01	Valve control	Enables the 2-way control valve function.	0
	Off	0	0
	On	1	1
22.02	Coolant temp reference	Shows the value of coolant temperature reference (internal cooling circuit) of the 2-way control valve function.	0 °C
	-5.0 … 60.0 °C	Temperature value	100 = 1 °C

No.	Name/Value	Description	Def/FbEq16
22.20	Follow ambient mode	Activates the Follow ambient temperature mode. The Follow ambient temperature mode adjusts the coolant temperature to correspond the ambient temperature between 26 °C (low limit) and 40 °C (high limit).	0
	Off	Inactive (coolant temperature 26 °C)	0
	On	Active	1
22.31	Proportional gain	Defines the proportional gain (Kp) of the valve PI controller (2-way control valve function).	1.0
	0.2 … 2.5	Proportional gain	100 = 1
22.32	Integration time	Defines the integration time of the valve PI controller (2-way control valve function). The integration time defines the rate at which the controller output changes when the error value is constant and the proportional gain of the speed controller is 1. The shorter the integration time, the faster the continuous error value is corrected. Too short integration time makes the control unstable.	60.0
	0 … 600 s	Integration time	10 = 1
22.34	Preset valve position	Defines the position of the 2-way control valve when the 2-way control valve function is disabled (22.01), or when the cooling unit is stopped. You can use a preset position for testing purposes, ie, to test that the valve reaches it maximum (100%) and minimum limits (0%) **Note:** When the 2-way control valve function is enabled (22.01), but it does not receive the temperature measurement value (eg, due to broken connection), the control function operates the preset position defined by this parameter.	0.0
	0.0 … 100.0%	Valve position	10 = 1%
22.35	Valve control output	Shows the output of the 2-way control valve function. This value is used as the valve control signal (4 … 20 mA signal of analog output AO1 of the control unit). 4 … 20 mA corresponds to 0…100%.	-
	0.0 … 100.0%	Output value	10 = 1%

31 Fault functions

No.	Name/Value	Description	Def/FbEq16
31 Fault functions		Configuration of external events; selection of behavior of the unit upon fault situations.	
31.01	Inlet pressure min warning	Defines the minimum inlet pressure for the warning (Inlet pressure).	1.5 bar
	0.0 … 10.0 bar	Pressure value	10 = 1 bar
31.02	Inlet pressure min fault	Defines minimum inlet pressure for the fault (Inlet pressure).	1.0 bar
	0.0 … 10.0 bar	Pressure value	10 = 1 bar
31.03	Outlet pressure max warning	Defines maximum outlet pressure for warning (Outlet pressure).	6.0 bar
	0.0 … 10.0 bar	Pressure value	10 = 1 bar
31.04	Pressure diff warning	Defines the minimum pressure difference for warning (Pressure difference low).	1.0 bar
	0.0 … 10.0 bar	Pressure value	10 = 1 bar

No.	Name/Value	Description	Def/FbEq16
31.05	Pressure diff fault	Defines the minimum pressure difference limit for fault (Pressure difference).	0.8 bar
	0.0 … 10.0 bar	Pressure value	10 = 1 bar
31.06	Leakage action	Selects the action in case the control program detects a leakage.	Fault
	Warning	Warning (Coolant leakage).	0
	Fault	Fault (Coolant leakage).	1
31.07	Leakage delay	Defines the delay for the leakage function (31.06).	0 min
	0 … 500 min	Delay	1 = 1 min
31.08	Pressure delay	Defines the pressure delay for the liquid pressure monitoring function. The delay is in use during the pump start.	5 s
	1 … 10 s	Time	1 = 1 s
31.09	Coolant min temperature	Defines the warning limit of the minimum liquid temperature in the internal cooling circuit (Coolant temperature below limit).	5.0 °C
	-5.0 … 40.0 °C	Temperature	100 = 1 °C
31.10	Coolant max temperature	Defines the warning limit of the maximum liquid temperature in the internal cooling circuit (Coolant overtemperature).	45.0 °C
	0.0 … 70.0 °C	Temperature	100 = 1 °C
31.11	Cabinet max temperature	Defines the warning limit of the maximum cabinet temperature (Cabinet overtemperature).	60.0 °C
	-10.0 … 70.0 °C	Temperature	100 = 1 °C
31.12	Ambient min temperature	Defines the warning limit of the minimum ambient temperature (Ambient temperature below limit).	5.0 °C
	-10.0 … 60.0 °C	Temperature	100 = 1 °C
31.13	Ambient max temperature	Defines the warning limit of the maximum ambient temperature (Ambient overtemperature).	55.0 °C
	-10.0 … 60.0 °C	Temperature	100 = 1 °C
31.20	Pressure difference reset	Resets the pressure difference monitoring function. Reset after fixing the cause for the pressure difference fault/warning.	1
	Done	Done (control program restores automatically this value after reset)	0
	Reset	Reset	1

47 Data storage

No.	Name/Value	Description	Def/FbEq16
47 Data storage		Data storage parameters that can be written to and read from using other parameters' source and target settings. Note that there are different storage parameters for different data types. Integer-type storage parameters cannot be used as the source of other parameters.	
47.01	Data storage 1 real32	Shows the real-type data storage parameter 1. Parameters 47.01…47.08 are real 32-bit numbers that can be used as source values of other parameters.	0.000
	2147483.264 … 2147473.264	32-bit real (floating point) number.	

No.	Name/Value	Description	Def/FbEq16
…	…	…	…
47.08	Data storage 8 real32	Shows the real-type data storage parameter 8.	0.000
	2147483.264 … 2147473.264	32-bit real (floating point) number.	
47.11	Data storage 1 int32	Shows the 32-bit integer-type data storage parameter 1.	0
	-2147483648 … 2147483647	32-bit integer.	-
…	…	…	…
47.18	Data storage 8 int32	Shows the 32-bit integer-type data storage parameter 8.	0
	-2147483648 … 2147483647	32-bit integer.	-
47.21	Data storage 1 int16	Shows the 16-bit integer-type data storage parameter 1.	0
	-32768…32767	16-bit integer	1 = 1
…	…	…	…
47.28	Data storage 8 int16	Shows the 16-bit integer-type data storage parameter 8.	0
	-32768…32767	16-bit integer.	1 = 1

49 Panel port communication

No.	Name/Value	Description	Def/FbEq16
49 Panel port communication		Communication settings for the control panel port.	
49.01	Node ID number	Defines the node ID of the unit. All devices connected to the network must have a unique node ID. **Note:** For networked drives/units, it is advisable to reserve ID 1 for spare or replacement drive/unit.	1
	1…32	Node ID.	1 = 1
49.03	Baud rate	Defines the transfer rate of the link	230.4 kbps
	38.4 kbps	38.4 kbit/s	1
	57.6 kbps	57.6 kbit/s	2
	86.4 kbps	86.4 kbit/s	3
	115.2 kbps	115.2 kbis/s	4
	230.4 kbps	230.4 kbit/s	5
49.04	Communication loss time	Sets a timeout for control panel (or PC tool) communication. If a communication break lasts longer than the timeout, the action specified by parameter 49.05 is taken.	10.0 s
	0.3 … 3000.0 s	Panel/PC tool communication timeout.	10 = 1 s
49.05	Communication loss action	Selects how the unit reacts to a control panel (or PC tool) communication break. Changes to this parameter take effect after the control unit is rebooted or the new settings are validated with parameter 49.06.	Fault
	No action	No action taken	0

No.	Name/Value	Description	Def/FbEq16
	Fault	The unit trips (Control panel loss). This only occurs if control is expected from the control panel (it is selected as source of start/stop in the currently active control location).	1
	Warning	Control program generates a warning (Control panel loss). This only occurs if control is expected from the control panel (it is selected as source of start/stop in the currently active control location). **WARNING!** Make sure that it is safe to continue operation in case of a communication break.	5
49.06	Refresh settings	Applies to parameters 49.01…49.05. **Note:** Refreshing may cause a communication break, so reconnecting the unit may be required.	Done
	Done	Refresh done or not requested.	0
	Refresh	Refresh parameters 49.01…49.05. The value reverts automatically to Done.	1

50 Fieldbus adapter (FBA)

No.	Name/Value	Description	Def/FbEq16
50 Fieldbus adapter (FBA)		Fieldbus communication configuration.	
50.01	FBA A enable	Enables/disables communication between the unit and fieldbus adapter A, and specifies the slot the adapter is installed into.	Disable
	Disable	Communication between unit and fieldbus adapter A disabled.	0
	Option slot 1	Reserved. Slot 1 is not available for fieldbus adapters.	1
	Option slot 2	Communication between unit and fieldbus adapter A enabled. The adapter is in slot 2.	2
	Option slot 3	Communication between unit and fieldbus adapter A enabled. The adapter is in slot 3.	3
50.02	FBA A comm loss func	Selects how the unit reacts upon a fieldbus communication break. A time delay for the action can be defined by parameter 50.03. See also parameter 50.26.	No action
	No action	No action taken.	0
	Fault	The unit trips (FBA A communication). This only occurs if control is expected from the FBA A interface (FBA A selected as source of start/stop), or if supervision is forced using parameter 50.26.	1
	Fault always	The unit trips (FBA A communication). This occurs even though no control is expected from the FBA A interface.	4
	Warning	The unit generates a warning (FBA A communication). This only occurs if control is expected from the FBA A interface, or if supervision is forced using parameter 50.26. **WARNING!** Make sure that it is safe to continue operation in case of a communication break.	5

No.	Name/Value	Description	Def/FbEq16
50.03	FBA A comm loss t out	Defines the time delay before the action defined by parameter 50.02 is taken. Time count starts when the communication link fails to update the message. As a rule of thumb, this parameter should be set to at least 3 times the transmit interval of the master. **Note:** There is a 60-second boot-up delay immediately after power-up. During the delay, the communication break monitoring is disabled (but communication itself can be active).	0.3 s
	0.3 … 6553.5 s	Time delay.	
50.04	FBA A ref1 type	**Note:** The control program does not need/use this reference value. Selects the type and scaling of reference ref1 received from fieldbus adapter A. **Note:** Fieldbus-specific communication profiles may use different scalings. For more information, see the manual of the fieldbus adapter.	Auto
	Auto	See Transparent.	0
	Transparent	No scaling is applied (the 16-bit scaling is 1 = 1 unit).	1
	General	Generic reference with a scaling of 100 = 1 (ie. integer and two decimals).	2
50.05	FBA A ref2 type	**Note:** The control program does not need/use this reference value. Selects the type and scaling of reference ref2 received from fieldbus adapter A. See parameter 50.04.	Auto
	Auto	See parameter 50.04 FBA A ref1 type.	
	…	…	
50.07	FBA A actual 1 type	Selects the type and scaling of actual value act1 transmitted to the fieldbus network through fieldbus adapter A. **Note:** Fieldbus-specific communication profiles may use different scalings. For more information, see the manual of the fieldbus adapter.	Auto
	Auto	See *Transparent*.	0
	Transparent	The value selected by parameter 50.10 is sent as actual value act1. No scaling is applied (the 16-bit scaling is 1 = 1 unit).	1
	General	The value selected by parameter 50.10 is sent as actual value act1 with a 16-bit scaling of 100 = 1 unit (ie. integer and two decimals).	
50.08	FBA A actual 2 type	Selects the type and scaling of actual value act2 transmitted to the fieldbus network through fieldbus adapter A.	Auto
	Auto	See parameter 50.07.	0
	…	See parameter 50.07.	1
50.09	FBA A SW transparent source	Selects the source of the fieldbus adapter A status word (SW) when the fieldbus adapter A is set to a transparent communication profile eg. by its configuration parameters (group 51 FBA A settings).	Not selected
	Not selected	No source selected.	0
	Other…	Other source. See Terms and abbreviations (page 93).	

No.	Name/Value	Description	Def/FbEq16
50.10	FBA A act1 transparent source	When parameter 50.07 is set to value Transparent or set to value General, this parameter selects the source of actual value act1 transmitted to the fieldbus network through fieldbus adapter A.	Not selected
	Not selected	No source selected.	0
	Other…	Other source. See Terms and abbreviations (page 93).	
50.11	FBA A act2 transparent source	When parameter 50.08 is set to value Transparent or set to value General, this parameter selects the source of actual value act2 transmitted to the fieldbus network through fieldbus adapter A.	Not selected
	Not selected	No source selected.	0
	Other…	Other source. See Terms and abbreviations (page 93).	
50.12	FBA A debug mode	Enables the display of raw (unmodified) data received from and sent to fieldbus adapter A in parameters 50.13…50.18. This functionality should only be used for debugging.	Disable
	Disable	Display of raw data from fieldbus adapter A disabled.	0
	Fast	Display of raw data from fieldbus adapter A enabled.	1
50.13	FBA A control word	Displays the raw (unmodified) control word sent by the master (PLC) to fieldbus adapter A if debugging is enabled by parameter 50.12. This parameter is read-only.	00.00.00.00
	00000000h… FFFFFFFFh	Control word sent by master to fieldbus adapter A.	
50.14	FBA A reference 1	Displays raw (unmodified) reference ref1 sent by the master (PLC) to fieldbus adapter A if debugging is enabled by parameter 50.12.	0
	-2147483648… 2147483648	Raw REF1 sent by master to fieldbus adapter A.	
50.15	FBA A reference 2	Displays raw (unmodified) reference ref2 sent by the master (PLC) to fieldbus adapter A if debugging is enabled by parameter 50.12.	0
	-2147483648… 2147483648	Raw ref2 sent by master to fieldbus adapter A.	
50.16	FBA A status word	Displays the raw (unmodified) status word sent by fieldbus adapter A to the master (PLC) if debugging is enabled by parameter 50.12. This parameter is read-only.	00.00.00.00
	00000000h… FFFFFFFFh	Status word sent by fieldbus adapter A to master.	
50.17	FBA A actual value 1	Displays raw (unmodified) actual value act1 sent by fieldbus adapter A to the master (PLC) if debugging is enabled by parameter 50.12.	0
	-2147483648… 2147483648	Raw act1 sent by fieldbus adapter A to master.	
50.18	FBA A actual value 2	Displays raw (unmodified) actual value act2 sent by fieldbus adapter A to the master (PLC) if debugging is enabled by parameter 50.12.	0
	-2147483648… 2147483648	Raw act2 sent by fieldbus adapter A to master.	

No.	Name/Value	Description	Def/FbEq16
50.21	FBA A timelevel sel	Selects the communication time levels for fieldbus adapter A. In general, lower time levels of read/write services reduce CPU load. The table below shows the time levels of the read/write services for cyclic high and cyclic low data with each parameter setting. Selection / Cyclic high * / Cyclic low ** Monitoring / 10 ms / 2 ms Normal / 2 ms / 10 ms Fast / 500 us / 2 ms Very fast / 250 us / 2 ms * Cyclic high data consists of fieldbus status word, act1 and act2. ** Cyclic low data consists of the parameter data mapped to parameter groups 52 and 53, and acyclic data. Control word, ref1 and ref2 are handled as interrupts generated on receipt of cyclic high messages.	Normal
	Normal	Normal speed	0
	Fast	Fast speed	1
	Very fast	Very fast speed	2
	Monitoring	Low speed. Optimized for PC tool communication and monitoring usage.	3
50.26	FBA A comm supervision force	Not in use. FBA A communication monitoring selection.	0000b
	…	…	
50.31	FBA B enable	Enables/disables communication between the unit and fieldbus adapter B, and specifies the slot the adapter is installed into. **Note:** The cooling unit cannot be controlled by the FBA B control word.	Disable
	Disable	Communication between unit and fieldbus adapter B disabled.	0
	Option slot 1	Reserved. Slot 1 is not available for fieldbus adapters.	1
	Option slot 2	Communication between unit and fieldbus adapter B enabled. The adapter is in slot 2.	2
	Option slot 3	Communication between unit and fieldbus adapter B enabled. The adapter is in slot 3.	3
50.32	FBA B comm loss func	Selects how the unit reacts upon a fieldbus adapter B communication break. A time delay for the action can be defined by parameter 50.33.	No action
	No action	No action taken.	0
	Fault	The unit trips on fault 7520 FBA B communication. This only occurs if control is expected from the FBA B interface (FBA B selected as source of start/stop/reference in the currently active control location), or if supervision is forced using parameter 50.56.	1
	Fault always	The unit trips on fault 7520 FBA B communication.	4

No.	Name/Value	Description	Def/FbEq16
	Warning	The unit generates warning A7C2 FBA B communication. This only occurs if control is expected from the FBA B interface, or if supervision is forced using parameter 50.56. **WARNING!** Make sure that it is safe to continue operation in case of a communication break.	5
50.33	FBA B comm loss timeout	Defines the time delay before the action defined by parameter 50.32 is taken. Time count starts when the communication link fails to update the message. As a rule of thumb, this parameter should be set to at least 3 times the transmit interval of the master. **Note:** There is a 60-second boot-up delay immediately after power-up. During the delay, the communication break monitoring is disabled (but communication itself can be active).	0.3 s
	0.3 … 6553.5 s	Time delay.	
50.34	FBA B ref1 type	**Note:** The control program does not need or use external references. Selects the type and scaling of reference ref1 received from fieldbus adapter B. See parameter 50.04.	Auto
	…	…	
50.35	FBA B ref2 type	**Note:** The control program does not need or use external references. Selects the type and scaling of reference ref2 received from fieldbus adapter B. See parameter 50.04.	Auto
	…	…	
50.37	FBA B actual 1 type	Selects the type and scaling of actual value act1 transmitted to the fieldbus network through fieldbus adapter B. See parameter 50.07.	Auto
	…	…	
50.38	FBA B actual 2 type	Selects the type and scaling of actual value act2 transmitted to the fieldbus network through fieldbus adapter B. See parameter 50.07.	Auto
	…	…	
50.39	FBA B SW transparent source	Selects the source of the fieldbus adapter B status word when the fieldbus adapter B is set to a transparent communication profile eg. by its configuration parameters (group 54). See parameter 50.09.	Not selected
	Not selected	No source selected.	0
	Other	Other source. See Terms and abbreviations (page 93).	
50.40	FBA B act1 transparent source	When parameter 50.37 is set to value Transparent or set to value General, this parameter selects the source of actual value act1 transmitted to the fieldbus network through fieldbus adapter B.	Not selected
	Not selected	No source selected.	0
	Other	Other source. See Terms and abbreviations (page 93).	
50.41	FBA B act2 transparent source	When parameter 50.38 is set to value Transparent or set to value General, this parameter selects the source of actual value act2 transmitted to the fieldbus network through fieldbus adapter B.	Not selected

No.	Name/Value	Description	Def/FbEq16
	Not selected	No source selected.	
	Other	Other source. See Terms and abbreviations (page 93).	
50.42	FBA B debug mode	Enables the display of raw (unmodified) data received from and sent to fieldbus adapter B in parameters 50.43…50.48. This functionality should only be used for debugging.	Disable
	Disable	Display of raw data from fieldbus adapter B disabled.	0
	Fast	Display of raw data from fieldbus adapter B enabled.	1
50.43	FBA B control word	Displays the raw (unmodified) control word sent by the master (PLC) to fieldbus adapter B if debugging is enabled by parameter 50.42.	00.00.00.00
	00000000h… FFFFFFFFh	Control word sent by master to fieldbus adapter B.	-
50.44	FBA B reference 1	Displays raw (unmodified) reference ref1 sent by the master (PLC) to fieldbus adapter B if debugging is enabled by parameter 50.42.	0
	-2147483648… 2147483648	Raw REF1 sent by master to fieldbus adapter B.	
50.45	FBA B reference 2	Displays raw (unmodified) reference ref2 sent by the master (PLC) to fieldbus adapter B if debugging is enabled by parameter 50.42.	0
	-2147483648… 2147483648	Raw REF2 sent by master to fieldbus adapter B.	
50.46	FBA B status word	Displays the raw (unmodified) status word sent by fieldbus adapter B to the master (PLC) if debugging is enabled by parameter 50.42.	00.00.00.00
	00000000h… FFFFFFFFh	Status word sent by fieldbus adapter B to master.	
50.47	FBA B actual value 1	Displays raw (unmodified) actual value act1 sent by fieldbus adapter B to the master (PLC) if debugging is enabled by parameter 50.42.	0
	-2147483648… 2147483648	Raw act1 sent by fieldbus adapter B to master.	
50.48	FBA B actual value 2	Displays raw (unmodified) actual value act2 sent by fieldbus adapter B to the master (PLC) if debugging is enabled by parameter 50.42.	0
	-2147483648… 2147483648	Raw act2 sent by fieldbus adapter B to master.	

<table>
<tr><th>No.</th><th>Name/Value</th><th>Description</th><th>Def/FbEq16</th></tr>
<tr><td>50.51</td><td>FBA B timelevel sel</td><td>Selects the communication time levels.
In general, lower time levels of read/write services reduce CPU load. The table below shows the time levels of the read/write services for cyclic high and cyclic low data with each parameter setting.
<table>
<tr><td>Selection</td><td>Cyclic high *</td><td>Cyclic low **</td></tr>
<tr><td>Monitoring</td><td>10 ms</td><td>2 ms</td></tr>
<tr><td>Normal</td><td>2 ms</td><td>10 ms</td></tr>
<tr><td>Fast</td><td>500 us</td><td>2 ms</td></tr>
<tr><td>Very fast</td><td>250 us</td><td>2 ms</td></tr>
</table>
* Cyclic high data consists of fieldbus status word, act1 and act2.
** Cyclic low data consists of the parameter data mapped to parameter groups 55 and 56, and acyclic data.
Control word, ref1 and ref2 are handled as interrupts generated on receipt of cyclic high messages.</td><td>Normal</td></tr>
<tr><td></td><td>Normal</td><td>Normal speed.</td><td>0</td></tr>
<tr><td></td><td>Fast</td><td>Fast speed.</td><td>1</td></tr>
<tr><td></td><td>Very fast</td><td>Very fast speed.</td><td>2</td></tr>
<tr><td></td><td>Monitoring</td><td>Low speed. Optimized for PC tool communication and monitoring usage.</td><td>3</td></tr>
<tr><td>50.56</td><td>FBA B comm super-vision force</td><td>Not in use.</td><td>0000b</td></tr>
<tr><td></td><td>...</td><td>...</td><td></td></tr>
</table>

51 FBA A settings

No.	Name/Value	Description	Def/FbEq16
51 FBA A settings		Fieldbus adapter A configuration.	
51.01	FBA A type	Displays the type of the connected fieldbus adapter module. **0** = Module is not found or is not properly connected, or is disabled by parameter 50.01 **1** = PROFIBUS-DP **32** = CANopen **37** = DeviceNet **128** = Ethernet **132** = PROFInet IO **135** = EtherCAT **136** = ETH Pwrlink **485** = RS-485 comm **62944** = SERCOS **101** = ControlNet **133** = PROFIsafe **47808** = BACnet/IP **2222** = Ethernet/IP **502** = Modbus/TCP This parameter is read-only.	None
51.02	FBA A Par2	Displays fieldbus adapter A parameter 2. Parameters 51.02…51.26 are adapter module specific. For more information, see the documentation of the fieldbus adapter module. Note that not all of these parameters are necessarily in use.	0
	0…65535	Fieldbus adapter configuration parameter.	1 = 1
	…	…	…
51.26	FBA A Par26	See parameter 51.02.	0
	0…65535	Fieldbus adapter configuration parameter.	1 = 1
51.27	FBA A par refresh	Validates any changed fieldbus adapter module configuration settings (adapter A). After refreshing, the value reverts automatically to Done. **Note:** This parameter cannot be changed while the unit is running.	Done
	Done	Refreshing done.	0
	Refresh	Refreshing.	1
51.28	FBA A par table ver	Displays the parameter table revision of the fieldbus adapter module mapping file (stored in the memory of the unit). In format axyz, where ax = major table revision number; yz = minor table revision number. This parameter is read-only.	0 hex
		Parameter table revision of adapter module.	-
51.29	FBA A drive type code	Displays the unit type code in the fieldbus adapter module mapping file (stored in the memory of the unit). This parameter is read-only.	0
	0…65535	Unit type code stored in the mapping file.	1 = 1

No.	Name/Value	Description	Def/FbEq16
51.30	FBA A mapping file ver	Displays the fieldbus adapter module mapping file revision stored in the memory of the unit in decimal format. This parameter is read-only.	0
	0…65535	Mapping file revision.	1 = 1
51.31	D2FBA A comm status	Displays the status of the fieldbus adapter module communication.	-
	Not configured	Adapter is not configured.	0
	Initializing	Adapter is initializing.	1
	Time out	A timeout has occurred in the communication between the adapter and the unit.	2
	Configuration error	Adapter configuration error: mapping file not found in the file system of the unit, or mapping file upload has failed more than three times.	3
	Off-line	Fieldbus communication is off-line.	4
	On-line	Fieldbus communication is on-line, or fieldbus adapter has been configured not to detect a communication break. For more information, see the documentation of the fieldbus adapter.	5
	Reset	Adapter is performing a hardware reset.	6
51.32	FBA A comm SW ver	Displays the patch and build versions of the adapter module firmware in format xxyy, where xx = patch version number, yy = build version number. Example: C802 = 200.02 (patch version 200, build version 2).	
		Patch and build versions of adapter module firmware.	-
51.33	FBA A appl SW ver	Displays the major and minor versions of the adapter module firmware in format xyy, where x = major revision number, yy = minor revision number. Example: 300 = 3.00 (major version 3, minor version 00).	
		Major and minor versions of adapter module firmware.	-

52 FBA A data in

No.	Name/Value	Description	Def/FbEq16
52 FBA A data in		Selection of data to be transferred from the cooling unit to the fieldbus controller through fieldbus adapter A. **Note:** When fieldbus adapter A is enabled, some fieldbus adapter modules reserve parameters in this group for the transfer of predefined data such as status word (SW). See the fieldbus adapter module manual for more information. **Note:** 32-bit values require two consecutive parameters. Whenever a 32-bit value is selected in a data parameter, the next parameter is automatically reserved.	
52.01	FBA A data in1	Selects the data to be transferred from the cooling unit to the fieldbus controller as the data in1 word through the fieldbus adapter A.	None
	None	None.	0
	CW 16bit	Control Word (16 bits). See parameter 06.01.	1
	Ref1 16bit	Reference ref1 (16 bits). Not valid for LCU.	2

No.	Name/Value	Description	Def/FbEq16
	Ref2 16bit	Reference ref2 (16 bits). Not valid for LCU.	3
	SW 16bit	Status Word (16 bits). See parameter 06.11.	4
	Act1 16bit	Actual value act1 (16 bits). See parameter 50.10.	5
	Act2 16bit	Actual value act2 (16 bits). See parameter 50.11.	6
	CW 32bit	Control Word (32 bits)	11
	Ref1 32bit	Reference REF1 (32 bits). Not valid for LCU.	12
	Ref2 32bit	Reference REF2 (32 bits). Not valid for LCU.	13
	SW 32bit	Status Word (32 bits)	14
	Act1 32bit	Actual value act1 (32 bits)	15
	Act2 32bit	Actual value act2 (32 bits)	16
	SW2 16bit	Status Word 2 (16 bits)	24
	Other…	Other source. See Terms and abbreviations (page 93).	-
52.02	FBA A data in2	See parameter 52.01.	None
…	…	…	…
52.12	FBA A data in12	See parameter 52.01.	None
…	…	…	…

53 FBA A data out

No.	Name/Value	Description	Def/FbEq16
53 FBA A data out		Selection of data to be transferred from the fieldbus controller to cooling unit through fieldbus adapter A. **Note:** When fieldbus adapter A is enabled, some fieldbus adapter modules reserve parameters in this group for the transfer of predefined data such as control word (CW). See the fieldbus adapter module manual for more information. **Note:** 32-bit values require two consecutive parameters. Whenever a 32-bit value is selected in a data parameter, the next parameter is automatically reserved.	
53.01	FBA A data out1	Selects the data to be transferred from the fieldbus controller to the cooling unit as the data in1 word through the fieldbus adapter A.	None
	None	None.	0
	CW 16bit	Control word (16 bits).	1
	Ref1 16bit	Reference ref1 (16 bits)	2
	Ref2 16bit	Reference ref2 (16 bits)	3
	CW 32bit	Control word (32 bits)	11
	Ref1 32bit	Reference ref1 (32 bits)	12
	Ref2 32bit	Reference ref2 (32 bits)	13
	CW2 16bit	Control word 2 (16 bits)	21
	Other	Other source. See Terms and abbreviations (page 93).	-
53.02	FBA A data out2	See parameter 53.01.	None
…	…	…	…
53.12	FBA A data out12	See parameter 53.01.	None

No.	Name/Value	Description	Def/FbEq16
…	…	…	

54 FBA B settings

No.	Name/Value	Description	Def/FbEq16
54 FBA B settings		Fieldbus adapter B configuration. **Note:** You can use the fieldbus adapter B only for monitoring purposes, not as the control location/interface.	
54.01	FBA B type	Displays the type of the connected fieldbus adapter module. **0** = Module is not found or is not properly connected, or is disabled by parameter 50.31 **1** = PROFIBUS-DP **32** = CANopen **37** = DeviceNet **128** = Ethernet **132** = PROFInet IO **135** = EtherCAT **136** = ETH Pwrlink **485** = RS-485 comm **62944** = SERCOS **101** = ControlNet **133** = PROFIsafe **47808** = BACnet/IP **2222** = Ethernet/IP **502** = Modbus/TCP. This parameter is read-only.	None
54.02	FBA B Par2	Parameters 54.02…54.26 are adapter module-specific. For more information, see the documentation of the fieldbus adapter module. Note that not all of these parameters are necessarily in use.	0
	0…65535	Fieldbus adapter configuration parameter.	1 = 1
	…	…	…
54.26	FBA B Par26	See parameter 54.02.	0
	0…65535	Fieldbus adapter configuration parameter.	1 = 1
54.27	FBA B par refresh	Validates any changed fieldbus adapter module configuration settings. After refreshing, the value reverts automatically to Done. **Note:** This parameter cannot be changed while the unit is running.	Done
	Done	Refreshing done.	0
	Refresh	Refreshing.	1
54.28	FBA B par table ver	Displays the parameter table revision of the fieldbus adapter module mapping file (stored in the memory of the unit). In format axyz, where ax = major table revision number; yz = minor table revision number.	0 hex
		Parameter table revision of adapter module.	-
54.29	FBA B drive type code	Displays the unit type code in the fieldbus adapter module mapping file (stored in the memory of the unit).	0
	0…65535	Unit type code stored in the mapping file.	1 = 1

No.	Name/Value	Description	Def/FbEq16
54.30	FBA B mapping file ver	Displays the fieldbus adapter module mapping file revision stored in the memory of the unit in decimal format.	0
	0…65535	Mapping file revision.	
54.31	D2FBA B comm status	Displays the status of the fieldbus adapter module communication.	-
	Not configured	Adapter is not configured.	0
	Initializing	Adapter is initializing.	1
	Time out	A timeout has occurred in the communication between the adapter and the unit.	2
	Configuration error	Adapter configuration error: mapping file not found in the file system of the unit, or mapping file upload has failed more than three times.	3
	Off-line	Fieldbus communication is off-line.	4
	On-line	Fieldbus communication is on-line, or fieldbus adapter has been configured not to detect a communication break. For more information, see the documentation of the fieldbus adapter.	5
	Reset	Adapter is performing a hardware reset.	6
54.32	FBA B comm SW ver	Displays the patch and build versions of the adapter module firmware in format xxyy, where xx = patch version number, yy = build version number. Example: C802 = 200.02 (patch version 200, build version 2).	0 hex
		Patch and build versions of adapter module firmware.	
54.33	FBA B appl SW ver	Displays the major and minor versions of the adapter module firmware in format xyy, where x = major revision number, yy = minor revision number. Example: 300 = 3.00 (major version 3, minor version 00).	0 hex
		Major and minor versions of adapter module firmware.	

55 FBA B data in

No.	Name/Value	Description	Def/FbEq16
55 FBA B data in		Selection of data to be transferred from cooling unit to fieldbus controller through fieldbus adapter B. **Note:** When fieldbus adapter B is enabled, some fieldbus adapter modules reserve parameters in this group for the transfer of predefined data such as status word (SW). See the fieldbus adapter module manual for more information. **Note:** 32-bit values require two consecutive parameters. Whenever a 32-bit value is selected in a data parameter, the next parameter is automatically reserved.	
55.01	FBA B data in1	Selects the data to be transferred from the cooling unit to the fieldbus controller as the data in1 word through the fieldbus adapter B.	None
	None	None.	0
	CW 16bit	Control Word (16 bits).	1
	Ref1 16bit	Reference REF1 (16 bits)	2
	Ref2 16bit	Reference REF2 (16 bits)	3

No.	Name/Value	Description	Def/FbEq16
	SW 16bit	Status Word (16 bits), that is, the value of parameter 06.11.	4
	Act1 16bit	Actual value act1 (16 bits)	5
	Act2 16bit	Actual value act2 (16 bits)	6
	CW 32bit	Control Word (32 bits)	11
	Ref1 32bit	Reference REF1 (32 bits). Not in use.	12
	Ref2 32bit	Reference REF2 (32 bits). Not in use.	13
	SW 32bit	Status Word (32 bits)	14
	Act1 32bit	Actual value act1 (32 bits)	15
	Act2 32bit	Actual value act2 (32 bits)	16
	SW2 16bit	Status Word 2 (16 bits)	24
	Other	Other source. See Terms and abbreviations (page 93).	
55.02	FBA B data in2	See parameter 55.01.	None
…	…	…	…
55.12	FBA B data in12	See parameter 55.01.	None

56 FBA B data out

No.	Name/Value	Description	Def/FbEq16
56 FBA B data out		Selection of data to be transferred from fieldbus controller to cooling unit through fieldbus adapter B. **Note:** You can use Fieldbus B only for monitoring purposes. You cannot control the cooling unit through it. **Note:** When fieldbus adapter B is enabled, some fieldbus adapter modules reserve parameters in this group for the transfer of predefined data such as control word (CW). See the fieldbus adapter module manual for more information. **Note:** 32-bit values require two consecutive parameters. Whenever a 32-bit value is selected in a data parameter, the next parameter is automatically reserved.	
56.01	FBA B data out1	Selects the data to be transferred from fieldbus controller to the cooling unit as the data out1 word through the fieldbus adapter B.	None
	None	None.	0
	CW 16bit	Control Word (16 bits).	1
	Ref1 16bit	Reference REF1 (16 bits).	2
	Ref2 16bit	Reference REF2 (16 bits).	3
	CW 32bit	Control Word (32 bits).	11
	Ref1 32bit	Reference REF1 (32 bits).	12
	Ref2 32bit	Reference REF2 (32 bits).	13
	CW2 16bit	Control Word 2 (16 bits).	21
	Other…	Other source. See Terms and abbreviations (page 93).	
56.02	FBA B data out2	See parameter 56.01.	None
	…	…	…
56.12	FBA B data out12	See parameter 56.01.	None

No.	Name/Value	Description	Def/FbEq16
	…	…	…

60 DDCS communication

No.	Name/Value	Description	Def/FbEq16
60 DDCS communication		DDCS communication configuration. The DDCS protocol is used in the communication between • units in a master/follower configuration, • the unit and an external controller such as the AC 800M, or • the units of the drive system. All of the above utilize a fiber optic link which also requires an FDCO module (typically with ZCU control units) or an RDCO module (with BCU control units). Master/follower and external controller communication can also be implemented through shielded twisted-pair cable connected to the XD2D connector of the unit. This group also contains parameters for drive-to-drive (D2D) communication supervision.	
60.51	DDCS controller comm port	Selects the DDCS channel used for connecting an external controller (such as an AC 800M).	Not in use
	Not in use	None (communication disabled).	0
	Slot 1A	Channel A on FDCO module in slot 1.	1
	Slot 2A	Channel A on FDCO module in slot 2.	2
	Slot 3A	Channel A on FDCO module in slot 3.	3
	Slot 1B	Channel B on FDCO module in slot 1.	4
	Slot 2B	Channel B on FDCO module in slot 2.	5
	Slot 3B	Channel B on FDCO module in slot 3.	6
60.52	DDCS controller node address	Selects the node address of the unit for communication with the external controller. No two nodes on-line may have the same address. With an AC 800M (CI858) DriveBus connection, units must be addressed 1…24. With an AC 80 DriveBus connection, units must be addressed 1…12. With optical ModuleBus, the unit address is set according to the position value as follows: 1. Multiply the hundreds of the position value by 16. 2. Add the tens and ones of the position value to the result. For example, if the position value is 101, this parameter must be set to 1·16+1 = 17.	1
	1..254	Node address.	
60.55	DDCS controller HW connection	Selects the topology of the fiber optic link with an external controller.	Star
	Ring	The devices are connected in a ring topology. Forwarding of messages is enabled.	0
	Star	The devices are connected in a star topology (for example, through a branching unit). Forwarding of messages is disabled.	1

No.	Name/Value	Description	Def/FbEq16
60.56	DDCS controller baud rate	Selects the communication speed of the channel selected by parameter 60.51.	4 mbps
	1 mbps	1 megabit/second.	1
	2 mbps	2 megabit/second.	2
	4 mbps	4 megabit/second.	4
	8 mbps	8 megabit/second.	8
60.58	DDCS controller comm loss time	Sets a timeout for communication with the external controller. If a communication break lasts longer than the timeout, the control program generates a warning (DDCS controller comm loss). This only occurs if control is expected from the external controller. As a rule of thumb, this parameter should be set to at least 3 times the transmit interval of the controller. **Note:** • There is a 60-second boot-up delay immediately after power-up. During the delay, the communication break monitoring is disabled (but communication itself can be active). • With an AC 800M controller, the controller detects a communication break immediately but re-establishing the communication is done at 9-second idle intervals. Also note that the sending interval of a data set is not the same as the execution interval of the application task. On ModuleBus, the sending interval is defined by controller parameter Scan Cycle Time (by default, 100 ms).	100 ms
	0 … 60000 ms	Timeout for communication with external controller.	
60.64	Mailbox dataset selection	Selects the pair of data sets used by the mailbox service in the unit/controller communication.	Dataset 32/33
	Dataset 32/33	Data sets 32 and 33.	0
	Dataset 24/25	Data sets 24 and 25.	1

61 D2D and DDCS transmit data

No.	Name/Value	Description	Def/FbEq16
61 D2D and DDCS transmit data		Defines the data sent to the DDCS link. See also parameter group 60.	
61.51	Data set 11 data 1 selection	Parameters 61.51…61.74 preselect data to be sent in data sets 11, 13, 15, 17, 19, 21, 23 and 25 to the external controller. Parameters 61.101…61.124 display the data to be sent to the external controller. If no data has been preselected, the value to be sent can be written directly into these parameters. For example, this parameter preselects the data for word 1 of data set 11. Parameter 61.101 displays the selected data in integer format. If no data is preselected, the value to be sent can be written directly into parameter 62.101.	SW 16bit
	None	None.	0
	CW 16bit	Control Word (16 bits) (06.01)	1
	SW 16bit	Status Word (16 bits) (06.01)	4
	Fault word	Fault word (04.21)	1045

No.	Name/Value	Description	Def/FbEq16
	Warning word 1	Warning word 1 (04.31)	1055
	Warning word 2	Warning word 2 (04.32)	1056
	DI status	DI status (06.20)	1556
	Coolant temperature	Coolant temperature (01.23)	279
	Inlet pressure	Inlet pressure (01.01)	257
	Outlet pressure	Outlet pressure (01.02)	258
	Pressure difference	Pressure difference (01.03)	259
	Cabinet temperature	Cabinet temperature (01.21)	277
	Ambient temperature	Ambient temperature (01.22)	278
	Other…	Other source. See Terms and abbreviations (page 93).	
61.52	Data set 11 data 2 selection	Preselects the data to be sent as word 2 of data set 11 to the external controller. See also parameter 61.102. For the selections, see parameter 61.51.	Fault word
	…	…	…
61.53	Data set 11 data 3 selection	Preselects the data to be sent as word 3 of data set 11 to the external controller. See also parameter 61.103. For the selections, see parameter 61.51.	Warning word 1
	…	…	…
61.54	Data set 13 data 1 selection	See parameter 61.51.	Warning word 2
61.55	Data set 13 data 2 selection	See parameter 61.51.	DI status
61.56	Data set 13 data 3 selection	See parameter 61.51.	Coolant temperature
61.57	Data set 15 data 1 selection	See parameter 61.51.	Inlet pressure
61.58	Data set 15 data 2 selection	See parameter 61.51.	Outlet pressure
61.59	Data set 15 data 3 selection	See parameter 61.51.	Pressure difference
61.60	Data set 17 data 1 selection	See parameter 61.51.	Cabinet temperature
61.61	Data set 17 data 2 selection	See parameter 61.51.	Ambient temperature
61.62	Data set 17 data 3 selection	See parameter 61.51.	None
	…	…	…
61.74	Data set 25 data 3 selection	See parameter 61.51.	None
61.101	Data set 11 data 1 value	Displays (in integer format) the data to be sent to the external controller as word 1 of data set 11. If no data has been preselected by 61.51 selection, the value to be sent can be written directly into this parameter.	0
	0…65535	Data to be sent as word 1 of data set 11.	

No.	Name/Value	Description	Def/FbEq16
61.102	Data set 11 data 2 value	Displays (in integer format) the data to be sent to the external controller as word 2 of data set 11. If no data has been preselected by parameter 61.52, the value to be sent can be written directly into this parameter.	0
	0…65535	Data to be sent as word 2 of data set 11.	
61.103	Data set 11 data 3 value	Displays (in integer format) the data to be sent to the external controller as word 3 of data set 11. If no data has been selected by parameter 61.53, the value to be sent can be written directly into this parameter.	0
	0…65535	Data to be sent as word 3 of data set 11.	
61.104	Data set 13 data 1 value	Displays (in integer format) the data to be sent to the external controller as word 1 of data set 13. If no data has been selected by parameter 61.54, the value to be sent can be written directly into this parameter.	0
	0…65535	Data to be sent as word 1 of data set 13.	
	…	…	…
61.124	Data set 25 data 3 value	Displays (in integer format) the data to be sent to the external controller as word 3 of data set 25. If no data has been selected by parameter 61.74, the value to be sent can be written directly into this parameter.	0
	0…65535	Data to be sent as word 3 of data set 25.	

62 D2D and DDCS receive data

No.	Name/Value	Description	Def/FbEq16
62 D2D and DDCS receive data		Mapping of data received through the DDCS link. See also parameter group 60 DDCS communication.	
62.51	Data set 10 data 1 selection	Parameters 62.51…62.74 define a target for the data received in data sets 10, 12, 14, 16, 18, 20, 22 and 24 from the external controller. Parameters 62.101…62.124 display the data received from the external controller in integer format, and can be used as sources by other parameters. For example, this parameter selects a target for word 1 of data set 10. Parameter 62.101 Data set 10 data 1 value displays the received data in integer format, and can also be used as a source by other parameters.	CW 16bit
	None	None.	0
	CW 16bit	Control Word (16 bits) **Note:** To obey the commands of the DDCS link control word, cooling unit must also have DDCS selected as the control location. See parameter 20.03.	1
	Other…	Other source. See Terms and abbreviations (page 93).	-
62.52	Data set 10 data 2 selection	Defines a target for the data received as word 2 of data set 10. See also parameter 62.102. For the selections, see parameter 62.51.	None
62.53	Data set 10 data 3 selection	Defines a target for the data received as word 3 of data set 10. See also parameter 62.103. For the selections, see parameter 62.51.	None

No.	Name/Value	Description	Def/FbEq16
62.54	Data set 12 data 1 selection	See parameter 62.51.	None
	…	…	…
62.74	Data set 24 data 3 selection	See parameter 62.51.	None
62.101	Data set 10 data 1 value	Displays (in integer format) the data received from the external controller as word 1 of data set 10. A target for this data can be selected by parameter 62.51. The value can also be used as a source by another parameter.	0
	0…65535	Data received as word 1 of data set 10.	
62.102	Data set 10 data 2 value	Displays (in integer format) the data received from the external controller as word 2 of data set 10. A target for this data can be selected by parameter 62.52. The value can also be used as a source by another parameter.	0
	0…65535	Data received as word 2 of data set 10.	
62.103	Data set 10 data 3 value	Displays (in integer format) the data received from the external controller as word 3 of data set 10. A target for this data can be selected by parameter 62.53. The value can also be used as a source by another parameter.	0
	0…65535	Data received as word 3 of data set 10.	
62.104	Data set 12 data 1 value	Displays (in integer format) the data received from the external controller as word 1 of data set 12. A target for this data can be selected by parameter 62.54. The value can also be used as a source by another parameter.	0
	0…65535	Data received as word 1 of data set 12.	
	…	…	…
62.124	Data set 24 data 3 value	Displays (in integer format) the data received from the external controller as word 3 of data set 24. A target for this data can be selected by parameter 62.74. The value can also be used as a source by another parameter.	
	0…65535	Data received as word 3 of data set 24.	

96 System

No.	Name/Value	Description	Def/FbEq16
96 System		Language selection, access levels, macro selection, parameter save and restore, control unit reboot, user parameter sets, unit selection, data logger triggering, parameter checksum calculation, user lock.	

No.	Name/Value	Description	Def/FbEq16
96.01	Language	Selects the language of the parameter interface and other displayed information when viewed on the control panel. **Note:** Not all languages listed below are necessarily supported. This parameter does not affect the languages visible in the Drive Composer PC tool. (Those are specified under View – Settings.)	-
	Not selected	None	0
	English	English	1033
	Deutsch	German	1031
	Italiano	Italian	1040
	Español	Spanish	3082
	Português	Portuguese	2070
	Nederlands	Dutch	1043
	Français	French	1036
	Dansk	Danish	1030
	Suomi	Finnish	1035
	Svenska	Swedish	1053
	Русский	Russian	1049
	Polski	Polish	1045
	Czech	Czech	1029
	Chinese (Simplified, PRC)	Simplified Chinese	2052
	Türkçe	Turkish	1055
	Japanese	Japanese	1041
96.02	Pass code	Pass codes can be entered into this parameter to activate further access levels (see parameter 96.03 Access levels active) or to configure the user lock. Entering “358” toggles the parameter lock, which prevents the changing of all other parameters through the control panel or the Drive Composer PC tool. Change the default pass code to maintain a high level of cybersecurity. Keep the code in a safe place. ABB cannot disable the protection if the code is lost.	0
	0…99999999	Pass code	-
96.03	Access levels active	Shows which access levels have been activated by pass codes entered into parameter 96.02 Pass code. This parameter is read-only.	0001h
	0000h…FFFFh	Active access levels	-
96.06	Parameter restore	Restores the original settings of the control program, ie. parameter default values. This parameter cannot be changed while the unit is running.	Done
	Done	Restoring is completed	0
	Restore defaults	All editable parameter values are restored to default values, except • control panel/PC communication settings • I/O extension module settings • fieldbus adapter settings	8

No.	Name/Value	Description	Def/FbEq16
	Clear all	All editable parameter values are restored to default values, except control panel/PC communication settings. PC tool communication is interrupted during the restoring	62
	Reset all fieldbus settings	Fieldbus adapter and embedded fieldbus interface settings (parameter groups 50…58) are restored to default values. This will also restore the default settings of the fieldbus adapter if one is connected	32
96.07	Parameter save manually	Saves the valid parameter values to permanent memory. This parameter should be used to store values sent from a fieldbus, or when using an external power supply to the control board as the supply might have a very short hold-up time when powered off. **Note:** A new parameter value is saved automatically when changed from the PC tool or control panel but not when altered through a fieldbus adapter connection.	Done
	Done	Save completed	0
	Save	Save in progress	1
96.08	Control board boot	Reboots the control unit (without requiring a power off/on cycle). The value reverts to 0 automatically.	0
	0…1	1 = Reboot the control unit	1 = 1
96.24	Full days since 1st Jan 1980	Shows the number of full days passed since beginning of the year 1980. This parameter, together with 96.25 and 96.26 Time in ms within one minute makes it possible to set the date and time in the unit via the parameter interface from a fieldbus or application program. This may be necessary if the fieldbus protocol does not support time synchronization.	-
	1…59999	Days since beginning of 1980.	1 = 1
96.25	Time in minutes within 24 h	Shows the number of full minutes passed since midnight. For example, the value 860 corresponds to 2:20 pm. See parameter 96.24.	0 min
	1…1439	Minutes since midnight	1 = 1
96.26	Time in ms within one minute	Shows the number of milliseconds passed since last minute. See parameter 96.24.	0 ms
	0…59999	Number of milliseconds since last minute.	1 = 1
96.29	Time sync source status	Shows time source status word. This parameter is read-only	-
	0000h…FFFFh	See below for the bit assignments of the word.	1 = 1
b0	Time tick received	1 = 1st priority tick received: Tick has been received from 1st priority source.	No Tick
b1	Aux Time tick received	1 = 2nd priority tick received: Tick has been received from 2nd priority source	No Tick
b2	Tick interval is too long	1 = Yes: Tick interval too long (accuracy compromised).	No
b3	DDCS controller	1 = Tick received: Tick has been received from an external controller.	No Tick
b4	Master/Follower	1 = Tick received: Tick has been received through the master/follower link.	No Tick
b5	Reserved	Reserved	

No.	Name/Value	Description	Def/FbEq16
b6	D2D	1 = Tick received: Tick has been received through the drive-to-drive link.	No Tick
b7	Fbus A	1 = Tick received: Tick has been received through fieldbus adapter A.	No Tick
b8	Fbus B	1 = Tick received: Tick has been received through fieldbus adapter B.	No Tick
b9	EFB	1 = Tick received: Tick has been received through the embedded fieldbus interface.	No Tick
b10	Ethernet	1 = Tick received: Tick has been received through the Ethernet port on type BCU control unit. **Note:** The BCU control unit does not have Ethernet interface.	No Tick
b11	Panel link	1 = Tick received: Tick has been received from the control panel, or Drive Composer PC tool connected to the control panel.	No Tick
b12	Ethernet tool link	1 = Tick received: Tick has been received from Drive Composer PC tool through an FENA module.	No Tick
b13	Parameter setting	1 = Tick received: Tick has been set by parameters 96.24…96.26.	No Tick
b14	RTC	1 = RTC time in use: Time and date have been read from the real-time clock.	RTC time in use
b15	Drive On-Time	1 = Drive on-time in use: Time and date are displaying unit on-time.	Not used
96.61	User data logger status word	Provides status information on the user data logger.	0000b
	0000b…1111b	User data logger status word	
b0	Running	1 = The user data logger is running. The bit is cleared after the post-trigger time has passed.	0
b1	Triggered	1 = The user data logger has been triggered. The bit is cleared when the logger is restarted.	0
b2	Data available	1 = The user data logger contains data that can be read. Note that the bit is not cleared because the data is saved to the memory unit.	0
b3	Configured	1 = The user data logger has been configured. Note that the bit is not cleared because the configuration data is saved to the memory unit.	0
b4…b15	Reserved	Reserved	-
96.63	User data logger trigger	Triggers, or selects a source that triggers, the user data logger.	Off
	Off	0	0
	On	1 (triggers)	1
	Other	Other source. See Terms and abbreviations (page 93).	-
96.64	User data logger start	Starts, or selects a source that starts, the user data logger	Off
	Off	0	0
	On	1	1
	Other	Other source. See Terms and abbreviations (page 93).	-
96.65	Factory data logger time level	Selects the sampling interval for the factory data logger.	500µs

No.	Name/Value	Description	Def/FbEq16
	500µs	500 microseconds	500
	2ms	2 milliseconds	2000
	10ms	10 milliseconds	10000
96.100	Change user pass code	(Visible when user lock is open) To change the current user pass code, enter a new code into this parameter as well as 96.101. A warning will be active until the new pass code is confirmed. To cancel changing the pass code, close the user lock without confirming. To close the lock, enter an invalid pass code in parameter 96.02, activate parameter 96.08, or cycle the power. See section User lock (page 91).	10000000
	10000000… 99999999	New user pass code.	-
96.101	Confirm user pass code	(Visible when user lock is open) Confirms the new user pass code entered in 96.100.	
	10000000… 99999999	Confirmation of new user pass code.	-

<table>
<tr><th>No.</th><th>Name/Value</th><th>Description</th><th>Def/FbEq16</th></tr>
<tr><td>96.102</td><td>User lock functionality</td><td>(Visible when user lock is open)
Selects the actions or functionalities to be prevented by the user lock. Note that the changes made take effect only when the user lock is closed. See parameter 96.02.

Note: ABB recommends that you select all the actions and functionalities, unless otherwise required by the application.
<table>
<tr><th>Bit</th><th>Name</th><th>Information</th></tr>
<tr><td>0</td><td>Disable ABB access levels</td><td>1 = ABB access levels (service, advanced programmer, etc: see 96.03) disabled</td></tr>
<tr><td>1</td><td>Freeze parameter lock state</td><td>1 = Changing the parameter lock state prevented.</td></tr>
<tr><td>2</td><td>Disable file download</td><td>1 = Disable all file downloads and software download.</td></tr>
<tr><td>3</td><td>Disable FB write to hidden</td><td>1 = Access to parameters on disabled access levels from fieldbus prevented.</td></tr>
<tr><td>4, 5</td><td colspan="2">Reserved</td></tr>
<tr><td>6</td><td>Protect AP</td><td>1 = Disables uploading application program to PC. Making backup is disabled when the bit is set.</td></tr>
<tr><td>7</td><td>Disable panel bluetooth</td><td>1 = Panel bluetooth disabled.</td></tr>
<tr><td>8…10</td><td colspan="2">Reserved</td></tr>
<tr><td>11</td><td>Disable OEM access level 1</td><td>1 = OEM access level 1 disabled</td></tr>
<tr><td>12</td><td>Disable OEM access level 2</td><td>1 = OEM access level 2 disabled</td></tr>
<tr><td>13</td><td>Disable OEM access level 3</td><td>1 = OEM access level 3 disabled</td></tr>
<tr><td>14, 15</td><td colspan="2">Reserved</td></tr>
</table></td><td>0000h</td></tr>
<tr><td></td><td>0000h…FFFFh</td><td>Selection of actions to be prevented by user lock.</td><td>-</td></tr>
</table>

10

Fault tracing

Contents of this chapter

The chapter lists the warning and fault messages including possible causes and corrective actions. The causes of most warnings and faults can be identified and corrected using the information in this chapter. If the fault cannot be identified or corrected, contact an ABB service representative.

Warnings and faults are listed below in separate tables. Each table is sorted by warning/fault code.

Warnings

Code (hex)	Warning	Cause	What to do
A6E5	AI parametrization	The current/voltage hardware setting of an analog input does not agree with the parameter settings.	Identify the analog input with the setting conflict (auxiliary code for this warning). Adjust the hardware setting. **Note:** A reboot of the control unit is necessary to validate changes in the hardware settings. You can reboot the control unit by cycling the power or with parameter 96.08.
A7AA	Extension AI parametrization	The hardware current/voltage setting of an analog input (on an I/O extension module) does not agree with the parameter settings.	

Code (hex)	Warning	Cause	What to do
A7C1	FBA A communication	Programmable warning (50.02). Cyclical communication between cooling unit and fieldbus adapter A or between PLC and fieldbus adapter A is lost.	Examine the status of fieldbus communication. Refer to the user documentation of the fieldbus adapter module. Examine the settings of fieldbus adapter A parameters (50, 51 , 52 and 53). Examine the cable connections. Make sure that the communication master is able to communicate.
A7CA	DDCS controller comm loss	DDCS (fiber optic) communication between cooling unit and external controller is lost.	Examine the status of the controller. Refer to the user documentation of the controller. Examine the DDCS communication parameter settings (60). Examine the cable connections. If necessary, replace the cables.
A7EE	Control panel loss	Programmable warning (49.05). Control panel (or PC tool) has stopped communicating.	Examine the PC tool or control panel connection. Examine the control panel connector. Examine the mounting platform, if used. Disconnect and connect the control panel.
FF90	Inlet pressure	Programmable monitoring function (31.01). Inlet pressure is too low. Possible causes: • the minimum warning limit value is too high • there is leakage in the internal cooling circuit • the air pressure in expansion vessel is too low • the coolant temperature is too low.	If necessary, adjust the limit (parameter 31.01). Make sure that all bleed and drain valves in internal cooling circuit are closed. Examine the system for leakage and repair when necessary. Check the pressure in the expansion vessel and adjust when necessary. See Adjusting air pressure of the expansion vessel (page 50).
FF91	Outlet pressure	This is a programmable monitoring function (31.03). Outlet pressure is too high. Possible causes: • the pressure limit is too low • there is a closed valve in the cooling system • temperature in internal cooling circuit is too high • the heat exchanger is dirty, blocked or defective.	If necessary, adjust the limit (parameter 31.03). Check temperature in internal cooling circuit (01.23). Make sure that there is sufficient coolant flow in external cooling circuit. Examine the heat exchanger. If necessary, clean or replace it.

Code (hex)	Warning	Cause	What to do
FF92	Pressure difference	This is a programmable monitoring function (31.04). The pressure difference between pump outlet and inlet is too low. Possible causes: • the monitoring limit is too high • the phase order of the pump motor is incorrect (incorrect rotation direction) • pump does not operate correctly • a pump impeller is broken • a valve in the cooling circuit is closed.	If necessary, adjust the limit (parameter 31.04). Examine the phase order of the pump motor. If necessary, change the phase order. Examine the system for leakage. If there are leaks, repair them. Examine the pump. If you have a two-pump system, try to change the pump in duty. See parameters 20.01 and 20.02. If the pump is defective, replace it. Make sure that the cooling circuit is not blocked by a closed valve. After you correct the cause, reset the pressure difference monitoring function with parameter 31.20.
	1	Pump 1	Examine pump 1
	2	Pump 2	Examine pump 2
FF93	Inlet pressure sensor	Inlet pressure sensor is not connected or it is defective.	Make sure that the sensor is connected to the correct terminals. See the circuit diagrams. If the sensor is defective, replace it.
FF94	Outlet pressure sensor	Outlet pressure sensor is not connected or it is defective.	Make sure that the sensor is connected to the correct terminals. See the circuit diagrams. If the sensor is defective, replace it.
FF95	Coolant leakage	There is a coolant leak in the cooling unit, or the leakage detector is defective.	Repair the leak. Dry the detector and the bottom of the cooling unit. If necessary, remove the leakage detector, open the enclosure and dry the sensor. If the leakage detector is defective, replace it. **Note:** You can change the indication type (fault or warning) with parameter 31.06.
FF96	Pump MCB	The protective circuit breaker of the pump motor has tripped. Possible causes: • the user opened the breaker manually • the breaker detected an overload • the breaker detected a short-circuit.	Examine auxiliary code to identify breaker: "1" = pump 1, "2" = pump 2. Close the breaker. Try to start the pump. In a two pump system you may need to define the pump in operation first. See parameters 20.01 and 20.02. Examine the pump and the pump motor cabling.

Code (hex)	Warning	Cause	What to do
FF97	Pressure difference low	This is a programmable monitoring function (31.04). Pump pressure difference is too low. Possible causes: • the limit for the monitoring function is too high • the pump is defective • there is leakage.	If necessary, adjust the limit (parameter 31.04). Examine the system for leaks and repair. Examine the system for leakage and repair when necessary. Examine the pump. If you have a two-pump system, try to change the pump in duty. See parameters 20.01 and 20.02. If the pump is defective, replace it. After you have corrected the root cause, reset the pressure difference monitoring function with parameter 31.20.
FF98	Cabinet overtemperature	This is a programmable monitoring function (31.11). Cabinet temperature is too high. Possible causes: • the limit for the monitoring function is too low • ambient temperature is too high • the coolant temperature in the internal cooling circuit is too high.	If necessary, adjust the limit (parameter 31.11). Check ambient temperature vs. specification. See the technical data. Check the liquid temperature in internal cooling circuit (01.23). If it is too high, make sure that there is sufficient circulation both in the internal and external cooling circuits.
FF99	Ambient temperature below limit	This is a programmable monitoring function (31.12). Ambient temperature is too low. A temperature that is too low will cause condensation. If there is a risk of condensation, make sure that there is a cabinet heater in the cooling unit (option +G300).	If necessary, adjust the limit (parameter 31.12). Check the ambient temperature (01.22) vs. specification. See the technical data. Install optional cabinet heater if not yet installed.
FF9A	Ambient overtemperature	This is a programmable monitoring function (31.13). Ambient temperature is too high. Possible causes: • the limit for the monitoring function is too low • the ambient temperature is too high.	If necessary, adjust the limit (parameter 31.13). Make sure that the ambient temperature (see parameter 01.22) agrees with the specifications. See the technical data.
FF9B	Coolant temperature below limit	This is a programmable monitoring function (31.09). Coolant temperature in the internal cooling circuit is too low. Possible causes: • the limit for the monitoring function is too low • the ambient temperature is too low, and the drive load is low at the same time.	If necessary, adjust the limit (parameter 31.09). Make sure that the ambient temperature (see parameter 01.22) agrees with the specifications. See the technical data. Make sure that the coolant temperature (see parameter 01.23) agrees with the specifications. See the technical data.

Code (hex)	Warning	Cause	What to do
FF9C	Coolant overtemperature	This is a programmable monitoring function (31.10). Coolant temperature in the internal cooling circuit is too high. Possible causes: • the limit for the monitoring function is too high • the circulation in external circuit is too low • the cooling capacity vs. drive size and load is too low • the heat exchanger is dirty, blocked or defective.	If necessary, adjust the limit (parameter 31.10). Make sure that there is sufficient circulation in the external cooling circuit. Check the cooling unit cooling capacity vs. drive size and load. Examine the heat exchanger. If necessary, clean or replace it.
FF9D	Coolant temperature sensor	Coolant temperature sensor is not connected or it is defective.	Make sure that the sensor is connected to the correct terminals. See the circuit diagrams. If the sensor is defective, replace it.
FF9E	Cabinet temperature sensor	Cabinet temperature sensor is not connected or it is defective.	Make sure that the sensor is connected to the correct terminals. See the circuit diagrams. If the sensor is defective, replace it.
FF9F	Ambient temperature sensor	Ambient temperature sensor is not connected or it is defective.	Make sure that the sensor is connected to the correct terminals. See the circuit diagrams. If the sensor is defective, replace it.
FFA0	Fan control	The cooling fan of the ZCU control unit does not turn.	Examine the cooling fan wiring. If the fan is defective, replace it.
FFA1	Valve control limit	PI controller keeps 2-way control valve (option +C242) fully open. Possible causes: • the cooling capacity of the external cooling circuit is not sufficient • unsatisfactory operation of the external cooling circuit • the 2-way control valve is dirty, blocked or defective.	Make sure that the cooling capacity of the external cooling circuit is sufficient. Examine the coolant flow and temperature in the external cooling circuit. Examine the 2-way control valve. If necessary, clean or replace it.

Faults

Code (hex)	Fault	Cause	What to do
5E03	XSTO circuit open	The circuit between control unit terminals XSTO:OUT and XSTO:IN1/XSTO:IN2 is open.	Make sure that the wires between terminals OUT and IN1/IN2 are correctly installed.
64FF	Fault reset	Informative fault.	An active fault has been reset.
7081	Control panel loss	This is a programmable monitoring function (49.05). Control panel (or PC tool) has stopped communicating.	Examine the PC tool or control panel connection. Examine the control panel connector. Examine mounting platform, if used. Disconnect and connect the control panel.

Code (hex)	Fault	Cause	What to do
7082	Ext I/O comm loss	The I/O extension module types specified by parameters do not agree with the detected configuration.	Examine the auxiliary code (format XXYY YYYY). “XX” specifies the number of the I/O extension module (02: 15 I/O extension module 2 2, 03: 16 I/O extension module 3). “YY YYYY” indicates the problem (see actions for each code below).
	00 0001	Communication with the module failed.	Make sure that the module is correctly installed into its slot. Make sure that the module and the slot connector are not damaged. Try installing the module into another slot.
	00 0002	Module not found.	Make sure that the type and location settings of the modules are correct (parameters 15.01, 15.02, 16.01, 16.02). Make sure that the module is correctly installed into its slot. Make sure that the module and the slot connector are not damaged. Try installing the module into another slot.
	00 0003	Configuration of module failed.	
	00 0004	Configuration of module failed.	
7510	FBA A communication	This is programmable warning (50.02). Cyclical communication between cooling unit and fieldbus adapter A or between PLC and fieldbus adapter A is lost.	Examine the status of fieldbus communication. Refer to the user documentation of the fieldbus adapter module. Examine the settings of fieldbus adapter A parameters (50, 51 , 52 and 53). Examine the cable connections. Make sure that the communication master is able to communicate.
FF00	Coolant leakage	There is a coolant leak in the cooling unit, or the leakage detector is defective.	Repair the leak. Dry the detector and the bottom of the cooling unit. If necessary, remove the leakage detector, open the enclosure and dry the sensor. If the leakage detector is defective, replace it. **Note:** You can change the indication type (fault or warning) with parameter 31.06.
FF01	Inlet pressure	Programmable monitoring function (31.02). Inlet pressure is too low. Possible causes: • the minimum warning limit value is too high • there is leakage in the internal cooling circuit • the air pressure in expansion vessel is too low • the coolant temperature is too low.	If necessary, adjust the limit (parameter 31.02). Make sure that all bleed and drain valves in internal cooling circuit are closed. Examine the system for leakage and repair when necessary. Check the pressure in the expansion vessel and adjust when necessary. See Adjusting air pressure of the expansion vessel (page 50).

Code (hex)	Fault	Cause	What to do
FF02	Pressure difference	This is a programmable monitoring function (31.05). The pressure difference between pump outlet and inlet is too low. Possible causes: • the monitoring limit is too high • the phase order of the pump motor is incorrect (incorrect rotation direction) • pump does not operate correctly • a pump impeller is broken • a valve in the cooling circuit is closed.	If necessary, adjust the limit (parameter 31.05). Examine the phase order of the pump motor. If necessary, change the phase order. Examine the system for leakage. If there are leaks, repair them. Examine the pump. If you have a two-pump system, try to change the pump in duty. See parameters 20.01 and 20.02. If the pump is defective, replace it. Make sure that the cooling circuit is not blocked by a closed valve. After you correct the cause, reset the pressure difference monitoring function with parameter 31.20.
FF03	Pumps failed	All pumps fail to start.	See warning Pump MCB.

Additional information

Indications

Warnings and faults

Warnings and faults indicate an abnormal drive/unit status. The codes and names of active warnings/faults are shown on the control panel and in the Drive Composer PC tool. Only the codes of warnings/faults are available over fieldbus.

It is not necessary to reset warnings. They stop showing when the cause of the warning is removed. Warnings do not trip the drive/unit and it will continue to operate.

It is necessary to reset faults. Faults cause the drive to trip. After the cause of the fault is removed, the fault can be reset from a selectable source (the control panel, Drive Composer PC tool, the digital inputs of the drive/unit, or fieldbus). After the fault is reset, the drive/unit can be restarted. Some faults require a reboot of the control unit. This information is given in the fault listing when applicable.

Editable messages

For some warnings and faults, the message text can be edited and instructions and contact information added. To edit these messages, choose **Menu - Settings - Edit texts** on the control panel.

Warning/fault history and analysis

Event logs

The unit has two event logs that can be accessed from the main menu on the control panel. The logs can also be accessed (and reset) with the Drive Composer PC tool.

One of the logs contains faults and fault resets. The other log lists warnings and pure events, as well as clearing entries. Both logs contain the 64 most recent events. All indications are stored in the event logs with a time stamp and other information.

Auxiliary codes

Some events generate an auxiliary code that often helps in finding the problem. The auxiliary code is shown on the control panel together with the message. It is also stored in the event log details. In the Drive Composer PC tool, the auxiliary code (if applicable) is shown in the event listing.

Factory data logger

The unit has a data logger that samples preselected values at 500-microsecond (default value, see parameter 96.65) intervals. By default, approximately 700 samples, recorded immediately before and after a fault, are saved to the memory unit. The fault data of the last five faults is accessible in the event log when viewed in the Drive Composer pro PC tool. The fault data is not accessible through the control panel.

Other data loggers

User data logger

A custom data logger can be configured with the Drive Composer pro PC tool. This functionality enables the free selection of up to eight parameters to be sampled at selectable intervals. The triggering conditions and the length of the monitoring period can also be defined by the user within the limit of approximately 8000 samples. In addition to the PC tool, the status of the logger is shown by parameter 96.61. The triggering sources can be selected by parameters 96.63 and 96.64. The configuration, status and collected data is saved to the memory unit for later analysis.

Parameters that contain warning/fault information

The unit can store a list of the active faults that caused the unit to trip. The faults are shown in parameter group **04 Warnings and faults**. The parameter group also shows a list of faults and warnings that occurred before.

QR code generation for mobile service application

The control panel can generate a QR code, which contains unit identification data, information on the latest events, and values of status and counter parameters. The user can read the code with a mobile device that has the ABB service application. The application sends the data to ABB for analysis. For more information on the application, contact your local ABB service representative.

Select **Menu - Assistants - QR code** on the control panel to generate a QR code.

11

Fieldbus control through a fieldbus adapter

Contents of this chapter

This chapter describes the fieldbus control and instructs how to set up the fieldbus communication.

System overview

The cooling unit can be connected to an external control system through an optional fieldbus adapter attached onto the control unit. The control program has two independent interfaces for fieldbus connection, called “fieldbus adapter A” (FBA A) and “fieldbus adapter B” (FBA B).

Note: This chapter describes the configuration of the fieldbus adapter A (FBA A). The second adapter, fieldbus adapter B (FBA B), if installed, is configured in a similar fashion. You can use fieldbus adapter B only for monitoring, not for control.

Fieldbus adapters are available for various communication systems and protocols.

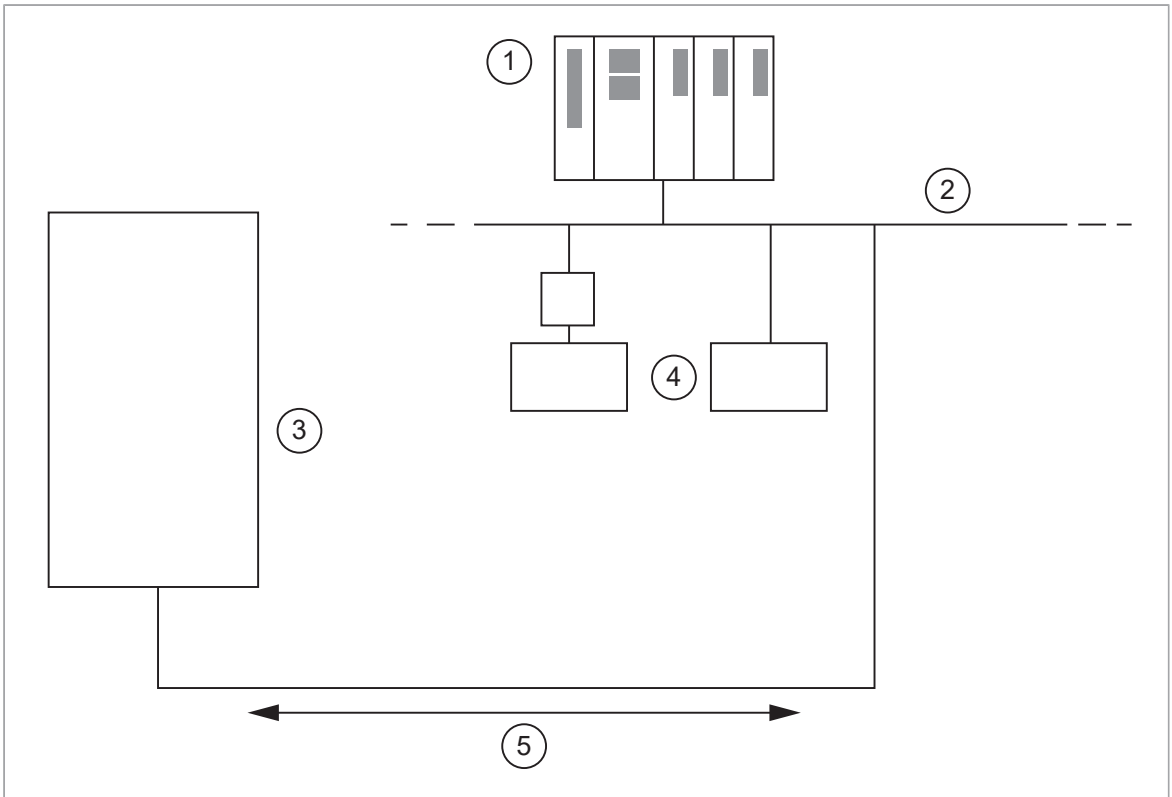

1	Fieldbus controller
2	Fieldbus network
3	Cooling unit with fieldbus adapter module installed on the control unit
4	Other devices
5	Cyclic data flow: • from fieldbus controller to cooling unit: control word (CW), reference ref1, reference ref2, and user-defined data words • from cooling unit to fieldbus controller: status word (SW), actual value act1, actual value act2, and user-defined data words Acyclic data flow: parameter read write requests and responses

Basics of the fieldbus control interface

The cyclic communication between the fieldbus system and the cooling unit consists of 16- or 32-bit input and output data words. The diagram below illustrates the fieldbus communication through the fieldbus adapter A interface.

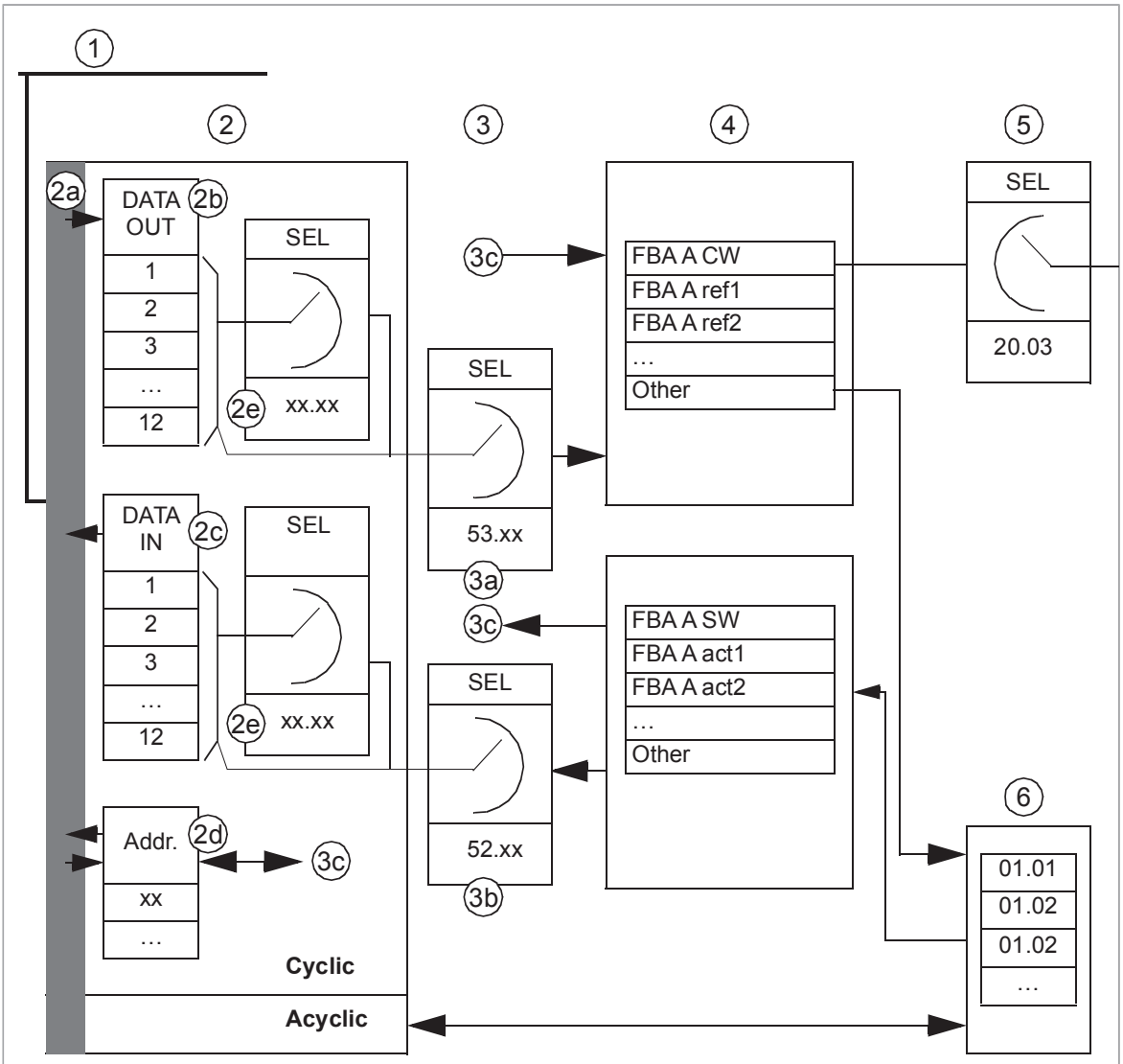

1	Fieldbus network
2	Fieldbus adapter module 2a: Fieldbus-specific interface 2b: Data out words - data transfer from fieldbus controller 2c: Data in words - data transfer to fieldbus controller 2d: Additional data words (if any) - data transfer to and from fieldbus controller. For more information, see the applicable fieldbus adapter module manual. 2e: Profile/instance selection parameters (fieldbus adapter module specific). For more information, see the applicable fieldbus adapter module manual.
3	Data transfer between fieldbus adapter module, and cooling unit: 3a: Selection of targets for the fieldbus data out words in the cooling unit control program (parameter group 53 FBA A data out) 3b: Selection of sources for the fieldbus data in words in the cooling unit control program (parameter group 52 FBA A data in) 3c: Additional data words (if any). For more information, see the appropriate fieldbus adapter module manual.
4	Fieldbus adapter A interface: control word, references (ref1 and ref2), status word, actual signals (act1 and act2), etc.
5	Selection of cooling unit control location
6	Cooling unit parameter table

Control word (CW) and Status word (SW)

The control word (CW) is the principal means for controlling the cooling unit from a fieldbus system. The fieldbus master station sends it to the cooling unit through the fieldbus adapter. The cooling unit switches between its states according to the bit-coded instructions in the control word. Cooling unit returns status information to the master in the fieldbus status word (SW).

The contents of the cooling unit control word and the status words are detailed in group 06.

When the user enables fieldbus adapter A (50.02):

- the fieldbus control word (CW) is written to the fieldbus A control word (FBA A CW), and further to the cooling unit control word (06.01)
- the cooling unit status word (06.11) is read to the fieldbus A status word (FBA A SW), and further to the fieldbus status word (SW).

Depending on the fieldbus adapter module type, either the fieldbus Data in1 and Data out1 words, or some additional data words are reserved for the transfer of CW and SW automatically. The user cannot affect on the transfer of the CW and SW, and the words used for their transfer. However, the user can define additional data transmissions by parameters in groups 52 FBA A data in and 53 FBA A data out.

Debugging the network words

You can enable a debug mode for the "fieldbus adapter A" to monitor raw (unmodified) content of the fieldbus data words. See parameters 50.12, … ,50.18.

Actual values act1 and act2

Actual values act1 and act2 are data words containing information on the operation of the unit. User selects the signals for actual values act1 and act2 for the fieldbus interface A by parameters in group 50 Fieldbus adapter (FBA).

Debugging the network words

You can enable a debug mode for the fieldbus adapter A to monitor raw (unmodified) content of fieldbus data word. See parameters 50.12, … ,50.18.

References ref1 and ref2

The cooling unit does not use user-defined reference signals. Thus the parameters related to the fieldbus references ref1 and ref2 are not connected in the cooling unit control program and they have no effect on the operation.

Setting up the cooling unit for fieldbus control (adapter A)

1. Install the fieldbus adapter module as instructed in the applicable fieldbus adapter module user's manual.
2. Power up the cooling unit.
3. Enable the communication between the cooling unit and the fieldbus adapter A (parameter 50.01).

4. Select how the cooling unit reacts to a fieldbus interface A communication break (parameter 50.02), and define the time between communication break detection and the selected action (parameter 50.03).
5. If necessary, tune also the values for the rest of the parameters in group 50 Fieldbus adapter (FBA). For example, you can define monitored cooling unit signals for the actual values act 1 and act 2 of the fieldbus adapter A (parameters 50.07, 50.10, 50.11).
6. Set the fieldbus adapter module A configuration parameters in group 51 FBA A settings. At a minimum, set the communication profile, and node address.
7. If necessary, define additional data transfers to and from the cooling unit (parameter groups 52 FBA A data in, 53 FBA A data out).
8. Save the valid parameter values to permanent memory with parameter 96.07.
9. Validate the settings made in parameter groups 51, 52 and 53 with parameter 51.27.
10. Select fieldbus adapter A as the cooling unit control location, that is, the source for the start/stop signal. (parameter 20.03).

12

Internal cooling circuit

Contents of this chapter

The cooling system of a liquid-cooled drive consists of two circuits: the internal cooling circuit and the external cooling circuit. The internal cooling circuit covers the heat-generating electrical components of the drive and transfers the heat to the cooling unit. In the cooling unit, the heat is transferred to the external cooling circuit which is usually part of a larger external cooling system. This chapter deals with the internal cooling circuit.

Applicability

The information in this chapter is applicable to cabinet-built ACS880 liquid-cooled drives. Except where otherwise indicated, the information is also applicable to drives built out of ACS880 liquid-cooled multidrives modules.

Internal cooling system

Each cubicle has an inlet and an outlet manifold, fitted with a stop valve and a drain valve. The stop valves can be closed to isolate all modules in the cubicle from the main cooling circuit.

In cabinet line-ups built by ABB, valves are color-coded:

- Blue – Open during operation
- Red – Closed during operation

The following diagram shows the coolant pipe connections in a drive system consisting of a supply unit and an inverter unit. Other units, such as brake units, DC/DC converter units have similar cooling arrangements. Other cubicles containing components that require cooling may also contain heat exchangers.

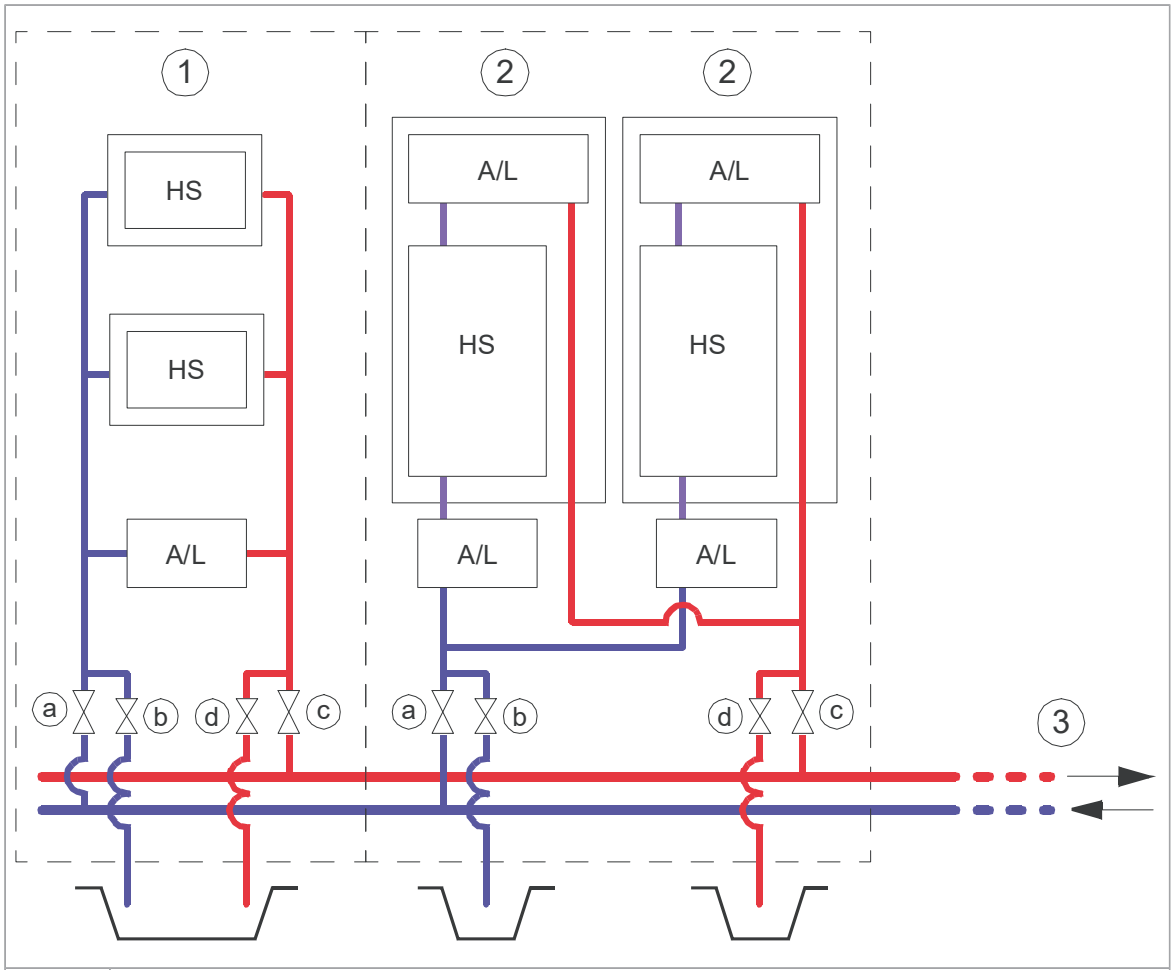

1	Supply modules. The drawing shows the configuration of a diode supply unit with two modules, ie. there is a common air-to-liquid exchanger in the cubicle. With an IGBT supply unit, each module has a dedicated air-to-liquid exchanger as shown for item 2.
2	Inverter modules
3	To/From cooling unit
A/L	Air-to-liquid heat exchanger
HS	Heat sink
a	Inlet valve
b	Inlet-side drain valve
c	Outlet valve
d	Outlet-side drain valve

The coolant used with ACS880 liquid-cooled drive systems is Antifrogen® L 25% or 50% mixture. See Coolant specification (page 145).

Maintenance intervals

As a general rule, the quality of the coolant should be checked at intervals of two years. This can be done by distributors of Antifrogen® L (see www.clariant.com) if a 250 milliliter sample is provided.

Technical data

Coolant specification

Coolant type

Antifrogen® L (by Clariant International Ltd, www.clariant.com) 25% or 50% mixture, available from Clariant distributors and ABB Service representatives.

Note: Do not dilute the coolant. It is ready to use.

Antifrogen® L 25% mixture is usable in storage temperatures down to -16 °C (3.2 °F). Antifrogen® L 50% mixture is usable in storage temperatures down to -40 °C (-40 °F).

Note that operation below 0 °C (32 °F) is not permitted regardless of the freezing point of the coolant.

WARNING!
The warranty does not cover damage that occurs from the use of incorrect coolant.

Temperature limits

Ambient temperature: See the technical data of the drive/unit.

Freeze protection: The freezing point of the coolant is determined by the concentration of heat transfer fluid in the mixture.

The higher the concentration of heat transfer fluid, the higher the viscosity of the coolant. This results in a higher pressure loss in the system. See Pressure limits (page 147).

The nominal current ratings of drive system modules apply to an Antifrogen® L / water solution of 25/75% (volume). With the Antifrogen® L concentration between 25% and 50%, the drive output current must be derated by 1/3 percentage point per 1 p.p. increase in Antifrogen® L concentration. The drawing below shows the derating factor *(k)* in relation to Antifrogen® L concentration.

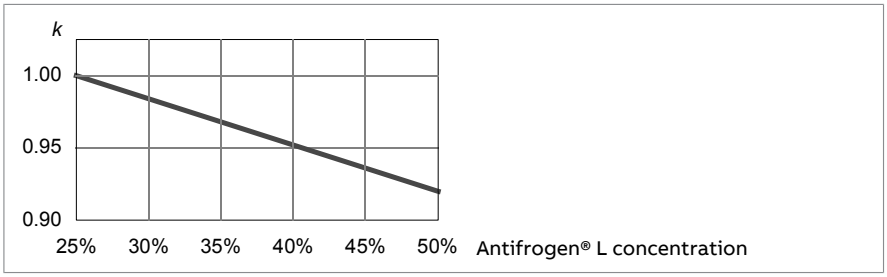

Incoming coolant temperature:

- 0…40 °C (32…104 °F): no drive output current derating required
- 40…45 °C (104…113 °F): drive output current must be derated by 2 percentage points per 1 °C (1.8 °F) temperature increase, as shown by curve (a).
- 45…50 °C (113…122 °F):
  - If components with a maximum operating temperature of 55 °C (131 °F) are installed in the same space as the drive modules, drive output current must be derated by 6 percentage points per 1 °C (1.8 °F) temperature increase, as shown by curve (c).
  - If there are no components with a maximum operating temperature of 55 °C (131 °F) installed in the same space as the drive modules, drive output current must be derated by 2 percentage points per 1 °C (1.8 °F) temperature increase, as shown by curve (b).

The drawing below shows the derating factor *(k)* in relation to coolant temperature.

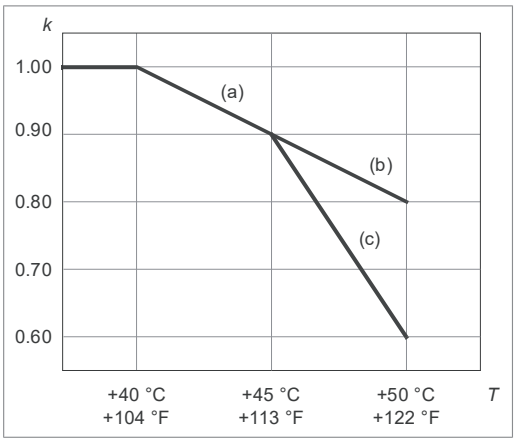

Condensation is not permitted. The minimum coolant temperature to avoid condensation (at an atmospheric pressure of 1 bar) is shown below as a function of relative humidity (RH) and ambient temperature (T_{air}).

T_{air} (°C)	Min. $T_{coolant}$ (°C)				
	RH = 95%	RH = 80%	RH = 65%	RH = 50%	RH = 40%
5	4.3	1.9	-0.9	-4.5	-7.4
10	9.2	6.7	3.7	-0.1	-3.0
15	14.2	11.5	8.4	4.6	1.5
20	19.2	16.5	13.2	9.4	6.0
25	24.1	21.4	17.9	13.8	10.5
30	29.1	26.2	22.7	18.4	15.0
35	34.1	31.1	27.4	23.0	19.4
40	39.0	35.9	32.2	27.6	23.8
45	44.0	40.8	36.8	32.1	28.2
50	49.0	45.6	41.6	36.7	32.8
55	53.9	50.4	46.3	42.2	37.1

T_{air} (°C)	Min. $T_{coolant}$ (°C)				
	RH = 95%	RH = 80%	RH = 65%	RH = 50%	RH = 40%
	= Not permitted as standard but the coolant temperature must be 0 °C (32 °F) or more.				
Example:	At an air temperature of 45 °C and relative humidity of 65% the coolant temperature must not be less than +36.8 °C				

Maximum temperature rise: Depends on heat losses and mass flow. Typically 10 °C (18 °F) with nominal losses and flow.

Pressure limits

Base pressure: 250 kPa (recommended); 300 kPa (maximum). “Base pressure” denotes the pressure of the system compared with the atmospheric pressure when the cooling circuit is filled with coolant.

Air counterpressure in expansion vessel (with ACS880-1007LC cooling unit): 80 kPa

Design pressure (PS): 600 kPa

Nominal pressure difference: 120 kPa with Antifrogen® L 25% coolant solution, 140 kPa with Antifrogen® L 50% coolant solution. This has to be taken into account when dimensioning the liquid cooling circuit.

Maximum pressure difference: 160 kPa

Coolant flow rate limits

The maximum coolant flow rate for all drive equipment is 1.3 × nominal. See the technical data chapter for nominal values.

Cooling circuit materials

Materials used in the internal cooling circuit are listed below.

- stainless steel AISI 316L (UNS 31603)
- heavy gauge aluminum
- plastic materials such as PA, PEX and PTFE

  Note: PVC hoses are not suitable for use with antifreeze.
- rubber gasketing NBR (nitrile rubber).

WARNING!
If you connect external piping to the internal cooling circuit, use only materials that are specified above. Other materials can cause galvanic corrosion. If the external piping contains other materials, use a cooling unit with a heat exchanger (for example, ACS880-1007LC) to keep the external piping separate from the internal cooling circuit.

13

Technical data

Contents of this chapter

This chapter contains the technical specifications of the cooling unit.

Nominal cooling power, losses and pressure drop

ACS880-1007LC-...	P_{max}		$P_{loss\ total}$		$P_{loss\ coolant}$		$P_{loss\ air}$	
	kW	hp	kW	hp	kW	hp	kW	hp
0070	70	94	0.4	0.5	0.3	0.4	0.1	0.1
0070+C242	70	94	0.4	0.5	0.3	0.4	0.1	0.1
0195+C140	195	261	1.3	1.7	1	1.3	0.3	0.4
0195+C141	195	261	1.3	1.7	1	1.3	0.3	0.4
0195+C213	195	261	2.1	2.8	1.8	2.4	0.3	0.4
0195+C242	195	261	2.1	2.8	1.8	2.4	0.3	0.4

Dimensions, weight and noise

Dimensions	See Dimension drawings (page 179).
Weight	ACS880-1007LC-0070: 200 kg (441 lbs) ACS880-1007LC-0070+C242: 280 kg (617 lbs) ACS880-1007LC-0195+C140: 310 kg (683 lbs) ACS880-1007LC-0195+C141: 366 kg (807 lbs) ACS880-1007LC-0195+C213: 373 kg (822 lbs) ACS880-1007LC-0195+C141+C242: 459 kg (1012 lbs)
Noise (Avg)	55 dB

Protection classes

Degree of protection (IEC/EN 60529)	IP42, IP54 (option +B055)
Overvoltage category (IEC 60664-1)	OVCII (with PD2)

Ambient conditions

Ambient temperature	0…55 °C (32…131 °F). No condensation or frost permitted.
Altitude	0…2000 m (0…6562 ft)

For more information, see the technical data of the drive.

Coolant flow and quantity

ACS880-1007LC-...	Internal flow[1]		External flow[2]		Internal volume		External volume		External coolant pressure loss	
	l/min	US gal/min	l/min	US gal/min	l	US gal	l	US gal	kPa	Psi
0070	81/107	21/28	120	32	17	4.5	3	0.8	150	22
0070+C242	81/107	21/28	120	32	17	4.5	8	2.1	180	22
0195+C140	270/355	71/93	467	124	31	8.2	8	2.1	150	22
0195+C141	270/355	71/93	467	124	35	9.2	8	2.1	150	22
0195+C213	310/415	81/109	467	124	35	9.2	8	2.1	150	22
0195+C242	310/415	81/109	467	124	35	9.2	13	3.4	180	26

[1] 120 kPa, Antifrogen® L 25%, 40 °C (104 °F), 50/60 Hz
[2] 36 °C (96.8 °F) water

Pump and pump motor

Unit type	ACS880-1007LC-0070	ACS880-1007LC-0195
Voltage code	+G434, +G436, +G437, +G454	+G434, +G436, +G437, +G454
Pump type	5SV04V0156T/D 2F	15SV02V0406T/D 2F
Motor type	SM90RB14/315	PLM112RB14S6/340 E3
Pump manufacturer	Lowara	Lowara
Motor power	1.5 kW	4 kW
Motor voltage and current (50 Hz)	Delta: 3~380 V ± 5%, 3.21 A / Star: 3~660 V ± 5%, 1.85 A Delta: 3~400 V ± 5%, 3.18 A / Star: 3~690 V ± 5%, 1.84 A	Delta: 3~380 V ± 5%, 7.80 A / Star: 3~660 V ± 5%, 4.50 A Delta: 3~400 V ± 5%, 7.62 A / Star: 3~690 V ± 5%, 4.40 A
Motor speed (50 Hz)	2885 rpm	2900 rpm
Motor voltage and current (60 Hz)	Delta: 3~380 V ± 5%, 3.05 A / Star: 3~660 V ± 5%, 1.76 A Delta: 3~400 V ± 5%, 2.80 A / Star: 3~690 V ± 5%, 1.61 A	Delta: 3~380 V ± 5%, 7.44 A / Star: 3~660 V ± 5%, 4.30 A Delta: 3~400 V ± 5%, 7.20 A / Star: 3~690 V ± 5%, 4.16 A

Unit type	ACS880-1007LC-0070	ACS880-1007LC-0195
Motor speed (60 Hz)	3505 rpm	3480 rpm

With external supply voltage 3~440 … 480 V/60 Hz (option +G455):

Unit type	ACS880-1007LC-0070	ACS880-1007LC-0195
Voltage code	+G455	+G455
Pump type	5SV04V0156T/D	15SV02V0406T/D
Motor type	SM80…/315 E3	PLM100…/340 E3
Pump manufacturer	Lowara	Lowara
Motor power	1.5 kW	4 kW
Motor voltage and current (60 Hz)	Delta: 3~440 V ± 5%, 2.8 A Delta: 3~480 V ± 5%, 2.82 A	Star: 3~440 V ± 5%, 6.78 A Star: 3~480 V ± 5%, 6.71 A
Motor speed (60 Hz)	3490/3510 rpm	3515/3530 rpm

With external supply voltage 3~460 V/60 Hz (option +G456):

Unit type	ACS880-1007LC-0070	ACS880-1007LC-0195
Approval	+C129 (UL) or +C134 (CSA)	+C129 (UL) or +C134 (CSA)
Voltage code	+G456	+G456
Pump type	5SV04V0156T/D	15SV02V0406T/D
Motor type	M3AA 90LB 2	M3AA 112MB 2
Pump manufacturer	Lowara	Lowara
Motor manufacturer	ABB	ABB
Motor power	1.5 kW	4 kW
Motor voltage and current (60 Hz)	Star: 3~460 V ± 10%, 2.4 A	Star: 3~460 V ± 10%, 6.2 A
Motor speed (60 Hz)	3522 rpm	3500 rpm

With external supply voltage 3~575 V/60 Hz (option +G457):

Unit type	ACS880-1007LC-0070	ACS880-1007LC-0195
Approval	+C129 (UL) or +C134 (CSA)	+C129 (UL) or +C134 (CSA)
Voltage code	+G457	+G457
Pump type	5SV04V0156T/D	15SV02V0406T/D
Motor type	M3AA 90LB 2	M3AA 112MB 2
Pump manufacturer	Lowara	Lowara
Motor manufacturer	ABB	ABB
Motor power	1.5 kW	4 kW
Motor voltage and current (60 Hz)	Star: 3~575V ± 10%, 1.96 A	Star: 3~575V ± 10%, 5 A
Motor speed (60 Hz)	3522 rpm	3500 rpm

Pump motor power supply

The user must connect the power supply for the pump motor(s). The table that follows gives the specifications.

Power, voltage and current	Refer to Pump and pump motor (page 150).
Supply voltage tolerance	± 5% (±10% for UL/CSA)
Supply network	TN system or IT system
Frequency	50 or 60 Hz ± 5% (±2% for UL/CSA)
Imbalance	Maximum 3% of nominal phase-to-phase voltage
Network quality	Maximum permitted voltage THD < 5% Maximum voltage spikes < 1800 V Maximum dV/dt < 2500 V/us
Fuse size and type	**IEC:** max. fuse 25 A gG / 16 A aM at 50 kA supply network **UL/CSA:** max. fuse 30 A, J type fuse at 10 kA supply network
Recommended conductor size (Cu)	**IEC:** ASC880-1007LC-0070: 1.5 mm^2 ASC880-1007LC-0195: 2.5 mm^2 ASC880-1007LC-0195+C213: 6 mm^2 **UL/CSA:** ASC880-1007LC-0070: 2.5 mm^2 (14 AWG) ASC880-1007LC-0195: 2.5 mm^2 (14 AWG) ASC880-1007LC-0195+C213: 6 mm^2 (10 AWG)
Cable voltage rating	min. 600 V AC cable for up to 500 V AC, min. 750 V AC cable for up to 600 V AC, min. 1 kV AC cable for above 600 V AC supply
Terminal size and tightening torque	0.75 … 10 mm^2 (18…8 AWG), 0.8 N·m (7.1 lbf·in)
Protective earth (PE) connection	Fixed
Residual current device (RCD)	Not recommended

Requirements for pump power supply (Q200)

ASC880-1007LC-…	S_p	$I_{p,max}$	Term. min.	Term. max.	Torque
	VA	A	mm^2 (AWG)	mm^2 (AWG)	N·m (lbf·in)
0070	1500	3.21	0.75 (18)	10 (8)	0.8 (7.1)
0195	4000	7.8	0.75 (18)	10 (8)	0.8 (7.1)
0195+C213	8000	15.6	0.75 (18)	10 (8)	0.8 (7.1)

ASC880-1007LC-…	3~380 … 480 V AC		3~660 … 690 V AC	
	I_{cb}	$I_{sc,min}$	I_{cb}	$I_{sc,min}$
	A	A	A	A
0070	2.5 … 4	54	1.6 … 2.5	44
0195	6.3 … 10	225	4 … 6.3	56
0195+C213	2 × 6.3 … 10	225	2 × 4 … 6.3	56

With option codes +C129 (UL) or +C134 (CSA):

ASC880-1007LC-...	3~460 … 480 V AC		3~575 … 600 V AC	
	I_{cb}	$I_{sc,min}$	I_{cb}	$I_{sc,min}$
	A	A	A	A
0070	1.6 … 2.5	44	1.6 … 2.5	44
0195	4 … 6.3	56	4 … 6.3	56
0195+C213	2 × 4 … 6.3	56	2 × 4 … 6.3	56

S_p	Apparent power when the cooling unit is running
$I_{p,max}$	Maximum continuous load current when the cooling unit is running
Term. min.	Minimum conductor size accepted by the input terminal (supply disconnecting device Q200)
Term. max	Maximum conductor size accepted by the input terminal (supply disconnecting device Q200)
Torque	Terminal tightening torque
I_{cb}	Current range rating of the internal motor circuit breaker
$I_{sc,min}$	Minimum short-circuit current. The user-defined power supply and cable must be able to supply this fault current to the cooling unit connection point when there is a short-circuit fault. The cable short-circuit protection must also limit the duration of the fault to less than 5 seconds (t < 5 s).

The user must dimension the supply cable according to local and national requirements. Cable size depends on upstream fuse, cable length, cable type, assembly method and ambient temperature. The short-circuit current available at the input terminals must be equal to, or more than the minimum short-circuit current $I_{sc,min}$.

Auxiliary power supply for the control circuits

Cooling unit in drive cabinet line-up (option +C138): Connected to the drive auxiliary voltage supply at the factory. No user connections are necessary.

Stand-alone cooling unit (option +C139): The user must connect the power supply for the control circuits. The table that follows gives the specifications.

Power	ACS880LC-1007-0070: 138 VA ACS880LC-1007-0195: 150 VA
Voltage and frequency	1~230 or 115 V AC ± 10%, 50 or 60 Hz ± 5%
Supply network	TN system. For IT system, consult ABB.
Fuse size and type	**IEC:** max. fuse 10 A gG at 50 kA supply network **UL/CSA:** max. fuse 6 A, J type fuse at 10 kA supply network
Recommended conductor size (Cu)	**IEC:** 1.5 mm^2 **UL/CSA:** 2.5 mm^2 (14 AWG)
Terminal size and tightening torque	0.75 … 10 mm^2 (18…8 AWG), 0.8 N·m (7.1 lbf·in)
Protective earth (PE) connection	Fixed
Residual current device (RCD)	Not recommended

Requirements for control circuit power supply (Q210)

ASC880-1007-...	S_R	S_{SB}	Term. min.	Term. max.	Torque
	VA	VA	mm² (AWG)	mm² (AWG)	N·m (lbf·in)
0070	138	126	0.75 (18)	10 (8)	0.8 (7.1)
0195	150	126	0.75 (18)	10 (8)	0.8 (7.1)

ASC880-1007-...	~230 V AC		~115 V AC	
	I_{cb}	$I_{sc,min}$	I_{cb}	$I_{sc,min}$
	A	A	A	A
0070	4	40	4	40
0195	4	40	4	40

S_R	Apparent power when the cooling unit is running (with 75% load of the 24 V DC power source)
S_{SB}	Apparent power when the cooling unit is at stand-by (with 75% load of the 24 V DC power source)
Term. min.	Minimum conductor size accepted by the input terminal (supply disconnecting device Q210)
Term. max	Maximum conductor size accepted by the input terminal (supply disconnecting device Q210)
Torque	Terminal tightening torque
I_{cb}	Current range rating of the internal miniature circuit breaker
$I_{sc,min}$	Minimum short-circuit current. The user-defined power supply and cable must be able to supply this fault current to the cooling unit connection point when there is a short-circuit fault. The cable short-circuit protection must also limit the duration of the fault to less than 5 seconds (t < 5 s).

The user must dimension the supply cable according to local and national requirements. Cable size depends on upstream fuse, cable length, cable type, assembly method and ambient temperature. The short-circuit current available at the input terminals must be equal to, or more than the minimum short-circuit current $I_{sc,min}$.

Power supply for the cabinet heater (option +G300) and lighting (option +G301)

Cooling unit in drive cabinet line-up (option +C138): Connected to the drive auxiliary voltage supply at the factory. No user connections are necessary.

Stand-alone cooling unit (option +C139): The user must connect the power supply for the cabinet heater and lighting. The table that follows gives the specifications.

Power	90 VA
Voltage and frequency	1~230 or 115 V AC ± 10%, 50 or 60 Hz ± 5%
Supply network	TN system. For IT system, consult ABB.
Fuse size and type	**IEC:** max. fuse 25 A gG at 50 kA supply network **UL/CSA:** max. fuse 15 A, J type fuse at 10 kA supply network
Recommended conductor size (Cu)	**IEC:** 1.5 mm² **UL/CSA:** 2.5 mm² (14 AWG)
Terminal size and tightening torque	0.75 … 10 mm² (18…8 AWG), 0.8 N·m (7.1 lbf·in)

Protective earth (PE) connection	Fixed
Residual current device (RCD)	Not recommended

Requirements for heating and lighting power supply (Q295)

ASC880-1007-...	S	Term. min.	Term. max.	Torque
	VA	mm^2 (AWG)	mm^2 (AWG)	N·m (lbf·in)
0070…0195	90	0.75 (18)	10 (8)	0.8 (7.1)

ASC880-1007-...	~230 V AC		~115 V AC	
	I_{cb}	$I_{sc,min}$	I_{cb}	$I_{sc,min}$
	A	A	A	A
0070…0195	4	40	4	40

S	Apparent power
Term. min.	Minimum conductor size accepted by the input terminal (supply disconnecting device Q295)
Term. max	Maximum conductor size accepted by the input terminal (supply disconnecting device Q295)
Torque	Terminal tightening torque
I_{cb}	Current range rating of the internal miniature circuit breaker
$I_{sc,min}$	Minimum short-circuit current. The user-defined power supply and cable must be able to supply this fault current to the cooling unit connection point when there is a short-circuit fault. The cable short-circuit protection must also limit the duration of the fault to less than 5 seconds (t < 5 s).

The user must dimension the supply cable according to local and national requirements. Cable size depends on upstream fuse, cable length, cable type, assembly method and ambient temperature. The short-circuit current available at the input terminals must be equal to, or more than the minimum short-circuit current $I_{sc,min}$.

Filling pump

Example pumps:

- Ridgid 1450 Pressure Test Pump. See www.ridgid.com.
- Rothenberger RP50 or TP25 Testing pump. See rothenberger.com.

Make sure that the hose and fitting are the correct type for the cooling unit connection.

Drain/fill/bleed hoses

The cooling unit delivery includes three hoses that can be used for draining, filling and bleeding coolant.

Length	3 m (9.8 ft)	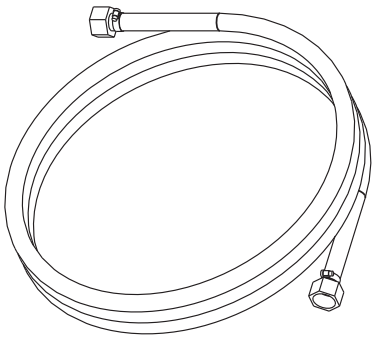
Diameter	15/13 mm	
Material	Urethane UL 94 V-1 (or equivalent)	
Connectors	R1/2" internal thread with flat sealing surface and gasket	

Drain box

The cooling unit delivery includes three drain boxes. The drain boxes are used when replacing the pump unit.

Material	Aluminum	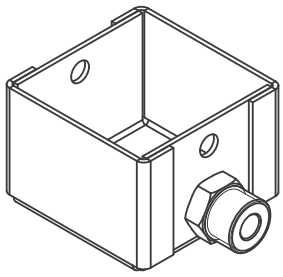
Connectors	G1/2" external thread	

Pipe flanges

The pipe flanges are combi flanges, which are dimensioned according to DIN 2633 / ANSI B 16.5. This type of combi flange contains two different flange types with 4 bolt holes each.

Use stainless steel bolts, nuts and washers of grade A4-80 or equivalent. Fasteners are not included in the drive delivery.

WARNING!
Use only the specified fastener types. If you use other types, corrosion damage and leakage can occur.

You must install a gasket between the flanges when you connect the piping. Select a gasket that is compatible with the flange and the coolant. Gaskets are not included in the drive delivery.

ACS880-1007LC-...	Flange type (DIN / ANSI)	Pipe size (DN / NPS)	Bolt size (DIN / ANSI)
External circuit			
0070	DIN 2633 PN 16 / ANSI B 16.5 Class 150	32 / 1 1/4"	M16 / 1/2"
0195	DIN 2633 PN 16 / ANSI B 16.5 Class 150	50 / 2"	M16 / 5/8"

ACS880-1007LC-...	Flange type (DIN / ANSI)	Pipe size (DN / NPS)	Bolt size (DIN / ANSI)
Internal circuit (stand-alone unit)			
0070	DIN 2633 PN 16 / ANSI B 16.5 Class 150	50 / 2"	M16 / 5/8"
0195	DIN 2633 PN 16 / ANSI B 16.5 Class 150	50 / 2"	M16 / 5/8"

Internal cooling circuit data

See section Technical data (page 145) in chapter Internal cooling circuit.

Control valve (V0016) setting and coolant flow

Control valve (V0016) setting and coolant flow, ACS880-1007LC-0070 with Antifrogen® L 25% at 120 kPA, 40 °C

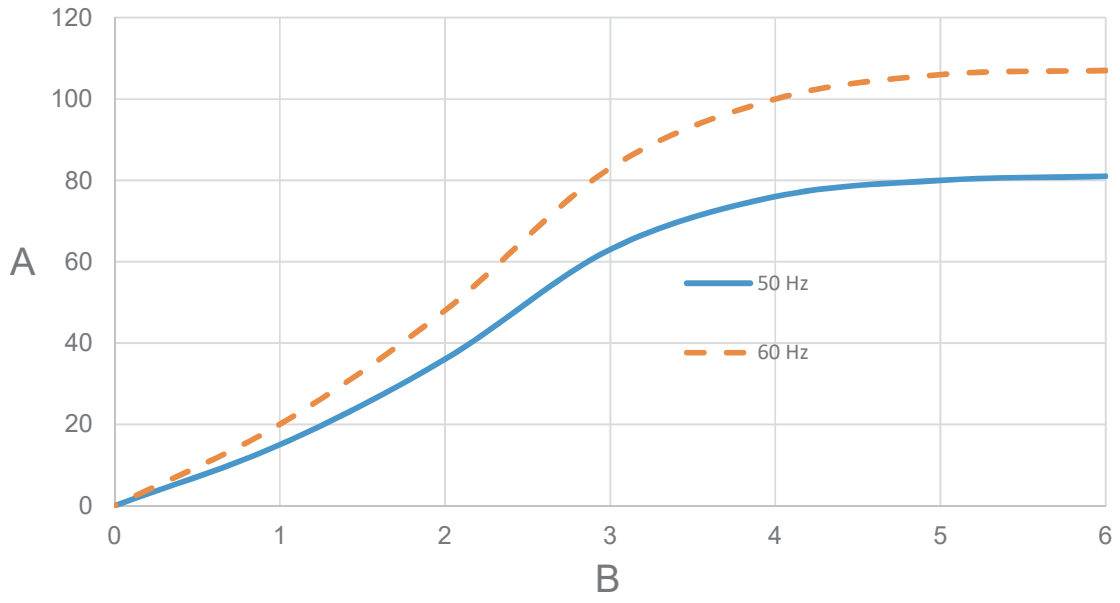

A	Coolant flow (l/min)
B	Set value

Control valve (V0016) setting and coolant flow, ACS880-1007LC-0195, redundant pump with Antifrogen® L 25% at 120 kPA, 40 °C

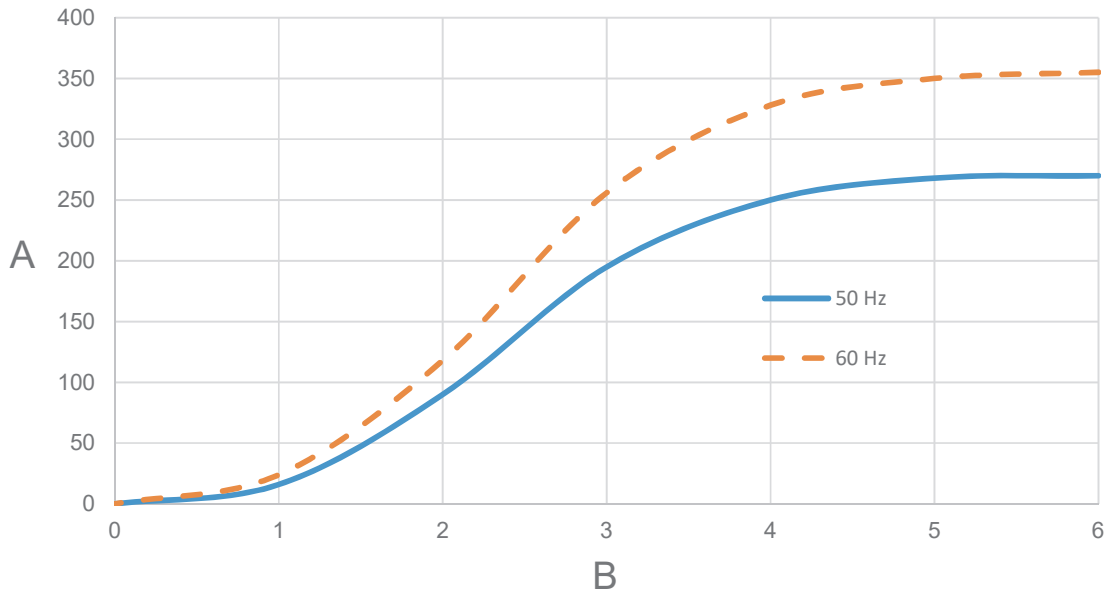

A	Coolant flow (l/min)
B	Set value

Control valve (V0016) setting and coolant flow, ACS880-1007LC-0195, two pumps running (option +C213) with Antifrogen® L 25% at 120 kPA, 40 °C

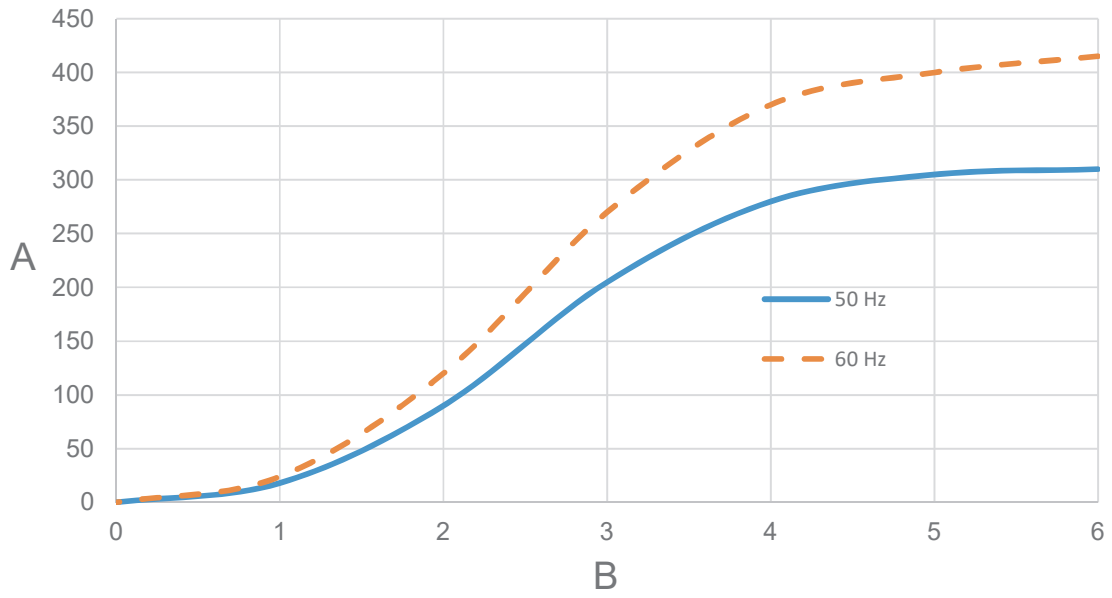

A	Coolant flow (l/min)
B	Set value

External cooling circuit data

Liquid quality for standard heat exchanger and piping

Industrial water suitable for stainless steel AISI 316 piping material is permitted. The liquid must not contain sediment, or organic or chemically active matter. The liquid can be treated with corrosion inhibitors suitable for AISI 316. For seawater heat exchanger the inhibitor must also be suitable for NBR rubber gaskets.

pH value	5 … 9.5
Chloride	< 100 mg/l
Sulphate	< 200 mg/l
Total hardness	< 2.5 mmol/l
Maximum particle size	1 mm
Total dissolved solids	< 500 mg/l

Seawater in the external circuit is permitted only if the cooling unit is equipped with seawater piping and heat exchanger (option +C146).

Temperature and pressure limits

Minimum inlet temperature (°C)	0
Nominal inlet temperature (°C)	36 [1)]
Maximum inlet temperature (°C)	46 [1)]
Maximum design pressure (kPa)	1 000
Maximum temperature variation (°C)	±7
Nominal difference in pressure (kPa)	150

1) If the coolant inlet temperature is above the nominal value in the external cooling circuit, this will be the case also in the internal cooling circuit of the drive. Thus, the drive output current must be derated. ABB derates it for the cabinet-installed drive deliveries. For the module installations, the system integrator must do it. See chapter Internal cooling circuit (page 143) for more information.

Recommended pipe size and material

Nominal size	ACS880-1007LC-0070: 42.2 mm (1 1/4”, DN32) ACS880-1007LC-0195: 60.3 mm (2”, DN50)
Recommended material	Stainless steel AISI 316. If the unit is equipped with a seawater heat exchanger (option +C146), the external cooling circuit material must also be seawater-resistant.

Heat exchanger pressure drop charts

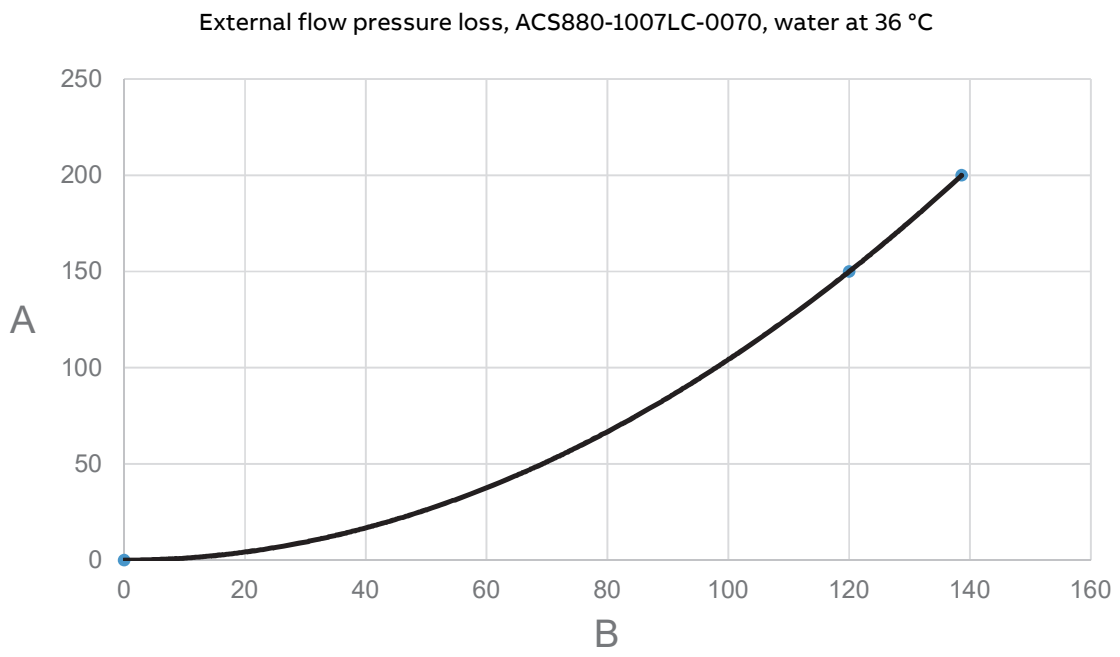

A	Pressure loss (kPa)
B	External flow (l/min)

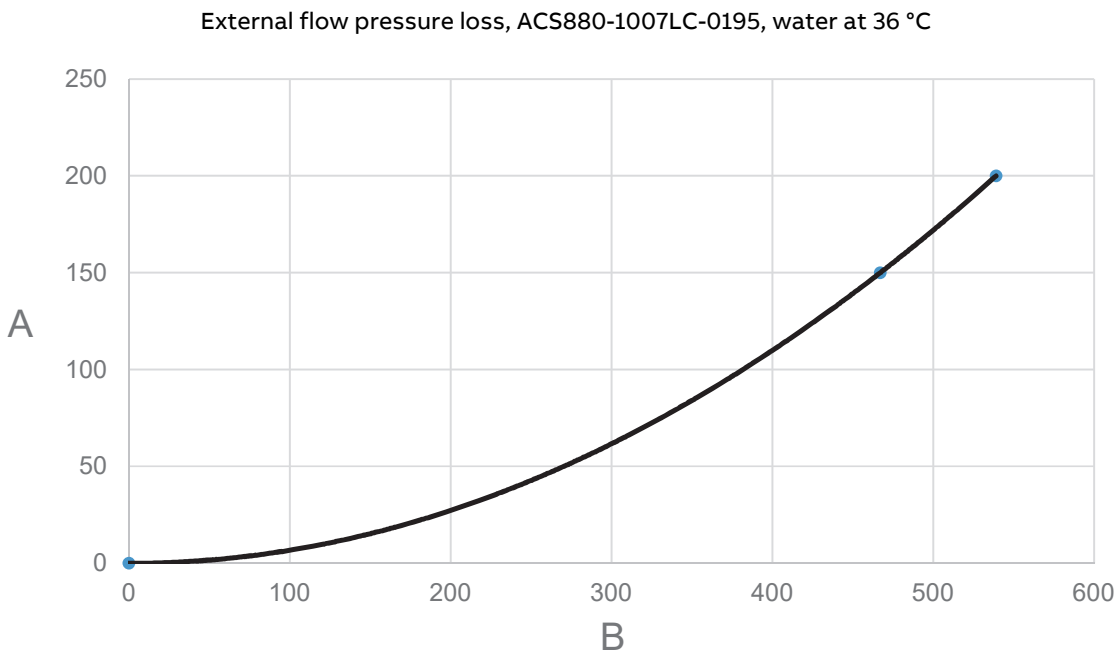

A	Pressure loss (kPa)
B	External flow (l/min)

Colors

RAL Classic 7035.

Materials

Liquid cooling unit

Refer to Recycling instructions and environmental information for ACS880 cabinet-installed drives and multidrives modules (3AXD50000153909 [English]).

Package materials for liquid cooling unit

- Plywood[1)]
- Wood
- PET (strapping)
- PE (VCI foil)
- Metal (fixing clamps, screws)
- VCI emitter capsules
- Clay desiccant.

1) Seaworthy package only

Package materials for options

- Cardboard
- Kraft paper
- PP (straps)
- PE (foil, bubble wrap)
- Plywood, wood (only for heavy components).

Materials vary according to the item type, size and shape. Typical package consists of a cardboard box with paper filling or bubble wrap. ESD-safe packing materials are used for printed circuit boards and similar items.

Manuals

Printed product manuals are recyclable paper. Product manuals are available on the Internet.

Disposal

The main parts of the drive can be recycled to preserve natural resources and energy. Product parts and materials should be dismantled and separated.

Generally all metals, such as steel, aluminum, copper and its alloys, and precious metals can be recycled as material. Plastics, rubber, cardboard and other packaging material can be used in energy recovery. Printed circuit boards and large electrolytic capacitors need selective treatment according to IEC 62635 guidelines. To aid recycling, plastic parts are marked with an appropriate identification code.

Contact your local ABB distributor for further information on environmental aspects and recycling instructions for professional recyclers. End of life treatment must follow international and local regulations. See ACS880 cabinet-installed drives and multidrives modules recycling instructions and environmental information (3AXD50000153909 [English]).

Applicable standards

For single drives, the applicable standards are given in the drive hardware manual.

For multidrives, the applicable standards are given in ACS880 liquid-cooled multidrives cabinets and modules electrical planning (3AXD50000048634 [English]).

Compliance with the Pressure Equipment Directive (PED)

The cooling unit has been designed, and it is manufactured in accordance with the Sound Engineering Practices (SEP) defined in the European Pressure Equipment Directive (PED). The SEP category equipment cannot be CE marked under the PED.

For the SEP, the customer-defined external cooling circuit must meet these criteria:

- maximum pressure is PS 10 bar
- maximum volume is 1000 l
- pipe diameter is smaller than DN200.

For the SEP, the internal cooling circuit must meet these criteria:

- maximum pressure is PS 6 bar
- maximum volume is 1600 l.

The internal cooling circuit meets the SEP criteria as standard when the cooling unit is in the drive cabinet line-up. For a stand-alone cooling unit with a customer-defined internal cooling circuit, the customer must make sure that the criteria will be met.

Disclaimers

Generic disclaimer

The manufacturer shall have no obligation with respect to any product which (i) has been improperly repaired or altered; (ii) has been subjected to misuse, negligence or accident; (iii) has been used in a manner contrary to the manufacturer’s instructions; or (iv) has failed as a result of ordinary wear and tear.

Cybersecurity disclaimer

This product can be connected to and communicate information and data via a network interface. The HTTP protocol, which is used between the commissioning tool (Drive Composer) and the product, is an unsecured protocol. For independent and continuous operation of product such connection via network to commissioning tool is not necessary. However it is Customer's sole responsibility to provide and continuously ensure a secure connection between the product and Customer network or any other network (as the case may be). Customer shall establish and maintain any appropriate measures (such as but not limited to the installation of firewalls, prevention of physical access, application of authentication measures, encryption of data, installation of anti-virus programs, etc.) to protect the product, the network, its system and the interface against any kind of security breaches, unauthorized access, interference, intrusion, leakage and/or theft of data or information.

Notwithstanding any other provision to the contrary and regardless of whether the contract is terminated or not, ABB and its affiliates are under no circumstances liable for damages and/or losses related to such security breaches, any unauthorized access, interference, intrusion, leakage and/or theft of data or information.

14

Piping and instrumentation diagrams

Contents of this chapter

This chapter contains piping and instrumentation diagrams of the cooling units.

ACS880-1007LC-0070

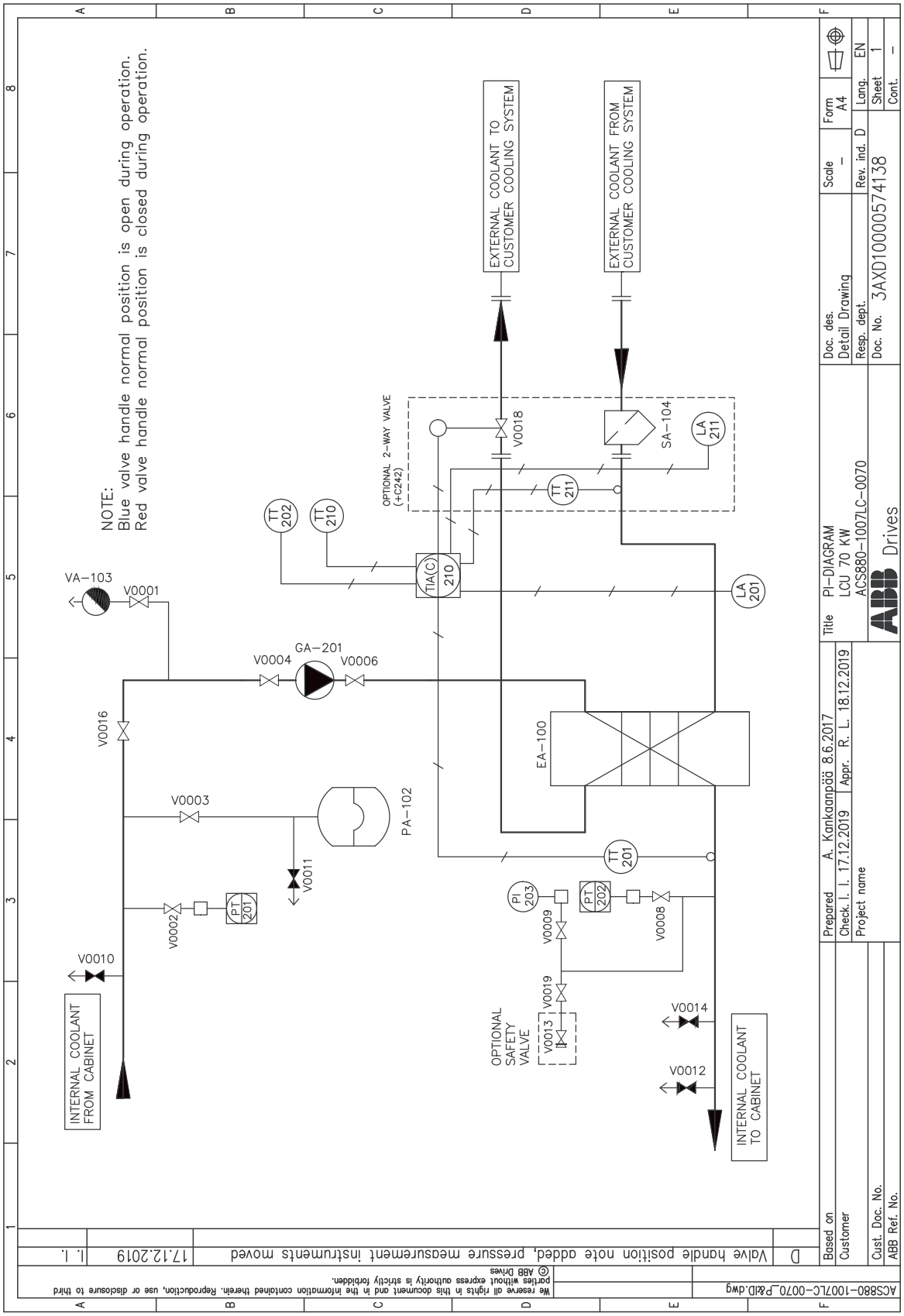

ACS880-1007LC-0070 component designations

The table below lists the component designations used in layout drawings, piping and instrumentation (PI) diagrams, and circuit diagrams.

Layout drawing	PI diagram	Circuit diagram	Description
1	-	-	Outlet to internal cooling circuit
2	-	-	Inlet from internal cooling circuit
3	-	-	Inlet from external cooling circuit
4	-	-	Outlet to external cooling circuit
5	-	-	Pump de-airing screw
GA-201	GA-201	-M201	Coolant pump 1
EA-100	EA-100	-	Heat exchanger
PA-102	PA-102	-	Expansion vessel
VA-103	VA-103	-	Automatic float air vent
PT-201	PT-201	-T201	Inlet pressure transmitter with low limit alarm
PT-202	PT-202	-T202	Outlet pressure transmitter
PI-203	PI-203	-	Coolant pressure gauge
-	TIA(C)-210	-	Coolant temperature indicator and alarm (and control with option +C242). This device is the LCU control unit.
TT-201	TT-201	-B201	Coolant temperature transmitter
TT-202	TT-202	-B202	Ambient temperature transmitter
TT-210	TT-210	(-A210)	Cabinet temperature transmitter
TT-211	TT-211	-B211	Coolant temperature transmitter if 2-way valve is installed (option +C242)
V0001	V0001	-	Shut-off valve for automatic float air vent
V0002	V0002	-	Pressure transmitter (PT-201) shut-off valve
V0008	V0008	-	Pressure transmitter (PT-202) shut-off valve
V0009	V0009	-	Pressure gauge (PI-203) shut-off valve
V0003	V0003	-	Expansion vessel shut-off valve
V0004, V0006	V0004, V0006	-	Pump shut-off valves
V0010	V0010	-	Drain/fill valve (internal circuit LCU inlet)
V0011	V0011	-	Expansion vessel bleed valve
V0012	V0012	-	Drain valve (internal circuit LCU outlet)
V0014	V0014	-	Fill valve (internal circuit LCU outlet)
V0013	V0013	-	Safety relief valve for UL (option +C129)
V0016	V0016	-	Control valve
V0018	V0018	-	Control valve if 2-way valve is installed (option +C242)
V0019	V0019	-	Shut off valve for the Safety relief valve (with option +C129 only)
-	SA-104	-	Strainer (with option +C242 only)
LA-201	LA-201	S201	Leakage detector
-	LA-211	S211	Leakage detector

ACS880-1007LC-0195

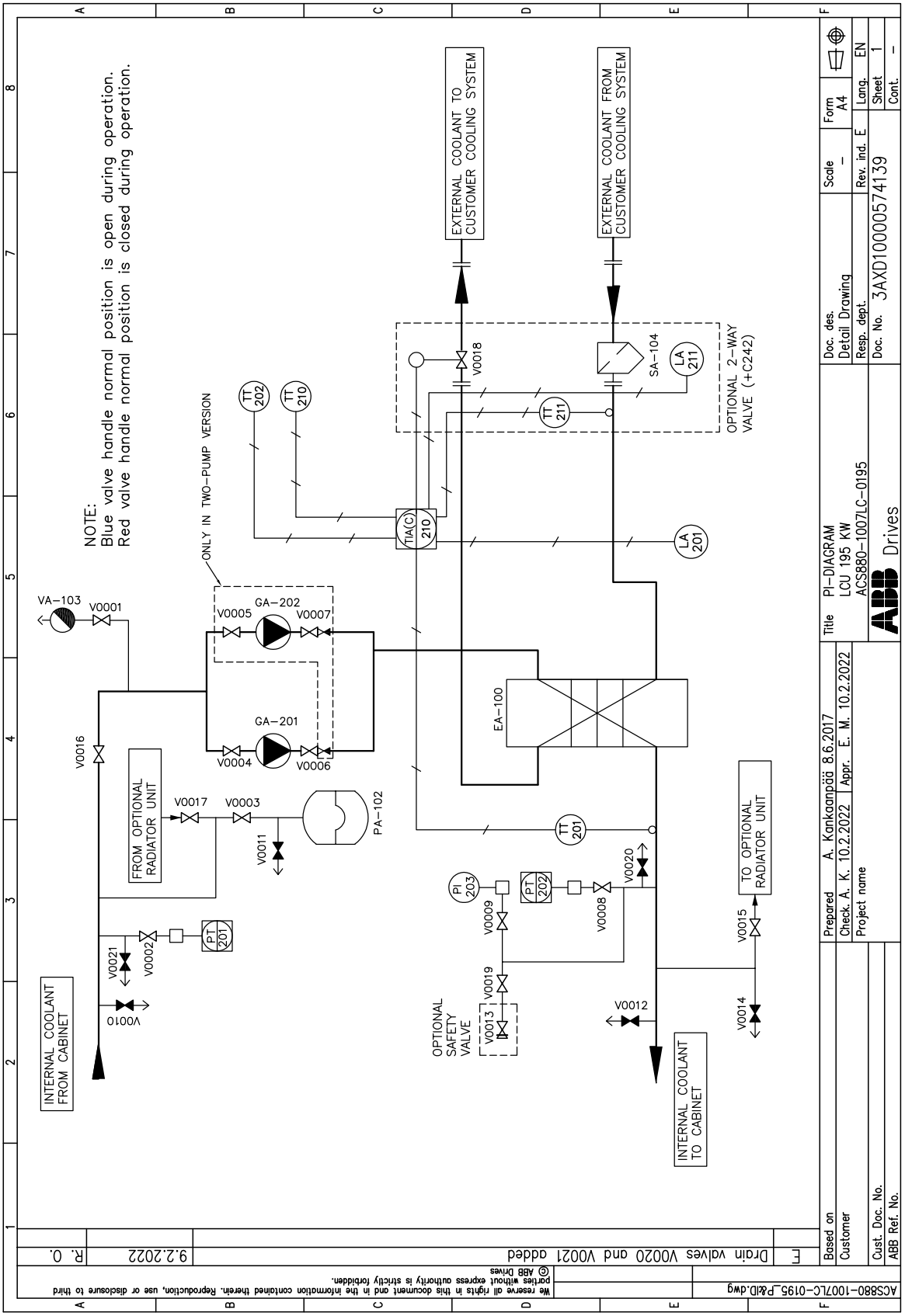

ACS880-1007LC-0195 component designations

The table below lists the component designations used in layout drawings, piping and instrumentation (PI) diagrams, and circuit diagrams.

Layout drawing	PI diagram	Circuit diagram	Description
1	-	-	Outlet to internal cooling circuit
2	-	-	Inlet from internal cooling circuit
3	-	-	Inlet from external cooling circuit
4	-	-	Outlet to external cooling circuit
5	-	-	Pump de-airing screw
EA-100	EA-100	-	Heat exchanger
GA-201	GA-201	-M201	Coolant pump 1
GA-202	GA-202	-M202	Coolant pump 2
LA-201	LA-201	S201	Leakage detector
-	LA-211	S211	Leakage detector
PA-102	PA-102	-	Expansion vessel
PT-201	PT-201	-T201	Inlet pressure transmitter with low limit alarm
PT-202	PT-202	-T202	Outlet pressure transmitter
PI-203	PI-203	-	Coolant pressure gauge
-	TIA(C)-210	-	Coolant temperature indicator and alarm (and control with option +C242)
TT-201	TT-201	-B201	Coolant temperature transmitter
TT-202	TT-202	-B202	Ambient temperature transmitter
TT-210	TT-210	(-A210)	Cabinet temperature transmitter
TT-211	TT-211	-B211	Coolant temperature transmitter in 2-way control valve cubicle (with option +C242 only)
VA-103	VA-103	-	Automatic float air vent
V0001	V0001	-	Shut-off valve for automatic float air vent
V0002	V0002	-	Pressure transmitter (PT-201) shut-off valve
V0003	V0003	-	Expansion vessel shut-off valve
V0004 … V0007	V0004 … V0007	-	Pump shut-off/check valves
V0008	V0008	-	Pressure transmitter (PT-202) shut-off valve
V0009	V0009	-	Pressure gauge (PI-203) shut-off valve
V0010	V0010	-	Drain/fill valve (internal circuit LCU inlet)
V0011	V0011	-	Expansion vessel bleed valve
V0012	V0012	-	Drain/fill valve (internal circuit LCU outlet)
V0013	V0013	-	Safety relief valve for UL (option +C129)
V0014	V0014	-	Fill valve (internal circuit LCU outlet)
V0015	V0015	-	Shut off valve for extra LCU cubicle cooler (with option +C213 only)
V0016	V0016	-	Control valve
V0017	V0017	-	Shut off valve for extra LCU cubicle cooler (with option +C213 only)
V0018	V0018	-	Control valve (option +C242)
-	SA-104	-	Strainer (with option +C242 only)

Layout drawing	PI diagram	Circuit diagram	Description
V0019	V0019	-	Shut off valve for the safety relief valve (with option +C129 only)
V0020 … V0021	V0020 … V0021	-	Drain valves for ABB internal testing use in production

15

Example circuit diagrams

Contents of this chapter

This chapter contains example circuit diagrams of the ACS880-1007LC-0070 cooling unit integrated in a drive cabinet line-up. The purpose of the diagrams is to help in understanding the operation of the cooling unit. The diagrams do not cover all possible details and variants and do not necessarily agree with the diagrams delivered with the drive.

WARNING!
Do not connect, test or measure a drive based on the circuit diagrams in this manual. Before you start the work on the electrical circuits of a drive, always refer to the delivery-specific circuit diagrams.

Unit designations:

- "=20" refers to the cooling unit in the drive cabinet line-up.
- "=01" refers to the supply unit in the drive cabinet line-up. The supply unit circuit diagrams are not shown in this manual.
- "=11" refers to the inverter unit in the drive cabinet line-up. The inverter unit circuit diagrams are not shown in this manual.

Circuit diagrams

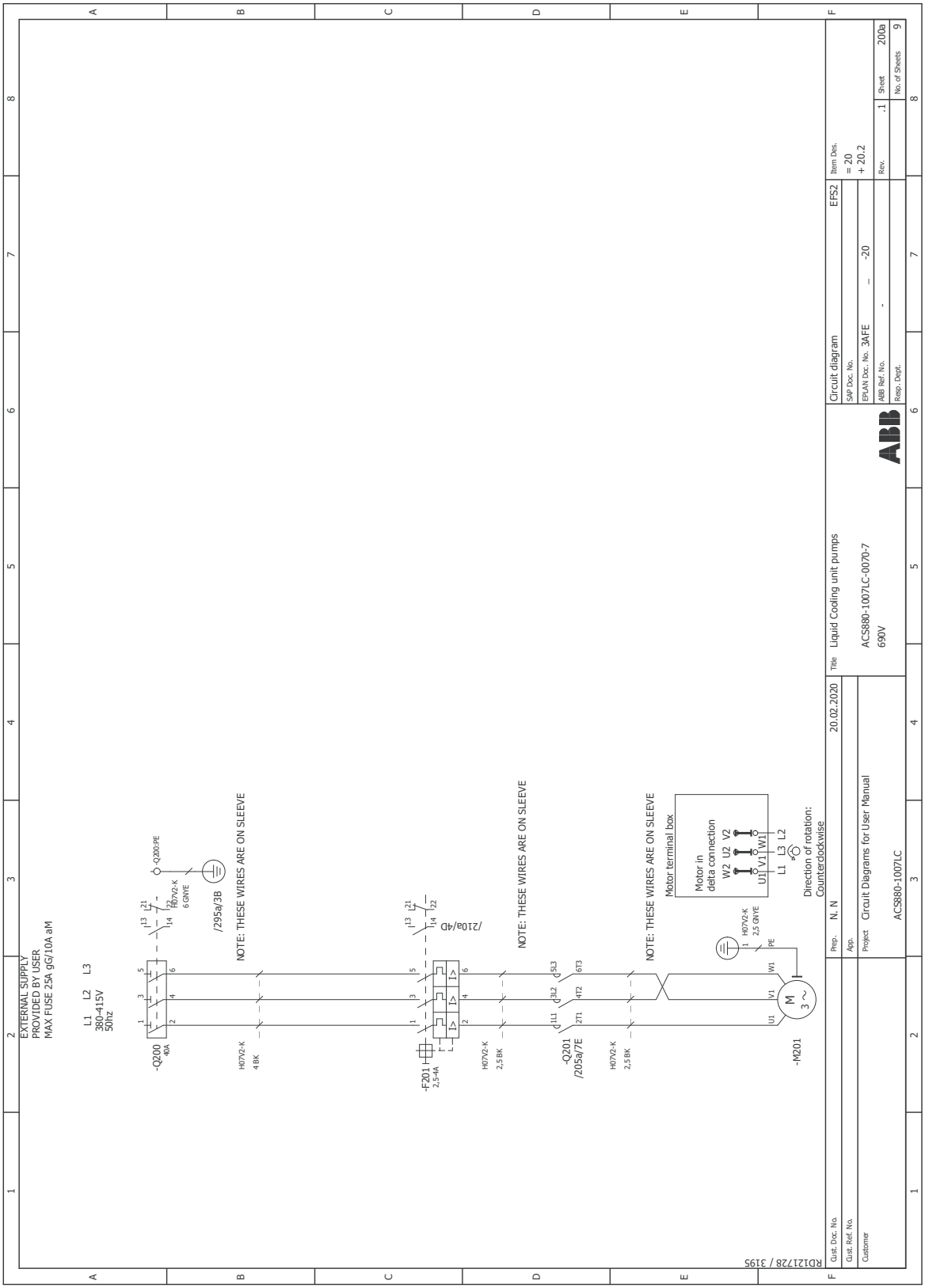

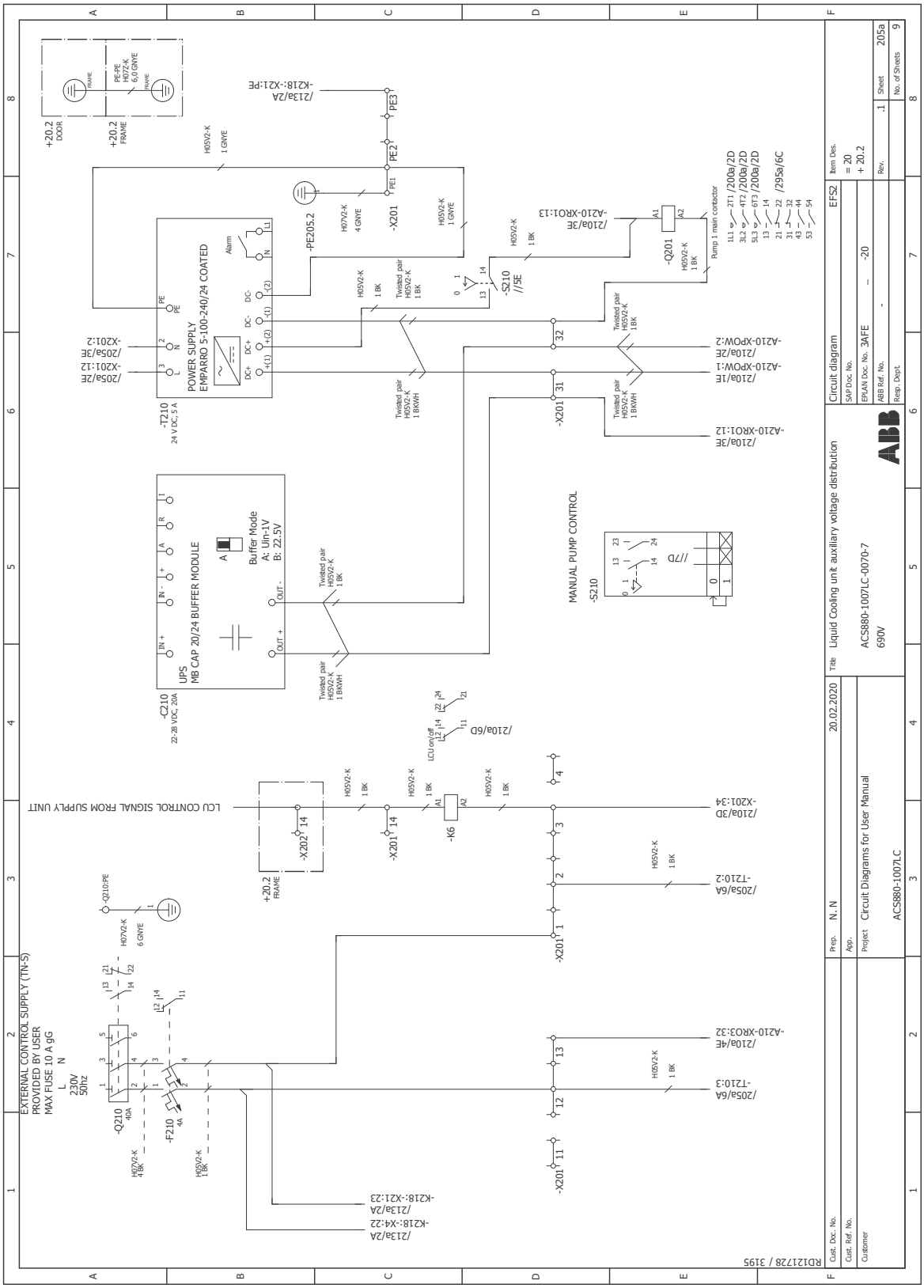
+20.2 DOOR
+20.2 FRAME
PE-PE H07Z-K 6.0 GNYE
FRAME
H05V2-K 1 GNYE
/213a/2A -K218:-X21:PE
PE3
PE2
PE1
-X201
-PE205.2
H07V2-K 4 GNYE
H05V2-K 1 GNYE
-T210
24 VDC, 5 A
POWER SUPPLY
EMPARRO 5-100-240/24 COATED
Alarm
PE
N
L
DC-
DC+
/205a/3E -XZ01:2
/205a/2E -XZ01:12
H05V2-K 1 BK
Twisted pair H05V2-K 1 BK
Twisted pair H05V2-K 1 BKWH
-S210 //5E
/210a/3E -A210-XRO1:13
-Q201
Pump 1 main contactor
1L1 2T1 /200a/2D
3L2 4T2 /200a/2D
5L3 6T3 /200a/2D
13 14
21 22 /295a/6C
31 32
43 44
53 54
-A210-XPOW:2 /210a/2E
-A210-XPOW:1 /210a/1E
-A210-XRO1:12 /210a/3E
-X201 31
32
-C210
22-28 VDC, 20A
UPS
MB CAP 20/24 BUFFER MODULE
Buffer Mode
A: Uin-1V
B: 22.5V
IN+
IN-
A
R
I
OUT+
OUT-
MANUAL PUMP CONTROL
-S210
//7D
/210a/6D
LCU on/off
LCU CONTROL SIGNAL FROM SUPPLY UNIT
-X202 14
-X201 14
-K6
A1
A2
/210a/3D -XZ01:34
/205a/6A -T210:2
-X201 1
/210a/4E -A210-XRO3:32
/205a/6A -T210:3
-X201 11
-X201 12
13
-Q210:PE
H07V2-K 6 GNYE
EXTERNAL CONTROL SUPPLY (TN-S)
PROVIDED BY USER
MAX FUSE 10 A gG
N
L
230V
50Hz
-Q210
40A
-F210
4A
H07V2-K 4 BK
/213a/2A -K218:-X21:23
/213a/2A -K218:-X4:22
RD1217 28 / 3195
Item Des.
= 20
+ 20.2
EFS2
Circuit diagram
SAP Doc. No.
EPLAN Doc. No. 3AFE
ABB Ref. No.
Resp. Dept
Rev.
.1
Sheet
205a
No. of Sheets
9
Title
Liquid Cooling unit auxiliary voltage distribution
ACS880-1007LC-0070-7
690V
20.02.2020
Prep.
N. N
App.
Project
Circuit Diagrams for User Manual
ACS880-1007LC
Cust. Doc. No.
Cust. Ref. No.
Customer

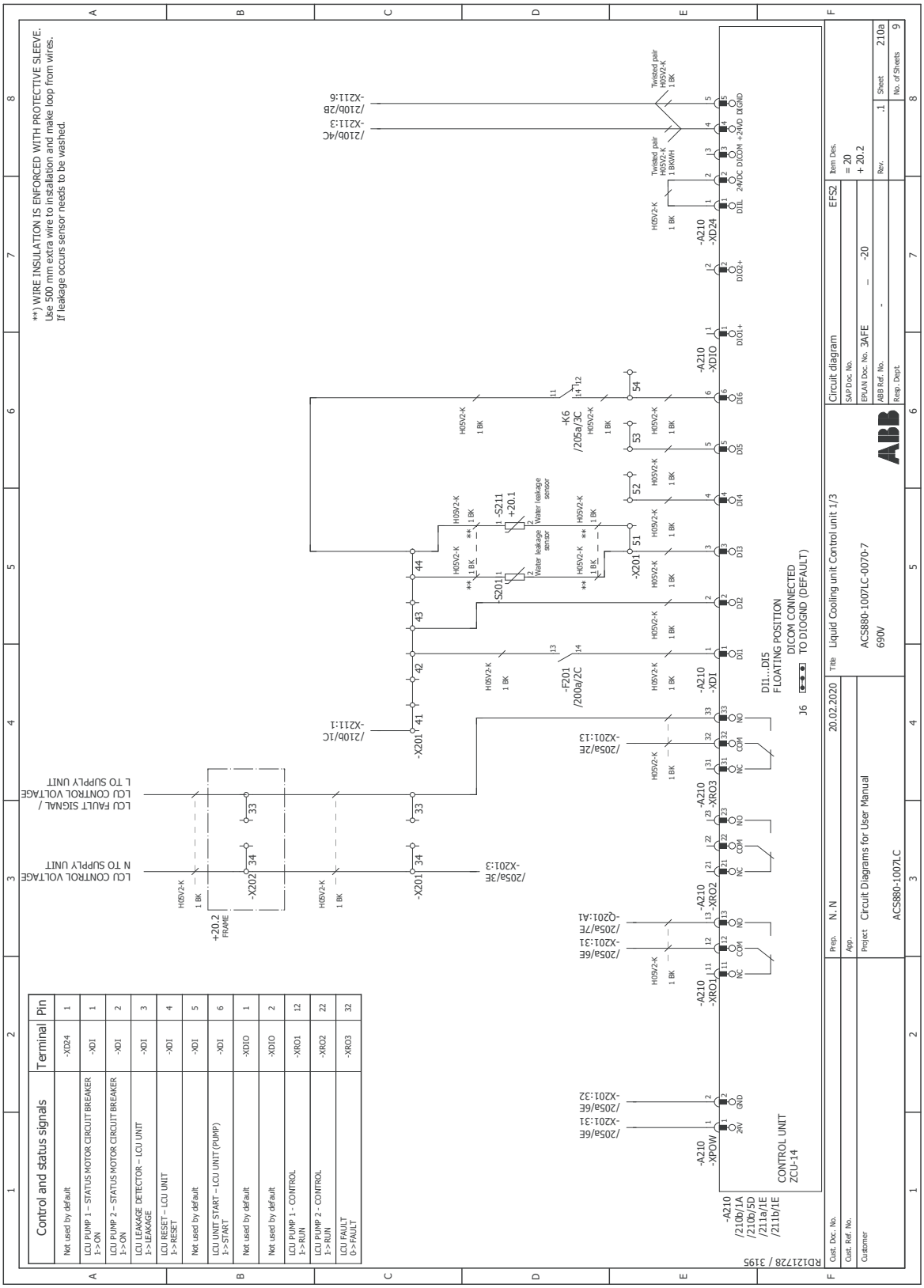
**) WIRE INSULATION IS ENFORCED WITH PROTECTIVE SLEEVE.
Use 500 mm extra wire to installation and make loop from wires.
If leakage occurs sensor needs to be washed.
Control and status signals
Terminal
Pin
Not used by default -XD24 1
LCU PUMP 1 – STATUS MOTOR CIRCUIT BREAKER 1->ON -XD1 1
LCU PUMP 2 – STATUS MOTOR CIRCUIT BREAKER 1->ON -XD1 2
LCU LEAKAGE DETECTOR – LCU UNIT 1->LEAKAGE -XD1 3
LCU RESET – LCU UNIT 1->RESET -XD1 4
Not used by default -XD1 5
LCU UNIT START – LCU UNIT (PUMP) 1->START -XD1 6
Not used by default -XDIO 1
Not used by default -XDIO 2
LCU PUMP 1 - CONTROL 1->RUN -XRO1 12
LCU PUMP 2 - CONTROL 1->RUN -XRO2 22
LCU FAULT 0->FAULT -XRO3 32
LCU CONTROL VOLTAGE N TO SUPPLY UNIT
LCU CONTROL VOLTAGE L TO SUPPLY UNIT
LCU FAULT SIGNAL /
+20.2 FRAME
-X202
-X201
/210b/1C -X211:1
/205a/3E -X201:3
/205a/2E -X201:13
/205a/6E -X201:31
/205a/7E -Q201:A1
/205a/6E -X201:32
-A210 -XPOW
-A210 -XRO1
-A210 -XRO2
-A210 -XRO3
-A210 -XDIO
-A210 -XD1
-A210 -XD24
-A210 /210b/1A /210b/5D /211a/1E /211b/1E
CONTROL UNIT ZCU-14
-X201
-S201
-S211 +20.1
Water leakage sensor
-F201 /200a/2C
-K6 /205a/3C
/210b/4C -X211:3
/210b/2B -X211:6
Twisted pair H05V2-K 1 BK
Twisted pair H05V2-K 1 BKWH
H05V2-K 1 BK
DI1...DI5 FLOATING POSITION DICOM CONNECTED TO DIOGND (DEFAULT)
J6
24V GND NC COM NO DI1L 24VDC DICOM +24VD DI1GND DIO2+ DIO1+ DI6 DI5 DI4 DI3 DI2 DI1
RD121728 / 3195
Prep. N. N
20.02.2020
Title: Liquid Cooling unit Control unit 1/3
Circuit diagram
EFS2
Item Des. = 20 + 20.2
SAP Doc. No.
EPLAN Doc. No. 3AFE – -20
ABB Ref. No. -
Resp. Dept.
Rev. .1
Sheet 210a
No. of Sheets 9
Cust. Doc. No.
Cust. Ref. No.
Customer
App.
Project Circuit Diagrams for User Manual
ACS880-1007LC
ACS880-1007LC-0070-7
690V
ABB

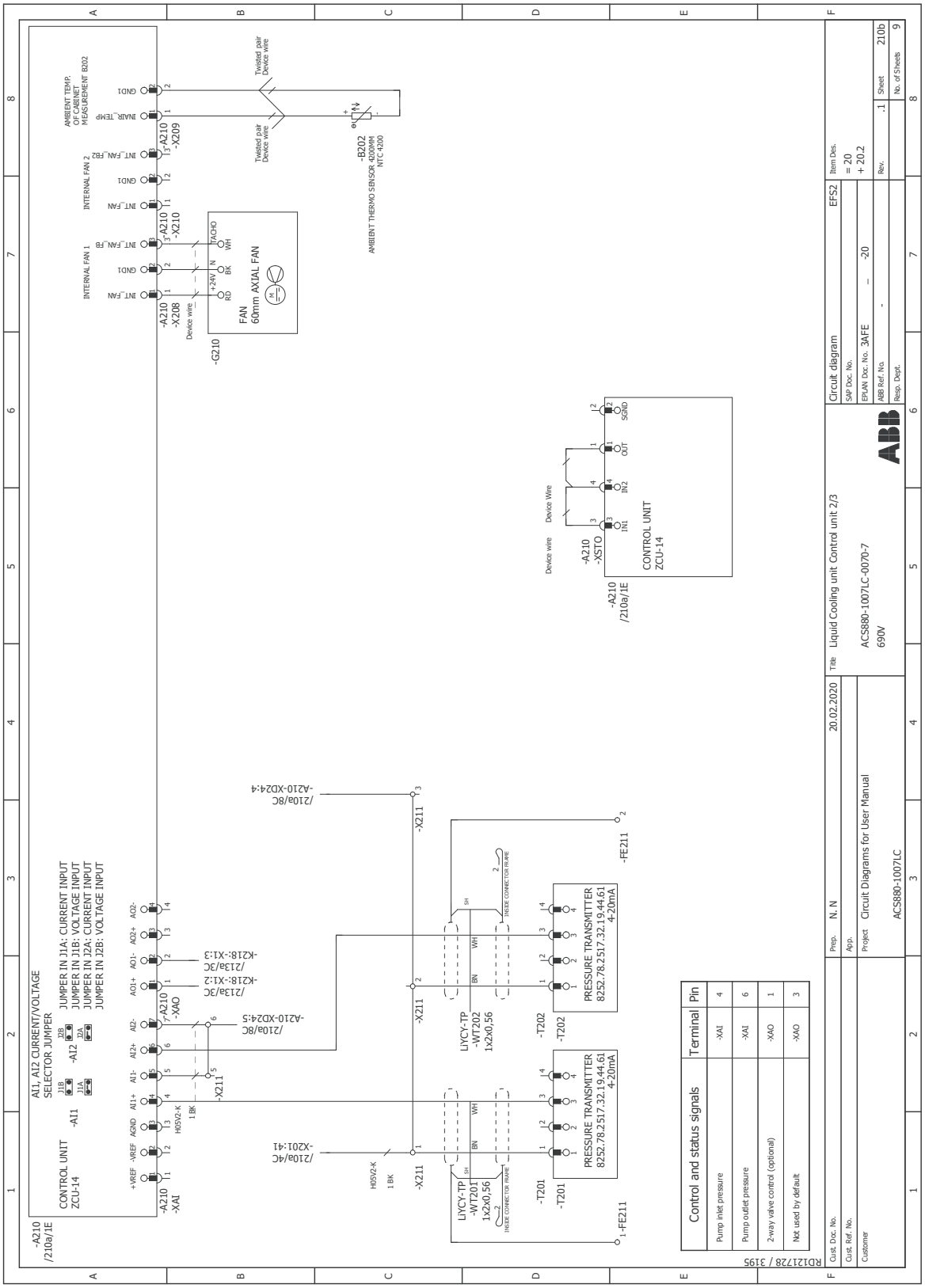
AMBIENT TEMP. OF CABINET MEASUREMENT B202
INTERNAL FAN 2
INTERNAL FAN 1
-A210 -X209
-A210 -X210
-A210 -X208
Twisted pair Device wire
-B202
AMBIENT THERMO SENSOR -4000MM NTC 4200
FAN 60mm AXIAL FAN
-G210
Device wire
-A210 -XSTO
CONTROL UNIT ZCU-14
-A210 /210a/1E
AI1, AI2 CURRENT/VOLTAGE SELECTOR JUMPER
JUMPER IN J1A: CURRENT INPUT
JUMPER IN J1B: VOLTAGE INPUT
JUMPER IN J2A: CURRENT INPUT
JUMPER IN J2B: VOLTAGE INPUT
CONTROL UNIT ZCU-14
-A210 -XAI
-A210 -XAO
/210a/8C -A210-XD24:4
/210a/8C -A210-XD24:5
/213a/3C -K218:-X1:2
/213a/3C -K218:-X1:3
-X211
/210a/4C -X201:41
LIYCY-TP -WT201 1x2x0,56
LIYCY-TP -WT202 1x2x0,56
PRESSURE TRANSMITTER 8252.78.2517.32.19.44.61 4-20mA
-T201
-T202
-FE211
Control and status signals
Terminal
Pin
Pump inlet pressure
Pump outlet pressure
2-way valve control (optional)
Not used by default
Prep. N. N
20.02.2020
Title Liquid Cooling unit Control unit 2/3
ACS880-1007LC-0070-7
690V
Circuit diagram
EFS2
Item Des. = 20 + 20.2
Project Circuit Diagrams for User Manual
ACS880-1007LC
Rev. .1
Sheet 210b
No. of Sheets 9
R0121728 / 3195

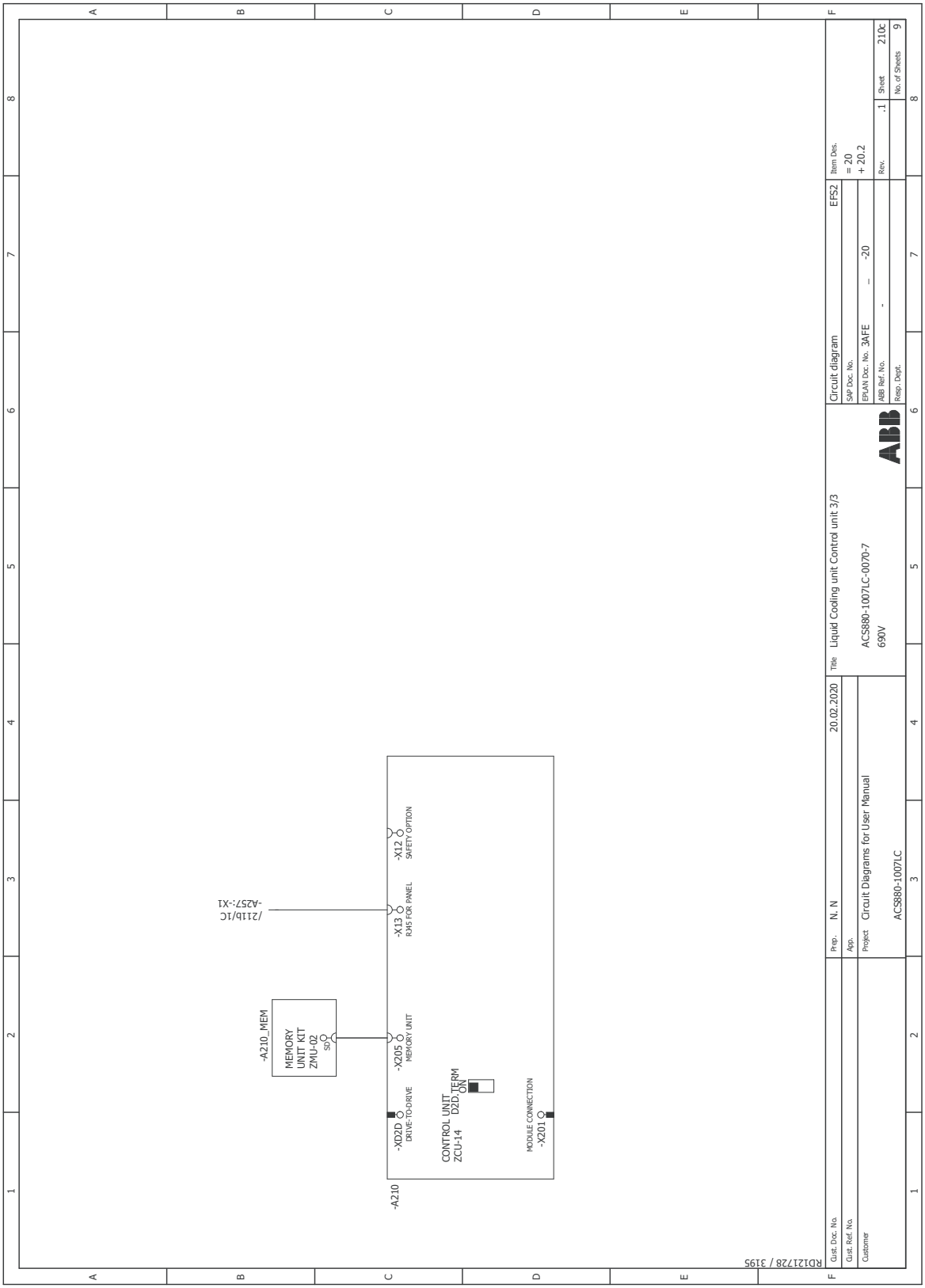
-A210_MEM
MEMORY
UNIT KIT
ZMU-02
SD
/211b/1C
-A257:-X1
-A210
-XD2D
DRIVE-TO-DRIVE
-X205
MEMORY UNIT
-X13
RJ45 FOR PANEL
-X12
SAFETY OPTION
CONTROL UNIT
ZCU-14
D2D TERM
ON
MODULE CONNECTION
-X201
RD12172B / 3195
Cust. Doc. No.
Cust. Ref. No.
Customer
Prep. N. N
20.02.2020
App.
Project Circuit Diagrams for User Manual
ACS880-1007LC
Title: Liquid Cooling unit Control unit 3/3
ACS880-1007LC-0070-7
690V
Circuit diagram
EFS2
SAP Doc. No.
EPLAN Doc. No. 3AFE – -20
ABB Ref. No. -
Resp. Dept.
Item Des.
= 20
+ 20.2
Rev. .1
Sheet 210c
No. of Sheets 9

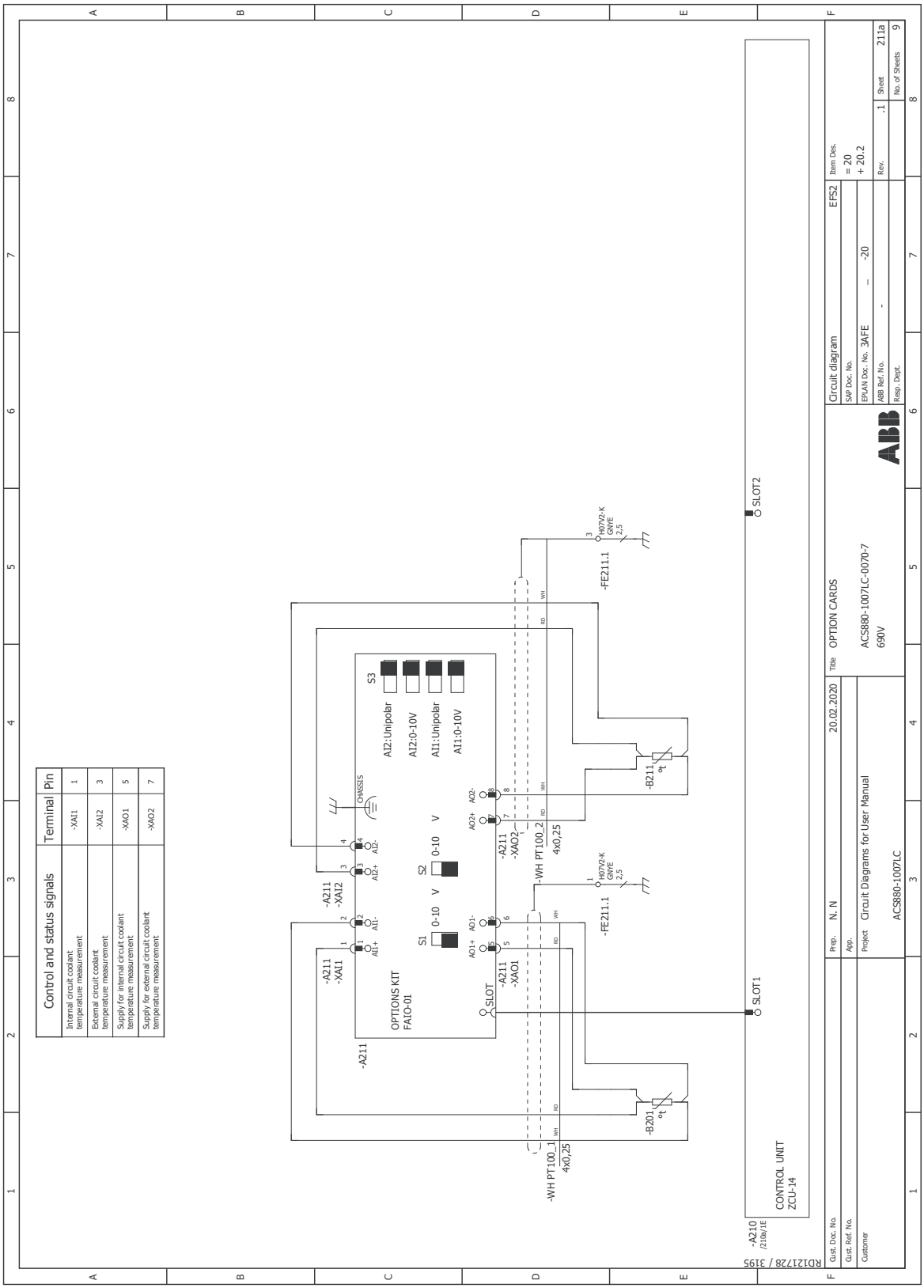
Control and status signals
Terminal
Pin
Internal circuit coolant temperature measurement
-XAI1
1
External circuit coolant temperature measurement
-XAI2
3
Supply for internal circuit coolant temperature measurement
-XAO1
5
Supply for external circuit coolant temperature measurement
-XAO2
7
-A211
-XAI1
-A211
-XAI2
-A211
OPTIONS KIT
FAIO-01
AI1+
AI1-
AI2+
AI2-
CHASSIS
S1
S2
S3
0-10 V
0-10 V
AI2:Unipolar
AI2:0-10V
AI1:Unipolar
AI1:0-10V
SLOT
AO1+
AO1-
AO2+
AO2-
-A211
-XAO1
-A211
-XAO2
-WH PT100_1
4x0,25
-WH PT100_2
4x0,25
-FE211.1
-FE211.1
H07V2-K
GNYE
2,5
-B201
-B211
SLOT1
SLOT2
CONTROL UNIT
ZCU-14
-A210
/210a/1E
RD1217 28 / 3195
Cust. Doc. No.
Cust. Ref. No.
Customer
Prep.
N. N
20.02.2020
App.
Project
Circuit Diagrams for User Manual
ACS880-1007LC
Title
OPTION CARDS
ACS880-1007LC-0070-7
690V
Circuit diagram
SAP Doc. No.
EPLAN Doc. No.
3AFE
-20
ABB Ref. No.
Resp. Dept.
EFS2
Item Des.
= 20
+ 20.2
Rev.
.1
Sheet
211a
No. of Sheets
9

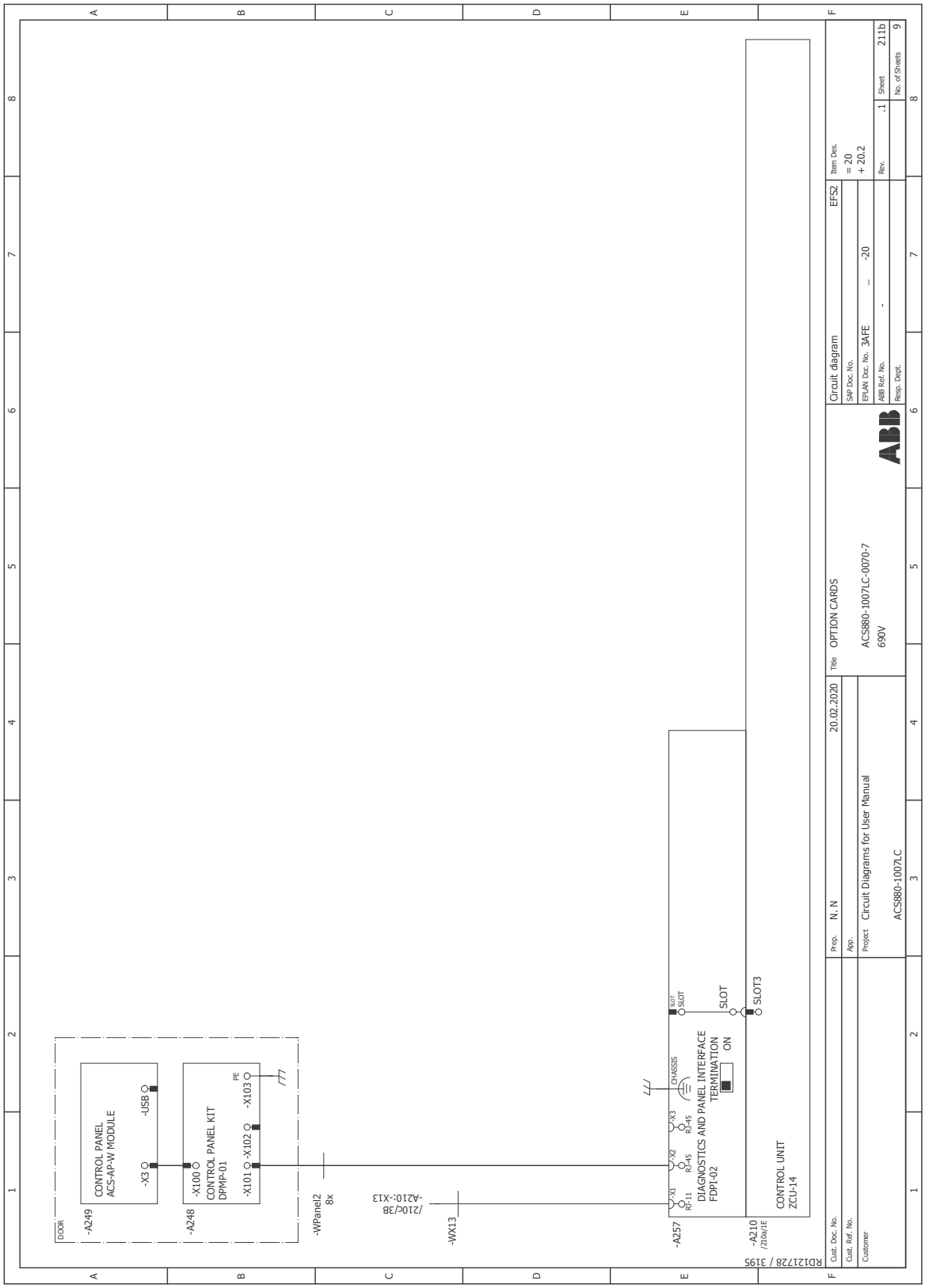
DOOR
-A249
CONTROL PANEL
ACS-AP-W MODULE
-USB
-X3
-A248
-X100
CONTROL PANEL KIT
DPMP-01
-X101
-X102
-X103
PE
-WPanel2
8x
-WX13
/210c/3B
-A210:-X13
-A257
X1
RJ-11
X2
RJ-45
X3
RJ-45
CHASSIS
DIAGNOSTICS AND PANEL INTERFACE
FDPI-02
TERMINATION
ON
SLOT
SLOT
SLOT3
-A210
/210a/1E
CONTROL UNIT
ZCU-14
RD12172B / 3195
Cust. Doc. No.
Cust. Ref. No.
Customer
Prep. N. N
20.02.2020
App.
Project Circuit Diagrams for User Manual
ACS880-1007LC
Title OPTION CARDS
ACS880-1007LC-0070-7
690V
Circuit diagram
SAP Doc. No.
EPLAN Doc. No. 3AFE – -20
ABB Ref. No. -
Resp. Dept.
Item Des.
= 20
+ 20.2
EFS2
Rev. .1
Sheet 211b
No. of Sheets 9

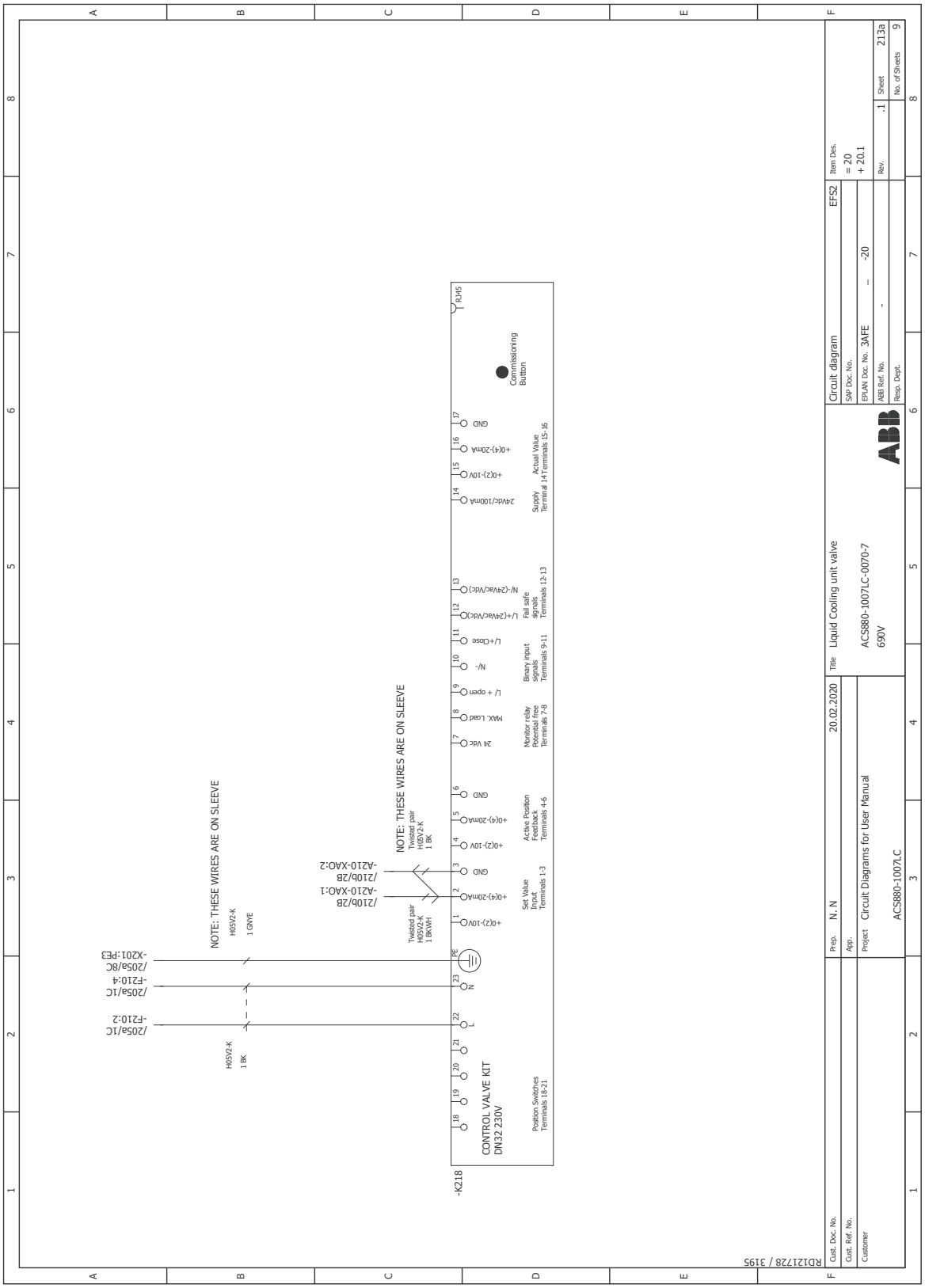
NOTE: THESE WIRES ARE ON SLEEVE
H05V2-K
1 GNYE
H05V2-K
1 BK
/205a/1C
-F210:2
/205a/1C
-F210:4
/205a/8C
-X201:PE3
NOTE: THESE WIRES ARE ON SLEEVE
Twisted pair
H05V2-K
1 BK
/210b/2B
-A210-XAO:1
/210b/2B
-A210-XAO:2
Twisted pair
H05V2-K
1 BKWH
-K218
CONTROL VALVE KIT
DN32 230V
Position Switches
Terminals 18-21
Set Value
Input
Terminals 1-3
Active Position
Feedback
Terminals 4-6
Monitor relay
Potential free
Terminals 7-8
Binary input
signals
Terminals 9-11
Fail safe
signals
Terminals 12-13
Supply
Terminal 14
Actual Value
Terminals 15-16
Commissioning
Button
RJ45
Prep. N. N
20.02.2020
Title Liquid Cooling unit valve
ACS880-1007LC-0070-7
690V
Circuit diagram
EFS2
Item Des.
= 20
+ 20.1
Project Circuit Diagrams for User Manual
ACS880-1007LC
Rev. .1
Sheet 213a
No. of Sheets 9
RD121728 / 3195

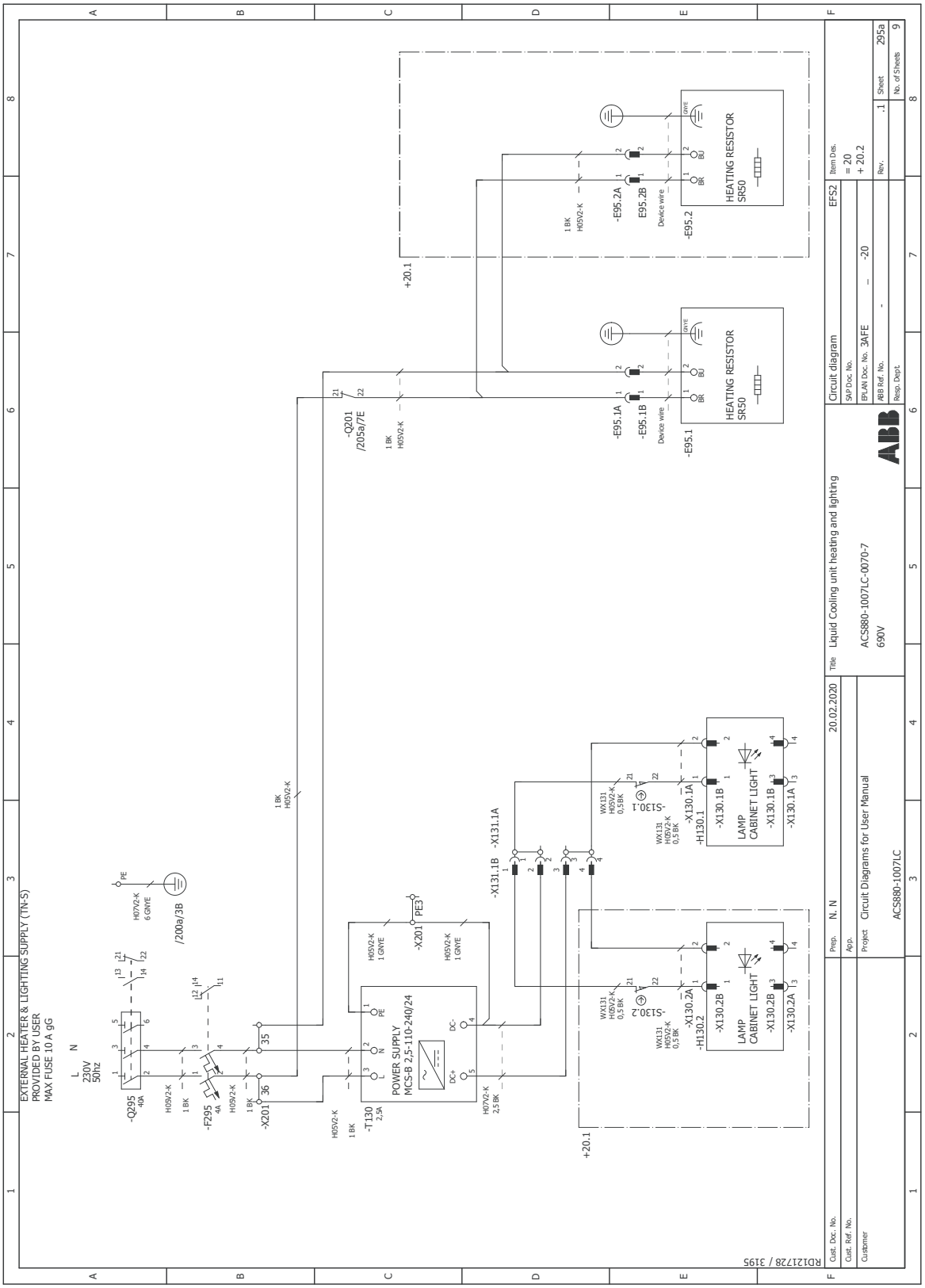
EXTERNAL HEATER & LIGHTING SUPPLY (TN-S)
PROVIDED BY USER
MAX FUSE 10 A gG
L
230V
50hz
N
-Q295
40A
-F295
4A
-X201
POWER SUPPLY
MCS-B 2,5-110-240/24
-T130
2,5A
-X201 PE3
/200a/3B
-Q201
/205a/7E
-X131.1B -X131.1A
-X130.1A
-X130.1B
-H130.1
-X130.2A
-X130.2B
-H130.2
LAMP
CABINET LIGHT
-S130.1
-S130.2
+20.1
-E95.1
-E95.1A
-E95.1B
-E95.2
-E95.2A
E95.2B
HEATING RESISTOR
SR50
Device wire
Circuit diagram
EFS2
Item Des.
= 20
+ 20.2
-20
Liquid Cooling unit heating and lighting
ACS880-1007LC-0070-7
690V
20.02.2020
N. N
Circuit Diagrams for User Manual
ACS880-1007LC
Sheet 295a
No. of Sheets 9
RD12172 8 / 3195

16

Dimension drawings

Contents of this chapter

This chapter contains cooling unit dimension drawings.

The dimensions are in millimeters (for inches, divide by 25.4).

Cable entry (bottom)

ACS880-1007LC-0070	ACS880-1007LC-0195
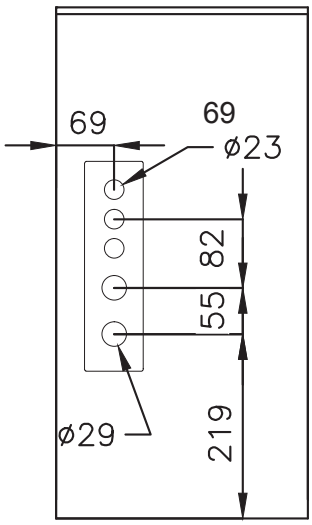	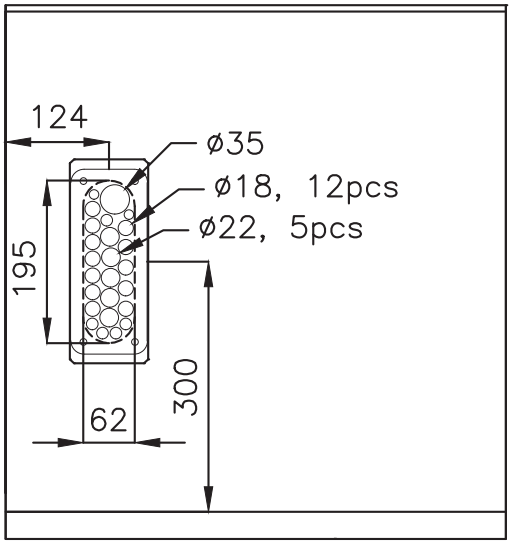

Note: External piping on the right side. The location of the cable entries is different in other constructions.

ACS880-1007LC-0070 in cabinet line-up (at right), external cooling circuit from right

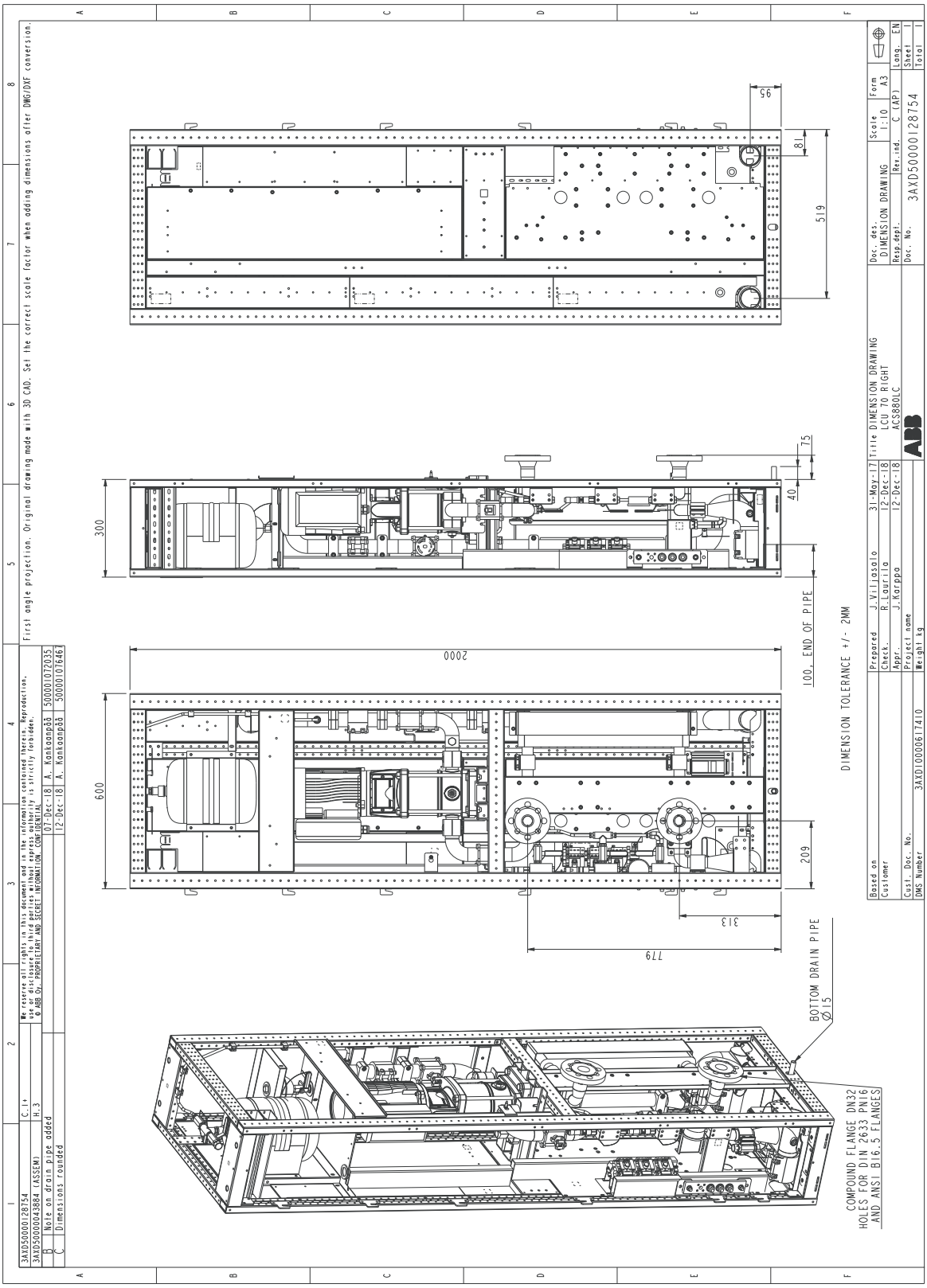

ACS880-1007LC-0070 stand-alone cooling unit, external cooling circuit from right

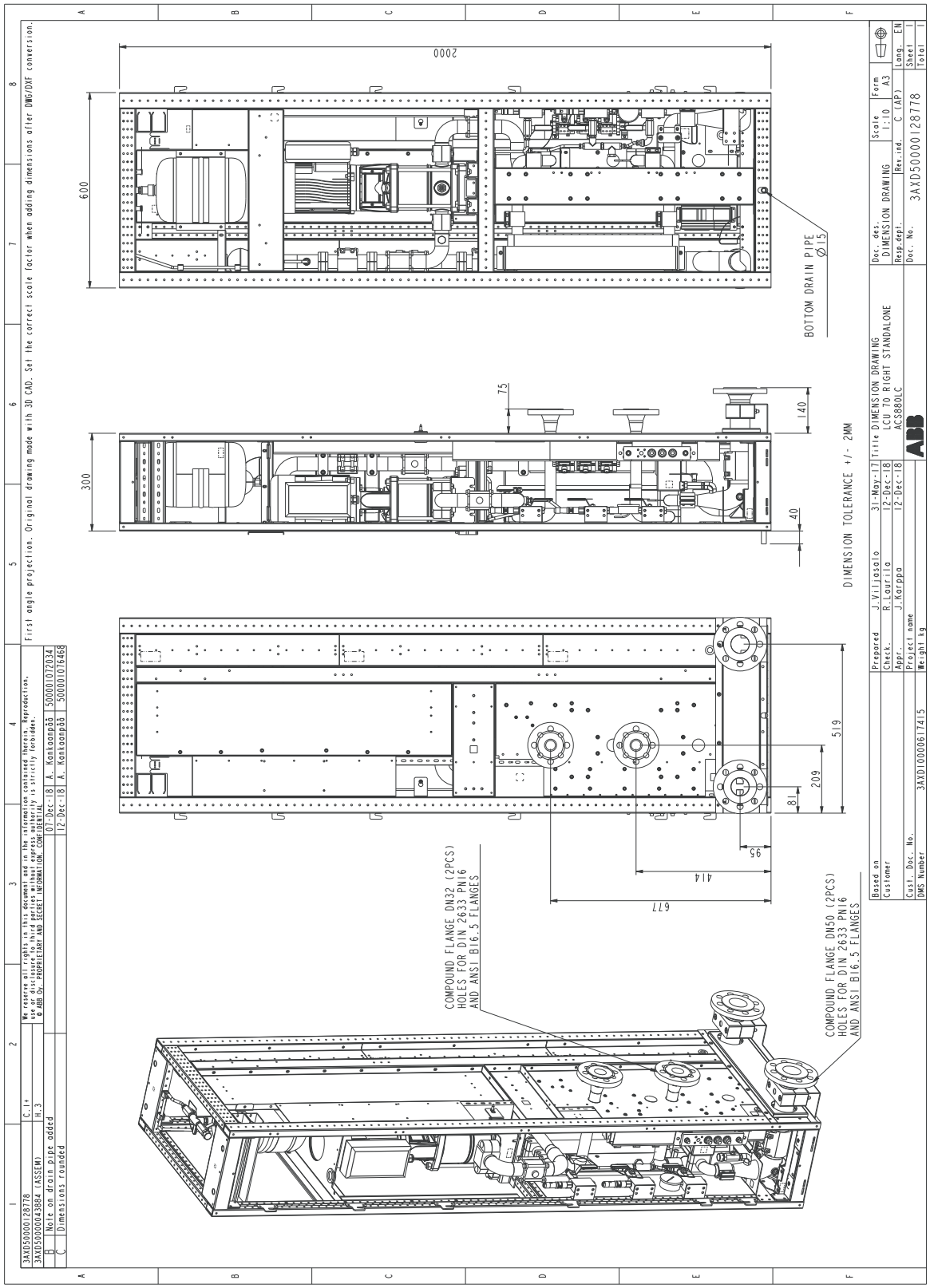

ACS880-1007LC-0195 in cabinet line-up (at right), external cooling circuit from right

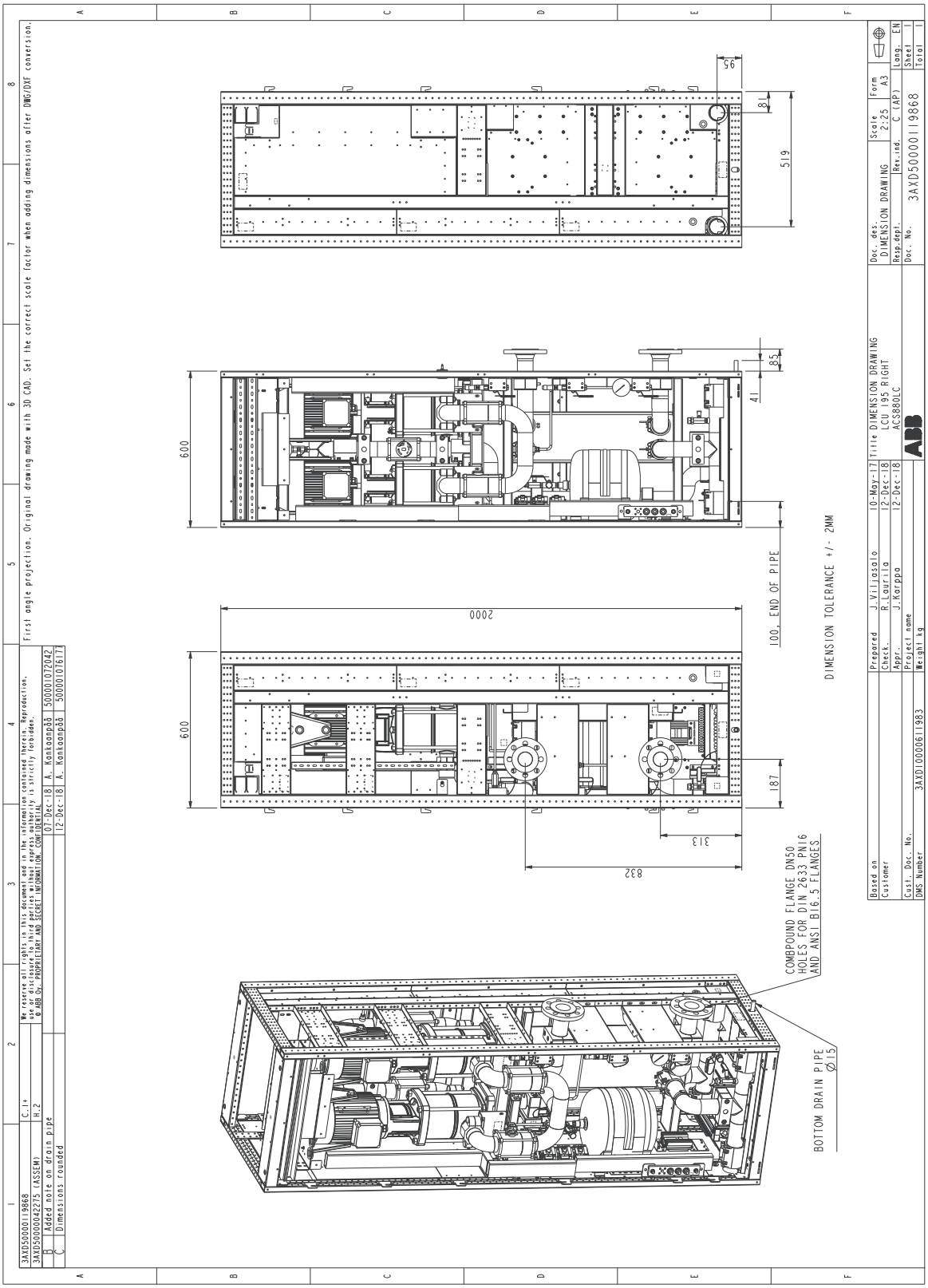

ACS880-1007LC-0195 stand-alone cooling unit, external cooling circuit from right

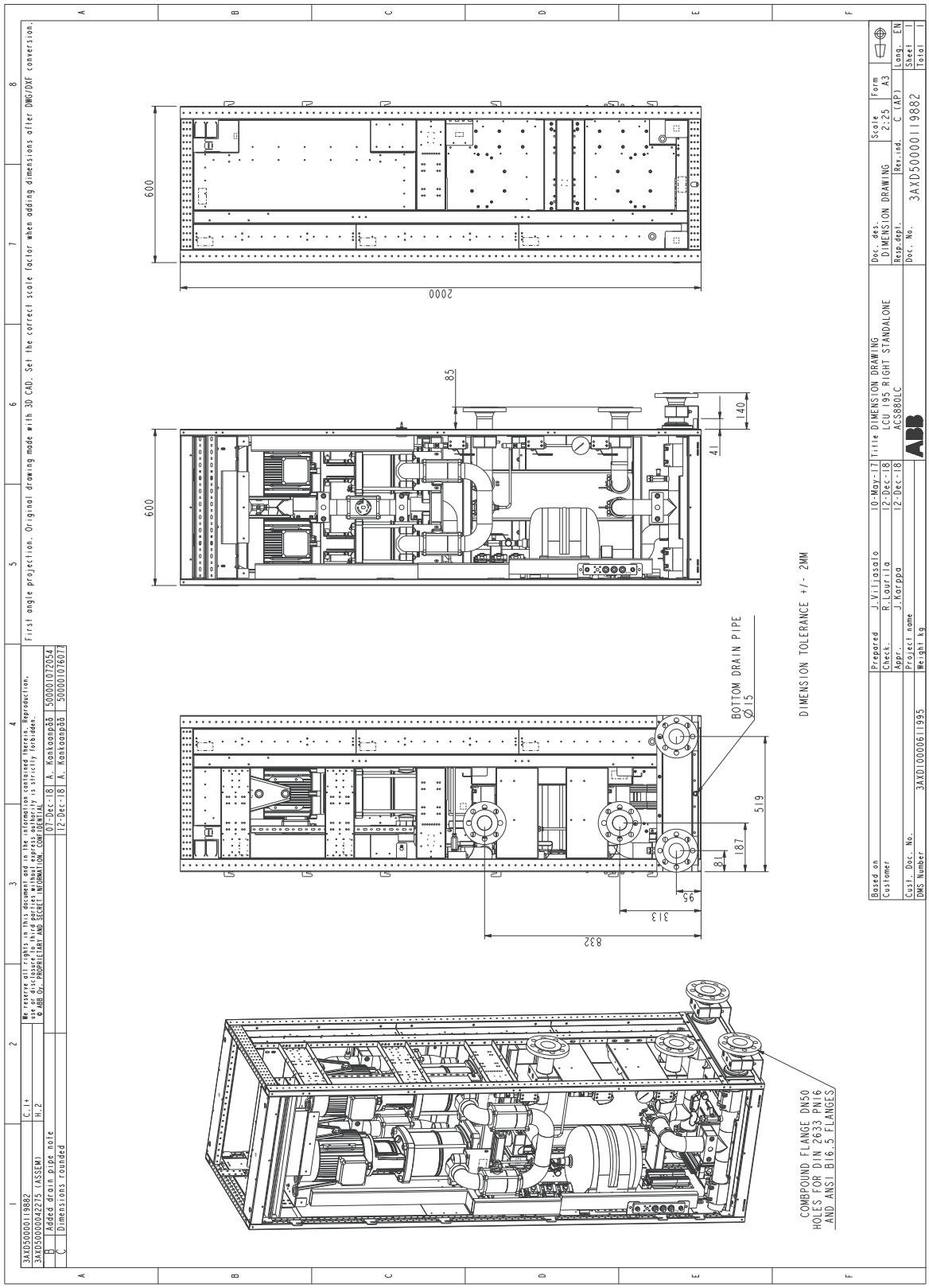

2-way control valve cubicle (option +C242) for ACS880-1007LC-0070

The cooling unit cubicle is on the left (not visible), and the external cooling circuit connection is on the right.

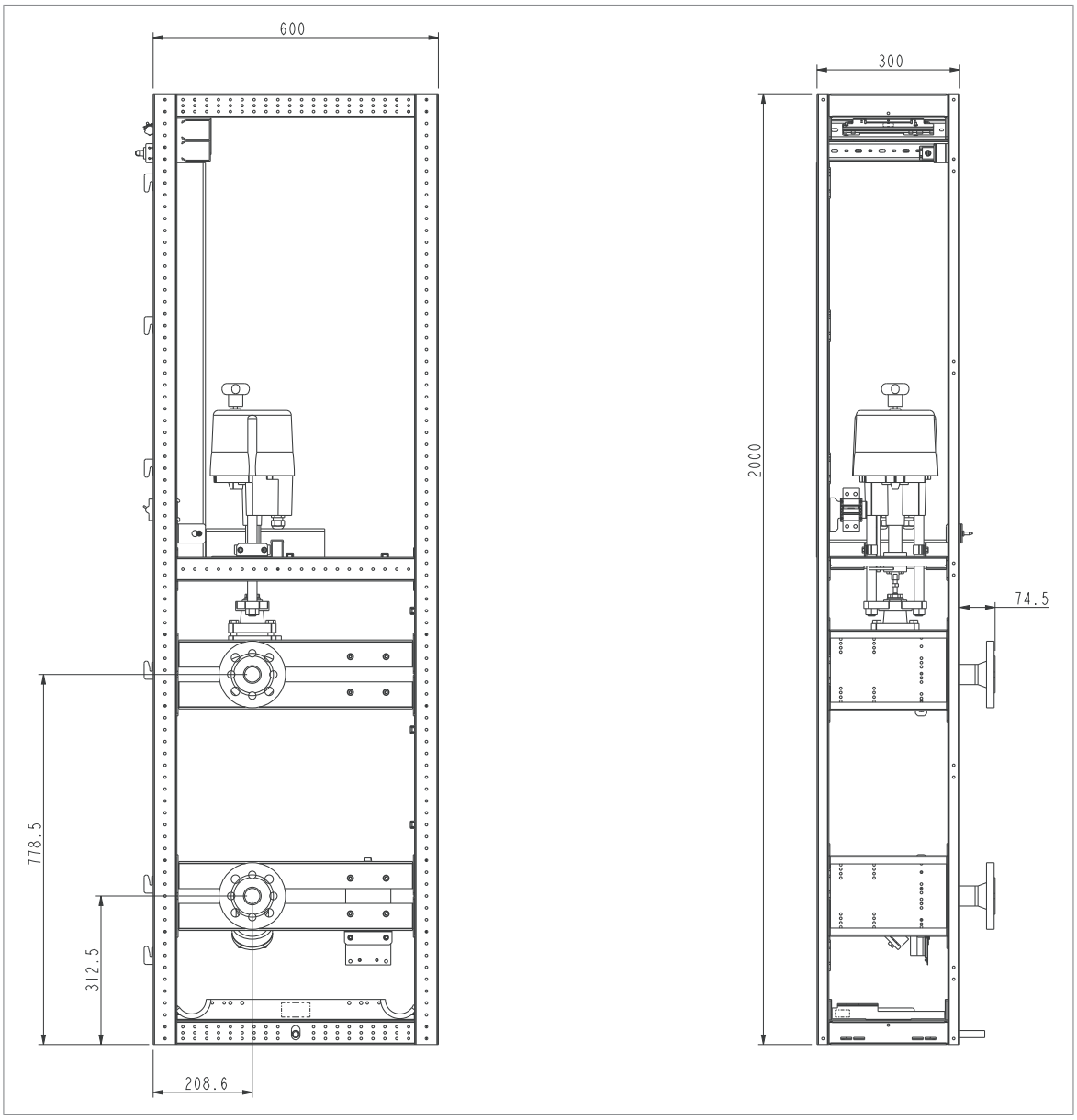

2-way control valve cubicle (option +C242) for ACS880-1007LC-0195

The cooling unit cubicle is on the left (not visible), and the external cooling circuit connection is on the right.

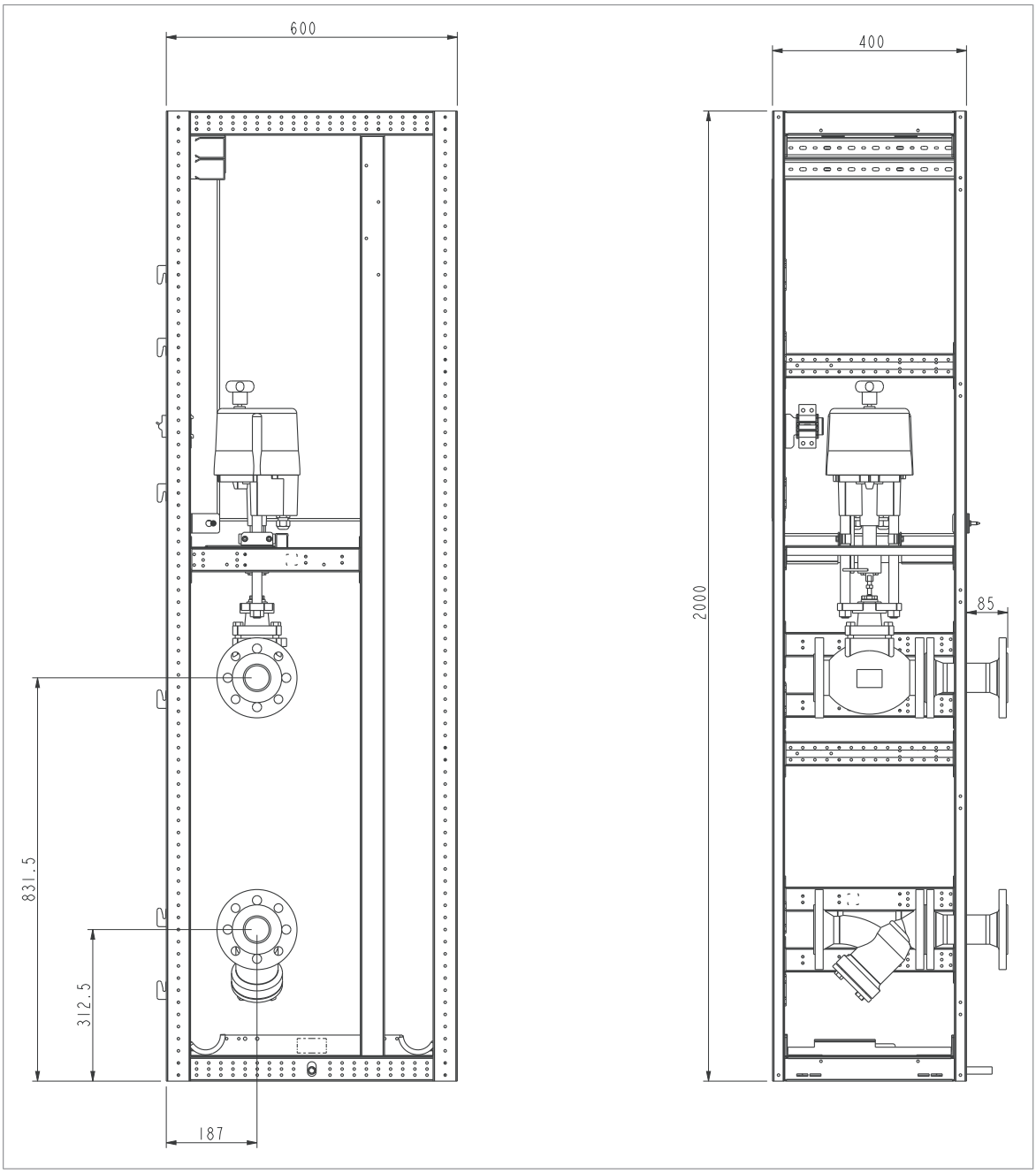

½ inch socket wrench adapter for valve without handle

Some valves have a socket wrench adapter with a 13×13 mm slot. They can be operated with a ½ inch socket wrench with no socket attached, or with a square head socket.

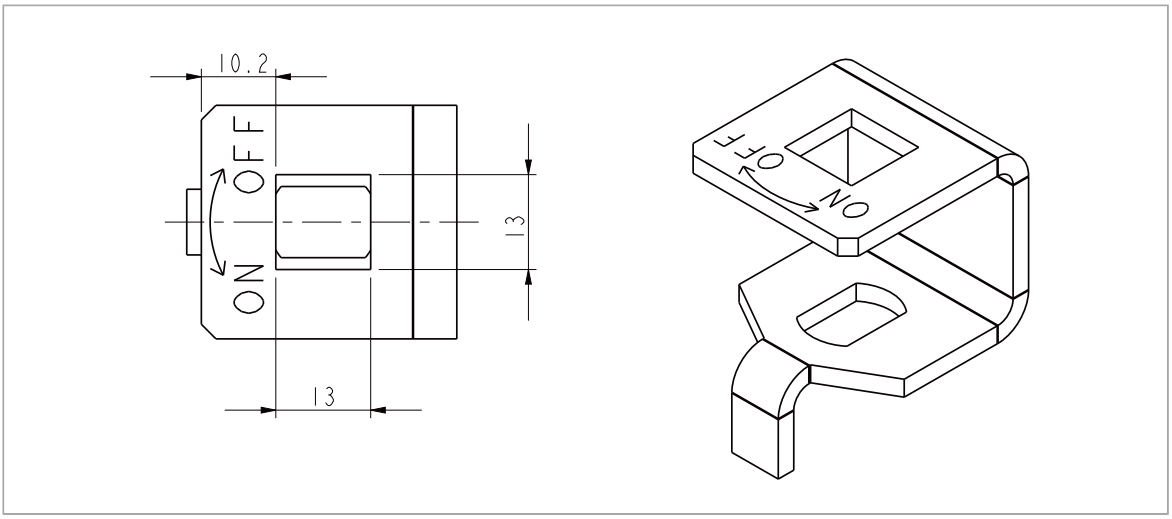

ACS880-1007LC-0070 pipe flange

The pipe flanges are combi flanges, which contain two different flange types with 4 bolt holes each (DIN 2633 / ANSI B 16.5).

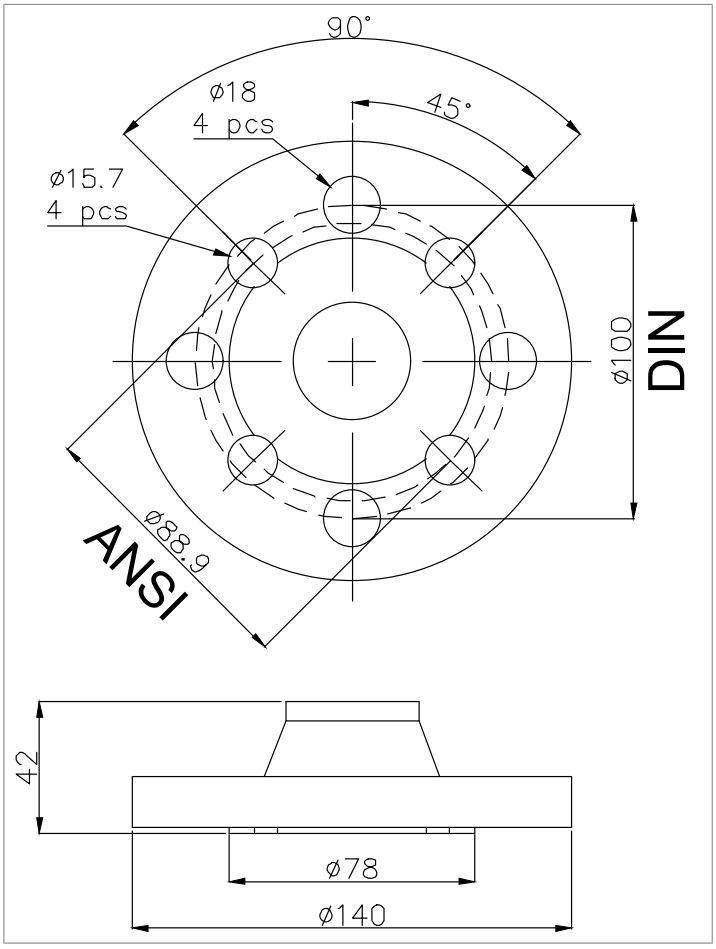

ACS880-1007LC-0195 pipe flange

The pipe flanges are combi flanges, which contain two different flange types with 4 bolt holes each (DIN 2633 / ANSI B 16.5).

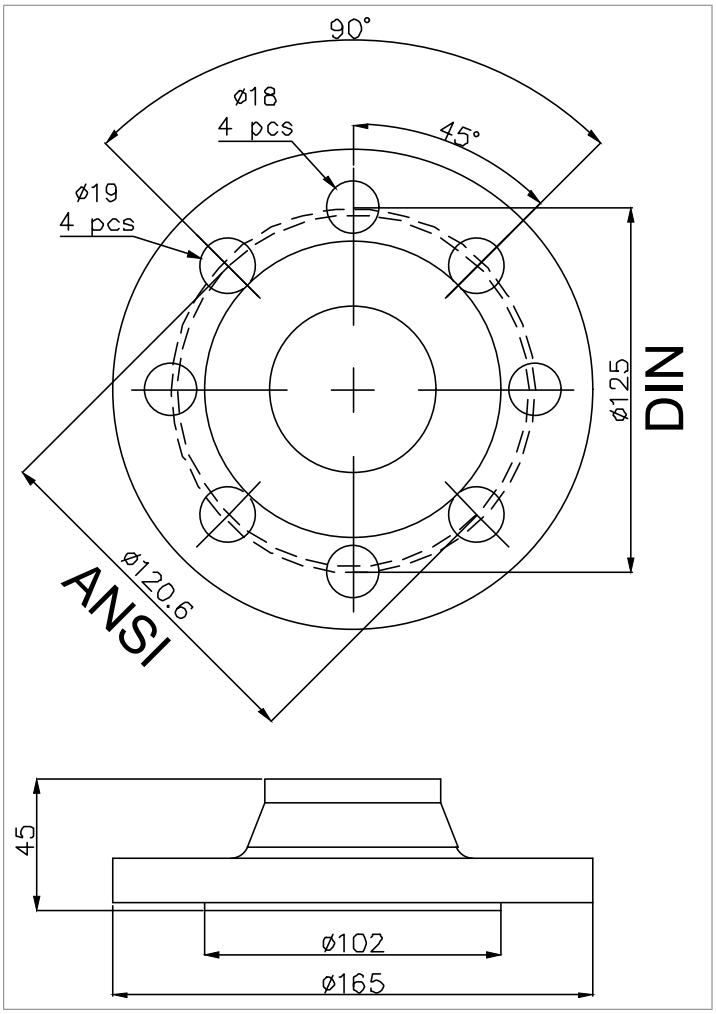

Further information

Product and service inquiries

Address any inquiries about the product to your local ABB representative, quoting the type designation and serial number of the unit in question. A listing of ABB sales, support and service contacts can be found by navigating to www.abb.com/searchchannels.

Product training

For information on ABB product training, navigate to new.abb.com/service/training.

Providing feedback on ABB manuals

Your comments on our manuals are welcome. Navigate to new.abb.com/drives/manuals-feedback-form.

Document library on the Internet

You can find manuals and other product documents in PDF format on the Internet at www.abb.com/drives/documents.

a10 (frozen)
PDF-A4
Created 2022-08-31, 10:47:50

www.abb.com/drives

3AXD50000129607F

© Copyright 2022 ABB. All rights reserved.
Specifications subject to change without notice.

3AXD50000129607 Rev F (EN) 2022-08-31