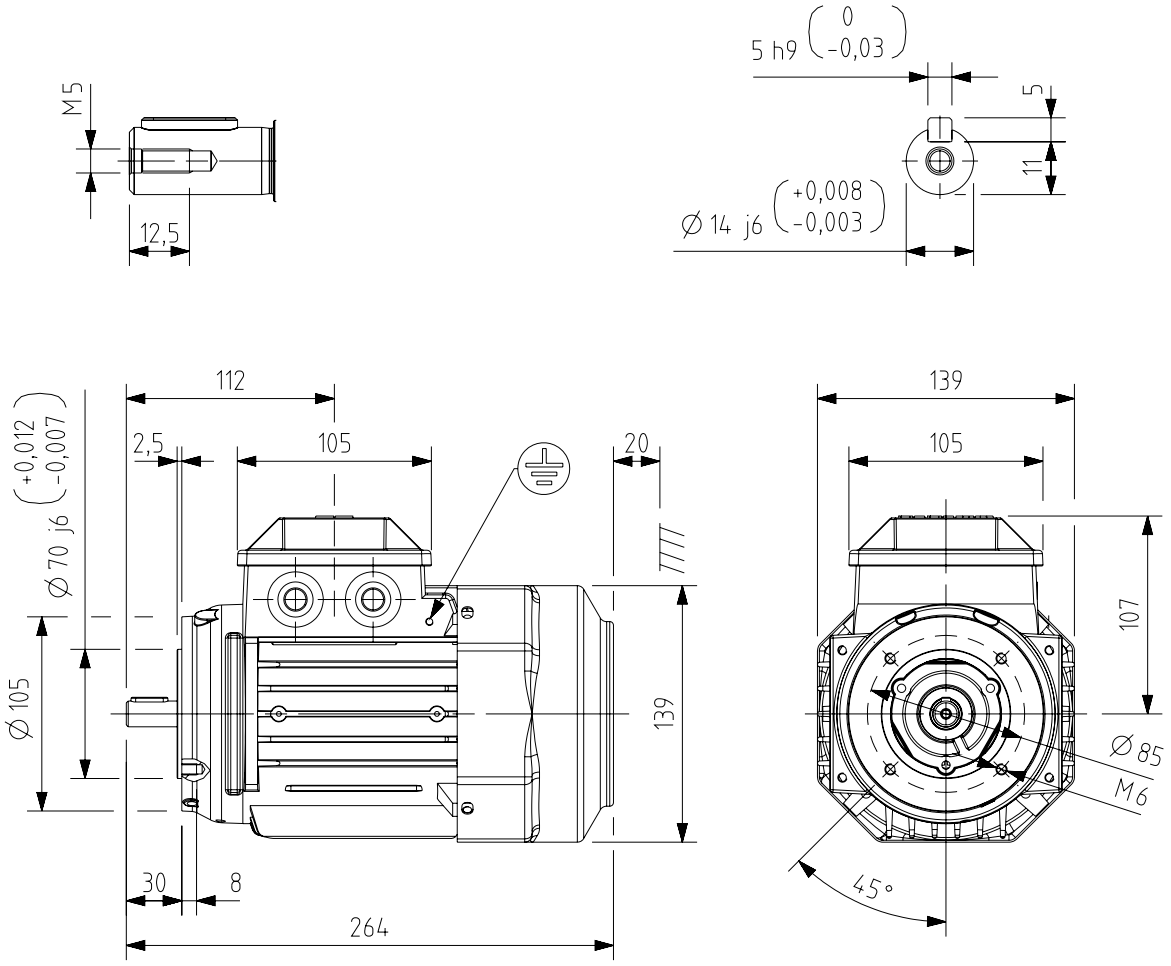

Additional information:

Dimension Print	Motor Type: M3BP 71M_2-8 B14, V18, V19 FT85 M3GP 71M_2-8 B14, V19 FT85	Document No: 3GZF500007-9 E 13 BP 71 A
Description: STANDARD IE3 SQUIRREL CAGE MOTOR		

Unit:	ABB Oy, Motors and Generators	Issued by:	Jeff Wang	Replaces:	
Date:	06.12.2016	Approved by:	Adam Zhu	Replaced by:	

ABB Oy	Customer Reference:	ABB