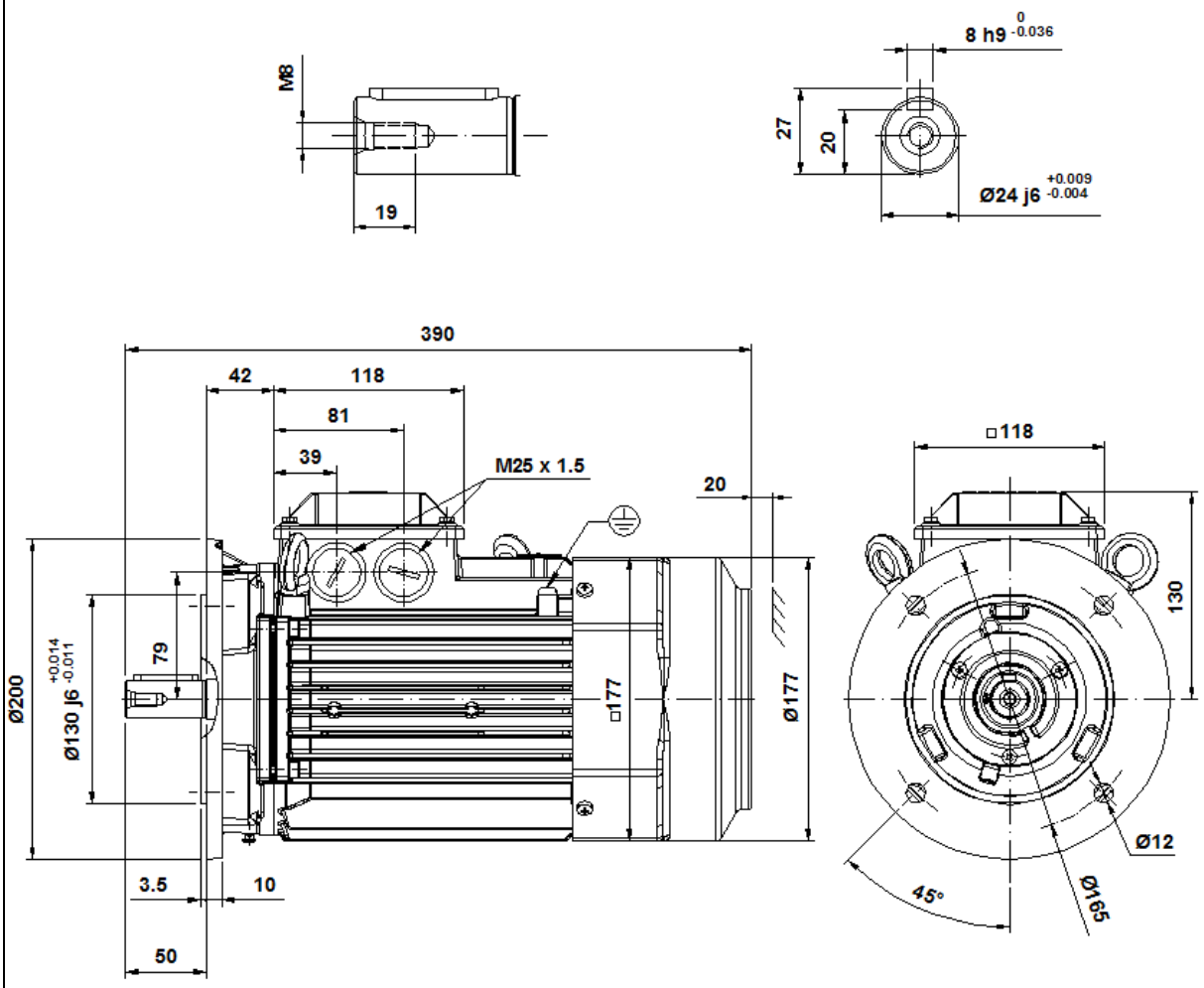

Additional information:

Dimension Print	Motor Type: M3BP (K & L) 90L 2-8 B5, V1, V3 M3GP (K & L) 90L 2-8 B5, V3	Document No: 3GZF500009-43 E 13 BP 90 A
Description: STANDARD IE3 SQUIRREL CAGE MOTOR WITH LONG FRAME		

Unit: ABB Oy, Motors and Generators	Issued by: J.Muñoz	Replaces:	
Date: 04.10.2016	Approved by: E.Saenz	Replaced by:	
ABB Oy	Customer Reference:		ABB