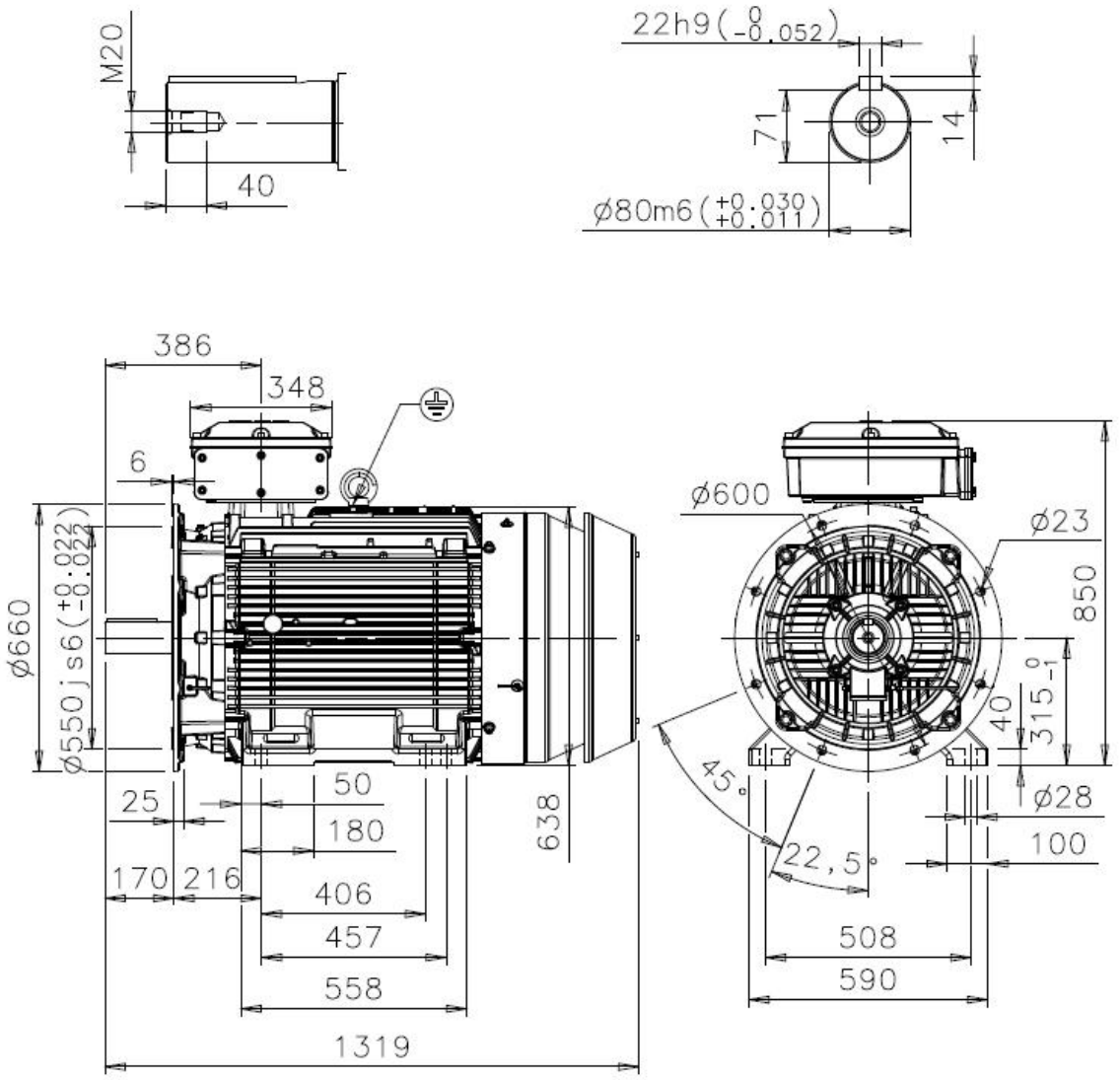

Additional information:

Dimension Print	Motor Type: M3GP 315SM_4 V15	Document No: 3GZF500031-1645 B 14 GP 315 A
Description: SQUIRREL CAGE MOTOR, DUST IGNITION PROTECTION		

Unit:	ABB Oy, Motors and Generators	Issued by:	Yi. Zhang	Replaces:
Date:	23.10.2014	Approved by:	J-P. Alanen	Replaced by:

ABB Oy	Customer Reference:	ABB