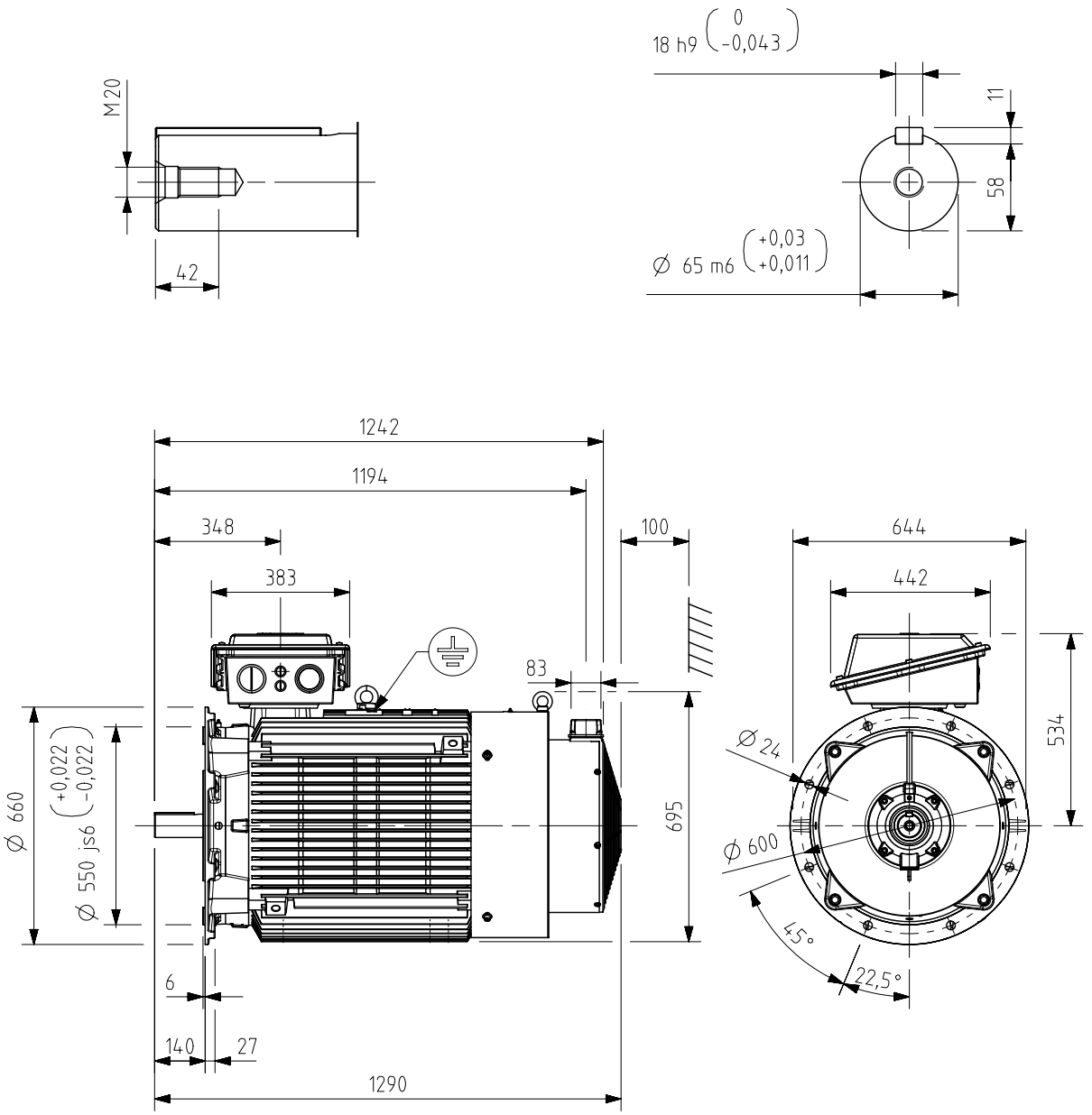

Additional information:

Dimension Print	Motor Type: M2BAX 315SM 2 B5, V1	Document No: 3GZF500031-2100 A 14 BA 315 A
Description: IE3 SQUIRREL CAGE MOTOR WITH SEPARATE COOLING		

Unit:	Motors and Generators	Issued by:	P.Mäkinen	Replaces:
Date:	28.3.2015	Approved by:	T.Kuusisto	Replaced by:

ABB Ltd.	Customer Reference:	ABB