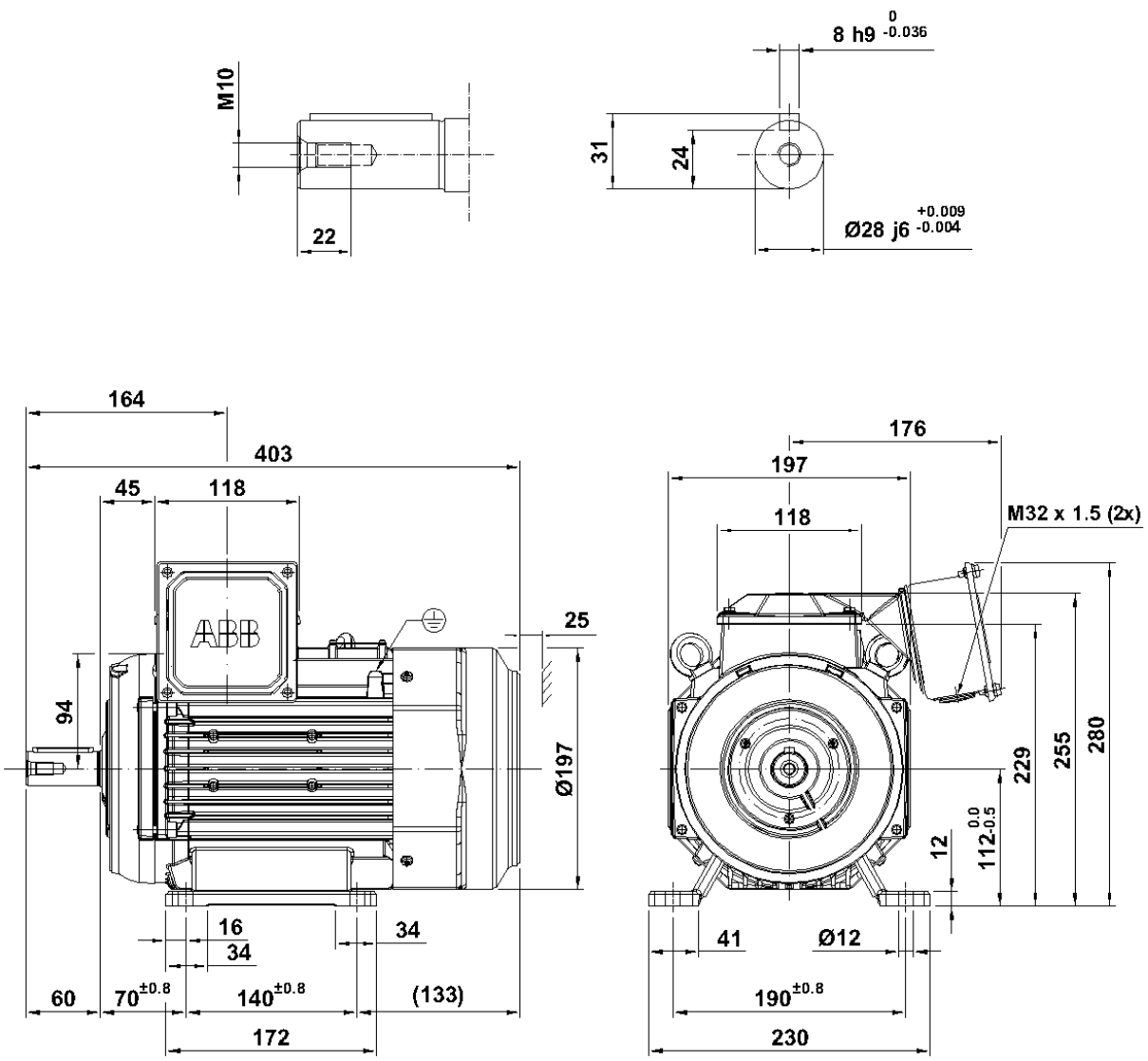

Additional information:

Dimension Print	Motor Type: M3BP (B) 112_2-8 B3, B6, B7, B8, V5, V6	Document No: 3GZF500611-15 B 14 BP 112 A
Description: SQUIRREL CAGE MOTOR WITH TERMINAL BOX RHS.		

Unit:	ABB Oy, Motors and Generators	Issued by:	S.Tikkanen	Replaces:
Date:	14.09.2016	Approved by:	C.Vägar	Replaced by:

ABB Oy	Customer Reference:	ABB