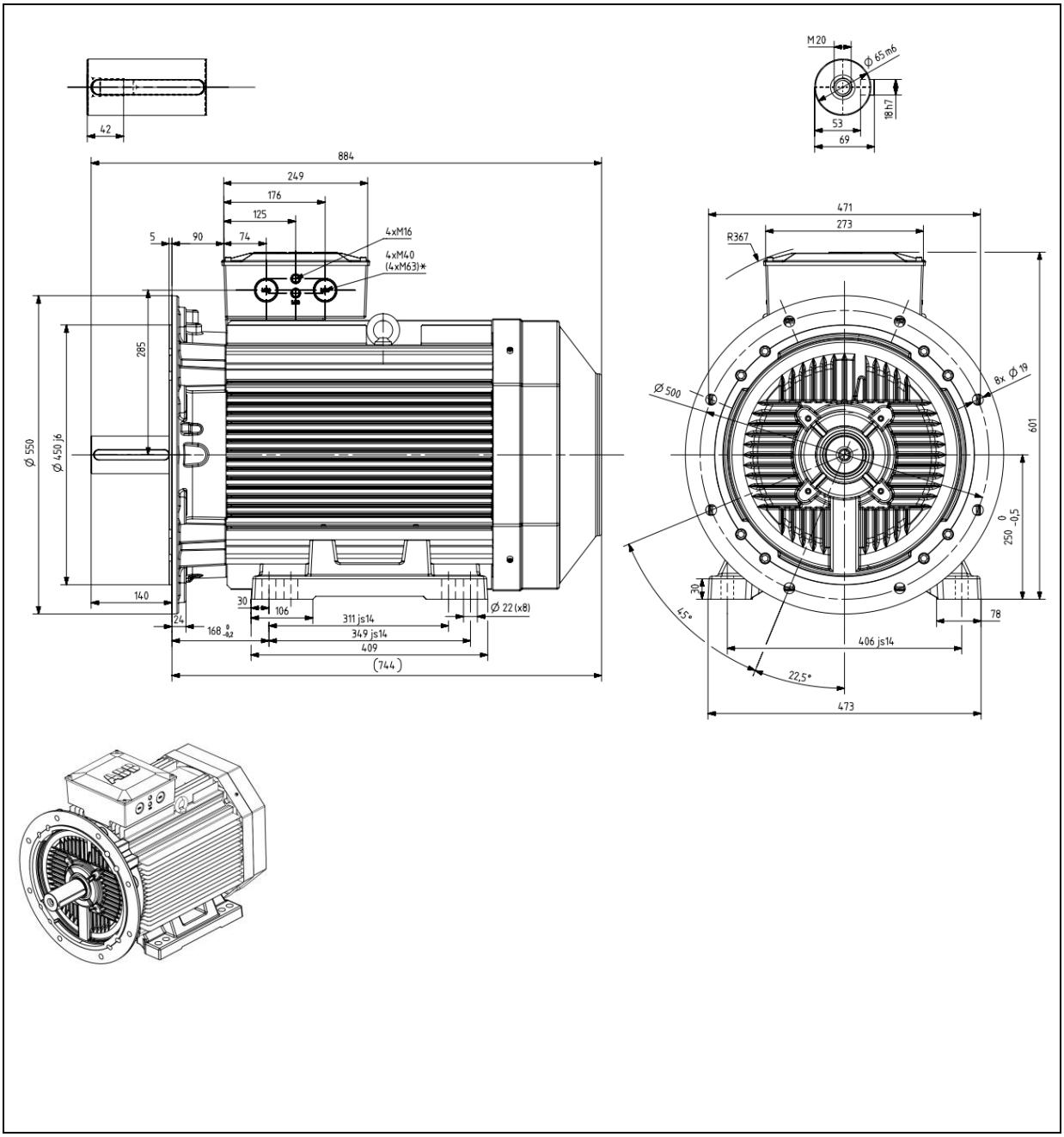

Additional information:

Ex ec / Ex t

*Only for motors with volgate code "S" and M3AA 250 SMC 4 IE2.

Dimension Print	Motor Type: M3AA 250 (G, K) 4-8p B35	Document No: 3GZL500825-5
Description: Three phase motor		

Unit:	ABB Oy, Motors and Generators	Issued by:	M. Szymanski	Replaces:
Date:	2017-03-24	Approved by:	J. Cieslikowski	Replaced by:

ABB Oy	Customer Reference:	ABB