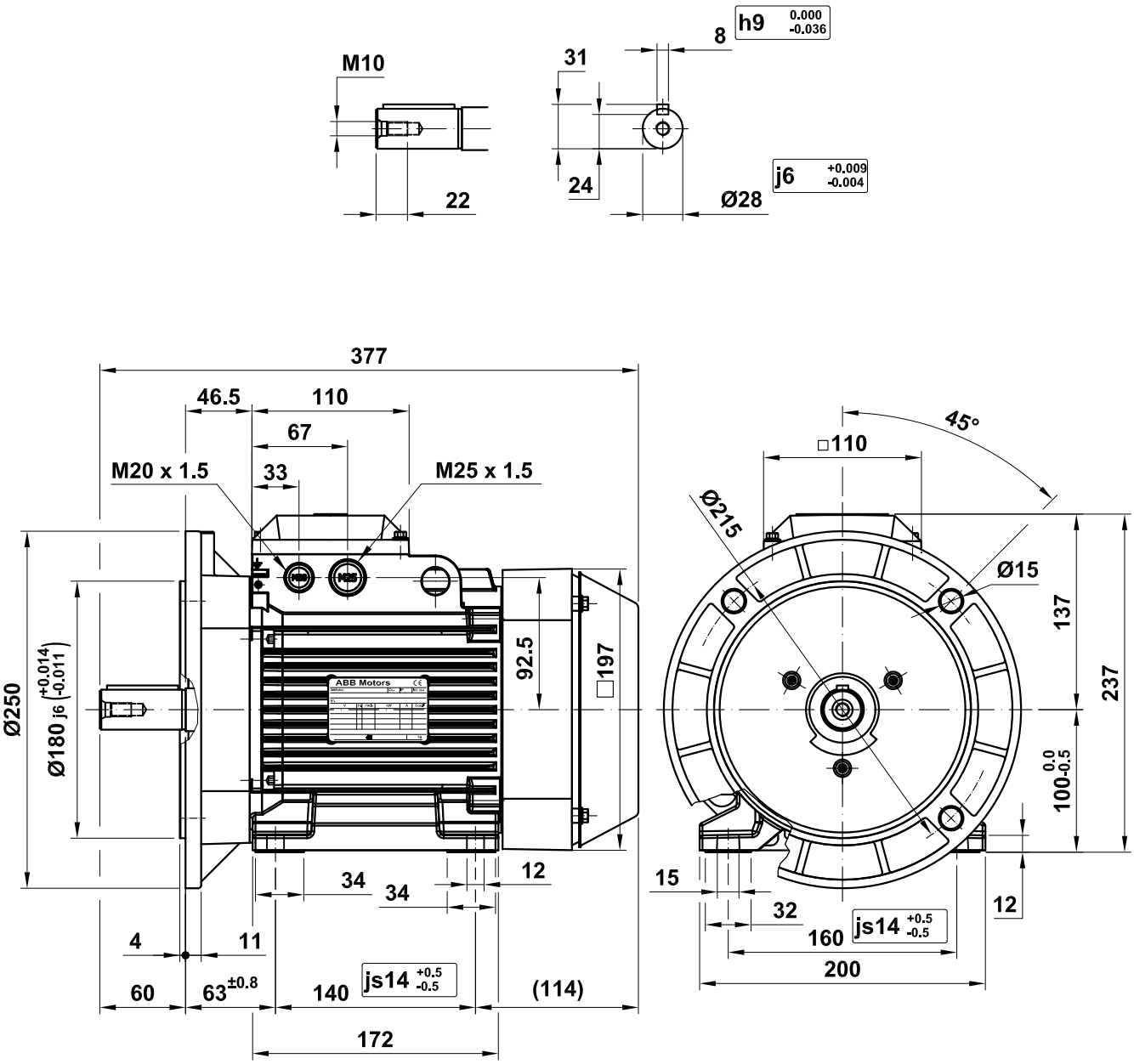

M3AA 100 LD

+334 +335 +336 +337 +456

Motor Dimension Print	Motor Type : M3AA 100 LD	Document Nº : 3GZW500810-10

Description :

Motor foot and flange mounted IM2001 (FF-215)

Unit : ABB AB, LV Motors, Sweden	Issued by : Enric Sáenz	Replaces :
Date : 2014-01-21	Approved by : Michael Pettersson	Replaced by :
	Customer Reference :	

ABB