18-06-15 Valid without signature

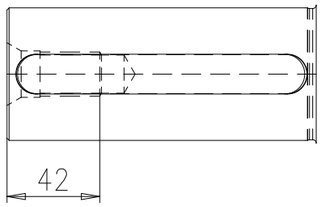

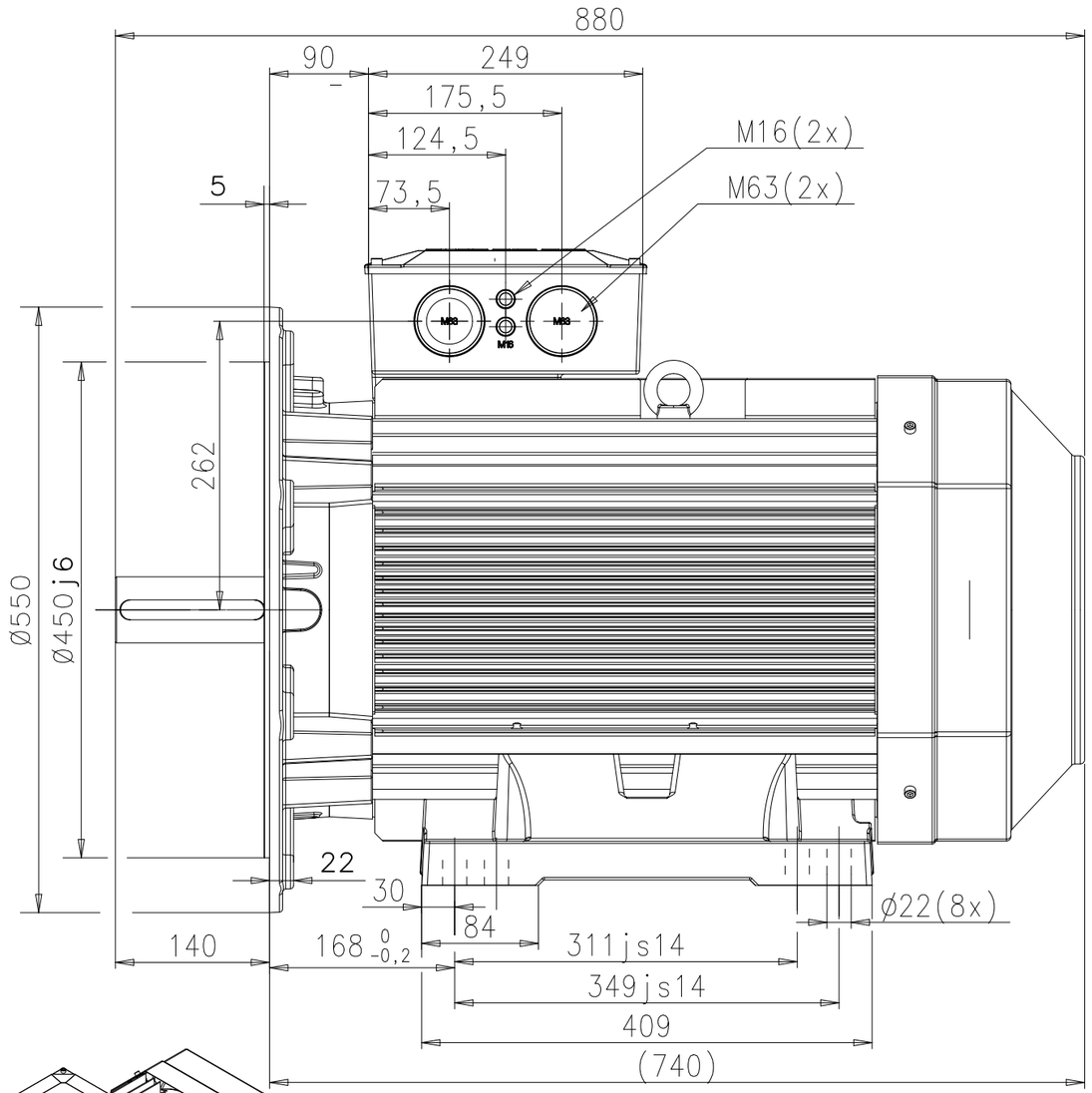

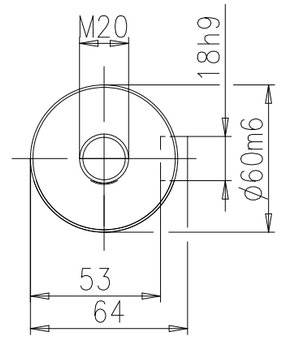

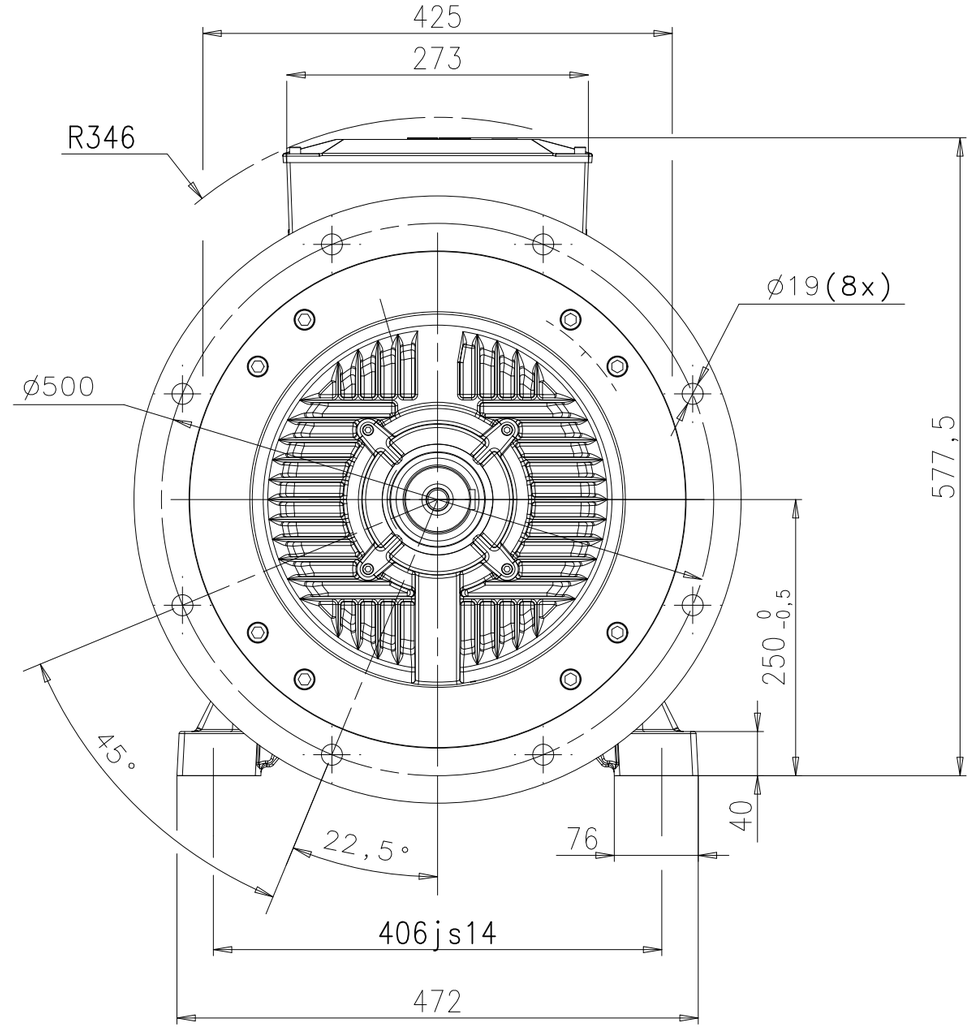

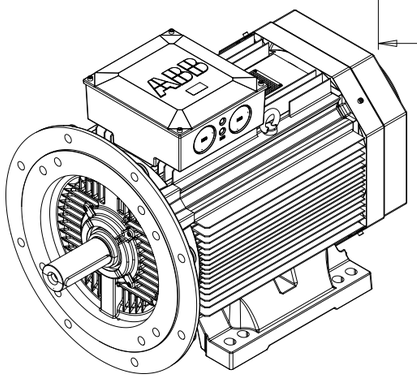

Prepared 2015-06-17 Victor Andersson	Separate part list ☐ with separate No. ☐	Title DIMENSION PRINT	Scale
Reviewed	Responsible department DMMG/LMATP		
Approved 2015-06-18 Oskar Holmqvist	Original dwg		Language EN
Distribution / Functional code	Order No. / Weight	Type: M3AA 250 / Mounting: IM2001	Size A3
ABB BU Motors and Generators		Document No. 3GZW500625-27 / Revision A	Sheet 1/1

We reserve all rights in this document and in the information contained therein. Reproduction, use or disclosure to third parties without express authority is strictly forbidden.
© ABB BU Motors and Generators

Symbols for roughness according to ISO 1302

General tolerances for linear and angular dimensions and geometrical tolerances:

ABBA3CF1

I-DEAS