18-06-15 Valid without signature

We reserve all rights in this document and in the information contained therein. Reproduction, use or disclosure to third parties without express authority is strictly forbidden.
© ABB BU Motors and Generators

Symbols for roughness according to ISO 1302

General tolerances for linear and angular dimensions and geometrical tolerances:

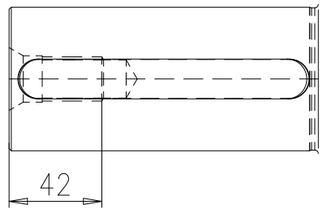


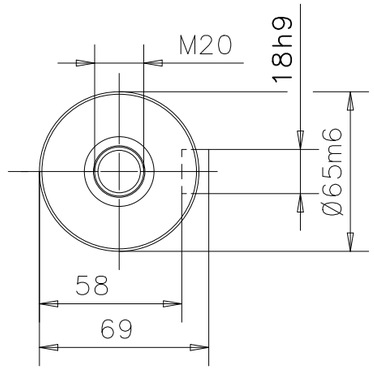


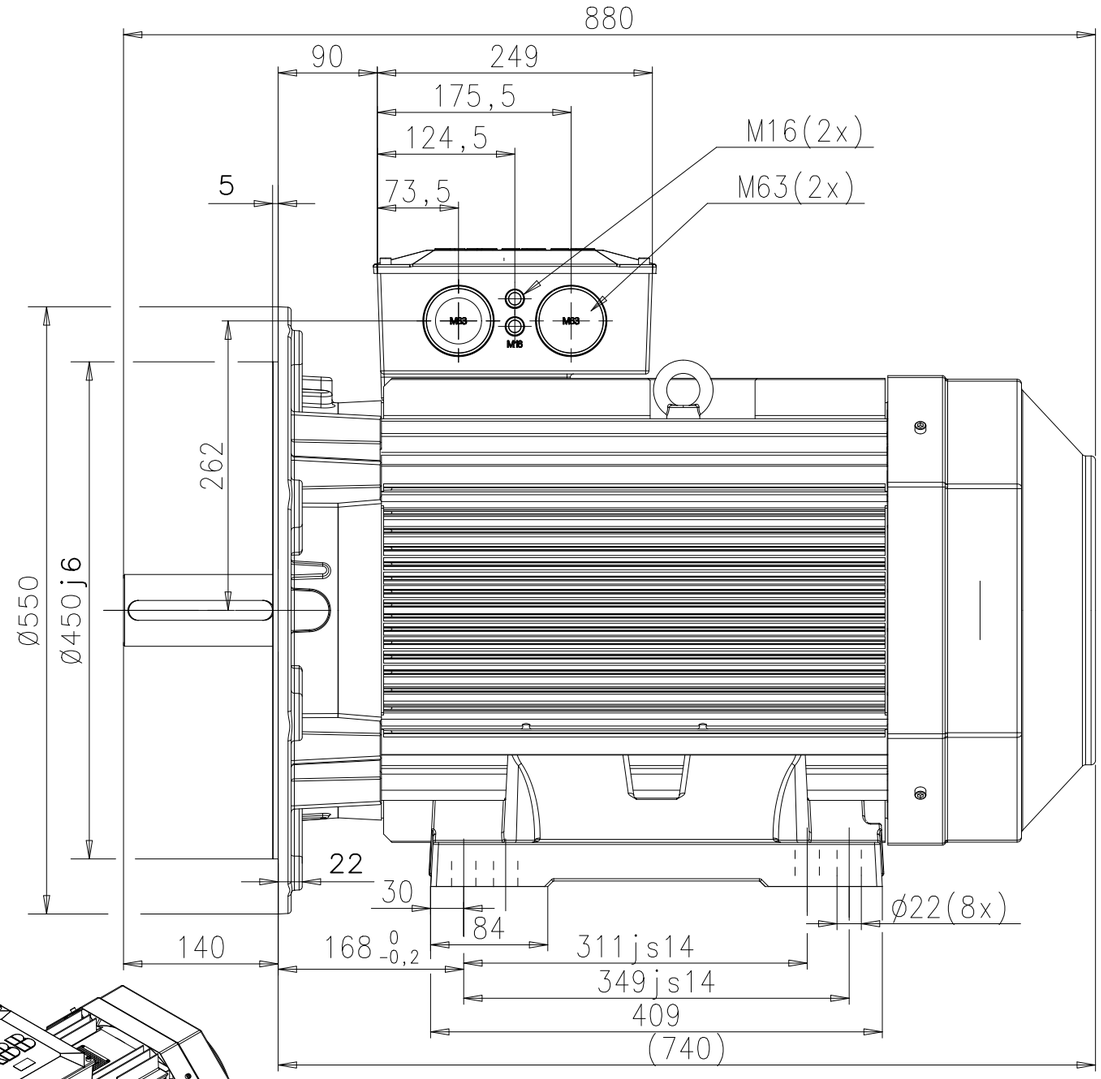


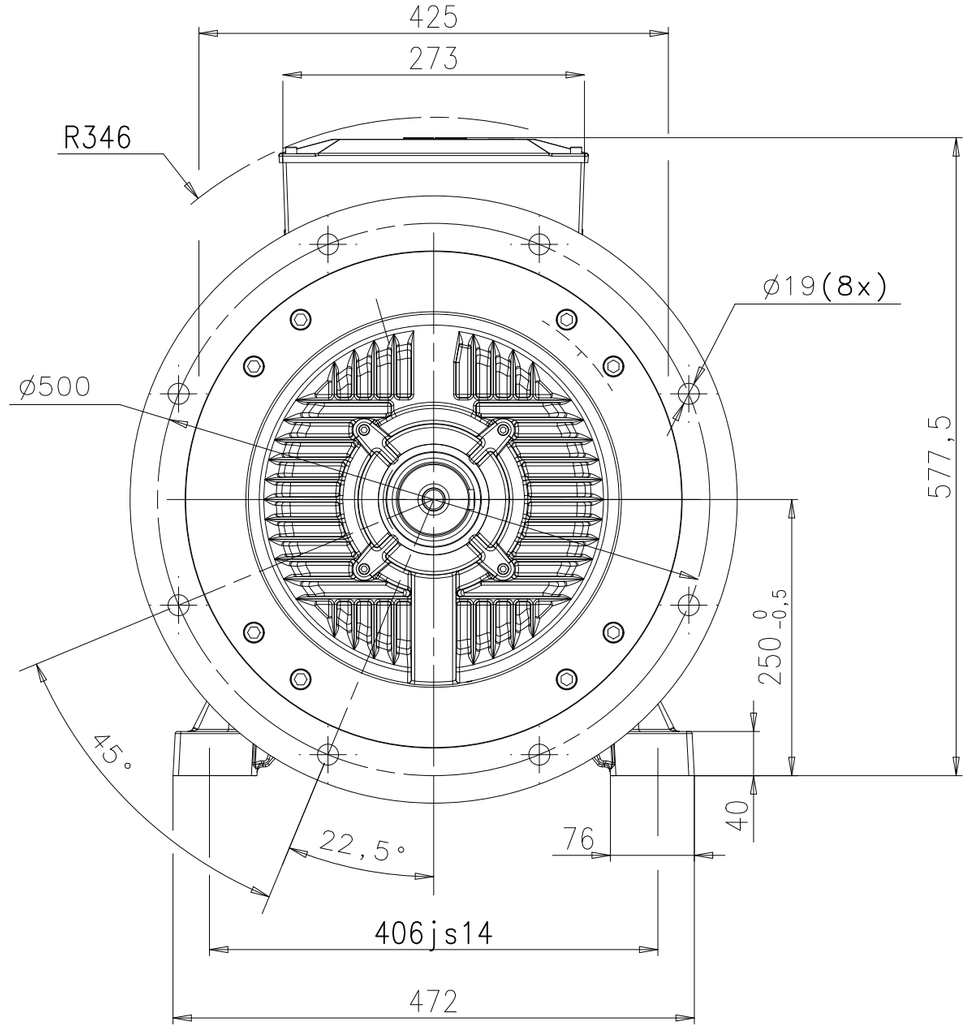


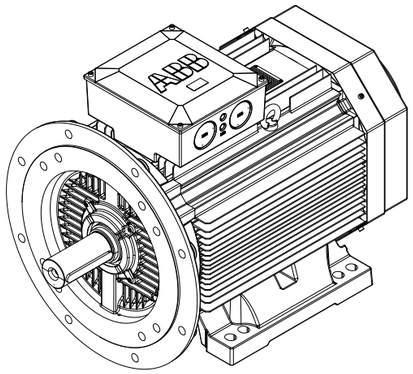

| | | | |
|---|---|---|---|
| Prepared: 2015-06-18 Victor Andersson | Separate part list ☐ with separate No. ☐ | Title: DIMENSION PRINT | Scale |
| Reviewed | Responsible department: DMMG/LMATP | | |
| Approved: 2015-06-18 Oskar Holmqvist | Original dwg | | Language: EN |
| Distribution / Functional code | Order No. / Weight | Type: M3AA 250 / Mounting: IM2001 | Size: A3 |
| ABB BU Motors and Generators | | Document No.: 3GZW500625-30 / Revision: A | Sheet: 1/1 |

ABBA3CF1 I-DEAS