We reserve all rights in this document and in the information contained therein. Reproduction, use or disclosure to third parties without express authority is strictly forbidden.
© Copyright ABB.

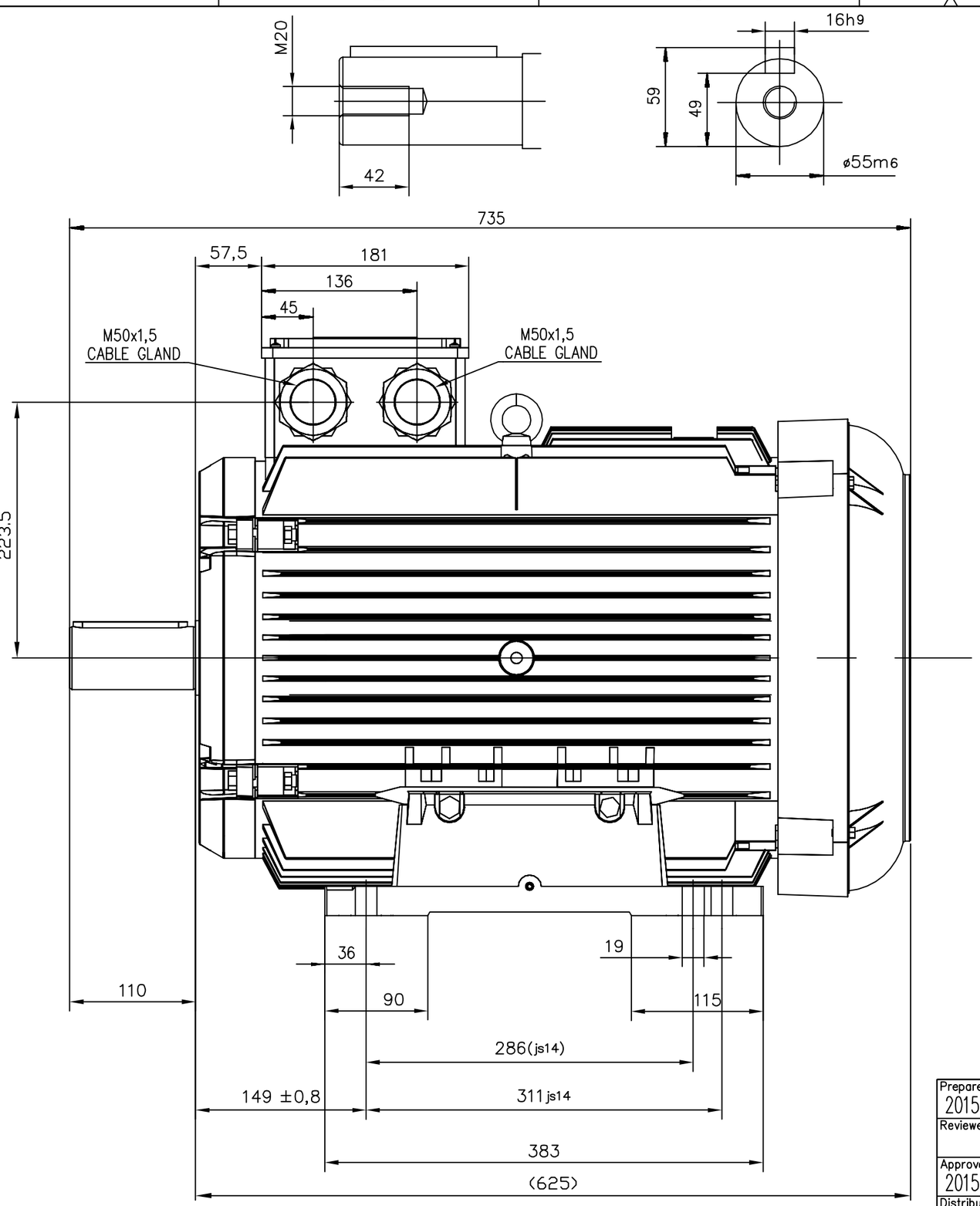

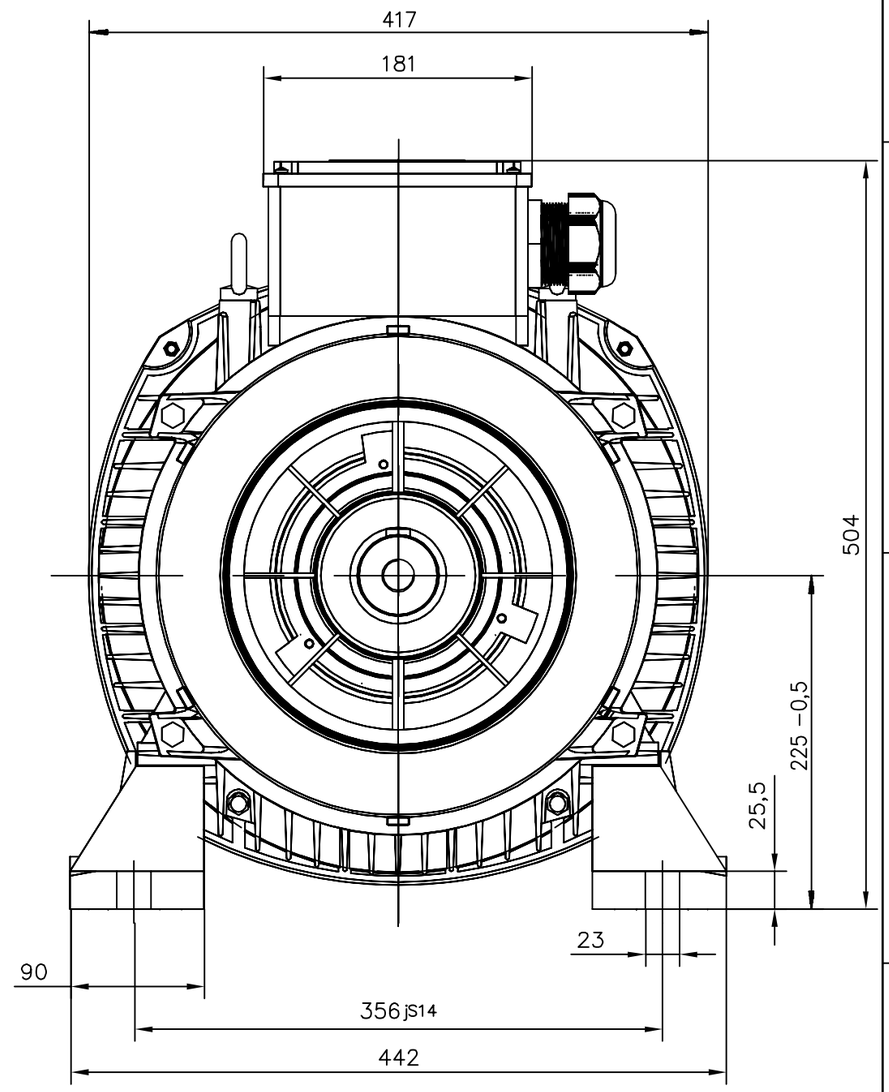

Prepared 2015-06-25 V.ANDERSSON	Separate part list ☐ with separate No. ☐	Title Motor Dimension Print	Scale
Reviewed	Responsible Department DMMG/LMATM		Language EN
Approved 2015-06-25 E.NORDMARK	Original Dwg		
Distribution / Functional Code	Order No. / Weight	Type M1AA 225 / Mounting IM1001	Size A3
ABB Motors and Generators		Document No. 3GZW500622-35 / Revision A	Sheet 1/1

ABBA3BF1 AutoCAD