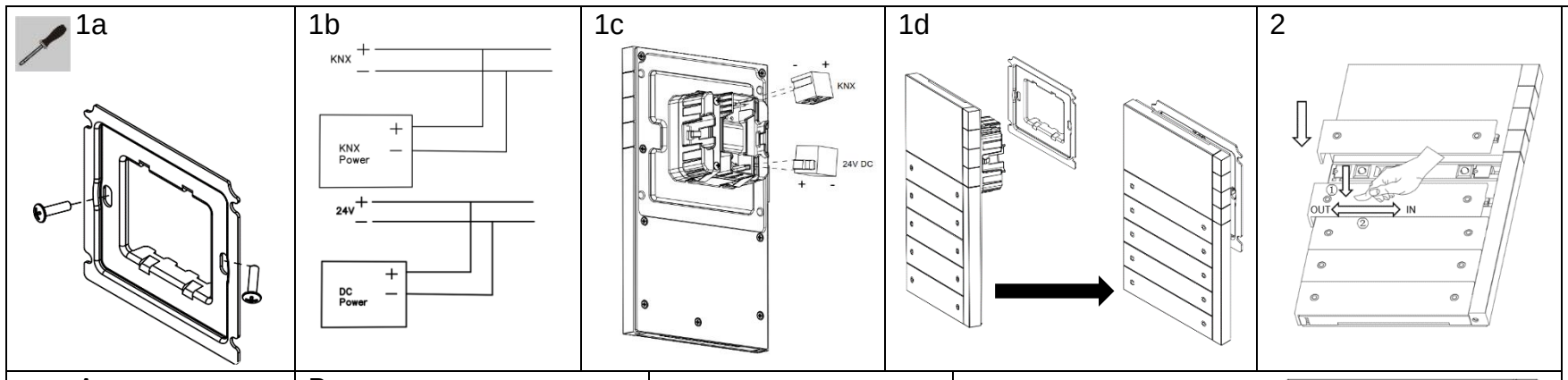

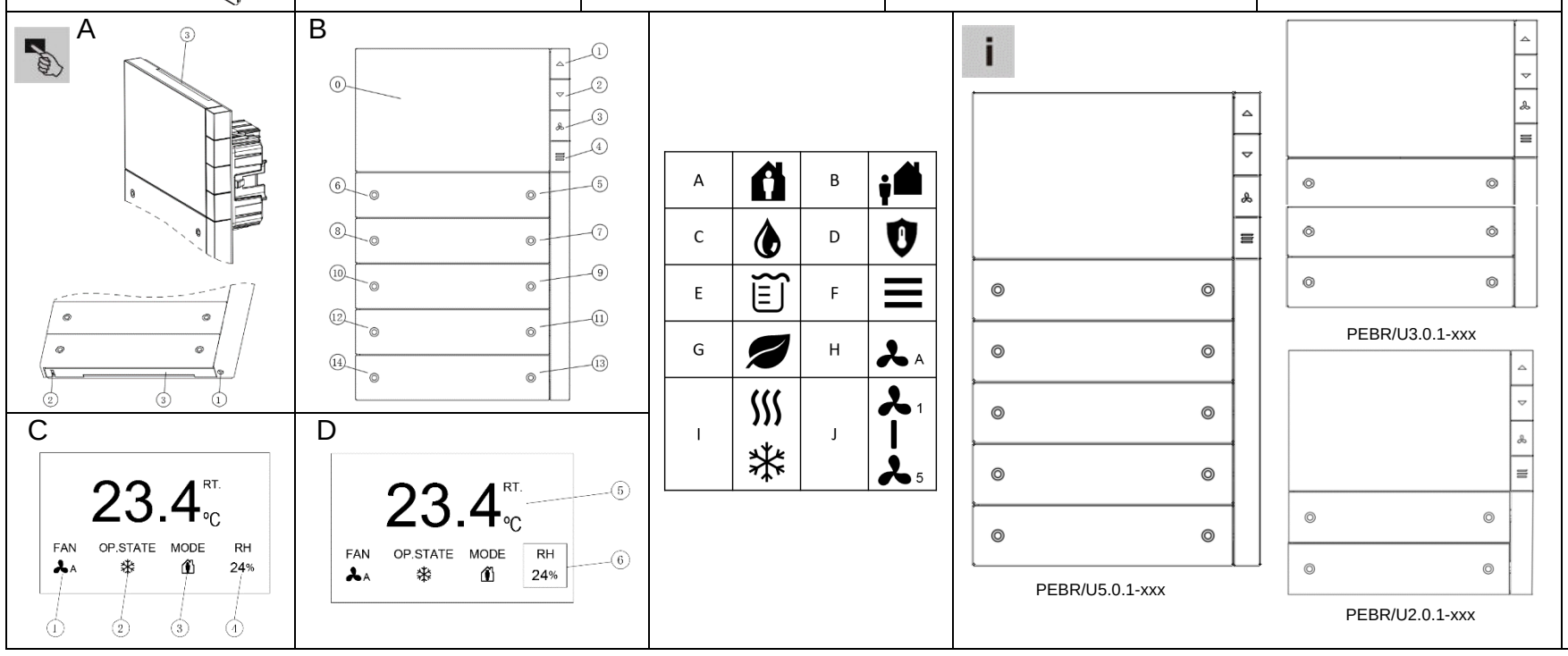

PEONIA Flush mounted control element 2/4 gang with RTC

PEBR/U2.0.1-xxx

PEONIA Flush mounted control element 3/6 gang with RTC

PEBR/U3.0.1-xxx

PEONIA Flush mounted control element 5/10 gang with RTC

PEBR/U5.0.1-xxx

中文

PEONIA 系列智能控制面板

警告

直接或间接接触导电零件时，可能有触电危险。可能造成电击、灼伤或死亡。

- 安装和拆卸前应先切断电源！
- 仅可由专业人员在 230V 电网上进行作业。

www.abb.com/lowvoltage/directives

- 请仔细阅读并妥善保管安装说明。
- 更多用户信息和参数及调试信息请查询 www.abb.com/knx，或扫描文中二维码。

预期用途

例如，智能面板（集成了总线耦合器）可与开关驱动器相连，用于灯光开闭控制。
更多产品功能请参阅相关技术文档（扫描二维码）。

ABB i-bus®KNX 智能温控面板
PEONIA 系列智能温控面板，2 联/4 键，3 联/6 键，5 联/10 键，嵌入式安装。

产品说明

PEONIA 智能温控面板，集成了房间温度控制器，TFT 显示屏（支持动态显示），温度传感器以及接近感应传感器。支持替换式按键及按键图标。在产品的上端和下端分别具有 LED 氛围灯。在功能上，作为 KNX 驱动器的控制设备。

技术参数

温度范围	-5 °C ~ +45 °C
保护等级	IP 20
电线尺寸	2 x 2 x 0.8，0.5 mm² – 2 x 1 mm²
耗电量	最大 12 mA
供电电压	24 VDC 通过 KNX 总线供电
辅助电源	24 VDC

安装

仅可安装于室内干燥的嵌入式安装底盒中。
须遵循现行有效的安装规定：
1a. 旋紧随附的安装支架于嵌入式安装底盒上
1b. 将总线与 KNX 端子相连，将辅助电源线与辅助端子相连（KNX 端子颜色：红黑色；辅助端子颜色：黄白色）
1c. 将 KNX 端子及辅助端子分别插入 ABB i-bus®KNX 智能面板背面相应的安装槽内
1d. 将 ABB i-bus®KNX 智能面插入安装支架内

2. 安装/替换按键

[A] 调试

可通过 ETS 编程调试软件来实现各类功能。 每一联的按键功能取决于各自在应用软件中所配置的参数。

- 具体的编程及参数配置信息可参阅产品技术手册（扫描二维码）。
- 始终使用最新的固件版本。电子目录中包含用于固件更新的最新下载文件（www.abb.com/knx）。更新通过 KNX 总线进行。详情请参阅产品技术手册（扫描二维码）。

[1] 编程按钮。按下编程按钮，产品下端的 LED 氛围灯变为红色，表示切换到编程模式
[2] 温度传感器
[3] LED 氛围灯（在产品上端和下端）

[B] 操作

通用控制配置
[0] TFT 显示屏
[1] 向上选择
[2] 向下选择
[3] 风速调节
[4] 菜单键, 开/关
[5] 开灯
[6] 关灯
[7] 灯光调暗/关灯
[8] 灯光调亮/开灯
[9] 关闭窗帘
[10] 打开窗帘
[11] 阅读场景
[12] 聚会场景
[13] 全关场景
[14] 全开场景

[5]~[14]的按键功能可以通过 ETS 编程调试软件进行更改，配置以适应用户偏好

[C+D] 显示/信息

[C] 房间温度控制功能，操作
[1] 风速
[2] 运行模式
[3] 情景模式：舒适模式，待机模式，霜冻/过热保护模式
[4] 扩展显示（时间， PM2.5， CO_2，湿度，VOC，室温）

显示布局
[5] 主温度显示（室温或设定温度，°C/°F）
[6] 扩展显示

图标

A	舒适模式
B	待机模式
C	凝露报警
D	霜冻/过热保护模式
E	凝霜报警
F	菜单键，开/关
G	经济模式
H	风速自动
I	制冷/制热模式
J	风速档位调节

售后服务

北京 ABB 低压电器有限公司
北京经济技术开发区康定街17号
http://www.abb.com/knx
Tel: +86 400-820-9696

English

PEONIA Flush mounted control element device

WARNING

Risk of death and fire!
Dangerous currents flow through the body when coming into direct or indirect contact with live components. This can result in electric shock, burns or even death. Work improperly carried out on current-carrying parts can cause fires.

- Disconnect the mains power supply prior to installation and/or disassembly!
- Permit work on the 230V supply system to be perform only by specialist staff.

www.abb.com/lowvoltage/directives

- Please read the mounting instructions carefully and keep them for future use.
- Additional user information and detailed information for parameter setting is available at www.abb.com or by scanning the QR code.

Intended use

The sensor unit (with integrated bus coupler) can be assign to an available switch actuator. The devices serve for switching processes.
For detailed information about the range of functions see the technical reference manual (see QR code).

ABB i-bus®KNX Sensor
PEONIA Flush mounted control element, 2/4 gang with RTC, 3/6 gang with RTC, 5/10 gang with RTC.

Product features

PEONIA control element are integrate with room temperature controller, TFT display (dynamic graphic), temperature sensor and proximity sensor. Rocker are exchangeable with corresponding icon. LED are the top and bottom functioning as ambient lighting. Function as input sensor for controlling KNX actuators device.

Technical data

Ambient temperature	-5 °C ~ +45 °C
Protection	IP 20
Cable connection	2 x 2 x 0.8，0.5 mm² – 2 x 1 mm²
Bus subscribers	=> 12 mA
Power supply	24 VDC (via bus line)
Auxiliary power supply	24 VDC

Mounting

They may only be installed in dry interior rooms in flush mounted boxes. Observe the current valid regulations.
1a. Screw and install mounting backet onto flush mounted box
1b. Connect bus line onto KNX connector, connect aux power supply onto aux connector (KNX connector color：Red and Black；aux connector：Yellow and White)
1c. Insert KNX connector and aux connector onto the back of ABB i-bus® KNX sensor respectively
1d. Insert ABB i-bus®KNX sensor onto mounting bracket

2. Install / replace of rocker

[A] Commissioning

Various functions can be implement via the ETS commissioning software. The function of the push-button coupling unit is dependent on the parameters selected via the respective software application.

- Detailed information about commissioning and parameterization is available in the technical reference manual (see QR code).
- Always use the latest firmware version. The latest download files for the firmware update are contained in the electronic catalogue (www.abb.com/knx). The update is carry out via the KNX bus. For a detailed description, see the technical reference manual (see QR code).

[1] Programming button. Press the programming button, the bottom LED ambient light turns red indicating switchover to programming mode
[2] Temperature sensor
[3] Ambient LED (top and bottom)

[B] Operation

Common control configuration
[0] TFT display screen
[1] Scroll up selection
[2] Scroll down selection
[3] Fan speed adjustment
[4] Menu button, on/off
[5] Light off
[6] Light on
[7] Dim light down/off
[8] Dim light up/on
[9] Blind close/down
[10] Blind open/up
[11] Reading scene
[12] Party scene
[13] Master off scene
[14] Master on scene

[5] ~[14] Button function can be change and configure to suit user preference via ETS commissioning software

[C+D] Displays / messages

[C] RTC function, operation
[1] Fan speed
[2] Operating state
[3] Mode: comfort mode, Standby mode, frost/heat protection mode
[4] Subdisplay (time, PM2.5, CO_2, Humility, VOC, Room temperature)

[D] Display layout
[5] Main display, (Real time/setpoint, **°C/** °F)
[6] Subdisplay

Icons

A	Comfort mode
B	Standby mode
C	Dew point warning
D	Frost/Heat protection mode
E	Condensation warning
F	Menu button, on/off
G	ECO Mode
H	Fan speed auto
I	Switchover heating/cooling
J	Fan speed levels adjustment

Service

ABB LV Installation Materials Co., Ltd.Beijing
No. 17 Kangding Street, Beijing Economic-Technological Development Area 100176, P.R.China
http://www.abb.com/knx
Tel: +86 400-820-9696