ABB motion control

User’s manual
NextMove *e*100 motion controller

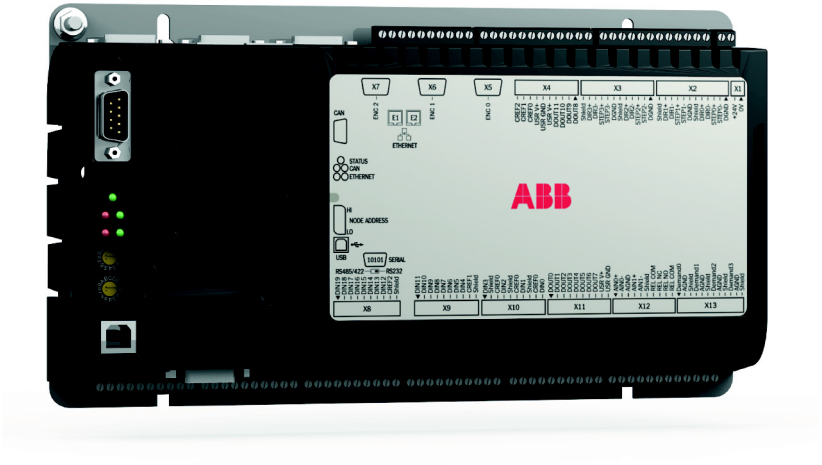

MN1941WEN

Power and productivity
for a better world™

Contents

1 General Information

2 Introduction

2.1 NextMove e100 features 2-1

2.2 Receiving and inspection 2-3

2.2.1 Identifying the catalog number 2-3

2.3 Units and abbreviations 2-4

3 Basic Installation

3.1 Introduction 3-1

3.1.1 Location requirements 3-1

3.1.2 Mounting the NextMove e100 3-2

3.1.3 Other requirements for installation 3-3

4 Input / Output

4.1 Introduction 4-1

4.1.1 Connector locations 4-2

4.2 Analog I/O 4-3

4.2.1 Analog inputs 4-3

4.2.2 Analog outputs 4-5

4.3 Digital I/O 4-7

4.3.1 Digital inputs 4-7

4.3.2 Digital outputs and relay 4-12

4.3.3 Stepper control outputs - models NXE100-16xxDx 4-14

4.3.4 Stepper control outputs - models NXE100-16xxSx 4-15

4.4 Other I/O 4-16

4.4.1 Encoder inputs 0-2 4-16

4.4.2 Node ID selector switches 4-18

4.5 USB and serial communication 4-21

4.5.1 USB port 4-21

4.5.2 Serial port 4-22

4.5.3 Using RS232 4-22

4.5.4 Multidrop using RS485 / RS422 4-23

4.5.5 Connecting serial Baldor HMI Operator Panels 4-24

4.6 Ethernet interface 4-25

4.6.1 TCP/IP 4-25

4.6.2 Ethernet POWERLINK 4-26

4.6.3 Ethernet connectors 4-27

4.7 CAN interface 4-28
4.7.1 CAN connector 4-28
4.7.2 CAN wiring 4-28
4.7.3 CANopen 4-29
4.8 Connection summary - minimum wiring (local axis) 4-31
4.9 Connection summary - minimum wiring (remote axis) 4-33

5 Operation
5.1 Introduction 5-1
5.1.1 Connecting the NextMove e100 to the PC 5-1
5.1.2 Installing Mint WorkBench 5-2
5.1.3 Starting the NextMove e100 5-2
5.1.4 Preliminary checks 5-2
5.1.5 Power on checks 5-2
5.1.6 Installing the USB driver 5-3
5.1.7 Configuring the TCP/IP connection (optional) 5-4
5.2 Mint Machine Center 5-5
5.2.1 Starting MMC 5-7
5.2.2 Viewing remote nodes connected over Ethernet (optional) 5-8
5.3 Mint WorkBench 5-9
5.3.1 Help file 5-10
5.3.2 Starting Mint WorkBench 5-11
5.4 Configuring axes 5-13
5.4.1 Local axes, remote axes and profilers 5-13
5.4.2 Configuring remote axes 5-14
5.4.3 Configuring local axes 5-16
5.4.4 Selecting a scale 5-17
5.4.5 Setting the drive enable output (optional, local axes only) 5-19
5.4.6 Testing the drive enable output 5-21
5.5 Local stepper axis - testing 5-22
5.5.1 Testing the output 5-22
5.6 Local servo axis - testing and tuning 5-23
5.6.1 Testing the demand output 5-23
5.6.2 An introduction to closed loop control 5-25
5.7 Local servo axis - tuning for current control 5-28
5.7.1 Selecting servo loop gains 5-28
5.7.2 Underdamped response 5-30
5.7.3 Overdamped response 5-31
5.7.4 Critically damped response 5-32
5.8 Local servo axis - tuning for velocity control 5-33
5.8.1 Calculating KVELFF 5-33
5.8.2 Adjusting KPROP 5-36
5.9 Local servo axis - eliminating steady-state errors 5-38

5.10 Local digital input/output configuration 5-39
5.10.1 Digital input configuration 5-39
5.10.2 Digital output configuration 5-40

6 Troubleshooting
6.1 Introduction 6-1
6.1.1 Problem diagnosis. 6-1
6.1.2 SupportMe feature 6-1
6.2 NextMove e100 indicators 6-2
6.2.1 STATUS LED 6-2
6.2.2 CAN LEDs. 6-2
6.2.3 ETHERNET LEDs 6-3
6.2.4 Communication 6-4
6.2.5 Motor control 6-4
6.2.6 Mint WorkBench 6-5
6.2.7 Ethernet. 6-6
6.2.8 CANopen. 6-6

7 Specifications
7.1 Introduction 7-1
7.1.1 Input power 7-1
7.1.2 Analog inputs 7-1
7.1.3 Analog outputs 7-1
7.1.4 Digital inputs 7-2
7.1.5 Digital outputs 7-2
7.1.6 Relay output 7-2
7.1.7 Stepper control outputs 7-3
7.1.8 Encoder inputs 7-3
7.1.9 Serial port 7-3
7.1.10 Ethernet interface 7-3
7.1.11 CAN interface 7-4
7.1.12 Environmental 7-4
7.1.13 Weights and dimensions 7-4

Appendices

A Accessories
A.1 Cables A-1
A.1.1 Feedback cables A-1
A.1.2 Ethernet cables A-1
A.1.3 24 V power supplies A-2

B Mint Keyword Summary

B.1 Introduction B-1
B.1.1 Keyword listing B-1

C CE Guidelines

C.1 Outline C-1
C.1.1 CE marking C-1
C.1.2 Compliance with the EMC Directive C-1
C.1.3 Use of CE compliant components C-2
C.1.4 EMC installation suggestions C-2
C.1.5 Wiring of shielded (screened) encoder cables C-2
C.2 RoHS Compliance C-2
C.3 Marks C-2

LT0231A08EN Copyright ABB Oy (c) 2016. All rights reserved.

This manual is copyrighted and all rights are reserved. This document or attached software may not, in whole or in part, be copied or reproduced in any form without the prior written consent of ABB.
ABB makes no representations or warranties with respect to the contents hereof and specifically disclaims any implied warranties of fitness for any particular purpose. The information in this document is subject to change without notice. ABB assumes no responsibility for any errors that may appear in this document.

Mint™ is a registered trademark of Baldor, a member of the ABB group.
Windows XP, Windows Vista and Windows 7 are registered trademarks of the Microsoft Corporation.
UL and cUL are registered trademarks of Underwriters Laboratories.

ABB Oy
Drives
P.O. Box 184
FI-00381 HELSINKI
FINLAND

Telephone +358 10 22 11
Fax +358 10 22 22681
E-mail: motionsupport.uk@gb.abb.com
Web site: www.abbmotion.com

See rear cover for other international offices.

Safety Notice

Only qualified personnel should attempt to start-up, program or troubleshoot this equipment.
This equipment may be connected to other machines that have rotating parts or parts that are controlled by this equipment. Improper use can cause serious or fatal injury.

Precautions

WARNING

Do not touch any circuit board, power device or electrical connection before you first ensure that no high voltage is present at this equipment or other equipment to which it is connected. Electrical shock can cause serious or fatal injury. Only qualified personnel should attempt to start-up, program or troubleshoot this equipment.

WARNING

Be sure that you are completely familiar with the safe operation and programming of this equipment. This equipment may be connected to other machines that have rotating parts or parts that are controlled by this equipment. Improper use can cause serious or fatal injury.

WARNING

MEDICAL DEVICE / PACEMAKER DANGER: Magnetic and electromagnetic fields in the vicinity of current carrying conductors and industrial motors can result in a serious health hazard to persons with cardiac pacemakers, internal cardiac defibrillators, neurostimulators, metal implants, cochlear implants, hearing aids, and other medical devices. To avoid risk, stay away from the area surrounding a motor and its current carrying conductors.

CAUTION

The stop input to this equipment should not be used as the single means of achieving a safety critical stop. Drive disable, motor disconnect, motor brake and other means should be used as appropriate.

CAUTION

Improper operation or programming may cause violent motion of the motor shaft and driven equipment. Be certain that unexpected motor shaft movement will not cause injury to personnel or damage to equipment. Peak torque of several times the rated motor torque can occur during control failure.

NOTICE

The safe integration of this equipment into a machine system is the responsibility of the machine designer. Be sure to comply with the local safety requirements at the place where the machine is to be used. In Europe these are the Machinery Directive, the ElectroMagnetic Compatibility Directive and the Low Voltage Directive. In the United States this is the National Electrical code and local codes.

NOTICE

Electrical components can be damaged by static electricity. Use ESD (electrostatic discharge) procedures when handling this equipment.

2.1 NextMove *e*100 features

NextMove *e*100 is a high performance multi-axis intelligent controller for servo and stepper motors.

NextMove *e*100 features the Mint motion control language. Mint is a structured form of Basic, custom designed for stepper or servo motion control applications. It allows you to get started very quickly with simple motion control programs. In addition, Mint includes a wide range of powerful commands for complex applications.

Standard features include:

- Control of up to 16 axes, including 4 stepper and 3 servo axes (on board), plus external axes over the Ethernet POWERLINK connection.
- Point to point moves, software cams and gearing, complex path control, splines etc.
- 20 general purpose digital inputs, software configurable as level or edge triggered.
- 12 general purpose digital outputs and 1 relay output.
- 2 differential analog inputs with 12-bit resolution.
- 4 single-ended analog outputs with 12-bit resolution.
- USB 1.1 serial port (compatible with USB 2.0 and USB 3.0).
- RS232 / RS485/422 serial port for programming or connection to an HMI operator panel.
- Ethernet POWERLINK & TCP/IP support: Twin Ethernet ports with integrated hub for communication with host PC or other Ethernet POWERLINK devices.
- CANopen protocol for communication with Mint controllers and other third party devices.
- Programmable in Mint.

This manual is intended to guide you through the installation of NextMove *e*100.

The chapters should be read in sequence.

The *Basic Installation* section describes the mechanical installation of the NextMove *e*100. The following sections require knowledge of the low level input/output requirements of the installation and an understanding of computer software installation. If you are not qualified in these areas you should seek assistance before proceeding.

Note: You can check that you have the latest firmware and Mint WorkBench releases by visiting the website www.abbmotion.com.

2.2 Receiving and inspection

When you receive your NextMove *e*100, there are several things you should do immediately:

1. Check the condition of the packaging and report any damage immediately to the carrier that delivered your NextMove *e*100.
2. Remove the NextMove *e*100 from the shipping container and remove all packing material. The container and packing materials may be retained for future shipment.
3. Verify that the catalog number of the NextMove *e*100 you received is the same as the catalog number listed on your purchase order. The catalog/part number is described in the next section.
4. Inspect the NextMove *e*100 for external damage during shipment and report any damage to the carrier that delivered it.
5. If the NextMove *e*100 is to be stored for several weeks before use, be sure that it is stored in a location that conforms to the storage humidity and temperature specifications shown in section 3.1.1.

2.2.1 Identifying the catalog number

Different models of NextMove *e*100 are available. As a reminder of which product has been installed, it is a good idea to write the catalog number in the space provided below.

NextMove e100 catalog number: NXE100-16____D_ or NXE100-16____S_

Installed in: _____ **Date:** _____

A description of the catalog numbers are shown in the following table:

Catalog number	Description
NXE100-1608D*x*	8 axes, RS422 differential stepper outputs.
NXE100-1608S*x*	8 axes, open collector (single-ended) stepper outputs.
NXE100-1612D*x*	12 axes, RS422 differential stepper outputs.
NXE100-1612S*x*	12 axes, open collector (single-ended) stepper outputs.
NXE100-1616D*x*	16 axes, RS422 differential stepper outputs.
NXE100-1616S*x*	16 axes, open collector (single-ended) stepper outputs.

Note: The ***x*** represents a letter indicating the hardware revision. This does not affect the capabilities of the NextMove *e*100 unless otherwise stated.

2.3 Units and abbreviations

The following units and abbreviations may appear in this manual:

V. . . . . Volt (also V AC and V DC)
W . . . . . Watt
A. . . . . Ampere
Ω . . . . . Ohm
mΩ . . . . . milliohm
µF. . . . . microfarad
pF. . . . . picofarad
mH . . . . . millihenry

Φ . . . . . phase
ms . . . . . millisecond
µs . . . . . microsecond
ns . . . . . nanosecond

mm . . . . . millimeter
m . . . . . meter
in . . . . . inch
ft. . . . . feet
lbf-in . . . . . pound force inch (torque)
N·m . . . . . Newton meter (torque)

ADC . . . . . Analog to Digital Converter
ASCII . . . . . American Standard Code for Information Interchange
AWG . . . . . American Wire Gauge
CAL . . . . . CAN Application Layer
CAN . . . . . Controller Area Network
CDROM . . . . . Compact Disc Read Only Memory
CiA . . . . . CAN in Automation International Users and Manufacturers Group e.V.
CTRL+E . . . . . on the PC keyboard, press **Ctrl** then **E** at the same time.
DAC . . . . . Digital to Analog Converter
DS301 . . . . . CiA CANopen Application Layer and Communication Profile
DS401 . . . . . CiA Device Profile for Generic I/O Devices
DS402 . . . . . CiA Device Profile for Drives and Motion Control
DS403 . . . . . CiA Device Profile for HMIs
EDS . . . . . Electronic Data Sheet
EMC. . . . . Electromagnetic Compatibility
EPL . . . . . Ethernet POWERLINK
HMI . . . . . Human Machine Interface
ISO. . . . . International Standards Organization
Kbaud. . . . . kilobaud (the same as Kbit/s in most applications)
LCD . . . . . Liquid Crystal Display
Mbps . . . . . megabits/s
MB . . . . . megabytes
MMC . . . . . Mint Machine Center
(NC) . . . . . Not Connected
RF . . . . . Radio Frequency
SSI . . . . . Synchronous Serial Interface
TCP/IP . . . . . Transmission Control Protocol / Internet Protocol
UDP . . . . . User Datagram Protocol

3.1 Introduction

You should read all the sections in *Basic Installation*.
It is important that the correct steps are followed when installing the NextMove *e*100.
This section describes the mechanical installation of the NextMove *e*100.

3.1.1 Location requirements

You must read and understand this section before beginning the installation.

NOTICE

To prevent equipment damage, be certain that input and output signals are powered and referenced correctly.

NOTICE

To ensure reliable performance of this equipment be certain that all signals to/ from the NextMove *e*100 are shielded correctly.

NOTICE

Avoid locating the NextMove *e*100 immediately above or beside heat generating equipment, or directly below water steam pipes.

NOTICE

Avoid locating the NextMove *e*100 in the vicinity of corrosive substances or vapors, metal particles and dust.

The safe operation of this equipment depends upon its use in the appropriate environment. The following points must be considered:

- The NextMove *e*100 is designed to be mounted indoors, permanently fixed and located.
- The NextMove *e*100 must be secured by the slots in the metal base.
- The NextMove *e*100 must be installed in an ambient temperature of 0 °C to 45 °C (32 °F to 113 °F).
- The NextMove *e*100 must be installed in relative humidity levels of less than 80% for temperatures up to 31 °C (87 °F) decreasing linearly to 50% relative humidity at 45 °C (113 °F), non-condensing.
- The NextMove *e*100 must be installed where the pollution degree according to IEC 60664-1 shall not exceed 2.
- There shall not be abnormal levels of nuclear radiation or X-rays.

3.1.2 Mounting the NextMove *e*100

NOTICE

Before touching the unit be sure to discharge static electricity from your body and clothing by touching a grounded metal surface. Alternatively, wear an earth strap while handling the unit.

Ensure you have read and understood the location requirements in section 3.1.1. Mount the NextMove *e*100 using the supplied M4 screws. For effective cooling, the NextMove *e*100 must be mounted on a smooth non-flammable vertical surface. Orientation must be as shown in Figure 1, with the two slots in the metal carrier / heat sink assembly at the bottom.

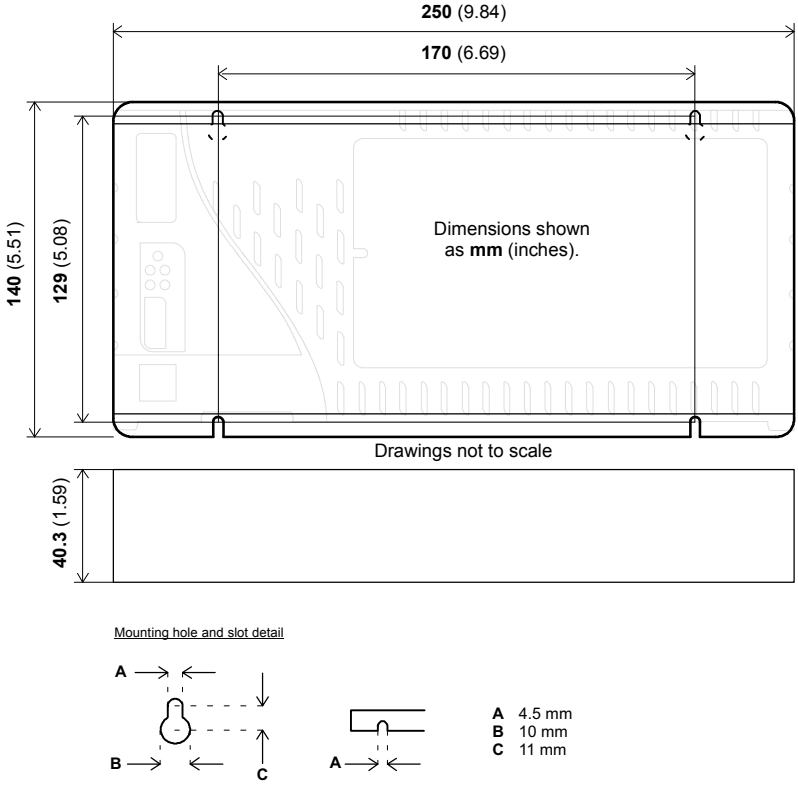

Figure 1: Package dimensions

There must be at least 20 mm (0.8 in) clearance between the NextMove *e*100 and neighboring equipment to allow sufficient cooling by natural convection. Remember to allow additional space around the edges to accommodate the mating connectors and associated wiring. For example, 70 mm (2.8 in) clearance will be required for connection of the serial port cable.

3.1.3 Other requirements for installation

- The NextMove *e*100 requires a 24 V DC power supply capable of supplying 2 A continuously. It is recommended that a separate fused 24 V DC supply is provided for the NextMove *e*100, with the fuse rated at 4 A maximum. If digital outputs are to be used, a supply will be required to drive them - see section 4.3.2.
- A PC that fulfills the following specification:

	Minimum specification
Processor	1 GHz
RAM	512 MB
Hard disk space	2 GB
CD-ROM	A CD-ROM drive
Serial port	USB port or RS232 or RS485 serial port, or Ethernet* port
Screen	1024 x 768, 16-bit color
Mouse	A mouse or similar pointing device
Operating system	Windows XP or newer, 32-bit or 64-bit

* The Ethernet configuration used by a normal office PC is not suitable for direct communication with the NextMove *e*100. It is recommended to install a separate dedicated Ethernet adapter in the PC, which can be configured for use with the NextMove *e*100. See section 5.1.7.

- A USB cable or RS485/422 serial cable.
- Your PC operating system user manual might be useful if you are not familiar with Windows.

4.1 Introduction

This section describes the various digital input and output capabilities of the NextMove *e*100, with descriptions of each of the connectors on the front panel.

The following conventions are used to refer to the inputs and outputs:

I/O . . . . . Input / Output
DIN . . . . . Digital Input
DOUT . . . . . Digital Output
AIN . . . . . Analog Input
AOUT . . . . . Analog Output

Common electrical connections use the following abbreviations:

AGND . . . . . Analog ground. Used by the analog input and output circuits.
USR V+. . . . . User power supply V+. Provides power to the digital outputs.
USR GND . . . . . User power supply ground. Return connection for the user power supply.
CREF*x* . . . . . Common reference. The common connection for a group of digital inputs.
DGND . . . . . Digital ground. Used by the stepper control outputs.

4.1.1 Connector locations

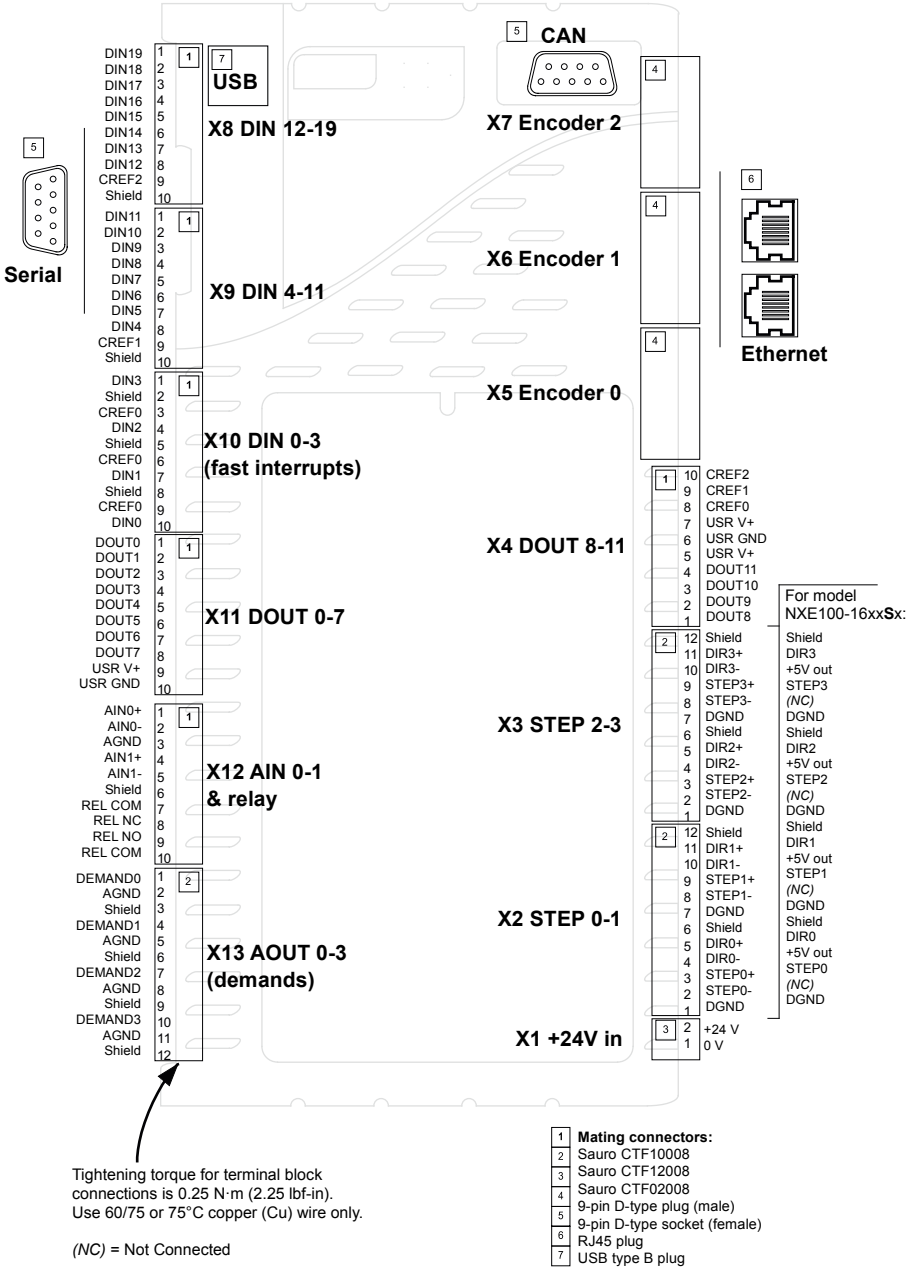

Tightening torque for terminal block connections is 0.25 N·m (2.25 lbf-in). Use 60/75 or 75°C copper (Cu) wire only.

(NC) = Not Connected

4.2 Analog I/O

The NextMove *e*100 provides:

- Two 12-bit resolution analog inputs.
- Four 12-bit resolution analog outputs.

4.2.1 Analog inputs

The analog inputs are available on connector X12, pins 1 & 2 (AIN0) and 4 & 5 (AIN1).

- Differential inputs.
- Voltage range: ±10 V.
- Resolution: 12-bit with sign.
- Input impedance: 120 kΩ.
- Sampling frequency: 4 kHz maximum, 2 kHz if both inputs are enabled.

The analog inputs pass through a differential buffer and second order low-pass filter with a cut-off frequency of approximately 1 kHz.

Both inputs are normally sampled at 2 kHz. However, an input can be disabled by setting `ADCMODE` to 4 (`_acOFF`). With one input disabled, the remaining input will be sampled at 4 kHz. In Mint, analog inputs can be read using the `ADC` keyword. See the Mint help file for full details of `ADC`, `ADCMODE` and other related `ADC`... keywords.

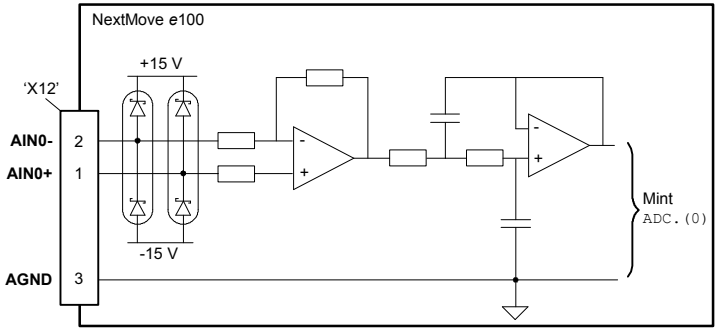

Figure 2: Analog input, AIN0 shown

For differential inputs connect input lines to AIN+ and AIN-. Leave AGND unconnected.

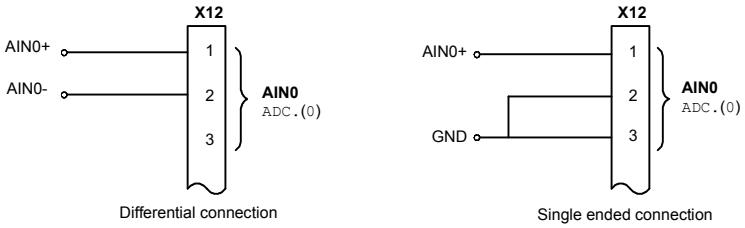

Figure 3: AIN0 analog input wiring

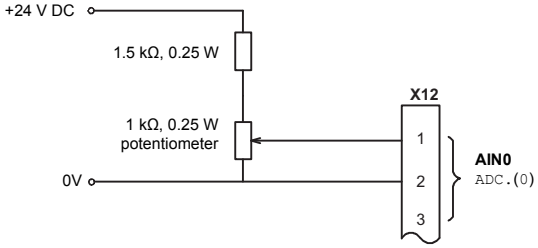

Figure 4: Typical input circuit to provide 0-10 V (approx.) input from a 24 V source

4.2.2 Analog outputs

The four analog outputs are available on connector X13, as shown in section 4.1.1.

- Four independent bipolar analog outputs.
- Output range: ±10 V DC (±0.1%).
- Resolution: 12-bit.
- Output current: 2.5 mA maximum per output.
- Update frequency: 1 kHz.

Mint and the Mint Motion Library use analog outputs Demand0 to Demand2 to control local drive amplifiers. Demand outputs 0 to 2 are used by axes configured as servo (see section 5.4.3). All of the outputs may be used as general purpose analog outputs, provided they have not been assigned to an axis - see the `DAC` keyword in the Mint help file.

The analog outputs may be used to drive loads of 4 kΩ or greater. Shielded twisted pair cable should be used. The shield connection should be made at one end only.

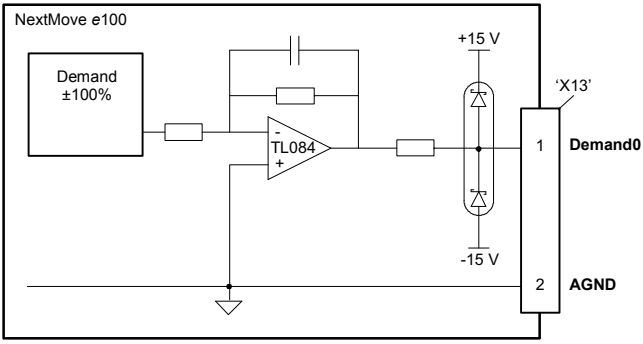

Figure 5: Analog output - Demand0 shown

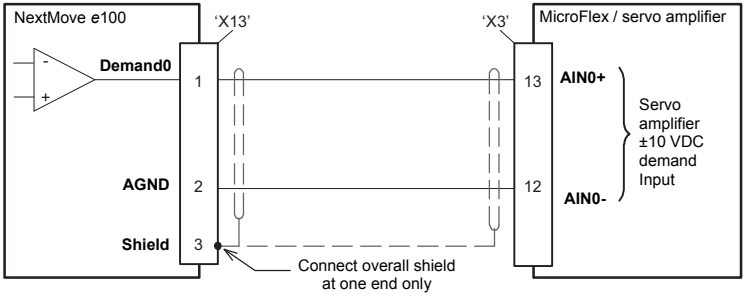

Figure 6: Analog output - typical connection to an ABB MicroFlex

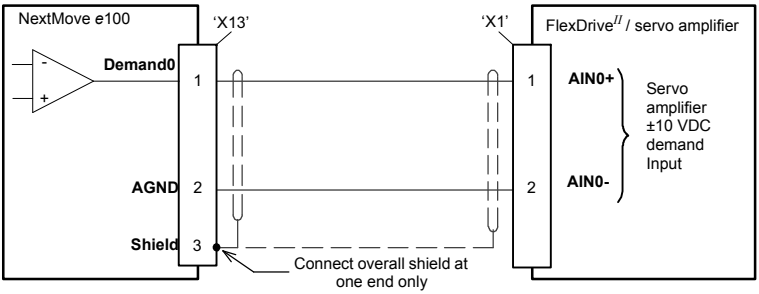

Figure 7: Analog output - typical connection to a Baldor FlexDrive^{II}, Flex+Drive^{II} or MintDrive^{II}

4.3 Digital I/O

The NextMove *e*100 provides:

- 20 general purpose digital inputs.
- 12 general purpose digital outputs.
- 1 general purpose relay output.

4.3.1 Digital inputs

Digital inputs are available on connectors X8, X9 and X10, as shown in section 4.1.1.
The digital inputs are arranged in three groups, each with their own common connection. This allows each group to be configured independently for 'active high' or 'active low' operation (using the Mint `INPUTMODE` keyword).

The general purpose digital inputs DIN0 - DIN19 can be shared between axes, and are programmable in Mint (using a range of keywords beginning with the letters `INPUT`...) to determine their active level and if they should be edge triggered. The state of individual inputs can be read directly using the `INX` and `INSTATEX` keywords. See the Mint help file.

A general purpose digital input can be assigned to a special purpose function such as a limit, stop or error input. See the keywords `LIMITFORWARDINPUT`, `LIMITREVERSEINPUT`, `STOPINPUT` and `ERRORINPUT` in the Mint help file.

4.3.1.1 Important note regarding home switch inputs

When the NextMove *e*100 (the manager node) is controlling an *e*100 or *e*150 drive over EPL (e.g. MotiFlex *e*100, a controlled node), the axis' home switch input must be wired to the drive, not the NextMove *e*100. This is because the NextMove *e*100 only *triggers* the homing sequence, which is then performed entirely by the drive. It is therefore the drive which must receive the home switch input signal, otherwise it will not be able to complete its homing routine. Similarly, it is the drive's own `HOME`... keyword parameters that define the homing sequence.

4.3.1.2 Using a digital output to enable a remote drive

A digital output should not be wired directly to a digital input of a remote EPL drive to provide drive enable control. Synchronisation of the digital output and EPL software enable command cannot be guaranteed. It is recommended to use an emergency stop (E-stop) switch with instantaneous and time delay contacts. The instantaneous contacts are wired to a digital input on the NextMove *e*100. The time delay contacts are wired to the remote drive's enable input. When the E-stop switch is triggered, the instantaneous contacts break, allowing the NextMove *e*100 to issue a software disable to stop the drive in a controlled manner. The time delayed contacts then break and disable the drive completely.

Local drives (those that do not use EPL) are not affected, so can obtain a drive enable signal from a digital output on the NextMove *e*100.

4.3.1.3 DIN0 - DIN3

Digital inputs DIN0 to DIN3 can be assigned as fast interrupts. These are used as high speed position latches, allowing any combination of axes to be captured by the hardware. The latency between input triggering and capture is 1 µs. Special Mint keywords (beginning with the letters `LATCH`...) allow specific functions to be performed as a result of fast position inputs becoming active. See the Mint help file for details.

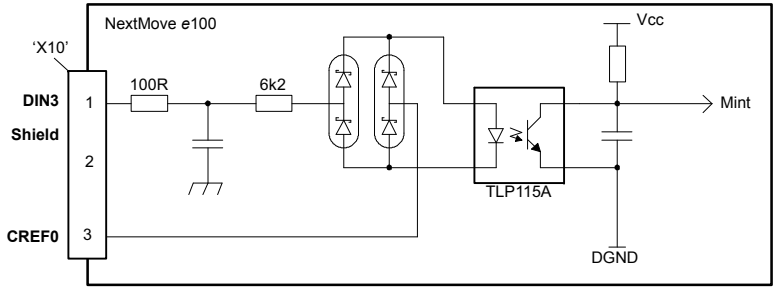

Figure 8: Fast interrupt digital input - DIN3 shown

Digital inputs DIN0 to DIN3 use CREF0 as their common connection.

Note: The fast inputs are particularly sensitive to noise, so inputs must use shielded twisted pair cable. Do not connect mechanical switches, relay contacts or other sources liable to signal 'bounce' directly to the fast inputs. This could cause unwanted multiple triggering.

4.3.1.4 DIN4 - DIN11

Digital inputs DIN4 to DIN11 have a common specification:

- Opto-isolated digital inputs.
- Sampling frequency: 1 kHz.

Digital inputs DIN4 to DIN11 use CREF1 as their common connection.

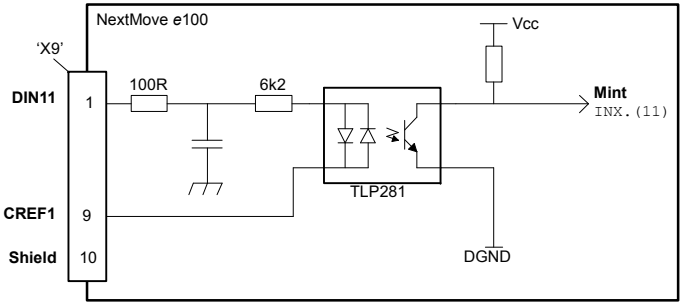

Figure 9: General purpose digital input - DIN11 shown

If an input is configured as edge triggered, the triggering pulse must have a duration of at least 1 ms (one software scan) to guarantee acceptance by Mint. The use of shielded cable for inputs is recommended.

4.3.1.5 DIN12 - DIN19

Digital inputs DIN12 to DIN19 have the same electrical specification as DIN4-11, except that they use CREF2 as their common connection.

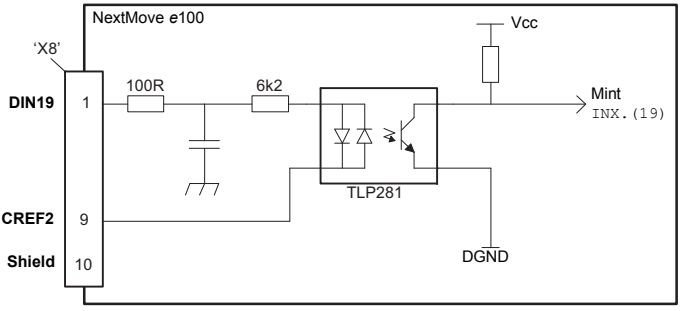

Figure 10: General purpose digital input - DIN19 shown

4.3.1.6 Typical digital input wiring

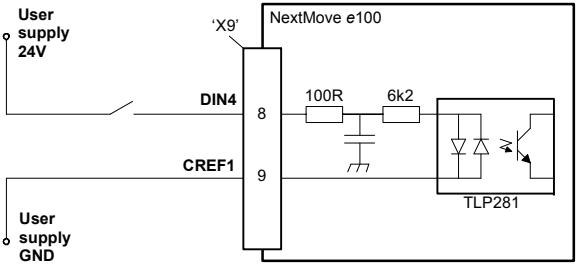

Figure 11: Digital input - typical 'active high' input connection using a switch

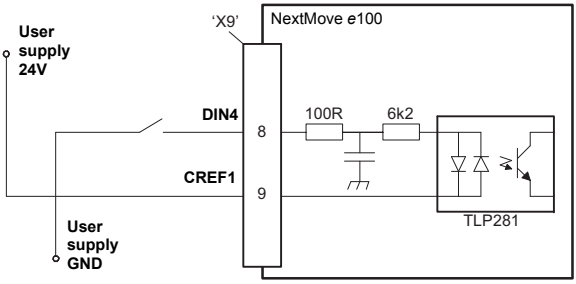

Figure 12: Digital input - typical 'active low' input connection using a switch

Note: The circuits shown in Figures 11 and 12 are not suitable for use with fast inputs DIN0 to DIN3. Using a mechanical switch, relay contacts or other source liable to signal 'bounce' could cause unwanted multiple triggering.

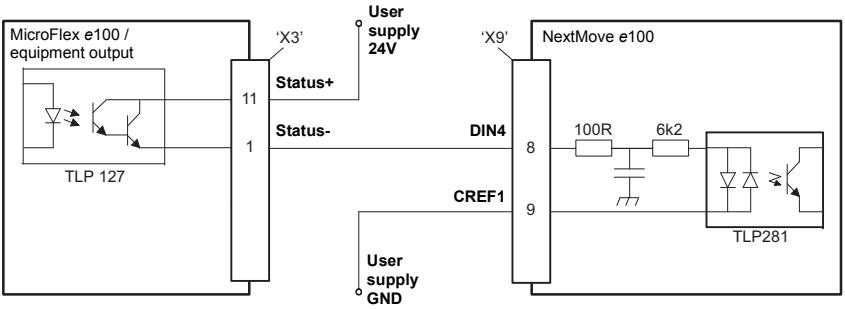

Figure 13: Digital input - typical connections from an ABB MicroFlex e100

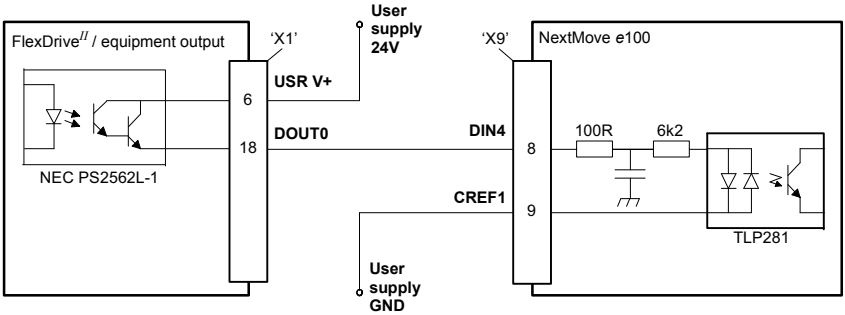

Figure 14: Digital input - typical connections from a Baldor FlexDrive^{II}, Flex+Drive^{II} or MintDrive^{II}

4.3.2 Digital outputs and relay

The digital outputs are available on connectors X4 and X11, as shown in section 4.1.1.
A digital output can be configured in Mint as a general purpose output or a global error output. Using a digital output to enable a remote drive is not recommended; see section 4.3.1.2 on page 4-7. Outputs can be controlled directly from Mint WorkBench, or by the Mint `OUT` and `OUTX` keywords. Outputs can be shared between axes and can be configured using Mint WorkBench (or the `OUTPUTACTIVELEVEL` keyword) to determine their active level.

4.3.2.1 DOUT0 - DOUT7

An external supply (typically 24 V DC) is used to power the UDN2982 output devices, as shown in Figure 15. When an output is activated, current is sourced from the user supply through a UDN2982 output driver.

- A total of 500 mA may be sourced by DOUT0 - DOUT7, providing an average 62.5 mA per output when all outputs are on (100% duty cycle, 24 V supply). If the total current exceeds 1 A a self-resetting fuse will operate, which may take a few minutes to reset.
- An individual output can provide a maximum continuous current of 350 mA, <u>but if other outputs are being used the total current must not exceed 500 mA</u>.
- The maximum allowable power dissipation for the UDN2982 driver is 1.5 W.

If an output is used to drive an inductive load such as a relay, a suitably rated diode must be fitted across the relay coil, observing the correct polarity. The use of shielded cable is recommended.

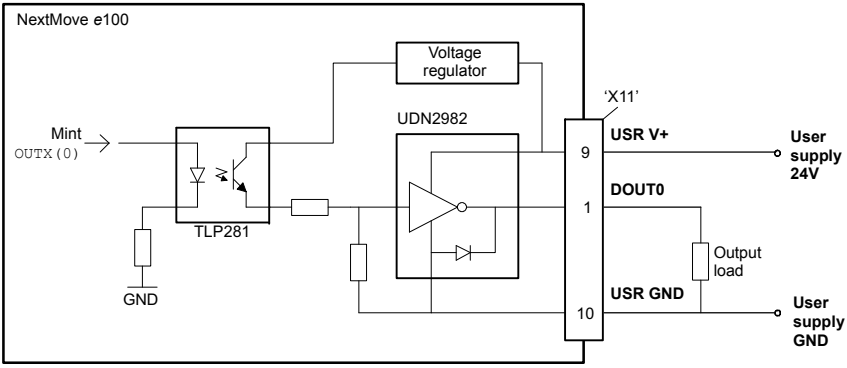

Figure 15: Digital outputs (DOUT0-7) - DOUT0 shown

4.3.2.2 DOUT8 - DOUT11

DOUT8 - DOUT11 use the same type of output circuitry as DOUT0 - DOUT7, with their own UDN2982 output driver. Because only four of the UDN2982's eight outputs are being used, the average current available on DOUT8 - DOUT11 is increased:

- A total of 500 mA may be sourced by DOUT8 - DOUT11, providing an average 125 mA per output when all outputs are on (100% duty cycle, 24 V supply). If the total current exceeds 1 A a self-resetting fuse will operate, which may take a few minutes to reset.
- An individual output can provide a maximum continuous current of 350 mA, <u>but if other outputs are being used the total current must not exceed 500 mA</u>.
- The maximum allowable power dissipation for the UDN2982 driver is 1.5 W.

4.3.2.3 DOUT12 (relay) connections

The relay connections are available on connector X12, as shown in section 4.1.1. The relay outputs are isolated from any internal circuits in the NextMove *e*100. In normal operation, while there is no error, the relay is energized and REL COM is connected to REL NO. In the event of an error or power loss, the relay is de-energized, and REL COM is connected to REL NC. For control purposes the relay is considered to be another digital output (DOUT12), and can be controlled directly using the Mint `OUT` or `OUTX` keywords. The relay can be configured as the global error output by setting `GLOBALERROROUTPUT` to 12. See the Mint help file.

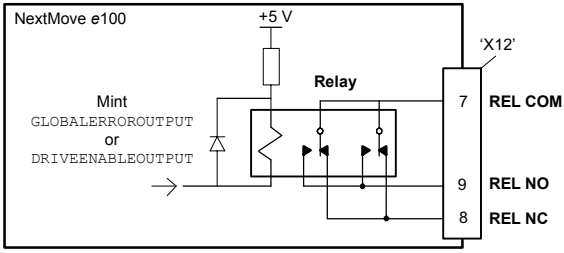

Figure 16: Relay connections

4.3.3 Stepper control outputs - models NXE100-16xxDx

The stepper control outputs are available on connectors X2 and X3, as shown in section 4.1.1.

There are four sets of stepper motor control outputs, operating in the range 60 Hz to 5 MHz. Each of the step (pulse) and direction signals from the NextMove *e*100 is driven by DS26LS31 line drivers, providing RS422 differential outputs. It is recommended to use separate shielded cables for the step outputs. The shield should be connected at one end only.

The `STEPPERDELAY` keyword allows a 0 - 4.25 µs delay to be introduced between state changes of the step and direction outputs. The `FREQ` keyword can be used to directly control the output frequency, between 60 Hz and 5 MHz. Values less than 60 Hz will produce no output - see the Mint help file.

NOTICE

The DS26LS31 drivers are static sensitive devices. Take appropriate ESD precautions when handling the NextMove *e*100. When connecting the outputs to single ended inputs as shown in Figures 17 and 18, do not connect the STEP*x*- or DIR*x*- outputs to ground; leave them unconnected.

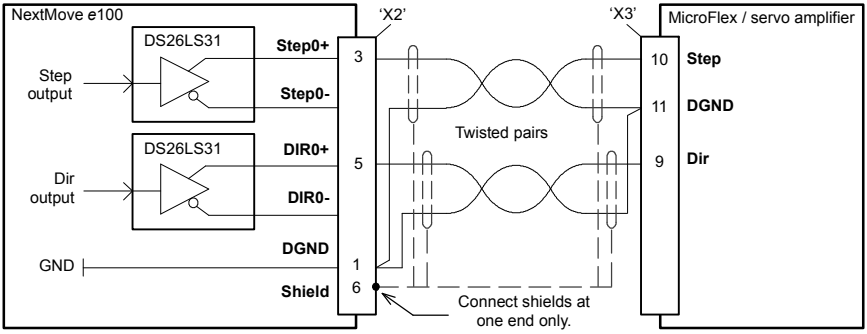

Figure 17: Stepper output - typical connection to an ABB MicroFlex

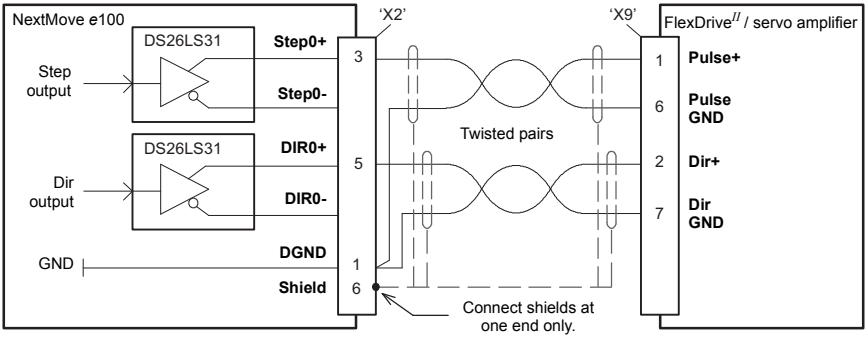

Figure 18: Stepper output - typical connection to a Baldor FlexDrive^{II}, Flex+Drive^{II} or MintDrive^{II}

4.3.4 Stepper control outputs - models NXE100-16xxSx

The stepper control outputs are available on connectors X2 and X3, as shown in section 4.1.1. There are four sets of stepper motor control outputs, operating in the range 60 Hz to 500 kHz. Each of the step (pulse) and direction signals from the NextMove *e*100 is driven by a ULN2803 open collector Darlington output device. The `STEPPERDELAY` keyword allows a 0 - 4.25 µs delay to be introduced between state changes of the step and direction outputs. The `FREQ` keyword can be used to directly control the output frequency, between 60 Hz and 500 kHz. Values less than 60 Hz will produce no output - see the Mint help file.

NOTICE

The ULN2003 drivers are static sensitive devices. Take appropriate ESD precautions when handling the NextMove *e*100. A 5 V supply is provided on connectors X2 and X3 for powering external circuits, as shown in Figure 19. The same 5 V supply is also present on connectors X5, X6 and X7 for powering encoders. Ensure that the total combined current demand of all 5 V outputs does not exceed 600 mA. It is usually necessary to connect a 470 Ω pull-up resistor between the output and the 5 V supply (pin 4), especially where induced noise is affecting a step or direction output.

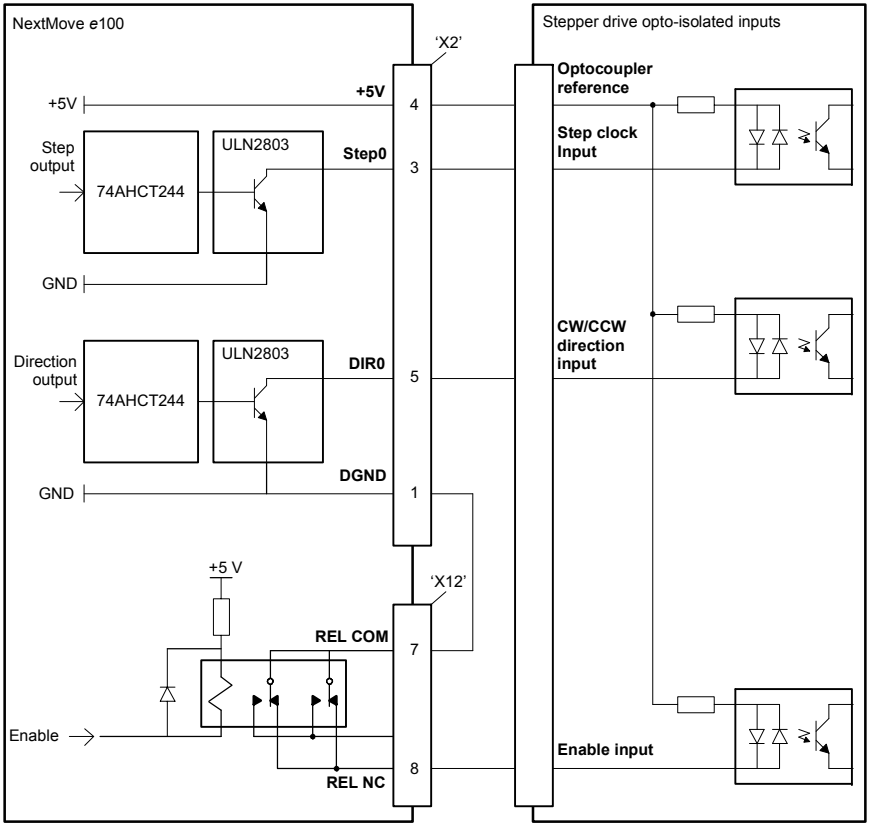

Figure 19: Connections to a typical stepper drive (e.g. ABB DSM series)

4.4 Other I/O

4.4.1 Encoder inputs 0-2

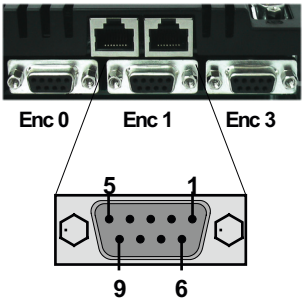

Location	X5, X6, X7 Mating connectors: 9-pin male D-type	
Pin	**Name**	**Description**
1	CHA+	Channel A signal
2	CHB+	Channel B signal
3	CHZ+	Index channel signal
4	Shield	Shield connection
5	DGND	Digital ground
6	CHA-	Channel A signal complement
7	CHB-	Channel B signal complement
8	CHZ-	Index channel signal complement
9	+5V out	Power supply to encoder

Three incremental encoders may be connected to NextMove *e*100, each with complementary A, B and Z channel inputs. Each input channel uses a MAX3095 differential line receiver with pull up resistors and terminators. Encoders must provide RS422 differential signals. The use of individually shielded twisted pair cable is recommended. A 5 V supply is provided on connectors X5, X6 and X7 for powering the encoders. On models NXE100-16*xx*S*x*, the same 5 V supply is also present on connectors X2 and X3 for powering external circuits (see section 4.3.4). Ensure that the total combined current demand of all 5 V outputs does not exceed 600 mA. If the total current exceeds 1 A a self-resetting fuse will operate, which may take a few minutes to reset.

4.4.1.1 Encoder input frequency

The maximum encoder input frequency is affected by the length of the encoder cables.
The theoretical maximum frequency is 20 million quadrature counts per second. This is equivalent to a maximum frequency for the A and B signals of 5 MHz. However, the effect of cable length is shown in Table 1:

A and B signal frequency	Maximum cable length	
	meters	**feet**
1.3 MHz	2	6.56
500 kHz	10	32.8
250 kHz	20	65.6
100 kHz	50	164.0
50 kHz	100	328.1
20 kHz	300	984.2
10 kHz	700	2296.6
7 kHz	1000	3280.8

Table 1: Effect of cable length on maximum encoder frequency

The maximum recommended cable length is 30.5 m (100 ft).

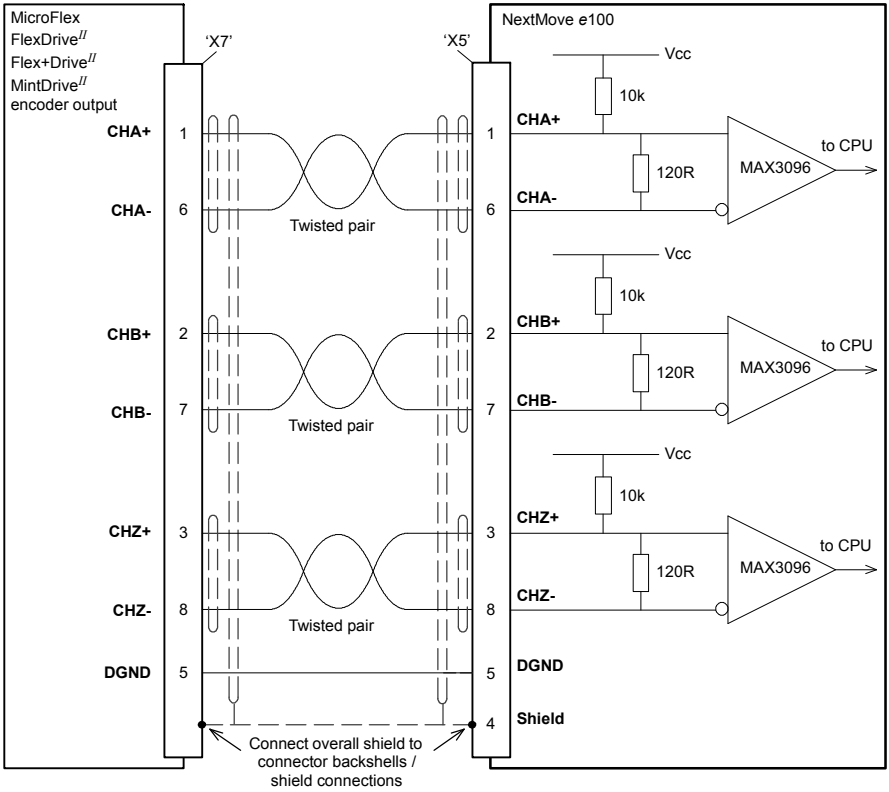

Figure 20: Encoder input 0 - typical connection from a servo amplifier (e.g. ABB MicroFlex, FlexDrive^{II}, Flex+Drive^{II} or MintDrive^{II})

4.4.2 Node ID selector switches

The NextMove *e*100 has two selector switches which determine the unit's node ID on EPL networks. Each switch has 16 positions, allowing selection of the hexadecimal values 0 - F. In combination, the two switches allow values of 0 - 255 (hexadecimal FF) to be selected. The switch labeled 'HI' sets the high nibble (half byte), and the switch labeled 'LO' sets the low nibble. The following table lists all node IDs from 0 to 255 with the equivalent HI and LO switch settings:

Node ID	HI	LO	Node ID	HI	LO	Node ID	HI	LO	Node ID	HI	LO
0	0	0	**64**	4	0	**128**	8	0	**192**	C	0
1	0	1	**65**	4	1	**129**	8	1	**193**	C	1
2	0	2	**66**	4	2	**130**	8	2	**194**	C	2
3	0	3	**67**	4	3	**131**	8	3	**195**	C	3
4	0	4	**68**	4	4	**132**	8	4	**196**	C	4
5	0	5	**69**	4	5	**133**	8	5	**197**	C	5
6	0	6	**70**	4	6	**134**	8	6	**198**	C	6
7	0	7	**71**	4	7	**135**	8	7	**199**	C	7
8	0	8	**72**	4	8	**136**	8	8	**200**	C	8
9	0	9	**73**	4	9	**137**	8	9	**201**	C	9
10	0	A	**74**	4	A	**138**	8	A	**202**	C	A
11	0	B	**75**	4	B	**139**	8	B	**203**	C	B
12	0	C	**76**	4	C	**140**	8	C	**204**	C	C
13	0	D	**77**	4	D	**141**	8	D	**205**	C	D
14	0	E	**78**	4	E	**142**	8	E	**206**	C	E
15	0	F	**79**	4	F	**143**	8	F	**207**	C	F
16	1	0	**80**	5	0	**144**	9	0	**208**	D	0
17	1	1	**81**	5	1	**145**	9	1	**209**	D	1
18	1	2	**82**	5	2	**146**	9	2	**210**	D	2
19	1	3	**83**	5	3	**147**	9	3	**211**	D	3
20	1	4	**84**	5	4	**148**	9	4	**212**	D	4
21	1	5	**85**	5	5	**149**	9	5	**213**	D	5
22	1	6	**86**	5	6	**150**	9	6	**214**	D	6
23	1	7	**87**	5	7	**151**	9	7	**215**	D	7
24	1	8	**88**	5	8	**152**	9	8	**216**	D	8
25	1	9	**89**	5	9	**153**	9	9	**217**	D	9
26	1	A	**90**	5	A	**154**	9	A	**218**	D	A
27	1	B	**91**	5	B	**155**	9	B	**219**	D	B
28	1	C	**92**	5	C	**156**	9	C	**220**	D	C
29	1	D	**93**	5	D	**157**	9	D	**221**	D	D
30	1	E	**94**	5	E	**158**	9	E	**222**	D	E
31	1	F	**95**	5	F	**159**	9	F	**223**	D	F

Node ID	HI	LO	Node ID	HI	LO	Node ID	HI	LO	Node ID	HI	LO
32	2	0	**96**	6	0	**160**	A	0	**224**	E	0
33	2	1	**97**	6	1	**161**	A	1	**225**	E	1
34	2	2	**98**	6	2	**162**	A	2	**226**	E	2
35	2	3	**99**	6	3	**163**	A	3	**227**	E	3
36	2	4	**100**	6	4	**164**	A	4	**228**	E	4
37	2	5	**101**	6	5	**165**	A	5	**229**	E	5
38	2	6	**102**	6	6	**166**	A	6	**230**	E	6
39	2	7	**103**	6	7	**167**	A	7	**231**	E	7
40	2	8	**104**	6	8	**168**	A	8	**232**	E	8
41	2	9	**105**	6	9	**169**	A	9	**233**	E	9
42	2	A	**106**	6	A	**170**	A	A	**234**	E	A
43	2	B	**107**	6	B	**171**	A	B	**235**	E	B
44	2	C	**108**	6	C	**172**	A	C	**236**	E	C
45	2	D	**109**	6	D	**173**	A	D	**237**	E	D
46	2	E	**110**	6	E	**174**	A	E	**238**	E	E
47	2	F	**111**	6	F	**175**	A	F	**239**	E	F
48	3	0	**112**	7	0	**176**	B	0	**240**	F	0
49	3	1	**113**	7	1	**177**	B	1	**241**	F	1
50	3	2	**114**	7	2	**178**	B	2	**242**	F	2
51	3	3	**115**	7	3	**179**	B	3	**243**	F	3
52	3	4	**116**	7	4	**180**	B	4	**244**	F	4
53	3	5	**117**	7	5	**181**	B	5	**245**	F	5
54	3	6	**118**	7	6	**182**	B	6	**246**	F	6
55	3	7	**119**	7	7	**183**	B	7	**247**	F	7
56	3	8	**120**	7	8	**184**	B	8	**248**	F	8
57	3	9	**121**	7	9	**185**	B	9	**249**	F	9
58	3	A	**122**	7	A	**186**	B	A	**250**	F	A
59	3	B	**123**	7	B	**187**	B	B	**251**	F	B
60	3	C	**124**	7	C	**188**	B	C	**252**	F	C
61	3	D	**125**	7	D	**189**	B	D	**253**	F	D
62	3	E	**126**	7	E	**190**	B	E	**254**	F	E
63	3	F	**127**	7	F	**191**	B	F	**255**	F	F

Figure 21: Decimal node IDs and equivalent HI / LO hexadecimal switch settings

Note: If the node ID selector switches are set to FF, the node's firmware will not run on power up. However, Mint WorkBench will still be able to detect the NextMove *e*100 and download new firmware.

In many networking environments, the node ID may also be referred to as the *address*. On EPL networks, limitations apply to the node IDs that may be selected:

- Node ID 0 (00) is reserved for special purposes and cannot be used.
- Node IDs 1 - 239 (01 - EF) cause the node to become a ‘controlled node’, a node that will accept commands from the manager node.
- Node ID 240 (F0) causes the node to become the ‘manager node’, a node that will control the timing and issue commands to controlled nodes. There must only be one manager node on the network.
- Node IDs 241 - 255 (F1 - FF) are reserved for special purposes and cannot be used.

For all other communication channels such as CANopen, USB and serial, the node ID is set in software. Each channel can have a different node ID, selected using the Mint WorkBench Connectivity Wizard or the Mint `BUSNODE` keyword. See the Mint help file for details.

4.5 USB and serial communication

4.5.1 USB port

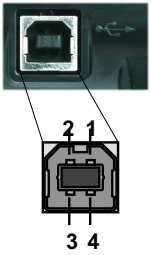

Location	USB Mating connector: USB Type B (downstream) plug	
Pin	**Name**	**Description**
1	VBUS	USB +5 V
2	D-	Data-
3	D+	Data+
4	GND	Ground

The USB connector is used to connect the NextMove *e*100 to a PC running Mint WorkBench. The NextMove *e*100 is a self-powered, USB 1.1 (12 Mbps) compatible device. If it is connected to a slower USB 1.0 host PC or hub, communication speed will be limited to the USB 1.0 specification (1.5 Mbps). If it is connected to a faster USB 2.0 (480 Mbps) or USB 3.0 (5 Gbps) host PC or hub, communication speed will remain at the USB 1.1 specification of the NextMove *e*100.

Ideally, the NextMove *e*100 should be connected directly to a USB port on the host PC. If it is connected to a hub shared by other USB devices, communication could be affected by the activity of the other devices. The maximum recommended cable length is 5 m (16.4 ft).

4.5.2 Serial port

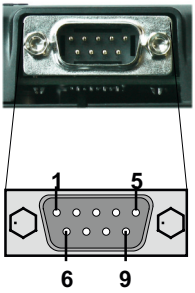

Location	Serial Mating connector: 9-pin female D-type	
Pin	**RS232 name**	**RS485 / RS422 name**
1	Shield	*(NC)*
2	RXD	RXB (input)
3	TXD	TXB (output)
4	*(NC)*	*(NC)*
5	DGND	0 V DGND
6	*(NC)*	*(NC)*
7	RTS	TXA (output)
8	CTS	RXA (input)
9	DGND	*(NC)*

NextMove *e*100 provides a selectable RS232 or RS485/422 serial port for programming, connection to an HMI operator panel, or for communication with other devices such as PLCs or other servo drives. The port is fully ESD protected to IEC 1000-4-2 (15 kV). When the NextMove *e*100 is connected to Mint WorkBench, the Connectivity Wizard can be used to configure the serial port. The configuration can also be changed using the Mint keyword `SERIALBAUD` (see the Mint help file for details). The value is restored at power up. The port is capable of operation at up to 115.2 Kbaud.

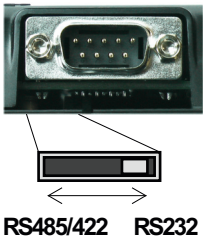

4.5.3 Using RS232

The NextMove *e*100 has a full-duplex RS232 serial port with the following preset configuration:

- 57.6 Kbaud
- 1 start bit
- 8 data bits
- 1 stop bit
- No parity
- Hardware handshaking lines RTS and CTS must be connected.

The RS232 port is configured as a DCE (Data Communications Equipment) unit so it is possible to operate the controller with any DCE or DTE (Data Terminal Equipment). Full duplex transmission with hardware handshaking is supported. Only the TXD, RXD and 0V GND connections are required for communication, but since many devices will check the RTS and CTS lines, these must also be connected. Pins 4 and 6 are linked on the NextMove *e*100. The maximum recommended cable length is 3 m (10 ft) at 57.6 Kbaud (the factory preset rate). When using lower baud rates, longer cable lengths may be used up to maximum of 15 m (49 ft) at 9600 baud.

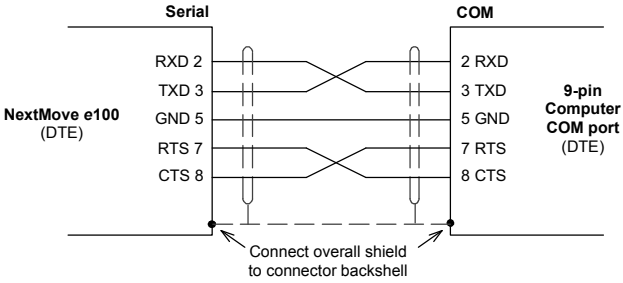

Figure 22: RS232 serial port connections

4.5.4 Multidrop using RS485 / RS422

Multidrop systems allow one device to act as a 'network master', controlling and interacting with the other (slave) devices on the network. The network master can be a controller such as NextMove *e*100, a host application such as Mint WorkBench (or other custom application), or a programmable logic controller (PLC). RS422 may be used for multi-drop applications as shown in Figure 23. Four-wire RS485 may be used for single point-to-point applications involving only one controller. If firmware is updated over RS485/RS422, it can only be downloaded to the controller that was chosen in the Select Controller dialog in Mint WorkBench.

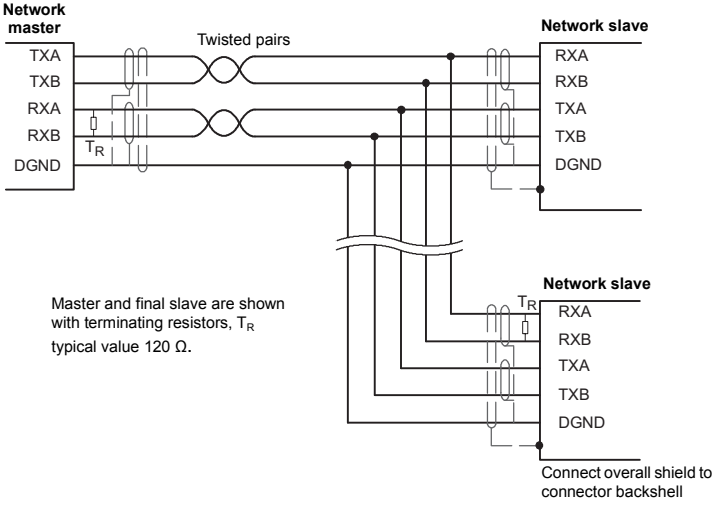

Figure 23: 4-wire RS422 multi-drop connections

Each transmit/receive (TX/RX) network requires a termination resistor at the final RX connection, but intermediate devices must not be fitted with termination resistors. An exception is where repeaters are being used which may correctly contain termination resistors. Termination resistors are used to match the impedance of the load to the impedance of the transmission line (cable) being used. Unmatched impedance causes the

transmitted signal to not be fully absorbed by the load. This causes a portion of the signal to be reflected back into the transmission line as noise. If the source impedance, transmission line impedance, and load impedance are all equal, the reflections (noise) are eliminated. Termination resistors increase the load current and sometimes change the bias requirements and increase the complexity of the system.

4.5.5 Connecting serial Baldor HMI Operator Panels

Serial Baldor HMI Operator Panels use a 15-pin male D-type connector (marked PLC PORT), but the NextMove *e*100 Serial connector uses a 9-pin male D-type connector. The NextMove *e*100 may be connected as shown in Figure 24:

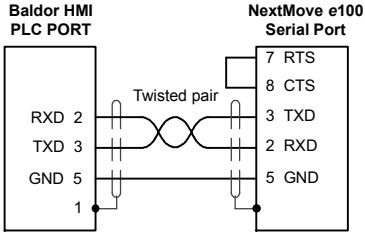

Figure 24: RS232 cable wiring

Alternatively, the Baldor HMI panel may be connected using RS485/422, as shown in Figure 25:

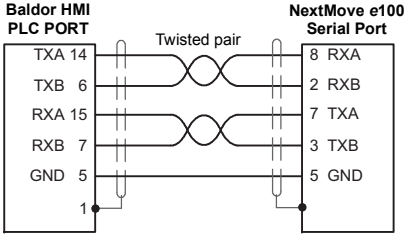

Figure 25: RS485/422 cable wiring

4.6 Ethernet interface

The Ethernet interface provides TCP/IP and Ethernet POWERLINK networking capabilities.

4.6.1 TCP/IP

Transmission Control Protocol / Internet Protocol (TCP/IP) is a common set of protocols used to transfer information between devices over a network, including the internet. TCP enables two devices to establish a connection, and guarantees the delivery of packets (datagrams) of information in the correct order. IP specifies the format of the individual packets (which includes the destination address of the receiving device) but has no influence on whether the packet is delivered correctly.

TCP/IP allows the NextMove *e*100 to support standard Ethernet communication with a host PC running Mint WorkBench. The connection uses a high level ICM (Immediate Command Mode) protocol to allow Mint commands, Mint programs and even firmware to be sent to the controller over the Ethernet network.

When operating in standard Ethernet mode, TCP/IP cannot be used to communicate with a controller on a daisy-chained network. This is due to cumulative timing errors caused by each controller.s internal hub. It is necessary to connect the host PC to the controller either directly or via a switch or hub, as shown in Figure 26. A switch is preferable to a hub as it will provide faster performance when there is a large amount of data being transmitted.

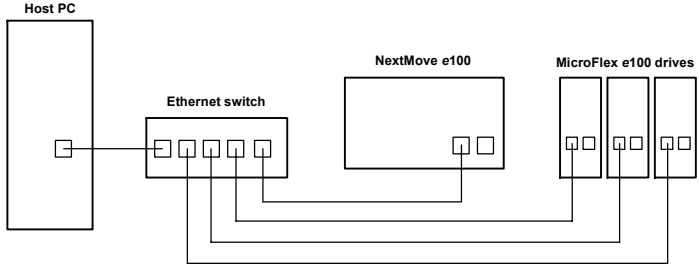

Figure 26: Connecting to controllers using TCP/IP in standard Ethernet mode

When operating in EPL mode, in conjunction with an EPL compatible router, the host PC *can* use TCP/IP to communicate with controllers on a daisy-chained network. In this situation, the router will use TCP/IP only within EPL's asynchronous time slots. See the Mint help file for further details.

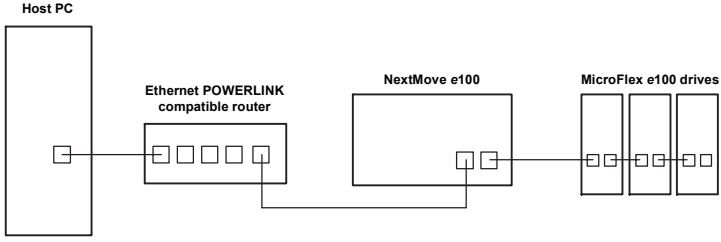

Figure 27: Connecting to daisy-chained controllers using TCP/IP and EPL mode

4.6.2 Ethernet POWERLINK

NextMove *e*100 supports the deterministic Ethernet POWERLINK (EPL) protocol. This protocol provides very precise and predictable 'real-time' communication over a 100 Mbit/s (100Base-T) Fast Ethernet (IEEE 802.3u) connection. This makes it suitable for the transmission of control and feedback signals between the NextMove *e*100 and other EPL enabled controllers such as MicroFlex *e*100. The EPL protocol implemented in Mint is based on the CANopen DS402 Device Profile for Drives and Motion Control. The structure of the physical network is informal so does not need to reflect the logical relationship between nodes.

NextMove *e*100 incorporates a built-in repeating hub, providing two ports for connection to other equipment. This allows nodes to be connected as a 'daisy-chain' network. Each node introduces a delay of approximately 500 ns, so in time-critical applications this could limit the number of nodes in a chain. Propagation delays due to cabling should also be considered. Hubs may be used if necessary, but Ethernet switches must not be used in EPL networks as their timing cannot be guaranteed.

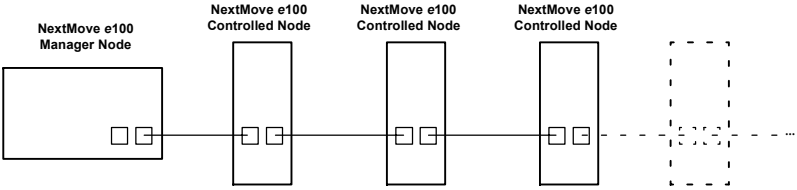

Figure 28: Simple daisy-chained EPL network

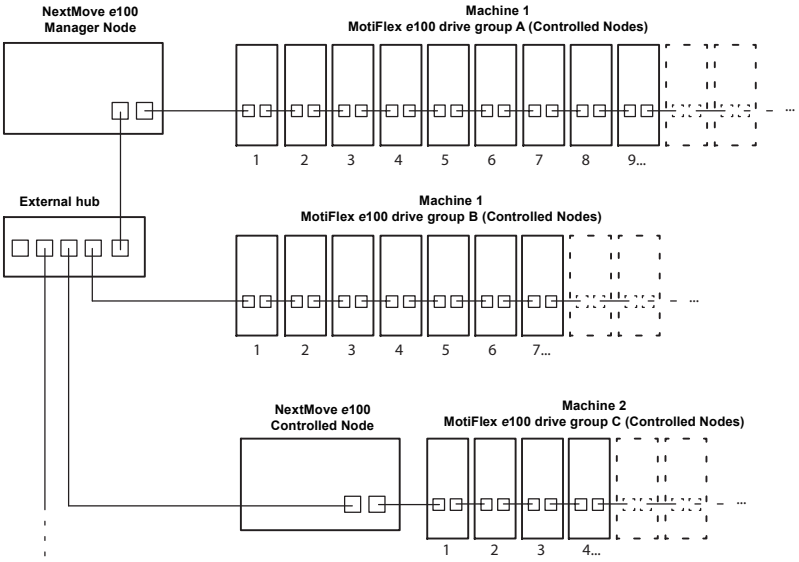

Figure 29: Example multi-branch EPL network

4.6.3 Ethernet connectors

Ethernet connections are made using the identical RJ45 Ethernet receptacles.

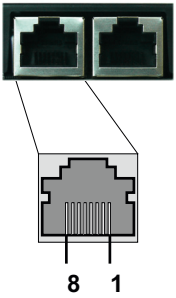

Location	E1 & E2	
Pin	**Name**	**Description**
1	TX+	Transmit+
2	TX-	Transmit-
3	RX+	Receive+
4	-	(NC)
5	-	(NC)
6	RX-	Receive-
7	-	(NC)
8	-	(NC)

To connect the NextMove *e*100 to other EPL devices use CAT5e Ethernet cables - either S/UTP (unshielded screened/foiled twisted pairs) or preferably S/FTP (fully shielded screened/foiled twisted pairs). To ensure CE compliance, Ethernet cables longer than 3 m should be S/FTP cables bonded to the metal backplane at both endes using conductive clamps (see section C.1.5). Cables may be up to 100 m (328 ft) long. Two varieties of CAT5e cable are available; ‘straight’ or ‘crossed’. Straight cables have the TX pins of the connector at one end of the cable wired to the TX pins of the RJ45 connector at the other end of the cable. Crossover cables have the TX pins of the connector at one end of the cable wired to the RX pins of the RJ45 connector at the other end of the cable.

Provided the network consists of only ABB EPL controllers and drives (and any hub), straight or crossed cables may be used. This is because many Ethernet devices, including hubs and all ABB EPL products, incorporate Auto-MDIX switching technology which automatically compensates for the wiring of the straight cable. However, if other manufacturer’s EPL nodes are included in the EPL network, crossover cables should be used as recommended by the Ethernet POWERLINK Standardization Group (EPSG).

The NextMove *e*100 Ethernet interface is galvanically isolated from the rest of the NextMove *e*100 circuitry by magnetic isolation modules incorporated in each of the Ethernet connectors. This provides protection up to 1.5 kV. The connector/cable screen is connected directly to the chassis earth of the NextMove *e*100. For additional noise immunity, especially where Ethernet cables are frequently unplugged, it is recommended to clamp the outer shields of Ethernet cables to an earth point. Termination components are incorporated in each of the Ethernet connectors, so no further termination is required.

The EPL network supports the 100Base-TX (100 Mbit/s) system only, so attempting to connect slower 10Base-T (10 Mbit/s) nodes will cause a network error.

4.7 CAN interface

The CAN bus is a serial based network originally developed for automotive applications, but now used for a wide range of industrial applications. It offers low-cost serial communications with very high reliability in an industrial environment; the probability of an undetected error is 4.7×10^{-11}. It is optimized for the transmission of small data packets and therefore offers fast update of I/O devices (peripheral devices) connected to the bus.

The CAN protocol only defines the physical attributes of the network, i.e. the electrical, mechanical, functional and procedural parameters of the physical connection between devices. The higher level network functionality on NextMove *e*100 is defined by the CANopen protocol, one of the most used standards for machine control.

4.7.1 CAN connector

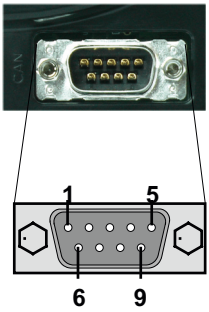

Location	CAN Mating connector: 9-pin female D-type	
Pin	**Name**	**Description**
1	-	(NC)
2	CAN-	CAN channel negative
3	CAN GND	Ground/earth reference for CAN signals
4	-	(NC)
5	Shield	Shield connection
6	CAN GND	Ground/earth reference for CAN signals
7	CAN+	CAN channel positive
8	-	(NC)
9	CAN V+	CAN power V+ (12-24 V)

4.7.2 CAN wiring

A very low error bit rate over CAN can only be achieved with a suitable wiring scheme, so the following points should be observed:

- The two-wire data bus line may be routed parallel, twisted and/or shielded, depending on EMC requirements. ABB recommends a twisted pair cable with the shield/screen connected to the connector backshell, in order to reduce RF emissions and provide immunity to conducted interference.
- The bus must be terminated at both ends only (not at intermediate points) with resistors of a nominal value of 120 Ω. This is to reduce reflections of the electrical signals on the bus, which helps a node to interpret the bus voltage levels correctly. If the NextMove *e*100 is at the end of the network then ensure that a 120 Ω terminating resistor is fitted (normally inside the D-type connector).

- All cables and connectors should have a nominal impedance of 120 Ω. Cables should have a length related resistance of 70 mΩ/m and a nominal line delay of 5 ns/m.
- The maximum bus length depends on the bit-timing configuration (baud rate). The table opposite shows the approximate maximum bus length (worst-case), assuming 5 ns/m propagation delay and a total effective device internal in-out delay of 210 ns at 1 Mbit/s, 300 ns at 500 - 250 Kbit/s, 450 ns at 125 Kbit/s and 1.5 ms at 50 - 10 Kbit/s.

  (1)For bus lengths greater than about 1000 m, bridge or repeater devices may be needed.

CAN Baud Rate	Maximum Bus Length
1 Mbit/s	25 m
500 Kbit/s	100 m
250 Kbit/s	250 m
125 Kbit/s	500 m
100 Kbit/s	600 m
50 Kbit/s	1000 m
20 Kbit/s	2500 m(1)
10 Kbit/s	5000 m(1)

- The compromise between bus length and CAN baud rate must be determined for each application. The CAN baud rate can be set using the `BUSBAUD` keyword. It is essential that all nodes on the network are configured to run at the same baud rate.
- The wiring topology of a CAN network should be as close as possible to a single line/bus structure. However, stub lines are allowed provided they are kept to a minimum (<0.3 m at 1 Mbit/s).
- The 0 V connection of all of the nodes on the network must be tied together through the CAN cabling. This ensures that the CAN signal levels transmitted by NextMove *e*100 or CAN peripheral devices are within the common mode range of the receiver circuitry of other nodes on the network.

4.7.2.1 Opto-isolation

On the NextMove *e*100, the CAN channel is opto-isolated. A voltage in the range 12-24 V must be applied between pin 9 (+24 V) and pin 3 or 6 (0 V) of the CAN connector. From this supply, an internal voltage regulator provides the 5 V at 100 mA required for the isolated CAN circuit. A connector such as the Phoenix Contact SUBCON-PLUS F3 (Phoenix part 2761871) provides a 9-pin D-type female connector with easily accessible terminal block connections. CAN cables supplied by ABB are ‘category 5’ and have a maximum current rating of 1 A, so the maximum number of NextMove *e*100 units that may be used on one network is limited to ten.

4.7.3 CANopen

ABB has implemented a CANopen protocol in Mint (based on the ‘Communication Profile’ CiA DS-301) which supports both direct access to device parameters and time-critical process data communication. The NextMove *e*100 complies with CANopen slave device profile DS402, and can be a DS401 or DS403 master device. It is able to support and communicate with a variety of devices including:

- Any third party digital and analog I/O device that is compliant with the ‘Device Profile for Generic I/O Modules’ (CiA DS-401).
- Baldor HMI (Human Machine Interface) operator panels, which are based on the ‘Device Profile for Human Machine Interfaces’ (DS403).
- Other ABB controllers with CANopen support for peer-to-peer access using extensions to the CiA specifications (DS301 and DS302).

The functionality and characteristics of all ABB CANopen devices are defined in individual standardized (ASCII format) Electronic Data Sheets (EDS) which can be found on the Mint Motion Toolkit CD (OPT-SW-001), or downloaded from www.abbmotion.com.

Figure 30 shows a typical CANopen network with two NextMove *e*100 units and a Baldor HMI operator panel:

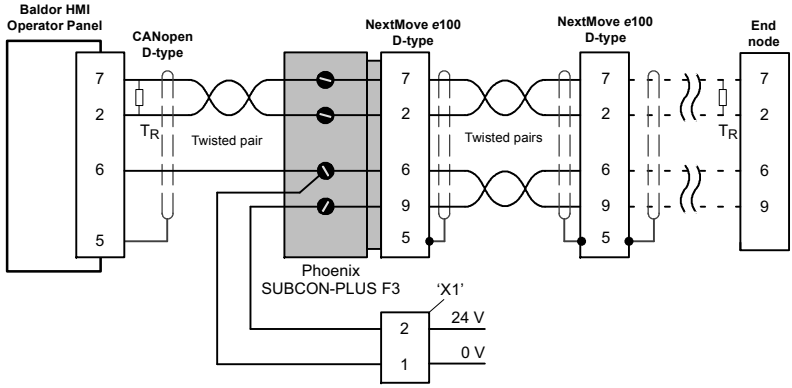

Figure 30: Typical CANopen network connections

Note: The NextMove *e*100 CAN channel is opto-isolated, so a voltage in the range 12-24 V must be applied between pin 9 and pin 6 of the CAN connector.

The configuration and management of a CANopen network must be carried out by a single node acting as the network master. This role can be performed by the NextMove *e*100 when it is configured to be the Network Manager node (node ID 1), or by a third party CANopen master device.

Up to 126 CANopen nodes (node IDs 2 to 127) can be added to the network by a NextMove *e*100 Manager node using the Mint `NODESCAN` keyword. If successful, the nodes can then be connected to using the Mint `CONNECT` keyword. Any network and node related events can then be monitored using the Mint `BUS1` event.

Note: All CAN related Mint keywords are referenced to CANopen using the 'bus' dot parameter. For CANopen the 'bus' dot parameter must be set to 1.

Please refer to the Mint help file for further details on CANopen, Mint keywords and dot parameters.

4.8 Connection summary - minimum wiring (local axis)

As a guide, Figure 31 shows an example of the typical minimum wiring required to allow the NextMove *e*100 and a single axis servo amplifier to work together. Details of the connector pins are shown in Table 2.

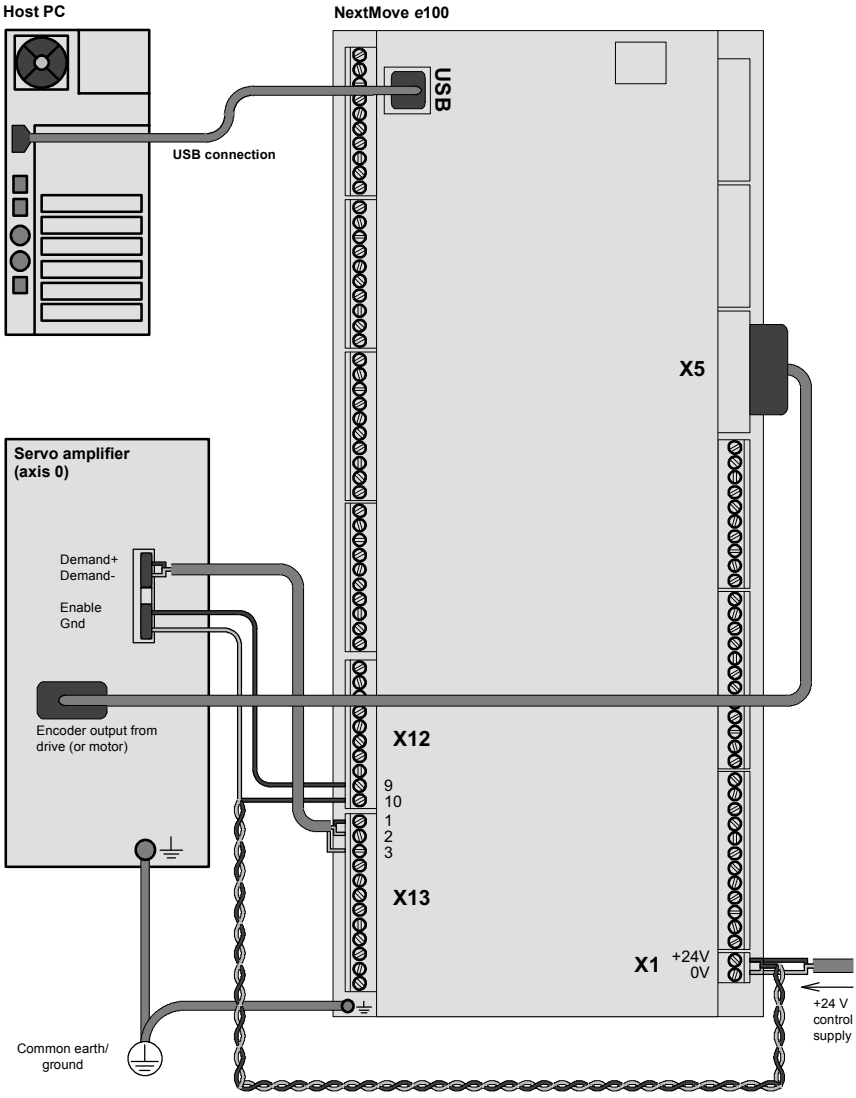

Figure 31: Example minimum system wiring

NextMove *e*100 connector	Pin	Name of signal	Function	Connection on amplifier (Note: connections may be labeled differently)
X1	1	0 V	Control supply ground	
	2	+24 V	Control supply +24 V input	
X5		Encoder0	Encoder0 feedback input	Encoder output
X12	9	REL NO	Normally open relay contact (closed to enable drive)	Enable +24 V
	10	REL COM	Common relay connection	Enable GND
X13	1	Demand0	Demand output 0	Demand+
	2	AGND	Analog GND	Demand-
	3	Shield	Shield connection	*(Do not connect)*

Table 2: Connector details for minimum system wiring shown in Figure 31

4.9 Connection summary - minimum wiring (remote axis)

As a guide, Figure 32 shows an example of the typical minimum wiring required to allow the NextMove *e*100 and a single axis EPL servo amplifier (e.g. MicroFlex *e*100) to work together. Details of the connector pins are shown in Table 3.

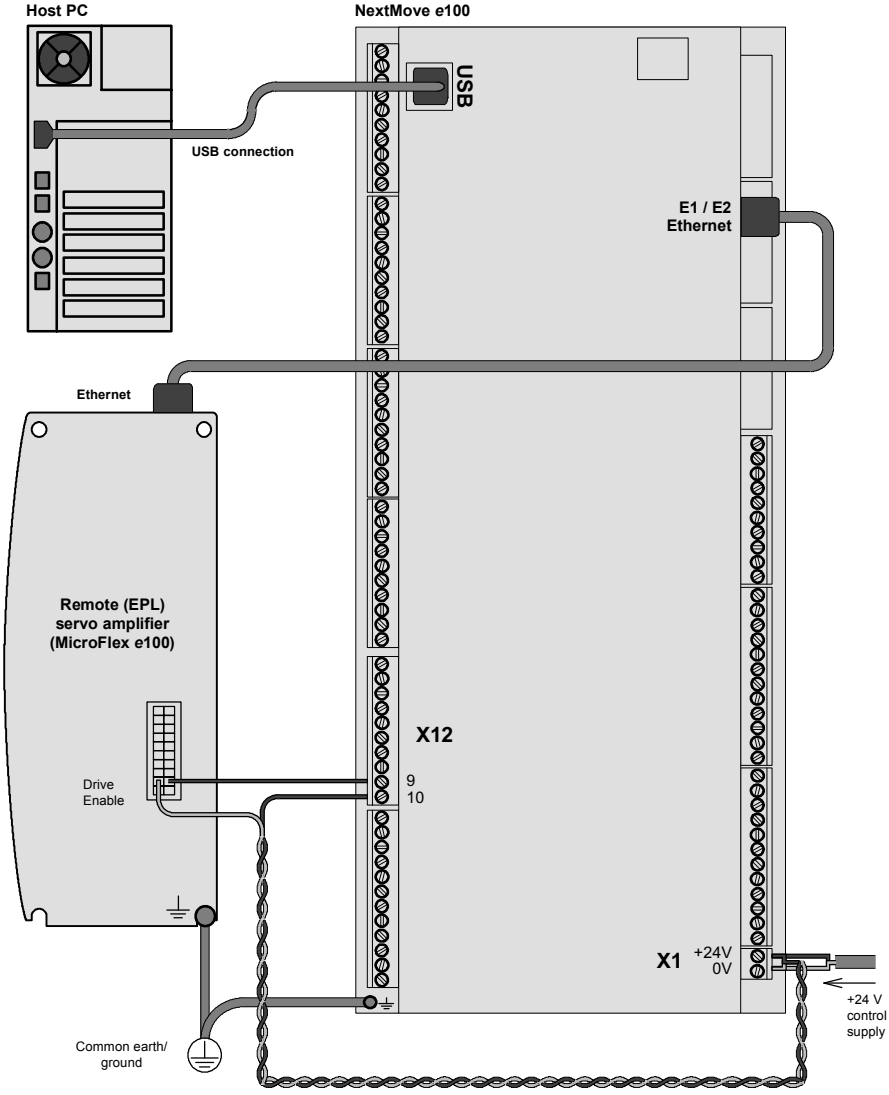

Figure 32: Example minimum system wiring

NextMove e100 connector	Pin	Name of signal	Function	Connection on amplifier (Note: connections may be labeled differently)
X1	1	0 V	Control supply ground	
	2	+24 V	Control supply +24 V input	
X12	9	REL NO	Normally open relay contact (closed to enable drive)	Drive Enable +
	10	REL COM	Common relay connection	Drive Enable -
E1 / E2		Ethernet	Ethernet / EPL communication	E1 / E2

Table 3: Connector details for minimum system wiring shown in Figure 32

5.1 Introduction

Before powering the NextMove *e*100 you will need to connect it to the PC using a USB or serial cable and install the Mint WorkBench software. This includes a number of applications and utilities to allow you to configure, tune and program the NextMove *e*100. Mint WorkBench and other utilities can be found on the Mint Motion Toolkit CD (OPT-SW-001), or downloaded from www.abbmotion.com.

5.1.1 Connecting the NextMove *e*100 to the PC

The NextMove *e*100 can be connected to the PC using either USB, TCP/IP, RS232, or RS485/422.

To use USB, connect a USB cable between a PC USB port and the NextMove *e*100 USB port. Your PC must be using Windows XP or a newer version of Windows.

To use TCP/IP, connect a CAT5e Ethernet cable between the PC and one of the NextMove *e*100 Ethernet ports.

NOTICE

You cannot connect an ordinary office PC to the NextMove *e*100 without first altering the PC's Ethernet adapter configuration. However, if you have installed a second Ethernet adapter dedicated for use with the NextMove *e*100, then this adapter's configuration can be altered without affecting the PC's office Ethernet connection. If you are unsure about making changes to your PC's Ethernet adapter configuration, or are prevented by user permission levels, ask your I.T. administrator to assist you.

NOTICE

If there is a EPL manager node (node ID 240) on the Ethernet network, then the network will be operating in EPL mode. This means any TCP/IP connection from the PC must pass through an EPL compatible router.

To use RS232 or RS485/422, connect an appropriate serial cable between the PC and the NextMove *e*100 serial port. If you are using an intermediate RS485 to RS232 converter, connect this as specified by the manufacturer. Mint WorkBench can scan all the PC's COM ports, so you can use any port.

5.1.2 Installing Mint WorkBench

The Windows user account requires administrative user rights to install Mint WorkBench.

5.1.2.1 To install Mint WorkBench from the CD (OPT-SW-001)

1. Insert the CD into the drive.
2. After a few seconds the setup wizard should start automatically. If the setup wizard does not appear, select Run... from the Windows Start menu and type

   d:\start

   where **d** represents the drive letter of the CD device.

   Follow the on-screen instructions to install Mint WorkBench.

5.1.2.2 To install Mint WorkBench from the website

To install Mint WorkBench from www.abbmotion.com, download the application and run it.

5.1.3 Starting the NextMove *e*100

If you have followed the instructions in the previous sections, you should have now connected the power sources, inputs and outputs and the USB, serial, or Ethernet cable linking the PC to the NextMove *e*100.

5.1.4 Preliminary checks

Before you apply power for the first time, it is very important to verify the following:

- Disconnect the load from the motor until instructed to apply a load.
- Inspect all power connections for accuracy, workmanship and tightness.
- Verify that all wiring conforms to applicable codes.
- Verify that the NextMove *e*100 is properly earthed/grounded.
- Check all signal wiring for accuracy.

5.1.5 Power on checks

1. Turn on the 24 V DC control supply.
2. Within approximately 20-30 seconds or less, the test sequence should complete and the Status LED should start to flash green. If the Status LED is not lit then re-check the power supply connections. If the Status LED flashes red, this indicates that the NextMove *e*100 has detected a fault - see section 6.

5.1.6 Installing the USB driver

When the NextMove *e*100 is powered, Windows will automatically detect the controller and request the driver.

1. Windows will prompt for the driver. On Windows XP, click Next on the following dialogs and Windows will locate and install the driver. For Windows Vista and newer, no interaction should be necessary.
2. When installation is complete, a new Motion Control category will be listed in Windows Device Manager.

The NextMove *e*100 is now ready to be configured using Mint WorkBench.

Note: If the NextMove *e*100 is later connected to a different USB port on the host computer, Windows may report that it has found new hardware. Either install the driver files again for the new USB port, or connect the NextMove *e*100 to the original USB port where it will be recognized in the usual way.

5.1.7 Configuring the TCP/IP connection (optional)

If you have connected the NextMove *e*100 to the PC using the Ethernet connection, it will be necessary to alter the PC's Ethernet adapter configuration to operate correctly with the NextMove *e*100.

NOTICE

You cannot connect an ordinary office PC to the NextMove *e*100 without first altering the PC's Ethernet adapter configuration. However, if you have installed a second Ethernet adapter dedicated for use with the NextMove *e*100, then this adapter's configuration can be altered without affecting the PC's office Ethernet connection. If you are unsure about making changes to your PC's Ethernet adapter configuration, or are prevented by user permission levels, ask your I.T. administrator to assist you.

NOTICE

Ensure that the NextMove *e*100 is *not* set to node ID 240 (hex F0).

The following explanation assumes the PC is connected directly to the NextMove *e*100, and not across an intermediate Ethernet network. If you wish to attempt the connection through an intermediate Ethernet network, then the network administrator must be consulted to ensure that the necessary IP addresses will be allowed and are not already allocated on the network. The NextMove *e*100 has a fixed IP address of the format 192.168.100.*xxx*. The last number, *xxx*, is the decimal value defined by the NextMove *e*100's node ID selector switches (see section 4.4.2).

1. On the Windows Start menu, select Settings, Network Connections.
2. In the Network Connections Window, right-click the 'Local Area Connection' entry for the required Ethernet adapter and choose Properties.
3. In the Local Area Connection Properties dialog, in the 'This connection uses the following items' list, select the 'Internet Protocol (TCP/IP)' entry and click **Properties**.
4. In the Internet Protocol (TCP/IP) Properties dialog, on the General tab, make a note of the existing settings. Click **Advanced...** and make a note of any existing settings. Click the Alternate Configuration tab and make a note of any existing settings.
5. On the General tab, choose the 'Use the following IP address' option.
6. In the IP address box, enter the IP address 192.168.100.241. This is the IP address that will be assigned to the Ethernet adapter. The value 241 is deliberately chosen as it is outside the range that can be used by NextMove *e*100, so avoiding possible conflicts.
7. In the Subnet mask box, enter 255.255.255.0 and click **OK**.
   Click **OK** to close the Local Area Connection Properties dialog.
8. On the Windows Start menu, select Command Prompt (often found under Accessories).
9. n the Command Prompt window, type PING 192.168.100.16, where the final value (16 in this example) is the value selected by the NextMove *e*100's node ID selector switches. In this example, the NextMove *e*100's switches would be set to HI=1 LO=0, which represents hexadecimal 10, equivalent to decimal 16 (see section 4.4.2 for a list of hexadecimal / decimal equivalents). A reply message should be returned.
10. It should now be possible to run Mint WorkBench and connect to the NextMove *e*100 using the Ethernet / TCP/IP connection.

5.2 Mint Machine Center

The Mint Machine Center (MMC) is installed as part of the Mint WorkBench software. It is used to view the network of connected controllers in a system. Individual controllers and drives are configured using Mint WorkBench.

Note: If you have only a single NextMove *e*100 connected to your PC, then MMC is probably not required. Use Mint WorkBench (see section 5.3) to configure the NextMove *e*100.

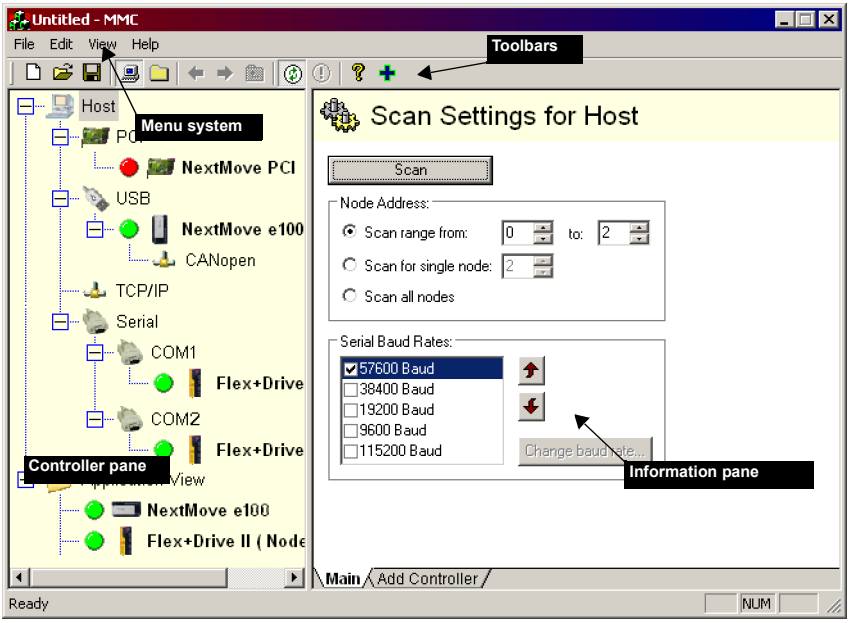

Figure 33: The Mint Machine Center software

The Mint Machine Center (MMC) provides an overview of the controller network currently accessible by the PC. The MMC contains a controller pane on the left, and an information pane on the right. In the controller pane select the Host item, then in the information pane click **Scan**. This causes MMC to scan for all connected controllers. Clicking once on a controller's name causes various options to be displayed in the information pane. Double-clicking on a controller's name launches an instance of Mint WorkBench that is automatically connected to the controller.

Application View allows the layout and organization of controllers in your machine to be modelled and described on screen. Controllers can be dragged onto the Application View icon, and renamed to give a more meaningful description, for example "Conveyor 1, Packaging Controller". Drives that are controlled by another product, such as a NextMove *e*100, can be dragged onto the NextMove *e*100 icon itself, creating a visible representation of the machine. A text description for the system and associated files can be added, and the resulting layout saved as an "MMC Workspace". When you next need to administer the system, simply loading the workspace automatically connects to all the required controllers. See the Mint help file for full details of MMC.

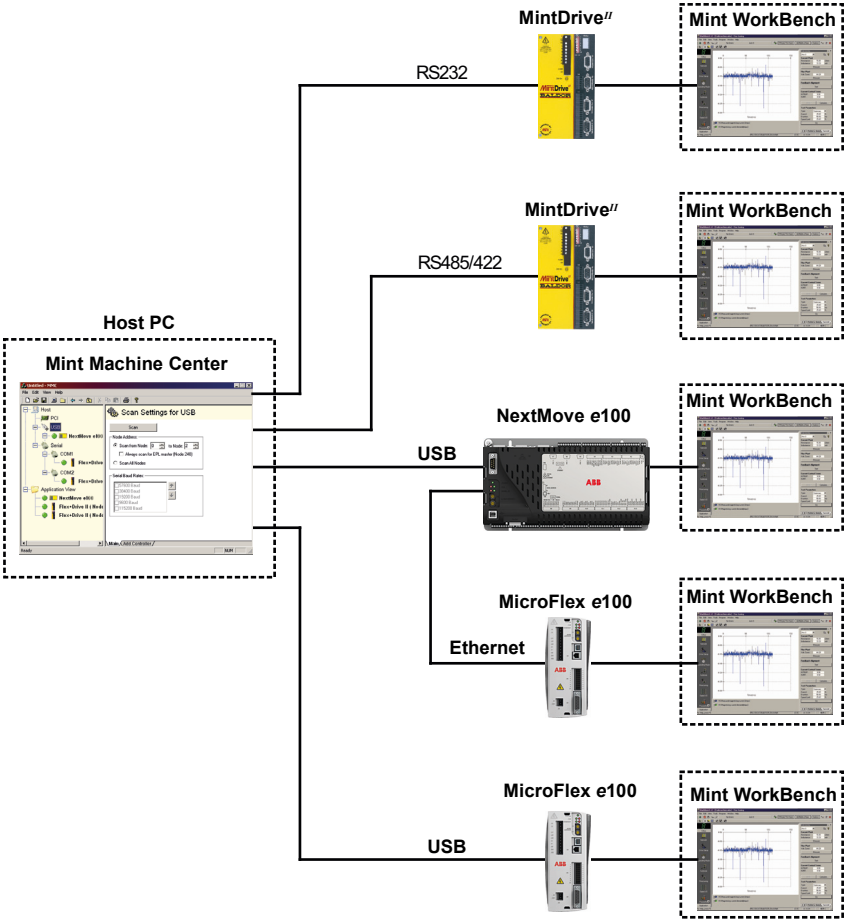

Figure 34: Typical network visibility provided by Mint Machine Center

5.2.1 Starting MMC

1. On the Windows **Start** menu, select Programs, Mint WorkBench, Mint Machine Center.

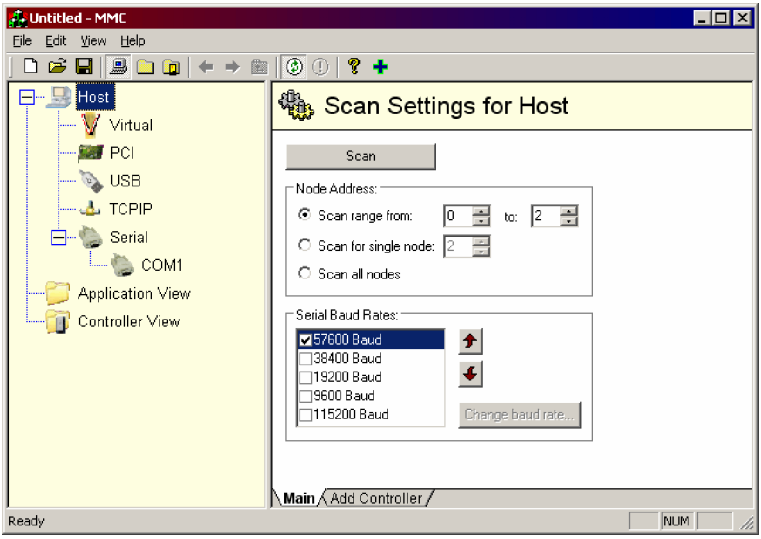

2. In the controller pane, ensure that Host is selected. In the information pane, click **Scan.**

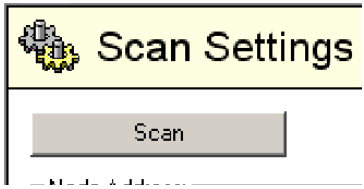

3. When the search is complete, click once on 'NextMove *e*100' in the controller pane to select it, then double click to open an instance of Mint WorkBench. The NextMove *e*100 will be already connected to the instance of Mint WorkBench, ready to configure.

   Go straight to section 5.4 to continue the configuration in Mint WorkBench.

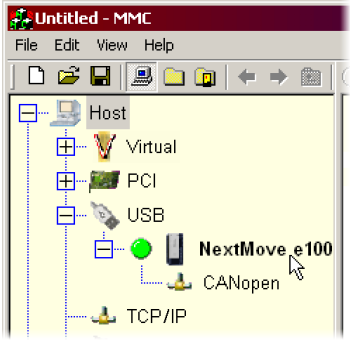

5.2.2 Viewing remote nodes connected over Ethernet (optional)

When a remote node such as MicroFlex *e*100 is connected to the NextMove *e*100 using Ethernet, it is possible to view the connection in MMC. The PC is able to connect to the remote node, even though the PC only has a physical USB connection to the NextMove *e*100. This feature is known as 'redirection', and simplifies configuration of multiple controllers on an Ethernet / EPL network.

For the following procedure, it is essential that the NextMove *e*100's node ID selector switches are *not* set to F0. Although F0 is the correct node ID to make the NextMove *e*100 an EPL manager node, the remote nodes have not yet been configured for EPL operation so will be ignored if the NextMove *e*100 is operating as a manager node. In this example, communications will use standard Ethernet, not EPL.

1. In the controller pane, ensure that Host is selected. In the information pane, click **Scan.**

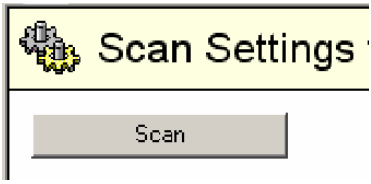

2. When the search is complete, click once on the 'Ethernet' entry underneath the 'NextMove *e*100' entry.

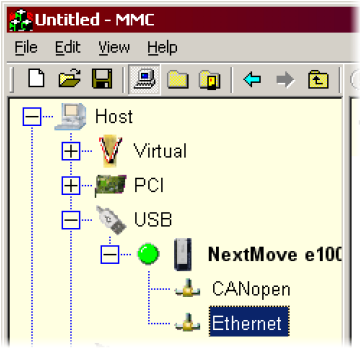

3. In the information pane, select the *Scan for single node* option.

   Enter the remote node's node ID in the adjoining box.

   Click **Refresh**.

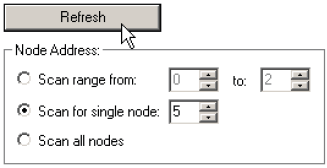

4. In the controller pane, the remote node should now be displayed on the NextMove *e*100's Ethernet connection.

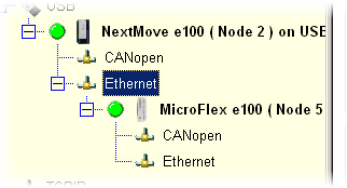

5.3 Mint WorkBench

Mint WorkBench is a fully featured application for programming and controlling the NextMove *e*100. The main Mint WorkBench window contains a menu system, the Toolbox and other toolbars. Many functions can be accessed from the menu or by clicking a button - use whichever you prefer. Most buttons include a ‘tool-tip’; hold the mouse pointer over the button (don’t click) and its description will appear.

Mint WorkBench can be started directly from the Windows Start menu, or automatically by double-clicking on a controller in the MMC’s controller pane (see section 5.2.1).

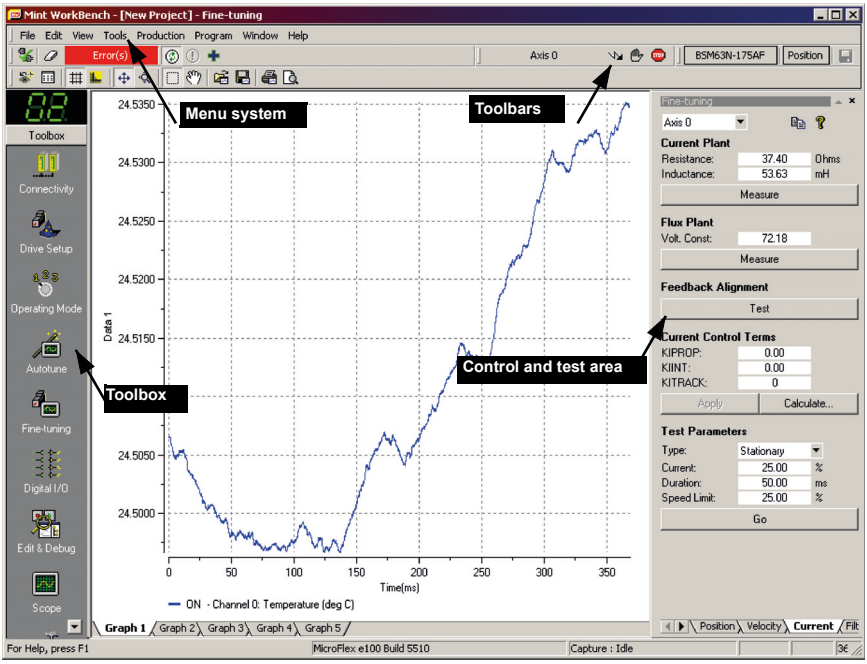

Figure 35: The Mint WorkBench software

5.3.1 Help file

Mint WorkBench includes a comprehensive help file that contains information about every Mint keyword, how to use Mint WorkBench and background information on motion control topics. The help file can be displayed at any time by pressing F1. On the left of the help window, the Contents tab shows the tree structure of the help file. Each book contains a number of topics. The Index tab provides an alphabetic list of all topics in the file, and allows you to search for them by name. The Search tab allows you to search for words or phrases appearing anywhere in the help file. Many words and phrases are underlined and highlighted with a color (normally blue) to show that they are links. Just click on the link to go to an associated keyword. Most keyword topics begin with a list of relevant *See Also* links.

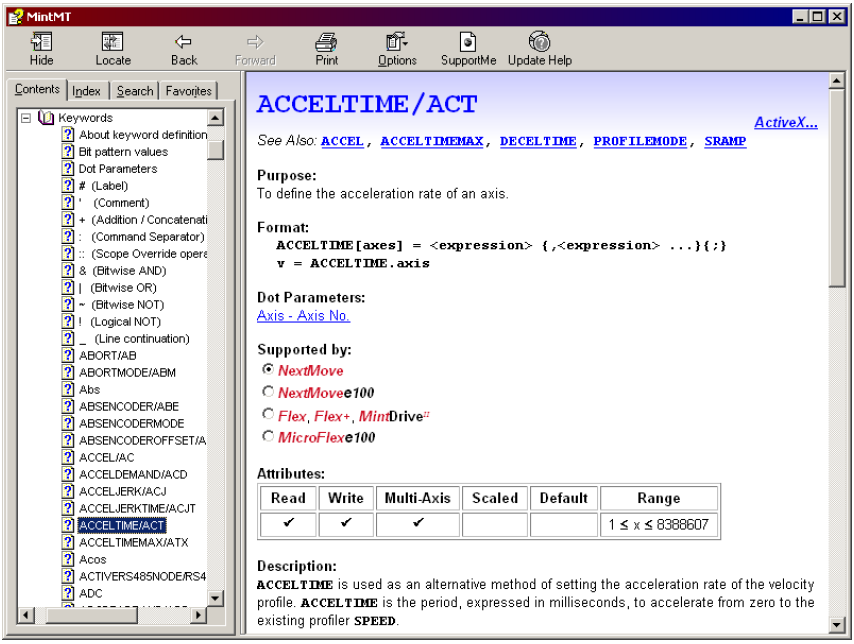

Figure 36: The Mint WorkBench help file

For help on using Mint WorkBench, click the **Contents** tab, then click the small plus sign beside the **Mint WorkBench & Mint Machine Center** book icon. Double click a topic name to display it.

5.3.2 Starting Mint WorkBench

Note: If you have already used MMC to start an instance of Mint WorkBench then the following steps are unnecessary. Go to section 5.4 to continue configuration.

1. On the Windows Start menu, select Programs, Mint WorkBench, Mint WorkBench.

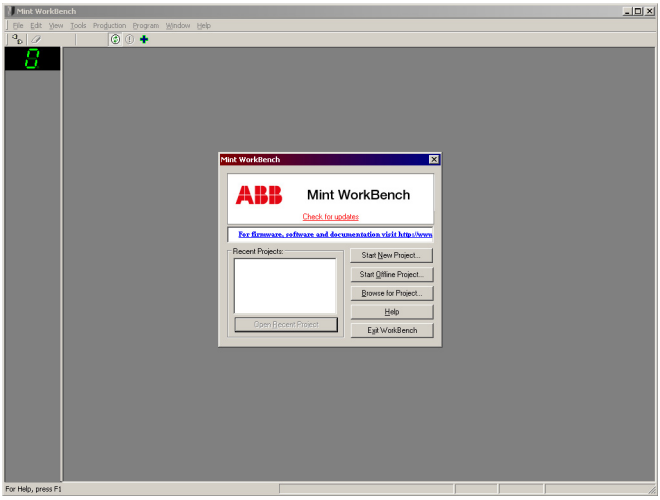

2. In the opening dialog box, click **Start New Project...** .

3. In the Select Controller dialog, go to the drop down box near the top and select the PC serial port to which the NextMove *e*100 is connected. If you are unsure which PC serial port is connected to the NextMove *e*100, increase the value in the *Search up to serial node address* box. If the NextMove *e*100 is connected using USB, it will be scanned automatically.

   Click **Scan** to search for the NextMove *e*100.

   When the search is complete, click 'NextMove *e*100' in the list to select it, and then click **Select**..

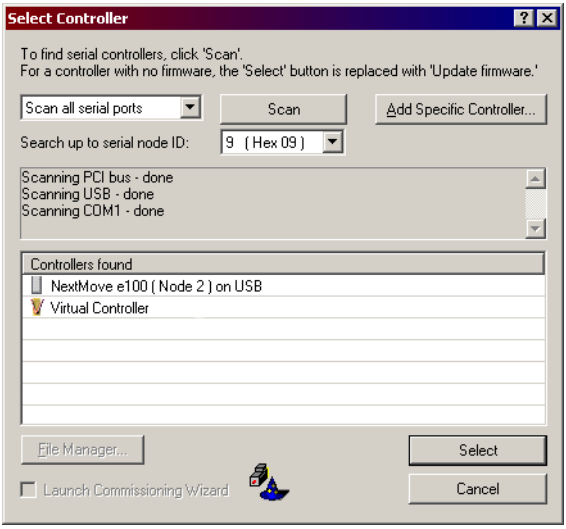

Note: If the NextMove *e*100 is not listed, check the USB or serial cable between the NextMove *e*100 and the PC. Check that the NextMove *e*100 is powered correctly, and has completed its startup sequence (indicated by the slowly flashing green Status LED). Click **Scan** to re-scan the ports.

4. A dialog box may be displayed to tell you that Mint WorkBench has detected new firmware.

   Click **OK** to continue. Mint WorkBench reads back data from the NextMove *e*100. When this is complete, Edit & Debug mode is displayed. This completes the software installation.

5.4 Configuring axes

The NextMove *e*100 is capable of controlling its own 4 stepper and 3 servo axes, plus further 'remote' axes over Ethernet POWERLINK (EPL). Each axis must be assigned a unique axis number. The axis number is used throughout Mint WorkBench and the NextMove *e*100's Mint programs to identify a particular axis. This section describes how to configure each type of axis.

5.4.1 Local axes, remote axes and profilers

The NextMove *e*100 is capable of simultaneously 'profiling' up to 16 axes. A profiler is a calculator used by the NextMove *e*100 to constantly update the required axis position during a move's progress. Axes that require a profiler include each of the 7 local axes, and each *manager node profiled* remote axis (see 5.4.1.2 below). The profilers can be used to control independent axes or to coordinate synchronized motion on up to 16 axes. For example, the NextMove *e*100 could profile its 7 local axes plus 9 independent *manager node profiled* remote axes, 4 groups of 4 synchronized axes, or any other combination. If none of the local axes are required, all 16 profilers could be used for remote *manager node profiled* remote axes.

5.4.1.1 Local axes

The NextMove *e*100 has 7 'local' axes, each of which requires one profiler (if in use). The local axes are the 4 stepper axes and 3 servo axes for which electrical connections are provided on the NextMove *e*100's edge connectors (STEP & DIR for stepper axes, Demand and ENC for servo axes).

5.4.1.2 Remote axes

In addition to the 7 local axes, the NextMove *e*100 can also control several 'remote' axes. Remote axes are drive amplifiers, such as MicroFlex *e*100, connected to the NextMove *e*100 over the EPL connection. There are three ways for the NextMove *e*100 (the manager node) to control a remote axis (a controlled node):

- NextMove *e*100 can profile moves on behalf of the drive, sending continuously updated incremental demands to the drive ('*manager node profiled*'). Each remote axis of this type consumes one profiler on the NextMove *e*100.
- NextMove *e*100 can send a single demand to the drive, and then allow the drive to profile the move itself ('*controlled node profiled*'). After sending the demand the NextMove *e*100 takes no further part in controlling the move, so this type of remote axis does not consume a profiler on the NextMove *e*100.
- NextMove *e*100 can simply monitor the feedback from the drive, sending no demand signals. This type of remote axis does not consume a profiler on the NextMove *e*100.

When controlling a remote axis, the NextMove *e*100 controller sends demand signals and/or receives position information from the *e*100 drives over the EPL network. However, since the *e*100 system uses intelligent positioning drives, the controller / drive combination does not form a traditional feedback system. Instead, the position, speed and torque loops are closed locally by the *e*100 drive for higher performance. Since the *e*100 drive / motor combination can be autotuned, setup is much simpler than traditional systems.

5.4.2 Configuring remote axes

When configuring a remote axis on the NextMove *e*100, there is no requirement to determine the type of axis, for example servo or stepper. Basic configuration requires only a node ID and an axis number to be selected. In Mint WorkBench, the System Configuration Wizard is used to assign the node IDs and axis numbers.

1. In the Toolbox, click the System Configuration icon.

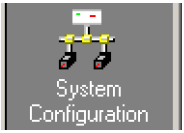

2. On the EPL Devices page, click **Add Device...** .

3. In the central drop down box, select the type of EPL device, for example MicroFlex *e*100.

   At the top of the window, select the node ID of the EPL device. The node ID allows the NextMove *e*100 to uniquely identify the EPL device on the network.

   Click **OK**.

   The Resource Mapping window is displayed.

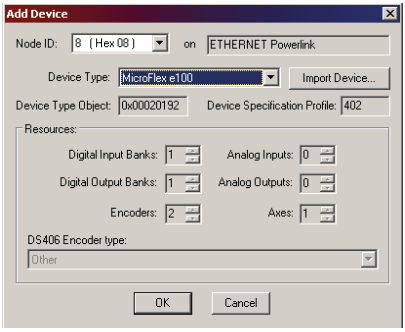

4. Click on the Axis 0 entry and click **Map...**

   The Axis resource mapping window is displayed.

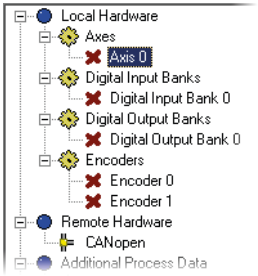

5. In the Map to manager resource drop down box, select one of the available axis numbers and click **OK**. This is the axis number that NextMove *e*100 will use to reference the EPL device's axis hardware.

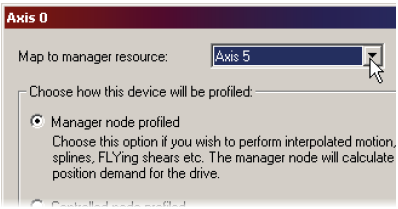

The three radio button options refer to the way the remote axis will be controlled - see section 5.4.1.

In this example, the remote axis has been assigned axis number 5. This means that when a Mint program running on the NextMove *e*100 contains a statement such as `MOVER(5)=20`, the NextMove *e*100 will send a demand to the remote axis (`5`) to move `20` units.

6. Click **Close** in the Resource Mapping window. The EPL device is now listed in the EPL Devices page.

Device	Node Address	Update	Mapped Resourc
MicroFlex e100	8 (Hex 08)	Normal	1 Axis

Note: As shown in the preceding example, the EPL device's assigned axis number (5) and node ID (8) do not have to be the same. However, in small networks it may be beneficial to assign the same node ID and axis number to simplify identification of a particular node / axis.

See the Mint WorkBench help file for full details of the device mapping process, and also examples of Mint basic code that can perform the network configuration at startup.

5.4.3 Configuring local axes

A local axis can be configured as either a servo, stepper or virtual axis. The factory preset configuration sets all axes as unassigned (off), so it is necessary to configure an axis as either stepper, servo or virtual before it can be used. The number of servo and stepper hardware channels defines how many servo and stepper axes may be configured. The Control Rate defines the accuracy with which moves on the axis will be performed. In the following example, Mint WorkBench's System Configuration Wizard will be used to configure the local axes:

1. In the Toolbox, click the System Configuration icon to start the System Configuration Wizard.

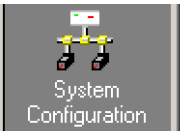

2. Click **Next >** to go to the (local) Axis Config page.

3. On the Axis Config page, click **Add Local Axis...** to display the Configure Local Axis window.

4. In the Configure Local Axis window, select one of the available axis numbers. This is the axis number that will be assigned to the local axis.

   To create a servo axis:
   Select the Servo radio button. In the Servo frame, choose which encoder input(s) will be used as the feedback input(s), and which DAC output (Demand*x* output) will be used for the axis.

   To create a stepper axis:
   Select the Stepper radio button. In the Stepper frame, choose which pulse and direction outputs (STEP*x* and DIR*x* outputs) will be used for the axis.

   To create a virtual axis:
   Select the Virtual radio button. Setting an axis to Virtual means that it can be used to simulate motion within the controller, but uses no physical outputs.

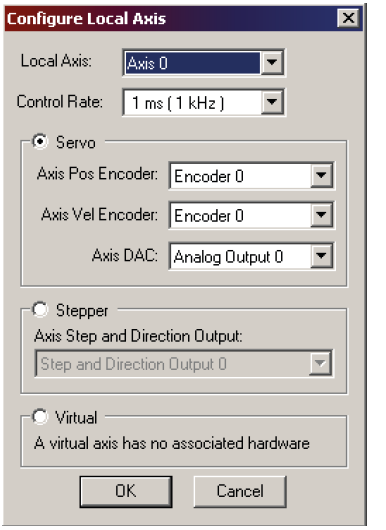

5. Click **OK** to close the Configure Local Axis window. The axis is now listed in the Axis Config page.

   Click **Next >** to continue to the end of the System Configuration Wizard, where the configuration will be downloaded and stored on the NextMove *e*100.

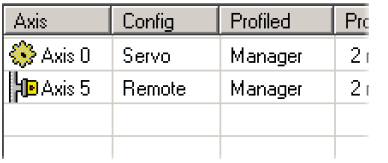

5.4.4 Selecting a scale

Mint defines all positional and speed related motion keywords in terms of encoder quadrature counts (for servo motors) or steps for stepper motors. The number of quadrature counts (or steps) is divided by the `SCALEFACTOR` allowing you to use units more suitable for your application. The unit defined by setting a value for `SCALEFACTOR` is called the *user unit* (uu).

Consider a servo motor with a 1000 line encoder. This provides 4000 quadrature counts for each revolution. If `SCALEFACTOR` is not set, a Mint command that involves distance, speed, or acceleration may need to use a large number to specify a significant move. For example `MOVER(0)=16000` (Move Relative) would rotate the motor by 16000 quadrature counts - only four revolutions. By setting a `SCALEFACTOR` of 4000, the user unit becomes revolutions. The more understandable command `MOVER(0)=4` could now be used to move the motor four revolutions.

The same concept applies to stepper motors, where the scale can be set according to the number of steps per revolution. Typically, this would be 200 for a motor with a 1.8° step angle, or 400 if driven in half step mode. By setting a `SCALEFACTOR` of 200 (or 400 if driven in half step mode), the user unit becomes revolutions. In applications involving linear motion a suitable value for `SCALEFACTOR` would allow commands to express values in linear distance, for example millimeters, inches or feet.

When setting a `SCALEFACTOR` for a remote axis, the value is *not* sent to the remote axis. The scale factor operates for commands and programs running on the NextMove *e*100, and should be appropriate for the remote axis' motor feedback device. The actual positional data transmitted between the NextMove *e*100 and the remote axis is converted into 'raw' encoder counts. This means that no matter what `SCALEFACTOR` has been set on the remote axis (if at all), positional commands sent by the NextMove *e*100 are always received and interpreted correctly by the remote axis.

1. In the Toolbox, click the Parameters icon.

2. In the parameters tree, scroll to the entry for the chosen axis. This is found in the Axis/Channel/Bank folder, under the Axis sub heading.

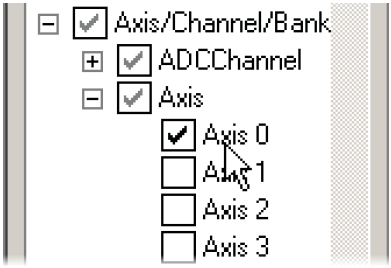

3. The adjacent table will list the parameters for the chosen axis.

   Scroll to the entry for ScaleFactor.

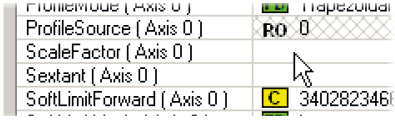

Click in the Active column and enter a value for the scale factor. This immediately sets the scaling factor for the selected axis, which will remain in the NextMove *e*100 until another scale is defined or power is removed. A yellow ‘C’ icon will appear to the left of the ScaleFactor entry to indicate that the value has been changed. Other parameters that depend on the scale factor may also change automatically to maintain their relative value; these will also be indicated by a yellow ‘C’ icon. See the Mint help file for full details of the Parameters tool.

Note: The parameter list also contains entries for *PosScaleFactor*, *VelScaleFactor* and *AccelScaleFactor*. These parameters are provided to comply with the CANopen DS402 Device Profile for Drives and Motion Control, which specifies separate scaling for position, velocity and acceleration. Each can be set to different values so that, for example, position could be specified in mm, velocity in m/s^2 and acceleration in g. However, in most cases all scaling will be required to use the same type of unit, for example meters for position, m/s for velocity and m/s^2 for acceleration. For this reason, setting the general purpose ScaleFactor parameter will automatically set PosScaleFactor, VelScaleFactor and AccelScaleFactor to the same values. See the Mint help file for further details.

5.4.5 Setting the drive enable output (optional, local axes only)

Note: In many applications, a drive amplifier will have its drive enable input activated by other circuitry (often including an emergency stop switch) so a physical drive enable signal from the NextMove *e*100 is not required.

A drive enable output should not be used for remote drives connected by EPL to the NextMove *e*100; see section 4.3.1.2 on page 4-7.

A drive enable output allows NextMove *e*100 to enable the external drive amplifier to allow motion, or disable it in the event of an error. Each axis can be configured with its own drive enable output, or can share an output with other axes. If an output is shared, an error on any of the axes sharing the output will cause all of them to be disabled. The drive enable output can be either the relay or a digital output.

For a remote axis (e.g. MicroFlex *e*100), a physical drive enable connection from the NextMove *e*100 may not be required. The remote axis' drive enable input can be wired to external safety stop circuits to provide a fail-safe method for disabling the drive, while in normal operation commands over the EPL network can be used to enable/disable the drive.

1. In the Toolbox, click the Digital I/O icon.

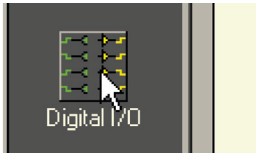

2. At the bottom of the Digital I/O screen, click the Digital Outputs tab.

   The left of the screen shows yellow High and Low icons. These describe how the output should behave when activated (to enable the axis).

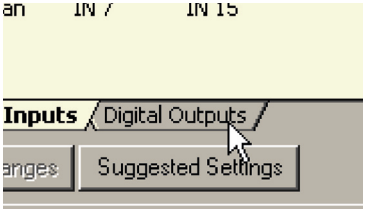

3. If you are going to use the relay, ignore this step and go straight to step 4.

   If you are going to use a digital output, the active level must be set. Drag the appropriate yellow icon to the grey OUT icon that will be used as the drive enable output.

   In this example, OUT1 is being used, and is being configured as active high.

   The icon's color will change to bright blue.

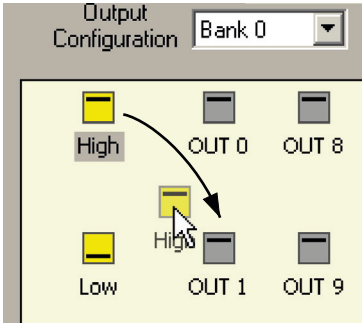

4. If you are going to use the relay, drag the OUT12 icon (the relay output) to the grey Drive Enable OP icon on the right of the screen.

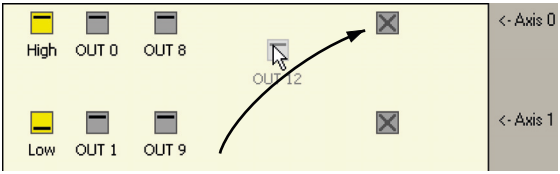

To configure multiple axes to use the relay output, repeat this step for the other axes.

If you are going to use a digital output, drag the bright blue OUT icon to the grey Drive Enable OP axis icon on the right of the screen.

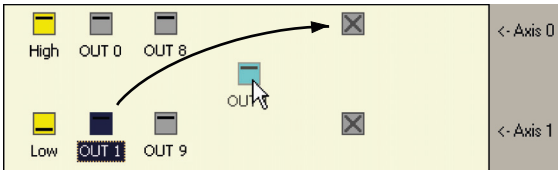

To configure multiple axes with the same drive enable output, repeat this step for the other axes.

5. Click **Apply** at the bottom of the screen. This sends the output configuration to the NextMove *e*100.

5.4.6 Testing the drive enable output

1. On the main Mint WorkBench toolbar, click the Axes button. In the Select Default Axes dialog, select the axes to be controlled. Click **OK** to close the dialog.

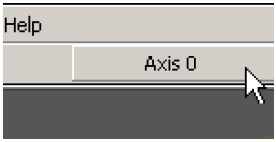

2. On the main Mint WorkBench toolbar, click the Drive enable button. Click the button again. Each time you click the button, the drive enable output(s) for the selected axes are toggled.

   When the button is in the pressed (down) position the drive amplifier should be enabled. When the button is in the raised (up) position the drive amplifier should be disabled.

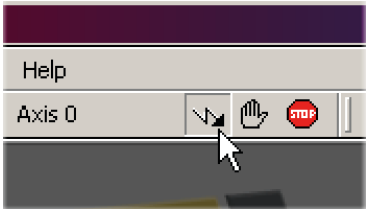

If this is not working, or the action of the button is reversed, check the electrical connections between the NextMove *e*100 and drive amplifier. If you are using the relay, check that you are using the correct normally open (REL NO) or normally closed (REL NC) connections. If you are using a digital output, check that it is using the correct high or low triggering method expected by the drive amplifier.

5.5 Local stepper axis - testing

This section describes the method for testing a local stepper axis. The stepper control is an open loop system so no tuning is necessary. See section 5.4.3 for details about creating a stepper axis.

5.5.1 Testing the output

This section tests the operation and direction of the output. It is recommended that the system is initially tested with the motor shaft disconnected from other machinery.

1. Check that the Drive enable button is pressed (down).

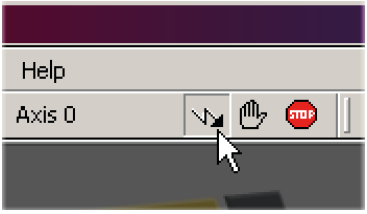

2. In the Toolbox, click the Edit & Debug icon.

3. Click in the Command window.
4. Type:
   `JOG(0)=2`

   where 0 is the axis to be tested and 2 is the speed.

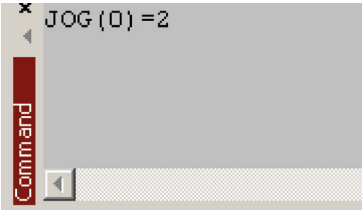

   The `JOG` command specifies the speed in user units per second, so the speed is affected by `SCALEFACTOR` (section 5.4.4). If you have not selected a scale, the command `JOG(0)=2` will cause rotation at only 2 half steps per second, so it may be necessary to increase this figure significantly, to 200 for example. If you have selected a scale that provides user units of revolutions (as described in section 5.4.4), `JOG(0)=2` will cause rotation at 2 revolutions per second. If there appears to be no step or direction output, check the electrical connections to the axis' assigned STEP*x* and DIR*x* outputs.

5. To repeat the tests for reverse moves, type:
   `JOG(0)=-2`

6. To remove the demand and stop the test, type:
   `STOP(0)`

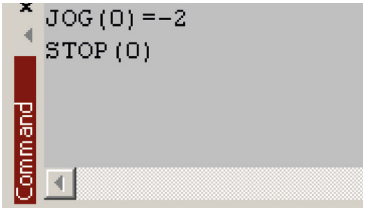

5.6 Local servo axis - testing and tuning

This section describes the method for testing and tuning a local servo axis. The drive amplifier must already have been tuned for basic current or velocity control of the motor. See section 5.4.3 for details about creating a servo axis.

5.6.1 Testing the demand output

This section tests the operation and direction of the demand output for axis 0. The example assumes that axis 0 has already been configured as a servo axis, using the default hardware channel 0 (see section 5.4.3). It is recommended that the motor is disconnected from the load for this test.

1. Check that the Drive enable button is pressed (down).

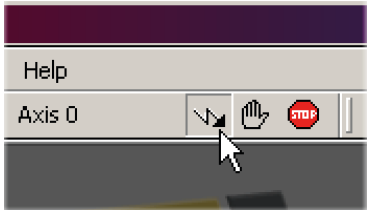

2. In the Toolbox, click the Edit & Debug icon.

3. Click in the Command window.

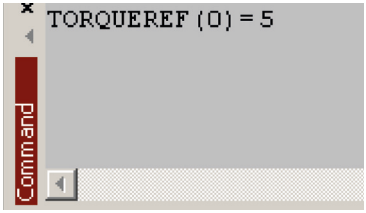

4. Type:
   `TORQUEREF(0)=5`

   where 0 is the axis to be tested. In this example, this should cause a demand of +5% of maximum output (0.5 V) to be produced at the DEMAND0 output (connector X13, pin 1). In Mint WorkBench, look at the Spy window located on the right of the screen. In the Axis selection box at the top, select Axis 0.

   The Spy window's Command display should show 5 percent (approximately). If there seems to be no demand output, check the electrical connections to X13.

   The Spy window's Velocity display should show a positive value. If the value is negative check that the DEMAND0 output, and the Encoder0 A and B channels, have been wired correctly.
   If necessary, the `ENCODERMODE` keyword can be used to swap the encoder A and B channels, thus reversing the encoder count - see the Mint help file.

   See section 4.2.2 for details of the demand outputs.

5. To repeat the tests for negative (reverse) demands, type:
   `TORQUEREF(0)=-5`

   This should cause a demand of -5% of maximum output (-0.5 V) to be produced at the DEMAND0 output. Correspondingly, the Spy window's Velocity display should show a negative value.

6. To remove the demand and stop the test, type:
   `STOP(0)`

   This should cause the demand produced at the DEMAND0 output to become 0 V.

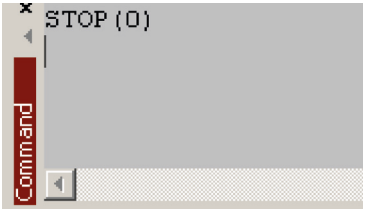

If it is necessary for the motor to turn in the opposite direction for a positive demand, then the `DACMODE` and `ENCODERMODE` keywords should be used. The `DACMODE` keyword is used to invert the demand output voltage. The `ENCODERMODE` keyword must then also be used to reverse the incoming feedback signal, to correspond with the inverted demand output. Note that if `ENCODERMODE` had *already* been used to compensate for a reversed encoder count (as described in step 4. above), it will be necessary to change it back to its original setting to correspond with the inverted demand output set using `DACMODE`. Whichever keywords are used, for the control system to operate correctly, a positive demand must result in a positive change in position and a negative demand must result in a negative change in position.

See the Mint help file for details of each keyword.

5.6.2 An introduction to closed loop control

This section describes the basic principles of closed loop control. If you are familiar with closed loop control go straight to section 5.7.1.

When there is a requirement to move an axis, the NextMove *e*100 control software translates this into a demand output voltage (or just a numerical value over EPL). This is used to control the drive amplifier which powers the motor. An encoder or resolver on the motor is used to measure the motor's position. At specified intervals* the NextMove *e*100 compares the demanded and measured positions. It then calculates the demand needed to minimize the difference between them, known as the **following error**.

This system of constant measurement and correction is known as closed loop control.
[*For the analogy, imagine you are in your car waiting at an intersection. You are going to go straight on when the lights change, just like the car standing next to you which is called* Demand. *You're not going to race* Demand *though - your job as the controller (NextMove e100) is to stay exactly level with* Demand, *looking out of the window to measure your position*].

The main term that the NextMove *e*100 uses to correct the error is called **Proportional gain** (**KPROP**). A very simple proportional controller would simply multiply the amount of error by the Proportional gain and apply the result to the motor [*the further* Demand *gets ahead or behind you, the more you press or release the gas pedal*].

If the Proportional gain is set too high overshoot will occur, resulting in the motor vibrating back and forth around the desired position before it settles [*you press the gas pedal so hard you go right past* Demand. *To try and stay level you ease off the gas, but end up falling behind a little. You keep repeating this and after a few tries you end up level with* Demand, *traveling at a steady speed. This is what you wanted to do but it has taken you a long time*].
If the Proportional gain is increased still further, the system becomes unstable [*you keep pressing and then letting off the gas pedal so hard you never travel at a steady speed*].

To reduce the onset of instability, a term called **Velocity Feedback gain** (**KVEL**) is used. This resists rapid movement of the motor and allows the Proportional gain to be set higher before vibration starts. Another term called **Derivative gain** (**KDERIV**) can also be used to give a similar effect.

With Proportional gain and Velocity Feedback gain (or Derivative gain) it is possible for a motor to come to a stop with a small following error [Demand *stopped so you stopped too, but not quite level*]. The NextMove *e*100 tries to correct the error, but because the error is so small the amount of torque demanded might not be enough to overcome friction.

This problem is overcome by using a term called **Integral gain** (**KINT**). This sums the error over time, so that the motor torque is gradually increased until the positional error is reduced to zero [*like a person gradually pushing harder and harder on your car until they've pushed it level with* Demand].

However, if there is large load on the motor (it is supporting a heavy suspended weight for example), it is possible for the output to increase to 100% demand. This effect can be limited using the `KINTLIMIT` keyword which limits the effect of KINT to a given percentage of the demand output. Another keyword called `KINTMODE` can even turn off integral action when it's not needed.

***** The sampling interval can be changed using the `CONTROLRATE` keyword - see the Mint help file.

The remaining gain terms are **Velocity Feed forward** (**KVELFF**) and **Acceleration Feed forward** (**KACCEL**) described below.

In summary, the following rules can be used as a guide:

- KPROP: Increasing KPROP will speed up the response and reduce the effect of disturbances and load variations. The side effect of increasing KPROP is that it also increases the overshoot, and if set too high it will cause the system to become unstable. The aim is to set the Proportional gain as high as possible without getting overshoot, instability or hunting on an encoder edge when stationary (the motor will buzz).
- KVEL: This gain has a damping effect on the whole response, and can be increased to reduce any overshoot. If KVEL becomes too large it will amplify any noise on the velocity measurement and introduce oscillations.
- KINT: This gain has a de-stabilizing effect, but a small amount can be used to reduce any steady state errors. By default, KINTMODE is always on (mode 1).
- KINTLIMIT: The integration limit determines the maximum value of the effect of integral action. This is specified as a percentage of the full scale demand.
- KDERIV: This gain has a damping effect dependent on the rate of change of error, and so is particularly useful for removing overshoot.
- KVELFF: This is a feed forward term and as such has a different effect on the servo system than the previous gains. KVELFF is outside the closed loop and therefore does not have an effect on system stability. This gain allows a faster response to demand speed changes with lower following errors, for example you would increase KVELFF to reduce the following error during the slew section of a trapezoidal move. The trapezoidal test move can be used to fine-tune this gain. This term is especially useful with velocity controlled servos
- KACCEL: This term is designed to reduce velocity overshoots on high acceleration moves.

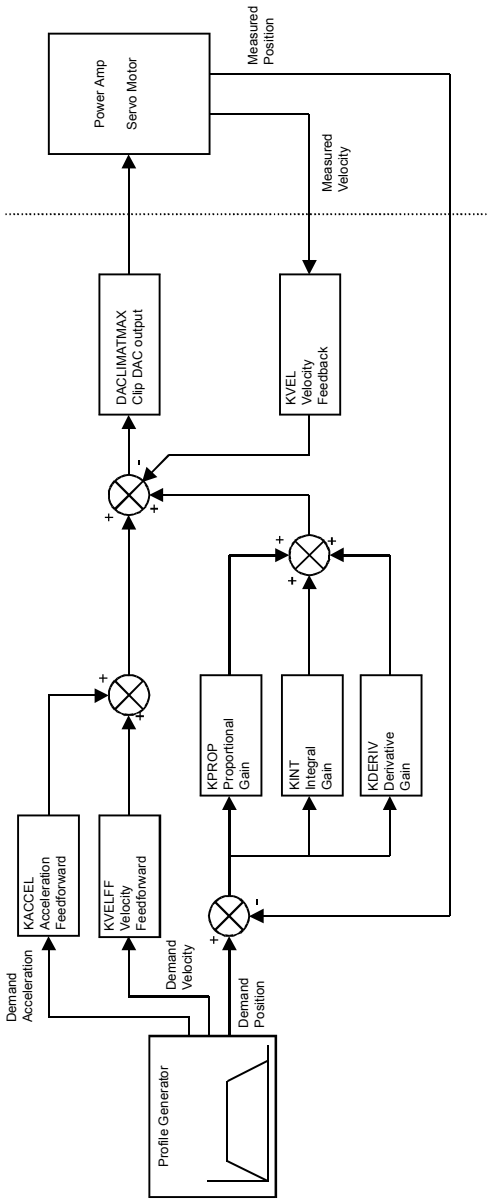

Figure 37: The NextMove e100 servo loop

5.7 Local servo axis - tuning for current control

5.7.1 Selecting servo loop gains

All servo loop parameters default to zero, meaning that the demand output will be zero at power up. Most drive amplifiers can be set to current (torque) control mode or velocity control mode; check that the drive amplifier will operate in the correct mode. The procedure for setting system gains differs slightly for each. To tune an axis for velocity control, go straight to section 5.8. It is recommended that the system is initially tested and tuned with the motor shaft disconnected from other machinery. Confirm that the encoder feedback signals from the motor or drive amplifier have been connected, and that a positive demand causes a positive feedback signal.

Note: The method explained in this section should allow you to gain good control of the motor, but will not necessarily provide the optimum response without further fine-tuning. Unavoidably, this requires a good understanding of the effect of the gain terms.

1. In the Toolbox, click the Fine-tuning icon.

   The Fine-tuning window is displayed at the right of the screen. The main area of the Mint WorkBench window displays the Capture window. When tuning tests are performed, this will display a graph representing the response.

2. In the Fine-tuning window, click in the Axis selection box at the top and select Axis 0 (assuming axis 0 has already been configured as a servo axis - see section 5.4.3).

   Click in the KDERIV box and enter a starting value of 1.

   Click **Apply** and then turn the motor shaft by hand. Repeat this process, slowly increasing the value of KDERIV until you begin to feel some resistance in the motor shaft. The exact value of KDERIV is not critical at this stage.

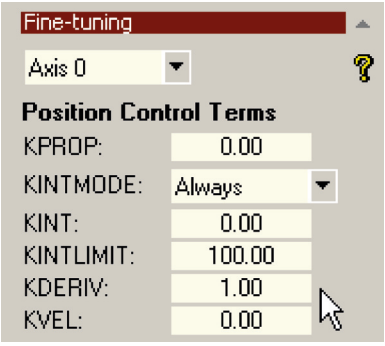

3. Click in the KPROP box and enter a value that is approximately one quarter of the value of KDERIV. If the motor begins to vibrate, decrease the value of KPROP or increase the value of KDERIV until the vibration stops. Small changes may be all that is necessary.

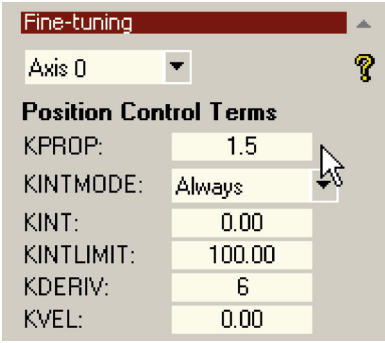

4. In the Move Type drop down box, check that the move type is set to Step.

5. Click in the Distance box and enter a distance for the step move. It is recommended to set a value that will cause the motor to turn a short distance, for example one revolution.

Note: The distance depends on the scale set in section 5.4.4.
If you set a scale so that units could be expressed in revolutions (or other unit of your choice), then those are the units that will be used here. If you did not set a scale, the amount you enter will be in encoder counts.

6. Click in the Duration box and enter a duration for the move, in seconds. This should be a short duration, for example 0.15 seconds.

7. Click **Go**.

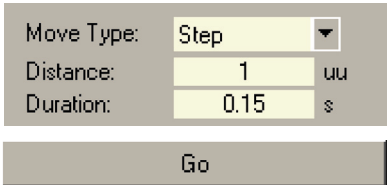

The NextMove *e*100 will perform the move and the motor will turn. As the soon as the move is completed, Mint WorkBench will upload captured data from the NextMove *e*100. The data will then be displayed in the Capture window as a graph.

Note: The graphs that you see will not look exactly the same as the graphs shown here! Remember that each motor has a different response.

8. Below the graph, click on the trace titles to turn off traces that are not required, leaving Demand position and Measured position turned ON.

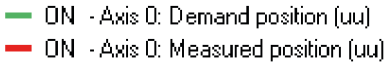

5.7.2 Underdamped response

If the graph shows that the response is underdamped (it overshoots the demand, as shown in Figure 38) then the value for KDERIV should be increased to add extra damping to the move. If the overshoot is excessive or oscillation has occurred, it may be necessary to reduce the value of KPROP.

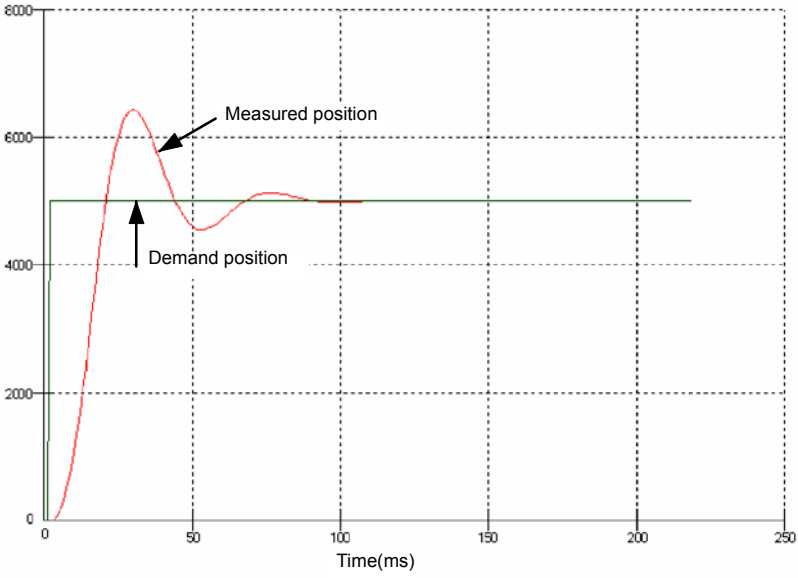

Figure 38: Underdamped response

9. Click in the KDERIV and/or KPROP boxes and make the required changes. The ideal response is shown in section 5.7.4.

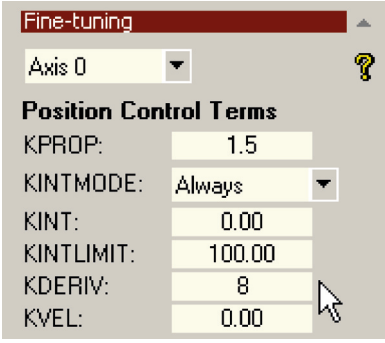

5.7.3 Overdamped response

If the graph shows that the response is overdamped (it reaches the demand too slowly, as shown in Figure 39) then the value for KDERIV should be decreased to reduce the damping of the move. If the overdamping is excessive, it may be necessary to increase the value of KPROP.

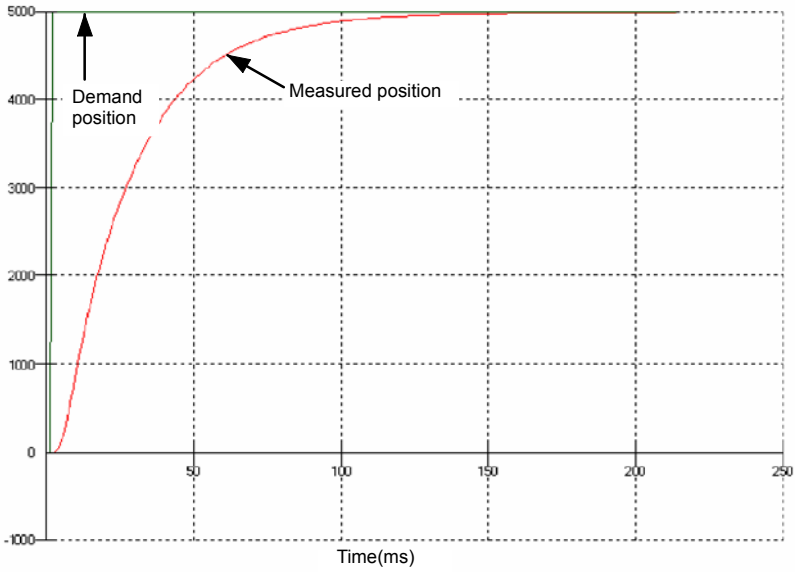

Figure 39: Overdamped response

10. Click in the KDERIV and/or KPROP boxes and make the required changes. The ideal response is shown in section 5.7.4.

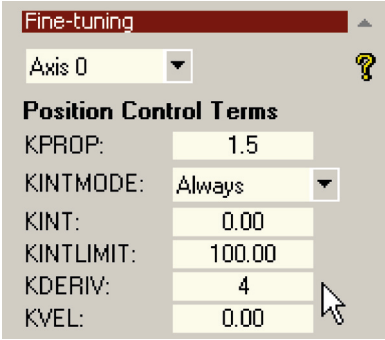

5.7.4 Critically damped response

If the graph shows that the response reaches the demand quickly and only overshoots the demand by a small amount, this can be considered an ideal response for most systems. See Figure 40.

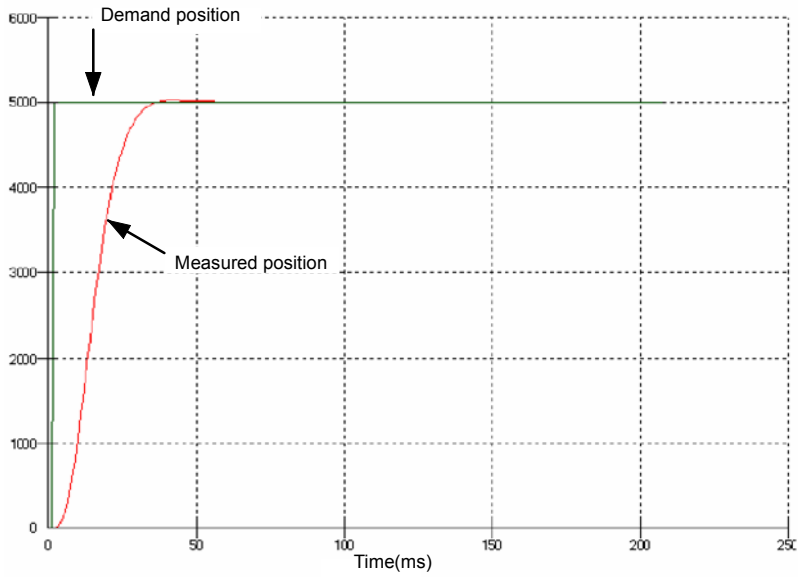

Figure 40: Critically damped (ideal) response

5.8 Local servo axis - tuning for velocity control

Drive amplifiers designed for velocity control incorporate their own velocity feedback term to provide system damping. For this reason, KDERIV (and KVEL) can often be set to zero.

Correct setting of the velocity feed forward gain KVELFF is important to get the optimum response from the system. The velocity feed forward term takes the instantaneous velocity demand from the profile generator and adds this to the output block (see Figure 37).
KVELFF is outside the closed loop and therefore does not have an effect on system stability. This means that the term can be increased to maximum without causing the motor to oscillate, provided that other terms are setup correctly.

When setup correctly, KVELFF will cause the motor to move at the speed demanded by the profile generator. This is true without the other terms in the closed loop doing anything except compensating for small errors in the position of the motor. This gives faster response to changes in demand speed, with reduced following error.

Before proceeding, confirm that the encoder feedback signals from the motor or drive amplifier have been connected, and that a positive demand causes a positive feedback signal.

5.8.1 Calculating KVELFF

To calculate the correct value for KVELFF, you will need to know:

- The speed, in revolutions per minute, produced by the motor when a maximum demand (+10 V) is applied to the drive amplifier.
- The axis' position loop update rate (the Control Rate setting selected in the Config Local Axis dialog - see section 5.4.3).
- The resolution of the encoder input.

The servo loop formula uses speed values expressed in *quadrature counts per servo loop*. To calculate this figure:

1. First, divide the speed of the motor, in revolutions per minute, by 60 to give the number of revolutions per second. For example, if the motor speed is 3000 rpm when a maximum demand (+10 V) is applied to the drive amplifier:

   Revolutions per second = 3000 / 60
   = <u>50</u>

2. Next, calculate how many revolutions will occur during one servo loop. The factory preset position loop update rate is 1 kHz (0.001 seconds), so:

   Revolutions per servo loop = 50 x 0.001 seconds
   = <u>0.05</u>

3. Now calculate how many quadrature encoder counts there are per revolution. The NextMove *e*100 counts both edges of both pulse trains (CHA and CHB) coming from the encoder, so for every encoder line there are 4 'quadrature counts'. With a 1000 line encoder:

   Quadrature counts per revolution = 1000 x 4
   = <u>4000</u>

4. Finally, calculate how many quadrature counts there are per servo loop:

   Quadrature counts per servo loop = 4000 x 0.05
   = <u>200</u>

The analog demand output is controlled by a 12-bit DAC, which can create output voltages in the range -10 V to +10 V. This means a maximum output of +10 V corresponds to a DAC value of 2048. The value of KVELFF is calculated by dividing 2048 by the number of quadrature counts per servo loop, so:

KVELFF	=	2048 / 200
	=	**10.24**

5. Click in the KVELFF box and enter the value.

   The calculated value should give zero following error at constant velocity. Using values greater than the calculated value will cause the controller to have a following error ahead of the desired position. Using values less than the calculated value will cause the controller to have following error behind the desired position.

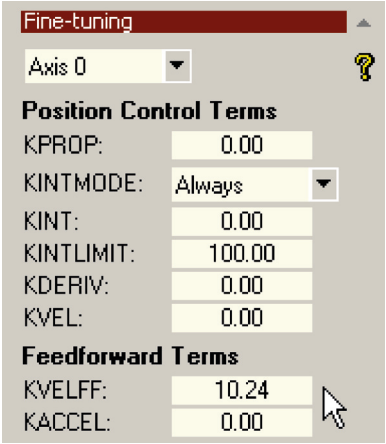

6. In the Move Type drop down box, check that the move type is set to Trapezoid.

7. Click in the Distance box and enter a distance for the step move. It is recommended to set a value that will cause the motor to make a few revolutions, for example 10.

Note: The distance depends on the scale set in section 5.4.4. If you set a scale so that units could be expressed in revolutions (or other unit of your choice), then those are the units that will be used here. If you did not set a scale, the amount you enter will be in encoder counts.

8. Click **Go**.

The NextMove *e*100 will perform the move and the motor will turn. As the soon as the move is completed, Mint WorkBench will upload captured data from the NextMove *e*100. The data will then be displayed in the Capture window as a graph.

Note: The graph that you see will not look exactly the same as the graph shown here! Remember that each motor has a different response.

9. Using the check boxes below the graph, select the Measured velocity and Demand velocity traces.

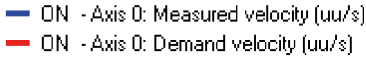

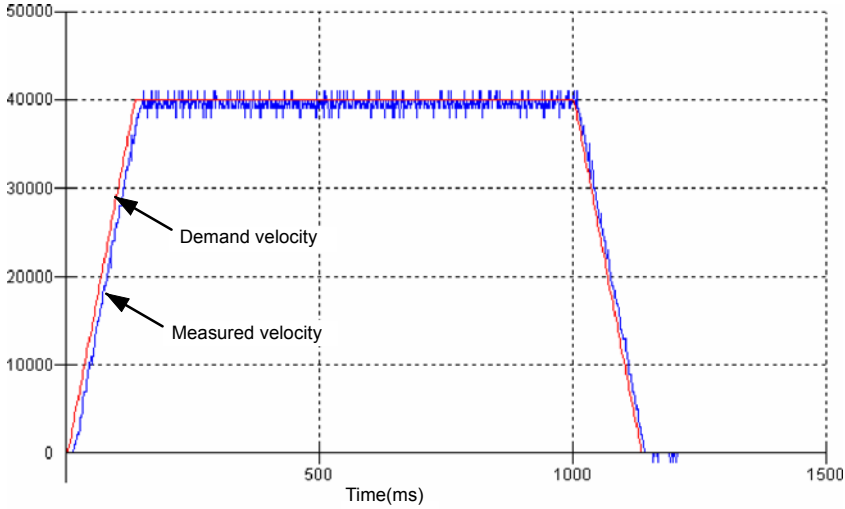

Figure 41: Correct value of KVELFF

It may be necessary to make changes to the calculated value of KVELFF. If the trace for Measured velocity appears above the trace for Demand velocity, reduce the value of KVELFF. If the trace for Measured velocity appears below the trace for Demand velocity, increase the value of KVELFF. Repeat the test after each change. When the two traces appear on top of each other (approximately), the correct value for KVELFF has been found as shown in Figure 41.

5.8.2 Adjusting KPROP

The KPROP term can be used to reduce following error. Its value will usually be much smaller than the value used for an equivalent current controlled system. A fractional value, for example 0.1, will probably be a good starting figure which can then be increased slowly.

1. Click in the KPROP box and enter a starting value of 0.1.

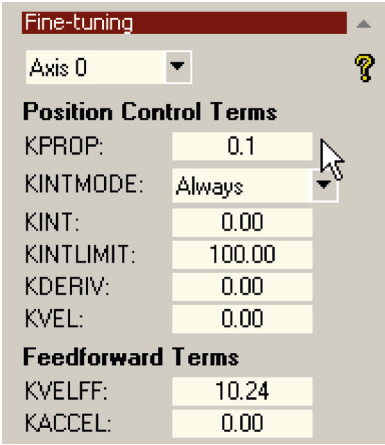

2. Click **Go**.

The NextMove *e*100 will perform the move and the motor will turn. As the soon as the move is completed, Mint WorkBench will upload captured data from the NextMove *e*100. The data will then be displayed in the Capture window as a graph.

Note: The graph that you see will not look exactly the same as the graph shown here! Remember that each motor has a different response.

3. Using the check boxes below the graph, select the Measured position and Demand position traces.

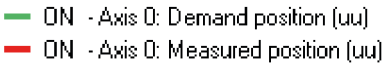

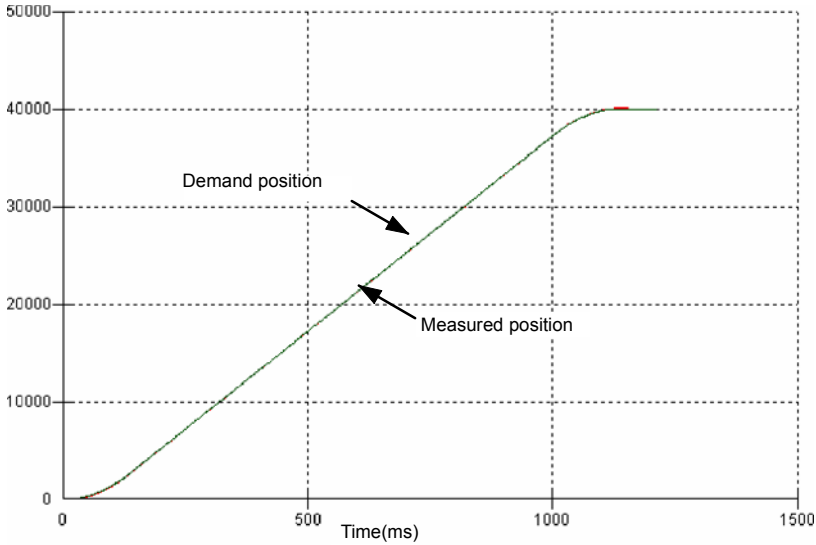

Figure 42: Correct value of KPROP

The two traces will probably appear with a small offset from each other, which represents the following error. Adjust KPROP by small amounts until the two traces appear on top of each other (approximately), as shown in Figure 42.

Note: It may be useful to use the zoom function to magnify the end point of the move. In the graph area, click and drag a rectangle around the end point of the traces. To zoom out, right-click in the graph area and choose Reset Zoom.

5.9 Local servo axis - eliminating steady-state errors

In systems where precise and accurate positioning is required, it is often necessary to position within one encoder count. Proportional gain, KPROP, is not normally able to achieve this because a very small following error will only produce a small demand for the drive amplifier which may not be enough to overcome mechanical friction (this is particularly true in current controlled systems). This error can be overcome by applying integral gain. The integral gain, KINT, works by accumulating following error over time to produce a demand sufficient to move the motor into the required position with zero following error. KINT can therefore overcome errors caused by gravitational effects such as vertically moving linear axes. With current controlled drive amplifiers a non-zero demand output is required to hold the load in the correct position, to achieve zero following error.

Care is required when setting KINT since a high value will cause instability during moves.
A typical value for KINT would be 0.1. The effect of KINT should also be limited by setting the integration limit, KINTLIMIT, to the smallest possible value that is sufficient to overcome friction or static loads, for example 5. This will limit the contribution of the integral term to 5% of the full demand output range.

1. Click in the KINT box and enter a small starting value, for example 0.1.
2. Click in the KINTLIMIT box and enter a value of 5.

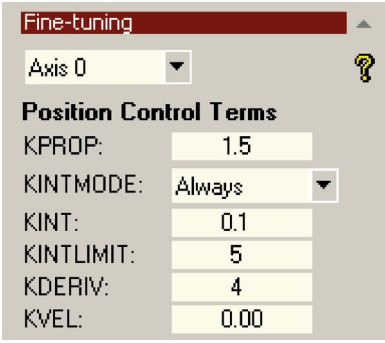

With NextMove *e*100, the action of KINT and KINTLIMIT can be set to operate in various modes:

- Never - the KINT term is never applied
- Always - the KINT term is always applied
- Smart - the KINT term is only applied when the demand speed is zero or constant.
- Steady State - the KINT term is only applied when the demand speed is zero.

This function can be selected using the KINTMODE drop down box.

5.10 Local digital input/output configuration

The Digital I/O window can be used to setup other digital I/O on the NextMove *e*100.

5.10.1 Digital input configuration

The Digital Inputs tab allows you to define how each digital input will be triggered, and if it should be assigned to a special purpose function such as a Home or Limit input. There is one *<- Axis x* row for each local axis configured in section 5.4.3. In the following example, digital input 1 will be set to trigger on an active low input, and allocated to the forward limit input of axis 0:

1. In the Toolbox, click the Digital I/O icon.

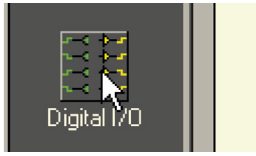

2. At the bottom of the Digital I/O screen, click the **Digital Inputs** tab.

   The left of the screen shows a column of yellow icons - High, Low, Rising, Falling and Rise/Fall. These describe how the input will be triggered.

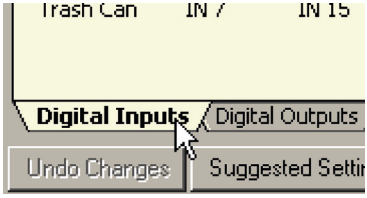

3. Drag the **Low** icon onto the **IN1** icon IN1. This will setup IN1 to respond to a low input

.

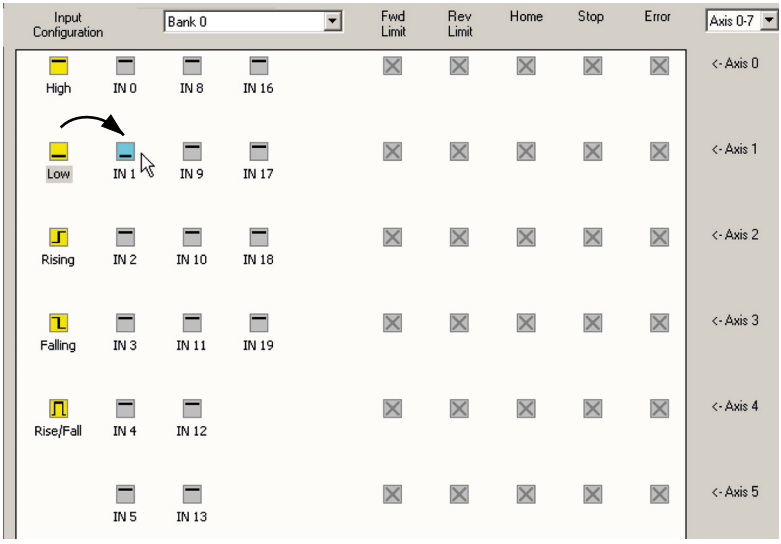

4. Now drag the **IN1** icon

onto the **Fwd Limit** icon

.

   This will setup IN1 as the Forward Limit input of axis 0.

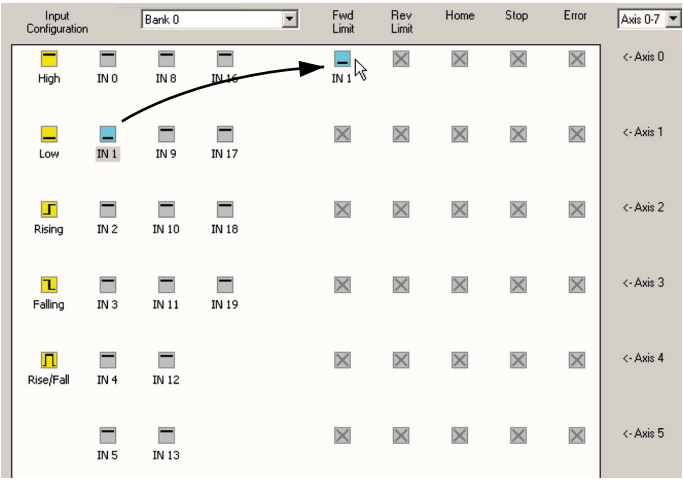

5. Click **Apply** to send the changes to the NextMove *e*100.

   Note: If required, multiple inputs can be configured before clicking **Apply**.

5.10.2 Digital output configuration

The Digital Outputs tab allows you to define how each digital output will operate and if it is to be configured as a drive enable output (see section 5.4.5). Remember to click **Apply** to send the changes to the NextMove *e*100.

6.1 Introduction

This section explains common problems that may be encountered, together with possible solutions. If you want to know the meaning of the LED indicators, see section 6.2.

6.1.1 Problem diagnosis

If you have followed all the instructions in this manual in sequence, you should have few problems installing the NextMove *e*100. If you do have a problem, read this section first.
In Mint WorkBench, use the Error Log tool to view recent errors and then check the help file.
If you cannot solve the problem or the problem persists, the SupportMe feature can be used.

6.1.2 SupportMe feature

The SupportMe feature is available from the Help menu or by clicking the button on the motion toolbar. SupportMe can be used to gather information which can then be e-mailed, saved as a text file, or copied to another application. The PC must have e-mail facilities to use the e-mail feature. If you prefer to contact technical support by telephone or fax, contact details are provided at the front of this manual. Please have the following information ready:

- The serial number of your NextMove *e*100 (if known).
- Use the Help, SupportMe menu item in Mint WorkBench to view details about your system.
- The type of servo amplifier and motor that you are using.
- A clear description of what you are trying to do, for example performing fine-tuning.
- A clear description of the symptoms that you can observe, for example the Status LED, error messages displayed in Mint WorkBench, or errors reported by the Mint error keywords `ERRORREADCODE` or `ERRORREADNEXT`.
- The type of motion generated in the motor shaft.
- Give a list of any parameters that you have setup, for example the gain settings you have entered.

6.2 NextMove *e*100 indicators

6.2.1 STATUS LED

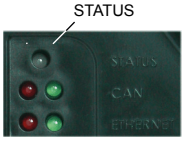

The STATUS LED displays the overall condition of the NextMove *e*100. Further details about error codes can be found in the Mint WorkBench help file. Press F1 and locate the *Error Handling* book.

	Solid green: Initialization OK, controller enabled (normal operation).
	Flickering green (very fast flashing): Firmware download in progress.
	Solid red: Initialization in progress.
	Flashing red: Initialization error. The NextMove *e*100 has detected a serious hardware or firmware error and cannot be used. Contact ABB.

6.2.2 CAN LEDs

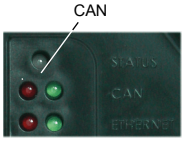

The CAN LEDs display the overall condition of the CANopen interface once the startup sequence has completed. The LED codes conform to the CAN in Automation (CiA) DR303_3 indicator standard. The green LED indicates the state of the node's internal CANopen 'state machine'. The red LED indicates the state of the physical CANopen bus.

Green (run)	
	Off: Node initializing or not powered.
	1 flash: Node in STOPPED state. 3 flashes: Software is being downloaded to the node. Continuous flashing: Node in PRE-OPERATIONAL state. Flickering (very fast flashing): Auto-baudrate detection or LSS services in progress; flickers alternately with red LED.
	Continuously illuminated, not flashing: Node in OPERATIONAL state.

Red (error)	
	Off: The node is working correctly.
	1 flash: Warning - too many error frames. 2 flashes: Guard event or heartbeat event has occurred. 3 flashes: The SYNC message has not been received within the timeout period. Flickering (very fast flashing): Auto-baudrate detection or LSS services in progress; flickers alternately with green LED.
	Continuously illuminated, not flashing: The node's CAN controller is in the BUS OFF state, preventing it from taking part in any CANopen communication.

6.2.3 ETHERNET LEDs

The ETHERNET LEDs display the overall condition of the Ethernet interface once the startup sequence has completed. The LED codes conform to the Ethernet POWERLINK Standardization Group (EPSG) standard at the time of production.

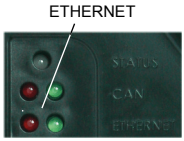

Green (status)	
	Off: Node in NOT ACTIVE state. If the NextMove *e*100 is the manager node, it is checking there is no other EPL manager node already operating. If the NextMove *e*100 is a controlled node, it is waiting to be triggered by the manager node.
	1 flash: Node in PRE-OPERATIONAL1 state. EPL mode is starting. 2 flashes: Node in PRE-OPERATIONAL2 state. EPL mode is starting. 3 flashes: Node in READY TO OPERATE state. The manager node is starting to transmit to controlled nodes that are ready. A controlled node is signalling its readiness to operate. Blinking (continuous flashing): Node in STOPPED state. A controlled node has been deactivated. Flickering (very fast flashing): Node in BASIC ETHERNET state (EPL is not operating, but other Ethernet protocols may be used).
	Continuously illuminated, not flashing: Node in OPERATIONAL state. EPL is operating normally.

Red (error)	
	Off: EPL is working correctly.
	Continuously illuminated: An error has occurred.

6.2.4 Communication

If the problem is not listed below please contact technical support.

Status LED is off:

- Check that the 24 V DC control circuit supply is connected correctly to connector X1 and is switched on.

Mint WorkBench fails to detect the detect NextMove *e*100:

- Ensure that the NextMove *e*100 is powered and the Status LED is illuminated (see section 6.2).
- Check that the Ethernet or USB cable is connected between the PC and NextMove *e*100.
- For serial connections, check that the serial cable is wired correctly and properly connected. Check that no other application, for example a mouse driver or other serial device is attempting to use the same serial port. If the "Only scan COMx" option is selected in Mint WorkBench, check that the correct COM port is selected. Check that the selected baud rate is supported by the PC and NextMove *e*100.
- For USB connections, check that the cable is properly connected. Check the USB connector socket pins for damage or sticking. Check that the USB device driver has been installed; a 'USB Motion Controller' device should be listed in Windows Device Manager.
- For Ethernet connections, check that the node ID is not set to 240 (hex F0). Check that the PC's Ethernet port has been correctly configured for TCP/IP operation (see section 5.1.7).
- In the "Search up to Node*xx*" option in Mint WorkBench's Select Controller dialog, check that the NextMove *e*100's node ID for the bus is not higher than this value, or search up to a greater node ID.

Cannot communicate with the controller:

- Verify that Mint WorkBench is loaded and that NextMove *e*100 is the currently selected controller.

Cannot communicate with the controller after downloading firmware:

- After firmware download, always power cycle the controller (remove 24 V power and then reconnect).

6.2.5 Motor control

Controller appears to be working but will not cause motor to turn:

- Check that the connections between motor and drive are correct. Use Mint WorkBench to perform the basic system tests (see section 5.6 or 5.5).
- Confirm that the drive enable output has been configured (see section 5.4.5).
- Ensure that while the NextMove *e*100 is not in error the drive is enabled and working. When the NextMove *e*100 is first powered up the drive should be disabled if there is no program running (there is often an LED on the front of the drive to indicate status).
- *(Local servo outputs only)* Check that the servo loop gains are setup correctly - check the Fine-tuning window. See sections 5.6.2 to 5.9.

Motor runs uncontrollably when controller is switched on:

- Verify that the NextMove *e*100 and drive are correctly grounded to a common ground.
- *(Local servo outputs only)* Check that the correct encoder feedback signal is connected to the encoder input, the encoder has power (if required, see sections 4.4.1 and 7.1.8) and is functioning correctly.
- Check that the drive is connected correctly to the NextMove *e*100 and that with zero demand there is 0 V at the drive's demand input. See section 5.6.1.

Motor runs uncontrollably when controller is switched on and servo loop gains are applied or when a move is set in progress. Motor then stops after a short time:

- *(Local servo outputs only)* Check that the encoder feedback signal(s) are connected to the correct encoder input(s). Check the demand to the drive is connected with the correct polarity.
- Check that for a positive demand signal, a positive increase in axis position is seen. The `ENCODERMODE` keyword can be used to change encoder input direction. The `DACMODE` keyword can be used to reverse DAC output polarity.
- Check that the maximum following error is set to a reasonable value. For configuration purposes, following error detection may be disabled by setting `FOLERRORMODE=0`.

Motor is under control, but vibrates or overshoots during a move.

- *(Local servo outputs only)* Servo loop gains may be set incorrectly. See sections 5.6.2 to 5.9.

Motor is under control, but when moved to a position and then back to the start it does not return to the same position:

- Verify that the NextMove *e*100 and drive are correctly grounded to a common ground point.
- *(Local servo outputs only)* Check:
  - all encoder channels are free from electrical noise;
  - they are correctly wired to the controller;
  - when the motor turns, the two square wave signals are approximately 90 degrees out of phase. Also check the complement signals.
- Ensure that the encoder cable uses shielded twisted pair cable, with the outer shield connected at both ends and the inner shields connected only at the NextMove *e*100 end.
- *(Local stepper outputs only)* The motor is not maintaining synchronization with the NextMove *e*100 drive output signals due to excessive acceleration, speed or load demands on the motor.
- Check that the acceleration, speed and load are within the capabilities of the motor.

6.2.6 Mint WorkBench

The Spy window does not update:

- The system refresh has been disabled. Go to the Tools, Options menu item, select the System tab and then choose a System Refresh Rate (500 ms is recommended).

Firmware download fails:

- Confirm that you have the correct version of firmware. Obtain the latest version of firmware from www.abbmotion.com.

Cannot communicate with the controller after downloading firmware:

- After firmware download, always power cycle the controller (remove 24 V power and then reconnect).

Mint WorkBench loses contact with NextMove *e*100 while connected using USB:

- Check that the NextMove *e*100 is powered.
- Check that a ‘USB Motion Controller’ device is listed in Windows Device Manager. If not, there could be a problem with the PC’s USB interface.

6.2.7 Ethernet

Cannot connect to the controller over TCP/IP:

- Check that there is not an EPL manager node (for example NextMove *e*100 with node ID 240) on the network. If there is a manager node on the network, then an EPL compatible router must be used to allow TCP/IP communication on the EPL network.
- Check that the PC's Ethernet adapter has been correctly configured, as described in section 5.1.7.

The Ethernet POWERLINK network does not seem to be operating correctly:

- Confirm that only one device on the network is set to be the Ethernet POWERLINK manager node (node ID 240, selector switches LO = F, HI = 0).
- Confirm that the reference source on all controlled nodes has been set to EPL in the Mint WorkBench Operating Mode Wizard, and that the manager node has been configured correctly. For a NextMove *e*100 manager node, this requires the System Configuration Wizard to be used in Mint WorkBench.
- Confirm that each device on the network has a different node ID.
- Confirm that there are no more than 10 'daisy-chained' devices on each branch of the network.

6.2.8 CANopen

The CANopen bus is 'passive':

This means that the internal CAN controller in the NextMove *e*100 is experiencing a number of Tx and/or Rx errors, greater than the passive threshold of 127. Check:

- 12-24 V is being applied between pin 9 (+24 V) and pin 6 or 3 (0 V) of the CAN connector, to power the opto-isolators.
- There is at least one other CANopen node in the network.
- The network is terminated *only* at the ends, not at intermediate nodes.
- All nodes on the network are running at the same baud rate.
- All nodes have been assigned a unique node ID.
- The integrity of the CAN cables.

The NextMove *e*100 should recover from the 'passive' state once the problem has been rectified (this may take several seconds).

The CANopen bus is 'off':

This means that the internal CAN controller in the NextMove *e*100 has experienced a fatal number of Tx and/or Rx errors, greater than the off threshold of 255. At this point the node will have switched itself to a state whereby it cannot influence the bus. Check:

- 12-24 V is being applied between pin 9 (+24 V) and pin 6 or 3 (0 V) of the CAN connector, to power the opto-isolators.
- There is at least one other CANopen node in the network.
- The network is terminated *only* at the ends, not at intermediate nodes.
- All nodes on the network are running at the same baud rate.
- All nodes have been assigned a unique node ID.
- The integrity of the CAN cables.

To recover from the 'off' state, the source of the errors must be removed and bus then reset. This can be done using the Mint `BUSRESET` keyword, or by resetting the NextMove *e*100.

The Manager node cannot scan/recognize a node on the network using the Mint `NODESCAN` keyword:
Assuming that the network is working correctly (see previous symptoms) and the bus is in an 'Operational' state, check:

- Only nodes that conform to DS401, DS403 and other ABB CANopen nodes are recognized by the Mint `NODESCAN` keyword. Other types of node will be identified with a type "unknown" (255) when using the Mint `NODETYPE` keyword.
- Check that the node in question has been assigned a unique node ID.
- The node must support the node guarding process. NextMove *e*100 does not support the Heartbeat process.
- Try power-cycling the node in question.

If the node in question does not conform to DS401 or DS403 and is not a ABB CANopen node, communication is still possible using a set of general purpose Mint keywords. See the Mint help file for further details.

The node has been successfully scanned / recognized by the Manager node, but communication is still not possible:
For communication to be allowed, a connection must be made to a node after it has been scanned:

- ABB controller nodes are automatically connected to after being scanned.
- Nodes that conform to DS401, DS403 must have the connections made manually using the Mint `CONNECT` keyword.

If a connection attempt using `CONNECT` fails then it may be because the node being connected to does not support an object which needs to be accessed in order to setup the connection.

7.1 Introduction

This section provides technical specifications of the NextMove *e*100.

7.1.1 Input power

Description	**Value**
Input power	
Nominal input voltage	24 V DC (±20%)
Power consumption	50 W (2 A @24 V)

7.1.2 Analog inputs

Description	**Unit**	**Value**
Type		Differential
Common mode voltage range	**V DC**	±10
Input impedance	**kΩ**	120
Input ADC resolution	**bits**	12 (includes sign bit)
Equivalent resolution (±10 V input)	**mV**	±4.9
Sampling interval	**µs**	500 (both inputs enabled) 250 (one input disabled)

7.1.3 Analog outputs

Description	**Unit**	**Value**
Type		Bipolar
Output voltage range	**V DC**	±10
Output current (per output)	**mA**	2.5
Output DAC resolution	**bits**	12
Equivalent resolution	**mV**	±4.9
Update interval	**ms**	1

7.1.4 Digital inputs

Description	**Unit**	**Value**
Type		Opto-isolated
USR V+ supply voltage Nominal Minimum Maximum	**V DC**	 24 12 30
Input voltage Active Inactive	**V DC**	 > 12 < 2
Input current (maximum per input, USR V+ = 24 V)	**mA**	7
Sampling interval	**ms**	1

7.1.5 Digital outputs

Description	**Unit**	**Value**	
USR V+ supply voltage Nominal Minimum Maximum	**V DC**		
Output curren Max. source per output, one output on Max. source per output, all outputs on Maximum total output current	**mA**	DOUT0-7 350 62.5 500	DOUT8-11 350 125 500
Update interval (Mint)		Immediate	
Switching time No load on output With 7 mA or greater load		 100 ms 10 µs	

7.1.6 Relay output

All models	**Unit**	**All models**
Contact rating (resistive)		1 A @ 24 V DC or 0.25 A @ 30 V AC
Operating time (max)	**ms**	5

7.1.7 Stepper control outputs

Description	Unit	NXE100-16xxDx	NXE100-16xxSx
Output type		RS422 differential outputs	Darlington step (pulse) and direction
Maximum output frequency		5 MHz	500 kHz
Output current		20 µA (typical)	50 mA (maximum sink, per output)

7.1.8 Encoder inputs

Description	Unit	Value
Encoder input		RS422 A/B Differential, Z index
Maximum input frequency quadrature	**MHz**	20
Output power supply to encoders		5 V (±5%) 500 mA (maximum total for all axes)
Maximum allowable cable length		30.5 m (100 ft)

7.1.9 Serial port

	Unit	All models
Signal		RS232 or RS485/422 non-isolated
Bit rates	**baud**	9600, 19200, 38400, 57600 (default), 115200

7.1.10 Ethernet interface

Description	Unit	Value
Signal		2 twisted pairs, magnetically isolated
Protocols		Ethernet POWERLINK & TCP/IP
Bit rates	**Mbit/s**	100

7.1.11 CAN interface

Description	Unit	Value
Signal		2-wire, isolated
Channels		1
Protocol		CANopen
Bit rates	**Kbit/s**	10, 20, 50, 100, 125, 250, 500, 1000

7.1.12 Environmental

Description	Unit		
Operating temperature range		**Min**	**Max**
	°C **°F**	0 +32	+45 +113
Maximum humidity	**%**	80% for temperatures up to 31 °C (87 °F) decreasingly linearly to 50% relative humidity at 45 °C (113 °F), non-condensing	
Maximum installation altitude (above m.s.l.)	**m** **ft**	2000 6560	
Shock		10 G according to IEC 60068-2-6/27 or equivalent	
Vibration		1 G, 10-150 Hz according to IEC 60068-2-6/27 or equivalent	

See also section 3.1.1.

7.1.13 Weights and dimensions

Description	Value
Weight	Approximately 700 g (1.5 lb)
Nominal overall dimensions	250 mm x 140 mm x 40.3 mm (9.84 in x 5.51 in x 1.59 in)

A.1 Cables

A.1.1 Feedback cables

The cables listed in Table 4 connect the 'Encoder Out' signal from a drive amplifier (for example MicroFlex, FlexDrive^{II}, Flex+Drive^{II} or MintDrive^{II}), to the 'Enc0', 'Enc1' and 'Enc2' encoder input connectors on the NextMove *e*100. One cable is required for each servo axis. See section 4.4.1 for the connector pin configuration.

Cable assembly description	Part	Length	
		m	ft
Drive amplifier to NextMove *e*100 feedback cable, with 9-pin D-type male connectors at both ends	CBL015MF-E3B*	1.5	5
	CBL025MF-E3B	2.5	8.2
	CBL030MF-E3B*	3.0	10
	CBL050MF-E3B	5.0	16.4
	CBL061MF-E3B*	6.1	20
	CBL075MF-E3B	7.5	24.6
	CBL091MF-E3B*	9.1	30
	CBL100MF-E3B	10	32.8
	CBL150MF-E3B	15	49.2
	CBL152MF-E3B*	15.2	50
	CBL200MF-E3B	20	65.6
	CBL229MF-E3B*	22.9	75

* Available in North and South America only.

Table 4: Drive amplifier to NextMove *e*100 feedback cables

If you are not using a cable listed above, be sure to obtain a cable that is a shielded twisted pair 0.34 mm^2 (22 AWG) wire minimum, with an overall shield. Ideally, the cable should not exceed 30.5 m (100 ft) in length. Maximum wire-to-wire or wire-to-shield capacitance is 50 pF per 300 mm (1 ft) length, to a maximum of 5000 pF for 30.5 m (100 ft).

A.1.2 Ethernet cables

The cables listed in Table 5 connect NextMove *e*100 to other EPL nodes such as MicroFlex *e*100, additional NextMove *e*100s, or a host PC. The cables are standard CAT5e 'crossover' Ethernet cables:

Cable assembly description	Part	Length	
		m	ft
CAT5e Ethernet cable	CBL002CM-EXS	0.2	0.65
	CBL005CM-EXS	0.5	1.6
	CBL010CM-EXS	1.0	3.3
	CBL020CM-EXS	2.0	6.6
	CBL050CM-EXS	5.0	16.4
	CBL100CM-EXS	10.0	32.8

Table 5: Ethernet cables

A.1.3 24 V power supplies

A range of compact 24 V DIN rail mounting power supplies are available. The supplies include short circuit, overload, over-voltage and thermal protection.

Part	Input voltage	Output voltage	Output rating
DR-75-24	110-230 V AC	24 V DC	75 W (3.2 A)
DR-120-24			120 W (5 A)
DRP-240-24			240 W (10 A)

Table 6: 24 V power supplies

B.1 Introduction

The following table summarizes the Mint keywords supported by the NextMove *e*100. Note that due to continuous developments of the NextMove *e*100 and the Mint language, this list is subject to change. Check the latest Mint help file for full details of new or changed keywords.

B.1.1 Keyword listing

Keyword	Description
ABORT	To abort motion on all axes.
ABORTMODE	To control the default action taken in the event of an abort.
ACCEL	To define the acceleration rate of an axis.
ACCELDEMAND	To read the instantaneous demand acceleration.
ACCELJERK	To define the jerk rate to be used during periods of acceleration.
ACCELJERKTIME	To define the jerk rate to be used during periods of acceleration.
ACCELSCALEFACTOR	To scale axis encoder counts, or steps, into user defined acceleration units.
ACCELSCALEUNITS	To define a text description for the acceleration scale factor.
ACCELTIME	To define the acceleration rate of an axis.
ADC	To read an analog input value.
ADCGAIN	To set the gain to be applied to an ADC input.
ADCMAX	Sets the upper analog limit value for the specified analog input.
ADCMIN	Sets the lower analog limit value for the specified analog input.
ADCMODE	To set the analog input mode.
ADCOFFSET	To set the offset to be applied to an ADC input.
ADCTIMECONSTANT	To set the time constant of the low pass filter applied to an ADC input.
AXISBUS	To read the fieldbus used to host this axis.
AXISDAC	To read the DAC channel used to control the specified axis.
AXISMODE	To return the current mode of motion.

Keyword	Description
AXISNODE	To read the node number used to host the axis.
AXISPDOUTPUT	To read the stepper pulse/direction output channel used to control the specified axis.
AXISPOSENCODER	To select the source of the position signal used in dual encoder feedback systems.
AXISREMOTECHANNEL	To read the remote channel number on the node used to host the axis.
AXISSTATUSWORD	To read the DS 402 status word for an axis.
AXISSYNCDELAY	To allow synchronization of local and remote axes.
AXISVELENCODER	To select the source of the velocity signal used in dual encoder feedback systems.
BACKLASH	To set the size of the backlash present on an axis.
BACKLASHINTERVAL	To set the rate at which backlash compensation is applied.
BACKLASHMODE	Controls the use of backlash compensation.
BUSBAUD	To specify the bus baud rate.
BUSENABLE	To enable or disable the operation of a fieldbus.
BUSEVENT	Returns the next event in the bus event queue of a specific bus.
BUSEVENTINFO	Returns the additional information associated with a bus event.
BUSNODE	To set or read the node ID used for the specified bus.
BUSPROTOCOL	To read the protocol currently supported on a particular fieldbus.
BUSRESET	Resets the bus controller.
BUSSTATE	Returns the status of the bus controller.
CAM	Perform a cam profile.
CAMAMPLITUDE	To modify the amplitude of a cam profile.
CAMBOX	To start or stop a CAMBox channel.
CAMBOXDATA	To load data associated with a CAMBox channel.
CAMEND	To define an end point in the cam table if multiple cams are required.
CAMINDEX	Returns the currently executing cam segment number.
CAMPHASE	Allows a cam profile to be shifted forwards or backwards over a fixed number of cam segments.
CAMPHASESTATUS	To get the state of the CAMPHASE for a specific axis.
CAMSEGMENT	To change CAM table data.
CAMSTART	To define a start point in the cam table if multiple cams are required.

Keyword	Description
CAMTABLE	To specify the array names to be used in a cam profile on the specified axis.
CANCEL	To stop motion and clear errors on an axis.
CANCELALL	To stop motion and clear errors on all axes.
CAPTUREBUFFERSIZE	To read the total size of the capture buffer.
CAPTURECOMMAND	To control the operation of capture.
CAPTUREDURATION	To define the total duration of the data capture.
CAPTUREMODE	To set or read the mode on a capture channel.
CAPTUREMODEPARAMETER	To specify a parameter associated with CAPTUREMODE.
CAPTURENUMPOINTS	To read the number of captured points per channel.
CAPTUREPERIOD	To define the interval between data captures.
CAPTUREPOINT	To allow individual capture values to be read.
CAPTUREPRETRIGGER-DURATION	To set the duration of the pre-trigger phase.
CAPTUREPROGRESS	To return the progress of the pre-trigger or post-trigger capture phase.
CAPTURESTATUS	To return the progress of the capture.
CAPTURETRIGGER	To generate a capture trigger.
CAPTURETRIGGERABSOLUTE	To ignore the sign of the trigger value when triggering from a capture channel source.
CAPTURETRIGGERCHANNEL	To set the channel to be used as the reference source for triggering.
CAPTURETRIGGERMODE	To set the method used to evaluate the trigger source.
CAPTURETRIGGERSOURCE	To set the reference source to be used for triggering.
CAPTURETRIGGERVALUE	To set the trigger value when triggering from a capture channel source.
CIRCLEA	To perform a circular move with absolute co-ordinates.
CIRCLER	To perform a circular move with relative co-ordinates.
CLEARERRORLOG	To clear the error log.
COMMS	Accesses the reserved comms array.
COMMSINTEGER	To access the reserved comms array, storing values as integers.
COMMSMODE	Selects comms use over either RS485 or CANopen.
COMPAREENABLE	Enables/disables the position compare control of a specific digital output.
COMPAREOUTPUT	To specify the digital output used for position compare.
COMPAREPOS	To write to the position compare registers.

Keyword	Description
CONFIG	To set the configuration of an axis for different control types.
CONNECT	To enable a connection between two remote nodes to be made or broken.
CONNECTSTATUS	Returns the status of the connection between this node and another node.
CONTOURMODE	To enable contouring for interpolated moves.
CONTOURPARAMETER	To set the parameters for contoured moves.
CONTROLRATE	To read the control loop and profiler sampling rates.
DAC	To write a value to the DAC or read the present DAC value.
DACLIMITMAX	To restrict the DAC output voltage to a defined range.
DACMODE	To control the use of the DAC.
DACOFFSET	Apply a voltage offset to a DAC channel.
DECEL	To set the deceleration rate on the axis.
DECELJERK	To define the jerk rate to be used during periods of deceleration.
DECELJERKTIME	To define the jerk rate to be used during periods of deceleration.
DECELTIME	To set the deceleration rate on the axis.
DEFAULT	To return axis motion variables to their power-up state.
DEFAULTALL	To return all axis motion variables to their power-up state.
DPREVENT	To interrupt the host PC and generate a trappable event, using the Dual Port RAM (DPR).
DRIVEBUSVOLTS	To return the current level of the DC bus.
DRIVEDISABLEMODE	To prevent moves in the move buffer being cleared when an axis is disabled.
DRIVEENABLE	To enable or disable the drive for the specified axis.
DRIVEENABLEOUTPUT	To specify an output as a drive enable.
DRIVEOVERLOADAREA	To read the extent of a drive overload condition.
ENCODER	To set or read the axis encoder value.
ENCODERMODE	To make miscellaneous changes to the encoders.
ENCODERPRESCALE	To scale down the encoder input.
ENCODERSCALE	To set or read the scale factor for the encoder channel.
ENCODERVEL	To read the velocity from an encoder channel.
ENCODERWRAP	To set or read the encoder wrap range for the encoder channel.

Keyword	Description
ENCODERZLATCH	To get and reset the state of an axis' encoder Z latch.
ERRCODE	To return the last error code read from the error list.
ERRDATA	To return data associated with the last error read from the error list.
ERRLINE	To return the line number of the last error read from the error list.
ERRORCLEAR	To clear all errors in the specified group.
ERRORCODEENABLE	To allow or prevent specific errors to be created.
ERRORDECEL	To set the deceleration rate on the axis for powered stops, in the event of an error or stop input.
ERRORINPUT	To set or return the digital input to be used as the error input for the specified axis.
ERRORINPUTMODE	To control the default action taken in the event of an external error input.
ERRORPRESENT	To determine if errors in a particular group are present in the error list.
ERRORREADCODE	To determine if a particular error is present in the error list.
ERRORREADNEXT	To return the next entry in the specified group from the error list.
ERRORSWITCH	To return the state of the error input.
ERRSTRING	To return the error string for the last error code read from the error list.
ERRTIME	To return the time stamp for the last error code read from the error list.
EVENTACTIVE	Indicates whether an event is currently active.
EVENTDISABLE	To selectively enable and disable Mint events.
EVENTPEND	To manually cause an event to occur.
EVENTPENDING	To indicate whether an event is currently pending.
FACTORYDEFAULTS	To reset parameter table entries to their default values.
FEEDRATE	To set the slew speed of an individual move loaded in the move buffer.
FEEDRATEMODE	To control the use of slew speed, acceleration, deceleration and feedrate override.
FEEDRATEOVERRIDE	Overrides the current speed or feedrate being used.
FEEDRATEPARAMETER	To set the parameters for the current speed or feedrate being used.
FIRMWARERELEASE	To read the release number of the firmware.

Keyword	Description
FLY	To create a flying shear by following a master axis with controlled acceleration and deceleration.
FOLERROR	To return the instantaneous following error value.
FOLERRORFATAL	To set the maximum permissible following error before an error is generated.
FOLERRORMODE	To determine the action taken on the axis in the event of a following error.
FOLERRORWARNING	Sets the following error threshold before an axis warning is generated.
FOLLOW	To enable encoder following with a specified gear ratio.
FOLLOWMODE	To define the mode of operation of the FOLLOW keyword.
FREQ	To set a constant frequency output.
GEARING	To set the percentage size for gearing compensation.
GEARINGMODE	To turn gearing compensation on or off.
GLOBALERROROUTPUT	Allows the user to specify a global error output which will be deactivated in the event of an error.
GO	To begin synchronized motion.
HALL	To read the current Hall state on feedback devices which use Hall sensors.
HELIXA	To load a helix move with absolute co-ordinates into the move buffer.
HELIXR	To load a helix move with relative co-ordinates into the move buffer.
HOME	To find the home position on an axis.
HOMEACCEL	To set the acceleration rate for the homing profile.
HOMEBACKOFF	To set the home back-off speed factor.
HOMECREEPSPEED	To set the creep speed for homing moves.
HOMEDECEL	To set the deceleration rate for the homing profile.
HOMEINPUT	To set a digital input to be the home switch input for the specified axis.
HOMEPHASE	To find the phase of the homing sequence currently in progress.
HOMEPOS	To read the axis position at the completion of the homing sequence.
HOMESPEED	To set the speed for the initial seek phase of the homing sequence.
HOMESTATUS	To set or read the status of a homing sequence.
HOMESWITCH	To return the state of the home input.

Keyword	Description
HTA	Starts the hold to analog mode of motion.
HTACHANNEL	To specify the analog input to use for a particular axis while in Hold To Analog (HTA) mode.
HTADAMPING	Specifies the damping term used in the Hold To Analog (HTA) algorithm.
HTADEADBAND	Specifies the analog error deadband.
HTAFILTER	Sets the filter factor for the analog input.
HTAKINT	Specifies the integral gain term used in the Hold To Analog (HTA) force loop.
HTAKPROP	Specifies the proportional gain term used in the Hold To Analog (HTA) force loop.
IDLE	Indicates if a move has finished executing and the axis has finished moving.
IDLEMODE	To control the checks performed when determining if an axis idle.
IDLEPOS	Reads or sets the idle following error limit.
IDLESETTLINGTIME	To read the time taken for an axis to become idle.
IDLETIME	To specify the period for which the axis must meet its idle conditions before becoming idle.
IDLEVEL	Reads or sets the idle velocity limit.
IMASK	To mask off Mint events IN0 .. INx.
IN	To read the state of all the inputs on an input bank.
INCA	To set up an incremental move to an absolute position.
INCR	To set up an incremental move to a relative position.
INPUTACTIVELEVEL	To set the active level on the digital inputs.
INPUTDEBOUNCE	To set or return the number of samples used to ‘debounce’ a digital input bank.
INPUTMODE	To set or return the sum of a bit pattern describing which of the user digital inputs should be edge or level triggered.
INPUTNEGTRIGGER	To set or return the user inputs that become active on negative edges.
INPUTPOSTRIGGER	To set or return the user inputs that become active on positive edges.
INSTATE	To read the state of all digital inputs.
INSTATEX	To read the state of an individual digital input.
INX	To read the state of an individual digital input.
JOG	To set an axis for speed control.
KACCEL	To set the servo loop acceleration feed forward gain.

Keyword	Description
KDERIV	To set the servo loop derivative gain on the servo axes.
KINT	To set the servo loop integral gain.
KINTLIMIT	To restrict the overall effect of the integral gain KINT.
KINTMODE	To control when integral action will be applied in the servo loop.
KNIFE	Loads a tangential knife move on the specified axis.
KNIFEAXIS	Specifies the master axis that the knife axis should follow.
KNIFEMODE	Specifies the knife mode with which moves on the knife master axis are loaded.
KNIFESTATUS	To read or set the status of the knife axis.
KPROP	To set the proportional gain for the position controller.
KVEL	To set the servo loop velocity feedback gain term.
KVELFF	To set the velocity feedforward term for the position controller.
LATCH	To read the state of a fast latch channel.
LATCHENABLE	To manually re-enable a fast latch channel.
LATCHINHIBITTIME	To specify a period during which further fast triggers will be ignored.
LATCHINHIBITVALUE	To specify a range of values within which further fast triggers will be ignored.
LATCHMODE	To set the default action to be taken to clear a fast latch.
LATCHSOURCE	To define the source of data to be latched by a fast latch channel.
LATCHSOURCECHANNEL	To define the channel of the source of data to be latched by a fast latch channel.
LATCHTRIGGERCHANNEL	To select which of the fast latch inputs (or outputs) will trigger a fast latch channel.
LATCHTRIGGEREDGE	To define which edge polarity should cause the fast latch to be triggered.
LATCHTRIGGERMODE	To select whether a fast latch is triggered by a digital input, a digital output, or an encoder Z pulse.
LATCHVALUE	To return the instantaneous latch value that was recorded by a fast latch.
LIFETIME	To return a lifetime counter for the drive.
LIMIT	To return the state of the forward and reverse limit switch inputs for the given axis.
LIMITFORWARD	To return the state of the forward limit switch input for the given axis.

Keyword	Description
LIMITFORWARDINPUT	To set the user digital input configured to be the forward end of travel limit switch input for the specified axis.
LIMITMODE	To control the default action taken in the event of a forward or reverse hardware limit switch input becoming active.
LIMITREVERSE	To return the state of the reverse limit switch input for the given axis.
LIMITREVERSEINPUT	To set the user digital input configured to be the reverse end of travel limit switch input for the specified axis.
MASTERCHANNEL	To set or read the channel of the input device used for gearing.
MASTERDISTANCE	To set the distance on the master axis over which the slave will travel for a 'segment' in master-slave move types.
MASTERSOURCE	To set or read the source of the input device used for gearing.
MOTOROVERLOADAREA	To read the extent of an overload condition.
MOVEA	To set up a positional move to an absolute position.
MOVEBUFFERBACKUP	To save or restore an axis move buffer.
MOVEBUFFERFREE	To return the number of free spaces in the move buffer for the specified axis.
MOVEBUFFERID	To attach or read back a 16-bit identifier from the move buffer.
MOVEBUFFERIDLAST	To read a 16-bit identifier from the move buffer.
MOVEBUFFERLOW	To set or return the number of free spaces in the move buffer before a move buffer low event is generated.
MOVEBUFFERSIZE	To set or return the size of the move buffer allocated on the specified axis.
MOVEBUFFERSTATUS	To return information about the move buffer.
MOVEDWELL	To load a dwell move into the move buffer.
MOVEOUT	To load a digital output bit pattern into the move buffer.
MOVEOUTX	To load a change of state for a specific digital output into the move buffer.
MOVEPULSEOUTX	To load a pulsed change of state for a specific digital output into the move buffer.
MOVER	To set up a positional move to a relative position.
MOVESTATUS	To return information about the progress of the current move.

Keyword	Description
NETFLOAT	To access a controller's network data array, storing values in floating-point format.
NETINTEGER	To access a controller's network data array, storing values as integers.
NODELIVE	To determine if a CAN node on the bus is currently live or dead.
NODESCAN	To scan a specific CAN bus for the presence of a specific node.
NODETYPE	To add or remove a CAN node to/from the CAN network. Can also be read to determine the node type.
NUMBEROF	To return information about the abilities of the controller.
NVFLOAT	To read or write a floating point value in non-volatile memory.
NVLONG	To read or write a long integer value in non-volatile memory.
NVRAMDEFAULT	Clears the contents of non-volatile RAM (NVRAM).
OFFSET	To perform a positional offset move.
OFFSETMODE	Define the mode of operation on the OFFSET keyword.
OFFSETSPEEDLIMIT	To set the maximum speed limit of an axis during an offset move.
OUT	To set or read the state of all the outputs on an output bank.
OUTPUTACTIVELEVEL	To set the active level on the digital outputs.
OUTX	To set or read an individual digital output.
PLATFORM	To return the platform type.
POS	To set or read the current axis position.
POSDEMAND	To set or read the instantaneous position demand.
POSREF	To read the position reference value for an axis.
POSREMAINING	To indicate the remaining move distance.
POSREMAININGPATH	To indicate the remaining move distance along the path of a multi-axis move.
POSROLLOVER	To count the number of wraps of the axis position value.
POSSCALEFACTOR	To scale axis encoder counts, or steps, into user defined position units.
POSSCALEUNITS	To define a text description for the position scale factor.
POSTARGET	Reads the target position of the current positional move.
POSTARGETLAST	Reads the target position of the last move in the move buffer.

Keyword	Description
PRECISIONAXIS	To set or read the axis associated with a particular precision channel.
PRECISIONINCREMENT	Sets or reads the theoretical distance between each of the values in the leadscrew compensation tables.
PRECISIONMODE	Controls the action of leadscrew compensation.
PRECISIONOFFSET	Sets the distance between the start of the leadscrew and axis zero position.
PRECISIONSOURCE	To set or read the type of source used as the master reference.
PRECISIONSOURCECHANNEL	To set or read the axis, encoder or stepper used as the master reference.
PRECISIONTABLE	Loads the leadscrew compensation tables.
PRODUCTPOWERCYCLES	To return the number of times the controller has been power cycled.
PRODUCTSERIALNUMBER	To return the serial number of the controller.
PROFILEMODE	To select the type of velocity profiler to use.
PULSEOUTX	To activate a digital output for a specified number of milliseconds.
REMOTEADC	To read the value of a remote analog input (ADC).
REMOTEADCDELTA	To control the rate of change on a remote analog input before a REMOTEADC message is sent.
REMOTECOMMS	To access the reserved comms array on another controller.
REMOTECOMMSINTEGER	To access the reserved comms array on another controller, storing values as integers.
REMOTEDAC	To control the value of a remote analog output channel (DAC).
REMOTEEMERGENCY-MESSAGE	Returns the error code from the last emergency message received from a particular CANopen node.
REMOTEENCODER	To read the value of a remote encoder channel.
REMOTEERROR	Reads the CANopen error register information reported within the last emergency message received from a specific node.
REMOTEIN	To read the state of all the digital inputs on a remote CAN node.
REMOTEINBANK	To read the state of a bank of digital inputs on a remote CAN node.
REMOTEINX	To read the state of individual digital inputs from a remote CAN node.

Keyword	Description
REMOTEMODE	To control the update mode for a remote node.
REMOTEOBJECT	To access the Object Dictionary of any CANopen node present on the network.
REMOTEOBJECTFLOAT	To access ‘floating-point’ entries in the Object Dictionary of a remote node present on the network.
REMOTEOBJECTSTRING	To access ‘Vis-String’ entries in the Object Dictionary of any CANopen node present on the network.
REMOTEOUT	To control the state of digital outputs on a remote CAN node.
REMOTEOUTBANK	To read the state of a bank of digital outputs on a remote CAN node.
REMOTEOUTX	To control the state of individual digital outputs on a remote CAN node.
REMOTEPDOIN	To request data from a node in the form of a PDO message.
REMOTEPDOOUT	To force a controller node to transmit a variable length PDO message with a specific COB-ID. The PDO will contain up to 64 bits of data that can be passed in the form of two 32-bit values.
REMOTEPDOVALID	To read the status of the PDO (process data object) data for a node.
REMOTESTATUS	To set or read the status register on a remote CAN node.
SCALEFACTOR	To scale axis encoder counts, or steps, into user defined units.
SENTINELACTION	To control the action of a sentinel channel.
SENTINELACTIONMODE	To control how the action of a sentinel channel is performed.
SENTINELACTIONPARAMETER	To specify a parameter to fully define the sentinel action.
SENTINELPERIOD	To control the time interval between sentinel samples.
SENTINELSOURCE	To set or read the primary source used by a sentinel channel.
SENTINELSOURCE2	To set or read the secondary source used by a sentinel channel.
SENTINELSOURCE-PARAMETER	To set or read the parameter used to qualify the primary sentinel source.
SENTINELSOURCE2-PARAMETER	To set or read the parameter used to qualify the secondary sentinel source.
SENTINELSTATE	To read the current state of a sentinel channel.
SENTINELTRIGGERABSOLUTE	To set or read the ‘absolute’ parameter used by a sentinel channel.

Keyword	Description
SENTINELTRIGGERMODE	To set or read the mode used by a sentinel channel.
SENTINELTRIGGERVALUE-FLOAT	To specify the ‘lowVal’ or ‘highVal’ parameter, as a floating-point number, to be used in a sentinel channel’s trigger criteria.
SENTINELTRIGGERVALUE-INTEGER	To specify the ‘lowVal’ or ‘highVal’ parameter, as an integer number, to be used in a sentinel channel’s trigger criteria.
SERIALBAUD	To set the baud rate of the RS232 / RS485/422 port.
SEXTANT	To set the baud rate of the RS232 / RS485/422 port.
SOFTLIMITFORWARD	To set the forward software limit position on a specified axis.
SOFTLIMITMODE	To set or read the default action taken if a forward or reverse software limit position is exceeded.
SOFTLIMITREVERSE	To set or read the reverse software limit position on a specified axis.
SPEED	To set or read the slew speed of positional moves loaded in the move buffer.
SPLINE	To perform a spline move.
SPLINEEND	To define the end segment in the spline table for a spline move.
SPLINEINDEX	To read the currently executing spline segment number.
SPLINESEGMENT	To change spline table data.
SPLINESTART	To define the start segment in a spline table for a spline move.
SPLINESUSPENDTIME	To set the segment duration for a controlled stop during a spline move.
SPLINETABLE	To specify the array names to be used in a spline move on the specified axis.
SPLINETIME	To set the segment duration for all segments for a spline move.
STEPPER	To set or read the stepper axis value.
STEPPERDELAY	To enforce a time delay between state changes on step and direction outputs.
STEPPERIO	Manually control the step and direction pins of a stepper channel.
STEPPERMODE	To make miscellaneous changes to the stepper channels.
STEPPERSCALE	To set or read the scale factor for the stepper output channel.
STEPPERVEL	To read the velocity from a stepper output channel.

Keyword	Description
STEPPERWRAP	To set or read the stepper wrap range for a stepper output channel.
STOP	To perform a controlled stop during motion.
STOPINPUT	To set or read the digital input to be used as the stop switch input for the specified axis.
STOPMODE	To set or read the action taken when an axis is stopped.
STOPSWITCH	To return the current state of the stop input for the axis.
SUSPEND	To pause the current move.
SUSPENDINPUT	To set or read the digital input to be used as the suspend switch input for the specified axis.
SUSPENDSWITCH	To return the current state of the suspend input for the axis.
SYSTEMDEFAULTS	To reset parameter table entries to their default values and erase the Mint program, non-volatile RAM and error log.
SYSTEMSECONDS	To set or read a programmable system lifetime counter for the drive.
TERMINALDEVICE	To set or read the device type associated with a given terminal.
TERMINALMODE	To set or read handshaking modes for a terminal.
TERMINALPORT	To set or read the communication port associated with a given terminal.
TIMEREVENT	To set or read the rate of the timer event.
TORQUEDEMAND	To return the instantaneous torque demand.
TORQUELIMITNEG	To set or read the maximum negative torque limit.
TORQUELIMITPOS	To set or read the maximum positive torque limit.
TORQUEREF	To set or read a torque reference for torque (constant current) mode on a servo axis.
TORQUEREFERRORFALLTIME	To set or read the ‘deceleration ramp’ for a torque profile in the event of an error.
TORQUEREFFALLTIME	To set or read the ‘deceleration ramp’ for a torque profile.
TORQUEREFRISETIME	To set or read the ‘acceleration ramp’ for a torque profile.
TRIGGERCHANNEL	To specify the input used for triggering, when triggering on an axis source or encoder.
TRIGGERCOMPENSATION	To specify the size of the compensation term used when axis triggering on an axis/encoder position.
TRIGGERINPUT	To specify the input used for triggering, when triggering on a digital input.
TRIGGERLATCH	To specify the latch channel used for triggering, when triggering on a latch channel.

Keyword	Description
TRIGGERMODE	Controls the triggering of a move.
TRIGGERSOURCE	To specify the source when axis triggering is using an axis/encoder position.
TRIGGERVALUE	To specify an absolute value on which to trigger motion.
VECTORA	To perform an interpolated vector move on two or more axes with absolute co-ordinates.
VECTORR	To perform an interpolated vector move on two or more axes with relative co-ordinates.
VEL	To return the instantaneous axis velocity.
VELDEMAND	To read the current instantaneous demand velocity.
VELDEMANDPATH	To read the instantaneous demand velocity along the path of a multi-axis move.
VELERROR	To report the velocity following error.
VELFATAL	To set or read the threshold for the maximum difference between demand and actual velocity.
VELFATALMODE	To control the default action taken in the event of the velocity threshold being exceeded.
VELREF	To set a fixed point speed reference or read the current speed reference.
VELSCALEFACTOR	To scale axis encoder counts, or steps, into user defined velocity units.
VELSCALEUNITS	To define a text description for the velocity scale factor.

C.1 Outline

This section provides general information regarding recommended methods of installation for CE compliance. It is not intended as an exhaustive guide to good practice and wiring techniques. It is assumed that the installer of the NextMove *e*100 is sufficiently qualified to perform the task, and is aware of local regulations and requirements. A CE mark is attached to the NextMove e100 to verify that the unit follows the provisions of the European, EMC, and machinery directives.A duly signed CE declaration of conformity is available from ABB.

C.1.1 CE marking

The CE marking indicates a product's compliance with EU legislation and so enables the free movement of products within the European market. By affixing the CE marking to a product, a manufacturer declares, on his sole responsibility, that the product meets all the legal requirements for the CE marking, which means that the product can be sold throughout the European Economic Area.

However, not all products must bear the CE marking, only product categories mentioned in specific EU directives on the CE marking. The purpose of the directives is to state a minimum technical requirement common to all the member states within the European Union. In turn, these minimum technical requirements are intended to enhance the levels of safety both directly and indirectly.

C.1.2 Compliance with the EMC Directive

EU directive 2004/108/EC relating to Electro Magnetic Compliance (EMC) indicates that it is the responsibility of the system integrator to ensure that the entire system complies with all protection requirements at the time of installing into service.

Motors and controls are used as components of a system, per the EMC directive. Hence all components, installation of the components, interconnection between components, and shielding and grounding of the system as a whole determines EMC compliance.

NextMove *e*100 EMC compliance

When installed as directed in this manual, NextMove *e*100 units meet the emission and immunity limits for an "industrial" environment, as defined by the EMC directives (EN 61000-6-4 and EN 61000-6-2). To meet the more stringent emission limits of the 'residential, commercial and light industrial' environment (EN61000-6-3), the NextMove *e*100 must be mounted in a suitable metal cabinet incorporating 360° screened cable glands.

C.1.3 Use of CE compliant components

The following points should be considered:

- **Using CE approved components will not guarantee a CE compliant system!**
- The components used in the controller, installation methods used, materials selected for interconnection of components are important.
- The installation methods, interconnection materials, shielding, filtering and earthing / grounding of the system as a whole will determine CE compliance.
- The responsibility of CE mark compliance rests entirely with the party who offers the end system for sale (such as an OEM or system integrator).

C.1.4 EMC installation suggestions

To ensure electromagnetic compatibility (EMC), the following installation points should be considered to help reduce interference:

- Earthing/grounding of all system elements to a central earth/ground point (star point).
- Shielding of all cables and signal wires.

C.1.5 Wiring of shielded (screened) encoder cables

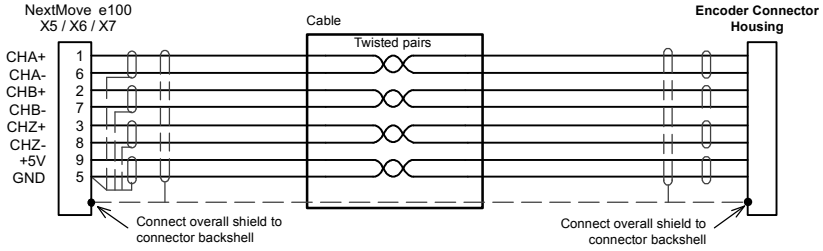

Figure 43: Encoder signal cable grounding

C.2 RoHS Compliance

NextMove *e*100 is in conformity with Directive 2011/65/EU of the European parliament and of the council of 8th June 2011 on the restriction of the use of certain hazardous substances in electrical and electronic equipment. The RoHS declaration 3AXD10000429159 is available on www.abb.com/drives.

C.3 Marks

NextMove e100 is UL listed; file NMMS.E195954.

A

Abbreviations, 2-4

Accessories, A-1

Analog I/O, 4-3
- analog inputs, 4-3
- analog outputs, 4-5

Axes, 5-13

B

Basic Installation, 3-1
- location requirements, 3-1
- mounting, 3-2

C

Calculating KVELFF, 5-33

CAN interface
- CANopen, 4-29
- connector, 4-28
- LEDs, 6-2
- opto-isolation, 4-29
- specifications, 7-4
- wiring, 4-28

Catalog number
- identifying, 2-3

CE Guidelines, C-1
- declaration of conformity, C-2

Closed loop control
- an introduction, 5-25

Command outputs See Demand outputs

Configuration
- adjusting KPROP, 5-36
- axes, 5-13
- axis for velocity control, 5-33
- calculating KVELFF, 5-33
- critically damped response, 5-32
- digital inputs, 5-39
- digital outputs, 5-40
- drive enable output - testing, 5-21
- eliminating steady-state errors, 5-38
- overdamped response, 5-31
- selecting a scale, 5-17
- selecting servo loop gains, 5-28
- servo axis - testing and tuning, 5-23
- setting the drive enable output, 5-19
- stepper axis - testing, 5-22
- underdamped response, 5-30

Connection summary, 4-31, 4-33

Connectors
- CAN, 4-28
- Ethernet, 4-27
- locations, 4-2
- serial, 4-22
- USB, 4-21

Critically damped response, 5-32

D

Demand outputs, 4-5, 5-23

Digital I/O, 4-7
- configuration, 5-39
- digital inputs, 4-7
- digital outputs, 4-12

Drive enable output
- setting, 5-19
- testing, 5-21

E

EMC conformity, B-1

Encoder
- cables, A-1
- inputs, 4-16

Environmental, 3-1, 7-4

Ethernet connector, 4-27

Ethernet interface
- cables, A-1
- connector, 4-27
- Ethernet POWERLINK, 4-26
- introduction, 4-25

LEDs, 6-3
specifications, 7-3
TCP/IP, 4-25

F

Features, 2-1
Feedback, 4-16, 7-3
cables, A-1

H

Hardware requirements, 3-3
Help file, 5-10

I

Indicators, 6-2
CAN LEDs, 6-2
ETHERNET LEDs, 6-3
STATUS LED, 6-2
Input / Output, 4-1
analog inputs, 4-3, 7-1
analog outputs, 4-5, 7-1
CAN interface, 4-28
connection summary, 4-31, 4-33
connector locations, 4-2
digital inputs, 4-7, 7-2
digital outputs, 4-12, 7-2
encoder inputs, 4-16, 7-3
Ethernet, 4-25
node ID selector switches, 4-18
relay, 4-13
serial port, 4-22
multidrop using RS485/RS422, 4-23
using RS232, 4-22
stepper control outputs, 4-14, 4-15, 7-3
USB port, 4-21
Installation
Mint Machine Center, 5-2
Mint WorkBench, 5-2
other requirements, 3-3
TCP/IP configuration, 5-4
USB driver, 5-3
Introduction to closed loop control, 5-25

K

Keyword summary, B-1

L

LED indicators
CAN LEDs, 6-2
ETHERNET LEDs, 6-3
STATUS LED, 6-2

M

Mint keyword summary, B-1
Mint Machine Center (MMC), 5-5
starting, 5-7, 5-8
Mint WorkBench, 5-9
digital input/output configuration, 5-39
help file, 5-10
starting, 5-11

N

Node ID selector switches, 4-18

O

Operation, 5-1
configuring the TCP/IP connection, 5-4
connecting to the PC, 5-1
installing Mint Machine Center, 5-2
installing Mint WorkBench, 5-2
installing the USB driver, 5-3
power on checks, 5-2
preliminary checks, 5-2
starting NextMove e100, 5-2
Operator panels
HMI operator panels, 4-24
Overdamped response, 5-31

P

Power sources, 3-3, 7-1
24 V power supplies, A-2
Precautions, 1-2
Problem diagnosis, 6-1
Profilers, 5-13

R

Receiving and Inspection, 2-3
Relay connections, 4-13
Remote axes, 5-13

RS232, 4-22
RS485, 4-22
  multidrop using RS485/RS422, 4-23
  specifications, 7-3

S

Safety Notice, 1-2
Scale
  selecting, 5-17
Serial port, 4-22
  connecting serial Baldor HMI panels, 4-24
Servo axis, 5-23
  adjusting KPROP, 5-36
  calculating KVELFF, 5-33
  eliminating steady-state errors, 5-38
  selecting gains, 5-28
  testing the demand output, 5-23
  tuning for current control, 5-28
  tuning for velocity control, 5-33
Specifications, 7-1
  analog inputs, 7-1
  analog outputs, 7-1
  CAN interface, 7-4
  digital inputs, 7-2
  digital outputs, 7-2
  encoder inputs, 7-3
  environmental, 7-4
  Ethernet interface, 7-3
  input power, 7-1
  relay output, 7-2
  serial port, 7-3
  stepper control outputs, 7-3
  weights and dimensions, 7-4
Status LED, 6-2
Stepper axis, 5-22
  control outputs, 4-14, 4-15
  testing the output, 5-22
SupportMe feature, 6-1

T

TCP/IP
  configuring, 5-4
  description, 4-25
Testing
  demand output, 5-23
  drive enable output, 5-21
  servo axis, 5-23
  stepper axis, 5-22
  stepper output, 5-22
Troubleshooting, 5-1, 6-1
  CAN LEDs, 6-2
  CANopen, 6-6
  communication, 6-4
  Ethernet, 6-6
  ETHERNET LEDs, 6-3
  Mint WorkBench, 6-5
  motor control, 6-4
  problem diagnosis, 6-1
  STATUS LED, 6-2
  SupportMe, 6-1
  TCP/IP, 6-6
Tuning *See* Configuration

U

Underdamped response, 5-30
Units and abbreviations, 2-4
USB
  installing the driver, 5-3
  port, 4-21

W

Weights and dimensions, 7-4
WorkBench *See* Mint WorkBench

If you have any suggestions for improvements to this manual, please let us know. Write your comments in the space provided below, remove this page from the manual and mail it to:

Manuals
ABB Motion Ltd
6 Hawkley Drive
Bristol
BS32 0BF
United Kingdom.

Alternatively, you can e-mail your comments to:

manuals.uk@gb.abb.com

Comment:
continued...

Thank you for taking the time to help us.

Contact us

ABB Oy
Drives
P.O. Box 184
FI-00381 HELSINKI
FINLAND
Telephone +358 10 22 11
Fax +358 10 22 22681
www.abb.com/drives

ABB Inc.
Automation Technologies
Drives & Motors
16250 West Glendale Drive
New Berlin, WI 53151
USA
Telephone 262 785-3200
1-800-HELP-365
Fax 262 780-5135
www.abb.com/drives

ABB Beijing Drive Systems Co. Ltd.
No. 1, Block D, A-10 Jiuxianqiao Beilu
Chaoyang District
Beijing, P.R. China, 100015
Telephone +86 10 5821 7788
Fax +86 10 5821 7618
www.abb.com/drives

ABB Motion Control Centre
6 Hawkley Drive
Bristol, BS32 0BF
United Kingdom
Telephone +44 (0) 1454 850000
Fax +44 (0) 1454 859001
www.abb.com/drives

LT0231A08EN EFFECTIVE: 2016-03-01

LT0231A08EN

Power and productivity
for a better world™