DUS Daten- und Steuerungstechnik GmbH
Hinterm Liesch 33 • D-57250 Netphen Dreis-Tiefenbach

info@dus-gmbh.de
http://www.dus-gmbh.de

Company	DUS Daten- und Steuerungstechnik GmbH
Street	Hinterm Lisch 33
City	D-57250 Netphen Dreis-Tiefenbach

http://www.abb.com

Project	17-040_Makros_AC500
Project description	PLC
Status	03-2017
Created with	EPLAN Electric P8 2.6.3.10651
Manufacturer (Company)	DUS Daten- und Steuerungstechnik GmbH
Responsible for project	Thomas Göbel

Created on	02.03.2017	by (short name)	TGO
Edit date	16.03.2017	by (short name)	TGO

Number of pages 182

Table of contents

Page	Sheet	Page description	Date	Last editor
==ABB=DOC/1	1	Title page / cover sheet	16.03.2017	TGO
==ABB=DOC/2	2	Table of contents	16.03.2017	TGO
==ABB=DOC/2.a	3	Table of contents	16.03.2017	TGO
==ABB=DOC/2.b	4	Table of contents	16.03.2017	TGO
==ABB=DOC/2.c	5	Table of contents	16.03.2017	TGO
==ABB=DOC/2.d	6	Table of contents	16.03.2017	TGO
==ABB=AC500+CM589-PNIO-4/1	7	CM589-PNIO-4	16.03.2017	TGO
==ABB=AC500+CM589-PNIO-4/2	8	CM589-PNIO-4	16.03.2017	TGO
==ABB=AC500+CM589-PNIO-4/3	9	CM589-PNIO-4	16.03.2017	TGO
==ABB=AC500+CM589-PNIO-4/4	10	CM589-PNIO-4	16.03.2017	TGO
==ABB=AC500+CM589-PNIO-4/5	11	Parts list	16.03.2017	TGO
==ABB=AC500+CM589-PNIO-4-XC/1	12	CM589-PNIO-4-XC	16.03.2017	TGO
==ABB=AC500+CM589-PNIO-4-XC/2	13	CM589-PNIO-4-XC	16.03.2017	TGO
==ABB=AC500+CM589-PNIO-4-XC/3	14	CM589-PNIO-4-XC	16.03.2017	TGO
==ABB=AC500+CM589-PNIO-4-XC/4	15	CM589-PNIO-4-XC	16.03.2017	TGO
==ABB=AC500+CM589-PNIO-4-XC/5	16	Parts list	16.03.2017	TGO
==ABB=AC500+PM5650-2ETH/1	17	PM5650-2ETH	16.03.2017	TGO
==ABB=AC500+PM5650-2ETH/2	18	PM5650-2ETH	16.03.2017	TGO
==ABB=AC500+PM5650-2ETH/3	19	PM5650-2ETH	16.03.2017	TGO
==ABB=AC500+PM5650-2ETH/4	20	PM5650-2ETH	16.03.2017	TGO
==ABB=AC500+PM5650-2ETH/5	21	PM5650-2ETH	16.03.2017	TGO
==ABB=AC500+PM5650-2ETH/6	22	Parts list	16.03.2017	TGO
==ABB=AC500+SM560-S/1	23	SM560-S	16.03.2017	TGO
==ABB=AC500+SM560-S/2	24	SM560-S	16.03.2017	TGO
==ABB=AC500+SM560-S/3	25	Parts list	16.03.2017	TGO
==ABB=AC500+SM560-S-FD-1/1	26	SM560-S-FD-1	16.03.2017	TGO
==ABB=AC500+SM560-S-FD-1/2	27	SM560-S-FD-1	16.03.2017	TGO
==ABB=AC500+SM560-S-FD-1/3	28	Parts list	16.03.2017	TGO
==ABB=AC500+SM560-S-FD-1-XC/1	29	SM560-S-FD-1-XC	16.03.2017	TGO
==ABB=AC500+SM560-S-FD-1-XC/2	30	SM560-S-FD-1-XC	16.03.2017	TGO
==ABB=AC500+SM560-S-FD-1-XC/3	31	Parts list	16.03.2017	TGO
==ABB=AC500+SM560-S-FD-4/1	32	SM560-S-FD-4	16.03.2017	TGO
==ABB=AC500+SM560-S-FD-4/2	33	SM560-S-FD-4	16.03.2017	TGO
==ABB=AC500+SM560-S-FD-4/3	34	Parts list	16.03.2017	TGO
==ABB=AC500+SM560-S-FD-4-XC/1	35	SM560-S-FD-4-XC	16.03.2017	TGO
==ABB=AC500+SM560-S-FD-4-XC/2	36	SM560-S-FD-4-XC	16.03.2017	TGO
==ABB=AC500+SM560-S-FD-4-XC/3	37	Parts list	16.03.2017	TGO
==ABB=AC500+SM560-S-XC/1	38	SM560-S-XC	16.03.2017	TGO
==ABB=AC500+SM560-S-XC/2	39	SM560-S-XC	16.03.2017	TGO
==ABB=AC500+SM560-S-XC/3	40	Parts list	16.03.2017	TGO

Table of contents

Page	Sheet	Page description	Date	Last editor
==ABB=AC500+TB5620-2ETH/1	41	TB5620-2ETH	16.03.2017	TGO
==ABB=AC500+TB5620-2ETH/2	42	TB5620-2ETH	16.03.2017	TGO
==ABB=AC500+TB5620-2ETH/3	43	Parts list	16.03.2017	TGO
==ABB=AC500+DO526/1	44	DO526	16.03.2017	TGO
==ABB=AC500+DO526/2	45	DO526	16.03.2017	TGO
==ABB=AC500+DO526/3	46	DO526	16.03.2017	TGO
==ABB=AC500+DO526/4	47	DO526	16.03.2017	TGO
==ABB=AC500+DO526/6	48	DO526	16.03.2017	TGO
==ABB=AC500+DO526/7	49	DO526	16.03.2017	TGO
==ABB=AC500+DO526/8	50	Parts list	16.03.2017	TGO
==ABB=CP6xx+CP604/1	51	CP604	16.03.2017	TGO
==ABB=CP6xx+CP604/2	52	CP604	16.03.2017	TGO
==ABB=CP6xx+CP604/3	53	CP604	16.03.2017	TGO
==ABB=CP6xx+CP604/4	54	CP604	16.03.2017	TGO
==ABB=CP6xx+CP604/5	55	CP604	16.03.2017	TGO
==ABB=CP6xx+CP604/6	56	Parts list	16.03.2017	TGO
==ABB=CP6xx+CP607/1	57	CP607	16.03.2017	TGO
==ABB=CP6xx+CP607/2	58	CP607	16.03.2017	TGO
==ABB=CP6xx+CP607/3	59	CP607	16.03.2017	TGO
==ABB=CP6xx+CP607/4	60	CP607	16.03.2017	TGO
==ABB=CP6xx+CP607/5	61	CP607	16.03.2017	TGO
==ABB=CP6xx+CP607/6	62	Parts list	16.03.2017	TGO
==ABB=CP6xx+CP610/1	63	CP610	16.03.2017	TGO
==ABB=CP6xx+CP610/2	64	CP610	16.03.2017	TGO
==ABB=CP6xx+CP610/3	65	CP610	16.03.2017	TGO
==ABB=CP6xx+CP610/4	66	CP610	16.03.2017	TGO
==ABB=CP6xx+CP610/5	67	CP610	16.03.2017	TGO
==ABB=CP6xx+CP610/6	68	Parts list	16.03.2017	TGO
==ABB=CP6xx+CP620/1	69	CP620	16.03.2017	TGO
==ABB=CP6xx+CP620/2	70	CP620	16.03.2017	TGO
==ABB=CP6xx+CP620/3	71	CP620	16.03.2017	TGO
==ABB=CP6xx+CP620/4	72	CP620	16.03.2017	TGO
==ABB=CP6xx+CP620/5	73	CP620	16.03.2017	TGO
==ABB=CP6xx+CP620/6	74	Parts list	16.03.2017	TGO
==ABB=CP6xx+CP620-WEB/1	75	CP620-WEB	16.03.2017	TGO
==ABB=CP6xx+CP620-WEB/2	76	CP620-WEB	16.03.2017	TGO
==ABB=CP6xx+CP620-WEB/3	77	CP620-WEB	16.03.2017	TGO
==ABB=CP6xx+CP620-WEB/4	78	CP620-WEB	16.03.2017	TGO
==ABB=CP6xx+CP620-WEB/5	79	CP620-WEB	16.03.2017	TGO
==ABB=CP6xx+CP620-WEB/6	80	Parts list	16.03.2017	TGO

Table of contents

Page	Sheet	Page description	Date	Last editor
==ABB=CP6xx+CP630/1	81	CP630	16.03.2017	TGO
==ABB=CP6xx+CP630/2	82	CP630	16.03.2017	TGO
==ABB=CP6xx+CP630/3	83	CP630	16.03.2017	TGO
==ABB=CP6xx+CP630/4	84	CP630	16.03.2017	TGO
==ABB=CP6xx+CP630/5	85	CP630	16.03.2017	TGO
==ABB=CP6xx+CP630/6	86	Parts list	16.03.2017	TGO
==ABB=CP6xx+CP630-WEB/1	87	CP630-WEB	16.03.2017	TGO
==ABB=CP6xx+CP630-WEB/2	88	CP630-WEB	16.03.2017	TGO
==ABB=CP6xx+CP630-WEB/3	89	CP630-WEB	16.03.2017	TGO
==ABB=CP6xx+CP630-WEB/4	90	CP630-WEB	16.03.2017	TGO
==ABB=CP6xx+CP630-WEB/5	91	CP630-WEB	16.03.2017	TGO
==ABB=CP6xx+CP630-WEB/6	92	Parts list	16.03.2017	TGO
==ABB=CP6xx+CP635/1	93	CP635	16.03.2017	TGO
==ABB=CP6xx+CP635/2	94	CP635	16.03.2017	TGO
==ABB=CP6xx+CP635/3	95	CP635	16.03.2017	TGO
==ABB=CP6xx+CP635/4	96	CP635	16.03.2017	TGO
==ABB=CP6xx+CP635/5	97	CP635	16.03.2017	TGO
==ABB=CP6xx+CP635/6	98	Parts list	16.03.2017	TGO
==ABB=CP6xx+CP635-B/1	99	CP635-B	16.03.2017	TGO
==ABB=CP6xx+CP635-B/2	100	CP635-B	16.03.2017	TGO
==ABB=CP6xx+CP635-B/3	101	CP635-B	16.03.2017	TGO
==ABB=CP6xx+CP635-B/4	102	CP635-B	16.03.2017	TGO
==ABB=CP6xx+CP635-B/5	103	CP635-B	16.03.2017	TGO
==ABB=CP6xx+CP635-B/6	104	Parts list	16.03.2017	TGO
==ABB=CP6xx+CP635-FB/1	105	CP635-FB	16.03.2017	TGO
==ABB=CP6xx+CP635-FB/2	106	CP635-FB	16.03.2017	TGO
==ABB=CP6xx+CP635-FB/3	107	CP635-FB	16.03.2017	TGO
==ABB=CP6xx+CP635-FB/4	108	CP635-FB	16.03.2017	TGO
==ABB=CP6xx+CP635-FB/5	109	CP635-FB	16.03.2017	TGO
==ABB=CP6xx+CP635-FB/6	110	Parts list	16.03.2017	TGO
==ABB=CP6xx+CP635-FW/1	111	CP635-FW	16.03.2017	TGO
==ABB=CP6xx+CP635-FW/2	112	CP635-FW	16.03.2017	TGO
==ABB=CP6xx+CP635-FW/3	113	CP635-FW	16.03.2017	TGO
==ABB=CP6xx+CP635-FW/4	114	CP635-FW	16.03.2017	TGO
==ABB=CP6xx+CP635-FW/5	115	CP635-FW	16.03.2017	TGO
==ABB=CP6xx+CP635-FW/6	116	Parts list	16.03.2017	TGO
==ABB=CP6xx+CP635-WEB/1	117	CP635-WEB	16.03.2017	TGO
==ABB=CP6xx+CP635-WEB/2	118	CP635-WEB	16.03.2017	TGO
==ABB=CP6xx+CP635-WEB/3	119	CP635-WEB	16.03.2017	TGO
==ABB=CP6xx+CP635-WEB/4	120	CP635-WEB	16.03.2017	TGO

Table of contents

Page	Sheet	Page description	Date	Last editor
==ABB=CP6xx+CP635-WEB/5	121	CP635-WEB	16.03.2017	TGO
==ABB=CP6xx+CP635-WEB/6	122	Parts list	16.03.2017	TGO
==ABB=CP6xx+CP635-Z/1	123	CP635-Z	16.03.2017	TGO
==ABB=CP6xx+CP635-Z/2	124	CP635-Z	16.03.2017	TGO
==ABB=CP6xx+CP635-Z/3	125	CP635-Z	16.03.2017	TGO
==ABB=CP6xx+CP635-Z/4	126	CP635-Z	16.03.2017	TGO
==ABB=CP6xx+CP635-Z/5	127	CP635-Z	16.03.2017	TGO
==ABB=CP6xx+CP635-Z/6	128	Parts list	16.03.2017	TGO
==ABB=CP6xx+CP651/1	129	CP651	16.03.2017	TGO
==ABB=CP6xx+CP651/2	130	CP651	16.03.2017	TGO
==ABB=CP6xx+CP651/3	131	CP651	16.03.2017	TGO
==ABB=CP6xx+CP651/4	132	CP651	16.03.2017	TGO
==ABB=CP6xx+CP651/5	133	CP651	16.03.2017	TGO
==ABB=CP6xx+CP651/6	134	Parts list	16.03.2017	TGO
==ABB=CP6xx+CP651-WEB/1	135	CP651-WEB	16.03.2017	TGO
==ABB=CP6xx+CP651-WEB/2	136	CP651-WEB	16.03.2017	TGO
==ABB=CP6xx+CP651-WEB/3	137	CP651-WEB	16.03.2017	TGO
==ABB=CP6xx+CP651-WEB/4	138	CP651-WEB	16.03.2017	TGO
==ABB=CP6xx+CP651-WEB/5	139	CP651-WEB	16.03.2017	TGO
==ABB=CP6xx+CP651-WEB/6	140	Parts list	16.03.2017	TGO
==ABB=CP6xx+CP661/1	141	CP661	16.03.2017	TGO
==ABB=CP6xx+CP661/2	142	CP661	16.03.2017	TGO
==ABB=CP6xx+CP661/3	143	CP661	16.03.2017	TGO
==ABB=CP6xx+CP661/4	144	CP661	16.03.2017	TGO
==ABB=CP6xx+CP661/5	145	CP661	16.03.2017	TGO
==ABB=CP6xx+CP661/6	146	Parts list	16.03.2017	TGO
==ABB=CP6xx+CP661-WEB/1	147	CP661-WEB	16.03.2017	TGO
==ABB=CP6xx+CP661-WEB/2	148	CP661-WEB	16.03.2017	TGO
==ABB=CP6xx+CP661-WEB/3	149	CP661-WEB	16.03.2017	TGO
==ABB=CP6xx+CP661-WEB/4	150	CP661-WEB	16.03.2017	TGO
==ABB=CP6xx+CP661-WEB/5	151	CP661-WEB	16.03.2017	TGO
==ABB=CP6xx+CP661-WEB/6	152	Parts list	16.03.2017	TGO
==ABB=CP6xx+CP665/1	153	CP665	16.03.2017	TGO
==ABB=CP6xx+CP665/2	154	CP665	16.03.2017	TGO
==ABB=CP6xx+CP665/3	155	CP665	16.03.2017	TGO
==ABB=CP6xx+CP665/4	156	CP665	16.03.2017	TGO
==ABB=CP6xx+CP665/5	157	CP665	16.03.2017	TGO
==ABB=CP6xx+CP665/6	158	Parts list	16.03.2017	TGO
==ABB=CP6xx+CP665-WEB/1	159	CP665-WEB	16.03.2017	TGO
==ABB=CP6xx+CP665-WEB/2	160	CP665-WEB	16.03.2017	TGO

Table of contents

Page	Sheet	Page description	Date	Last editor
==ABB=CP6xx+CP665-WEB/3	161	CP665-WEB	16.03.2017	TGO
==ABB=CP6xx+CP665-WEB/4	162	CP665-WEB	16.03.2017	TGO
==ABB=CP6xx+CP665-WEB/5	163	CP665-WEB	16.03.2017	TGO
==ABB=CP6xx+CP665-WEB/6	164	Parts list	16.03.2017	TGO
==ABB=CP6xx+CP665-Z/1	165	CP665-Z	16.03.2017	TGO
==ABB=CP6xx+CP665-Z/2	166	CP665-Z	16.03.2017	TGO
==ABB=CP6xx+CP665-Z/3	167	CP665-Z	16.03.2017	TGO
==ABB=CP6xx+CP665-Z/4	168	CP665-Z	16.03.2017	TGO
==ABB=CP6xx+CP665-Z/5	169	CP665-Z	16.03.2017	TGO
==ABB=CP6xx+CP665-Z/6	170	Parts list	16.03.2017	TGO
==ABB=CP6xx+CP676/1	171	CP676	16.03.2017	TGO
==ABB=CP6xx+CP676/2	172	CP676	16.03.2017	TGO
==ABB=CP6xx+CP676/3	173	CP676	16.03.2017	TGO
==ABB=CP6xx+CP676/4	174	CP676	16.03.2017	TGO
==ABB=CP6xx+CP676/5	175	CP676	16.03.2017	TGO
==ABB=CP6xx+CP676/6	176	Parts list	16.03.2017	TGO
==ABB=CP6xx+CP676-WEB/1	177	CP676-WEB	16.03.2017	TGO
==ABB=CP6xx+CP676-WEB/2	178	CP676-WEB	16.03.2017	TGO
==ABB=CP6xx+CP676-WEB/3	179	CP676-WEB	16.03.2017	TGO
==ABB=CP6xx+CP676-WEB/4	180	CP676-WEB	16.03.2017	TGO
==ABB=CP6xx+CP676-WEB/5	181	CP676-WEB	16.03.2017	TGO
==ABB=CP6xx+CP676-WEB/6	182	Parts list	16.03.2017	TGO

-A1

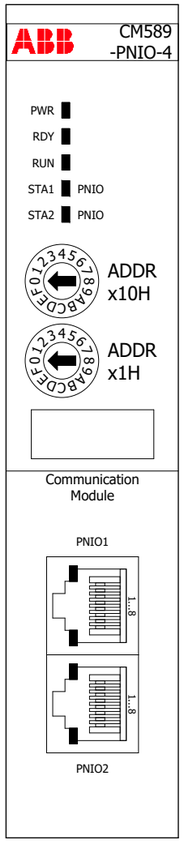

ABB\CM589-PNIO-4.ema
CM589-PNIO-4:
AC500,Communication Module
PROFINET IO 4xDevice 2xRJ45
integrierter Switch
Version 03/2017
Allpolig
Variante A

0	1	2	3	4	5	6	7	8	9

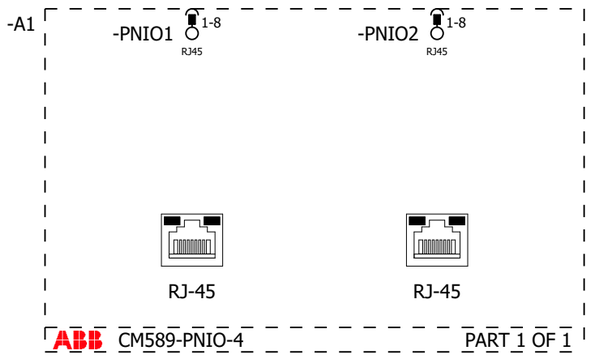

ABB\CM589-PNIO-4.ema
CM589-PNIO-4:
AC500,Communication Module
PROFINET IO 4xDevice 2xRJ45
integrierter Switch
Version 03/2017
Einpolig
Variante A

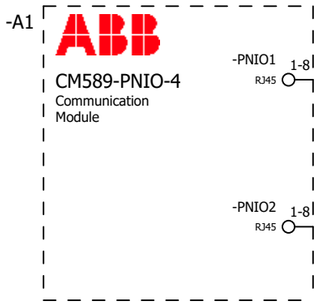

ABB\CM589-PNIO-4.ema
CM589-PNIO-4:
AC500,Communication Module
PROFINET IO 4xDevice 2xRJ45
integrierter Switch
Version 03/2017
Übersicht
Variante A

-A1
ABB.1SAP172900R0111
CM589-PNIO-4
0

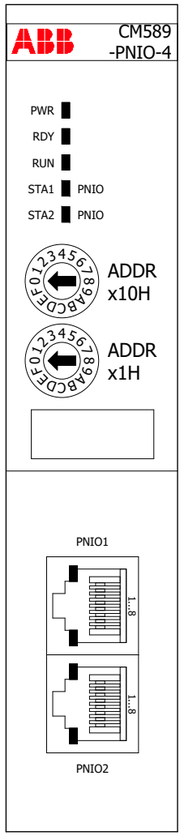

ABB\CM589-PNIO-4.ema
CM589-PNIO-4:
AC500,Communication Module
PROFINET IO 4xDevice 2xRJ45
integrierter Switch
Version 03/2017
Schaltschrankaufbau
Variante A

Parts list

device tag	Quantity QU	Designation 1 Description Technical characteristics	Type number Order number	manufacturer supplier	part number function text
==ABB =AC500 +CM589-PNIO-4 -A1	1 PCE	CM589-PNIO-4:AC500,Communication Module PROFINET IO 4xDevice, 2xRJ45, integrated CM589-PNIO-4:AC500,Communication Module PROFINET IO 4xDevice,2xRJ45, integrated switch	CM589-PNIO-4 1SAP172900R0111	ABB	ABB.1SAP172900R0111

-A1

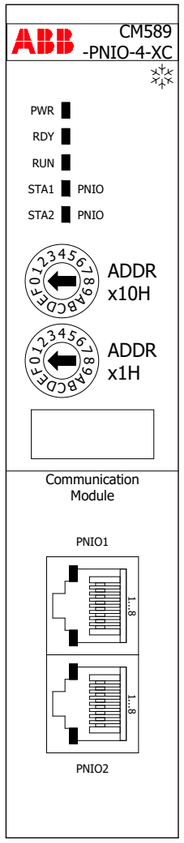

ABB\CM589-PNIO-4-XC.ema
CM589-PNIO-4-XC:AC500
Communication Module
PROFINET IO 4xDevice
2xRJ45 plugs, integrated switch
Outdoor&eXtrem Conditions
Version 03/2017
Allpolig
Variante A

0	1	2	3	4	5	6	7	8	9

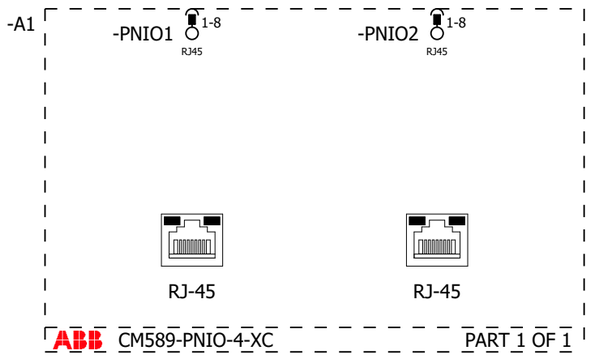

ABB\CM589-PNIO-4-XC.ema
CM589-PNIO-4-XC:AC500
Communication Module
PROFINET IO 4xDevice
2xRJ45 plugs, integrated switch
Outdoor&eXtrem Conditions
Version 03/2017
Einpolig
Variante A

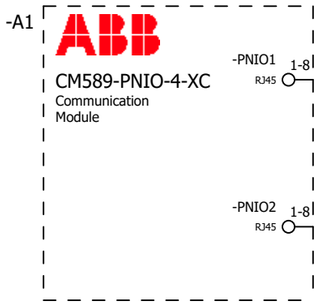

ABB\CM589-PNIO-4-XC.ema
CM589-PNIO-4-XC:AC500
Communication Module
PROFINET IO 4xDevice
2xRJ45 plugs, integrated switch
Outdoor&eXtrem Conditions
Version 03/2017
Übersicht
Variante A

-A1
ABB.1SAP372900R0111
CM589-PNIO-4-XC
0

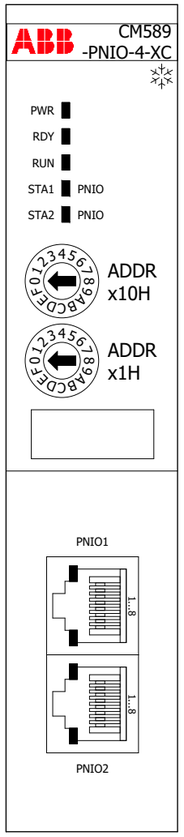

ABB\CM589-PNIO-4-XC.ema
CM589-PNIO-4-XC:AC500
Communication Module
PROFINET IO 4xDevice
2xRJ45 plugs, integrated switch
Outdoor&eXtrem Conditions
Version 03/2017
Schaltschrankaufbau
Variante A

Parts list

device tag	Quantity QU	Designation 1 Description Technical characteristics	Type number Order number	manufacturer supplier	part number function text
==ABB =AC500 +CM589-PNIO-4-XC -A1	1 PCE	CM589-PNIO-4-XC:AC500, Communication Module PROFINET IO 4xDevice, 2xRJ45 plugs, CM589-PNIO-4-XC:AC500, Communication Module PROFINET IO 4xDevice, 2xRJ45 plugs, integrated switch, Outdoor&eXtrem Conditions	CM589-PNIO-4-XC 1SAP372900R0111	ABB	ABB.1SAP372900R0111

-A1

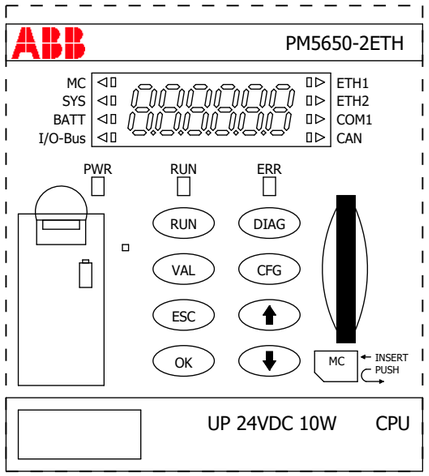

ABB\PM5650-2ETH.ema
PM5650-2ETH:
AC500, Programmable Logic Controller 80MB
24VDC, 2xETHERNET, 1xRS232/485, CAN, SD-Card Slot, LCD Display
Version 03/2017
Allpolig
Variante A

0	1	2	3	4	5	6	7	8	9

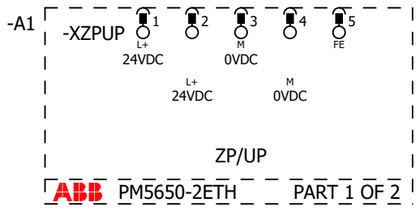

ABB\PM5650-2ETH.ema
PM5650-2ETH:
AC500, Programmable Logic Controller 80MB
24VDC, 2xETHERNET, 1xRS232/485, CAN, SD-Card Slot, LCD Display
Version 03/2017
Allpolig
Variante B

0	1	2	3	4	5	6	7	8	9

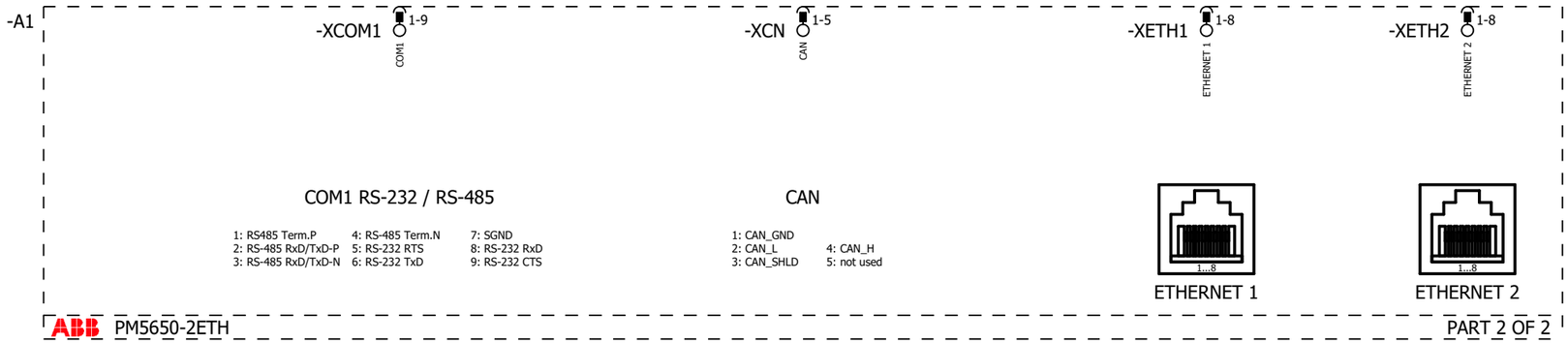

Ethernet 1 Netzwerkadresse:

???.???.???.???

Ethernet 2 Netzwerkadresse:

???.???.???.???

ABB\PM5650-2ETH.ema
PM5650-2ETH:
AC500, Programmable Logic Controller 80MB
24VDC, 2xETHERNET, 1xRS232/485, CAN, SD-Card Slot, LCD Display
Version 03/2017
Einpolig
Variante A

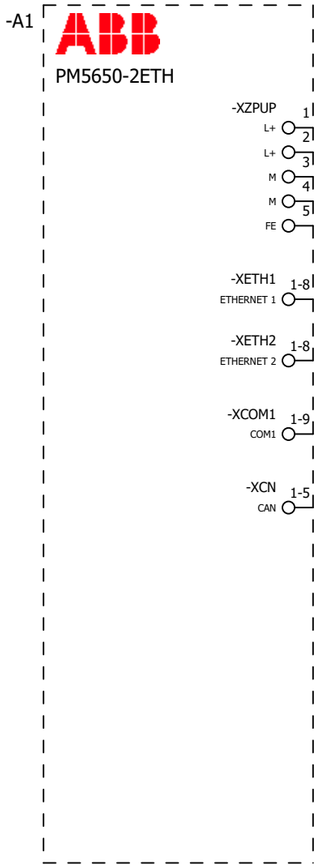

ABB\PM5650-2ETH.ema
PM5650-2ETH:
AC500, Programmable Logic Controller 80MB
24VDC, 2xETHERNET, 1xRS232/485, CAN, SD-Card Slot, LCD Display
Version 03/2017
Übersicht
Variante A

-A1
ABB.1SAP141000R0278
PM5650-2ETH
0

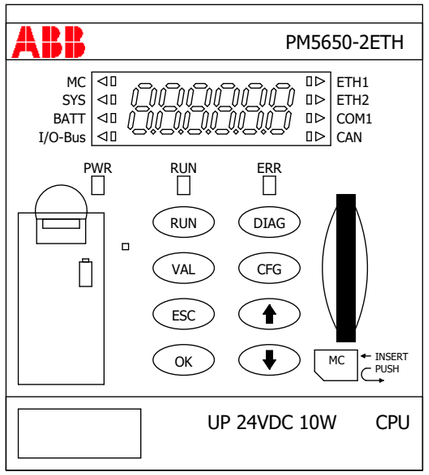

ABB\PM5650-2ETH.ema
PM5650-2ETH:
AC500, Programmable Logic Controller 80MB
24VDC, 2xETHERNET, 1xRS232/485, CAN, SD-Card Slot, LCD Display
Version 03/2017
Schaltschrankaufbau
Variante A

Parts list

device tag	Quantity QU	Designation 1 Description Technical characteristics	Type number Order number	manufacturer supplier	part number function text
==ABB =AC500 +PM5650-2ETH -A1	1 PCE	PM5650-2ETH:AC500, Programmable Logic Controller 80MB, 24VDC, 2xETHERNET, PM5650-2ETH:AC500, Programmable Logic Controller 80MB, 24VDC, 2xETHERNET, 1xRS232/485, CAN, SD-Card Slot, LCD Display	PM5650-2ETH 1SAP141000R0278	ABB	ABB.1SAP141000R0278

-A1

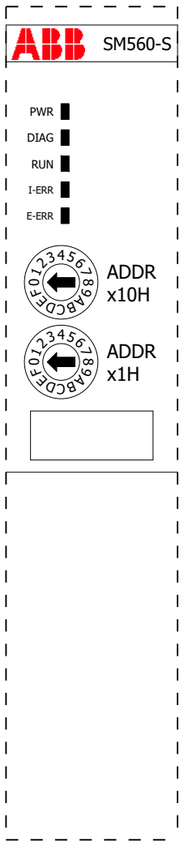

ABB\SM560-S.ema
SM560-S:
AC500, Safety module - CPU Safety related module up to SIL 3
Version 03/2017
Allpolig
Variante A

-A1
ABB.1SAP280000R0001
SM560-S
0

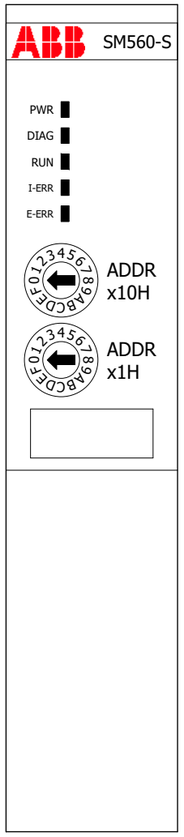

ABB\SM560-S.ema
SM560-S:
AC500, Safety module - CPU Safety related module up to SIL 3
Version 03/2017
Schaltschrankaufbau
Variante A

			Date	16.03.2017	PLC		SM560-S	== ABB	Page	24
			Ed.	TGO				= AC500	from	182
			Appr					++		
Modification	Date	Name	Original		Replacement of	Replaced by		+ SM560-S	Page	2

Parts list

device tag	Quantity QU	Designation 1 Description Technical characteristics	Type number Order number	manufacturer supplier	part number function text
==ABB =AC500 +SM560-S -A1	1 PCE	SM560-S:AC500, Safety module - CPU Safety related module up to SIL 3 SM560-S:AC500, Safety module - CPU Safety related module up to SIL 3	SM560-S 1SAP280000R0001	ABB	ABB.1SAP280000R0001

-A1

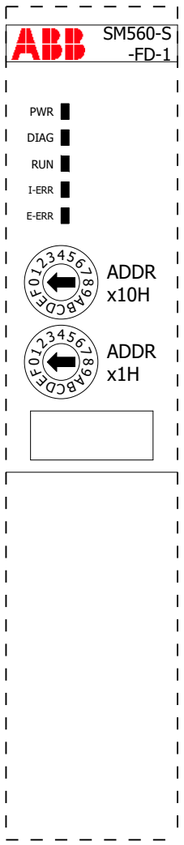

ABB\SM560-S-FD-1.ema
SM560-S-FD-1:
AC500, Safety module-CPU, Safety related module up to SIL 3 with F-Device functionality for 1 PROFIsafe network
Version 03/2017
Allpolig
Variante A

-A1
ABB.1SAP286000R0001
SM560-S-FD-1
0

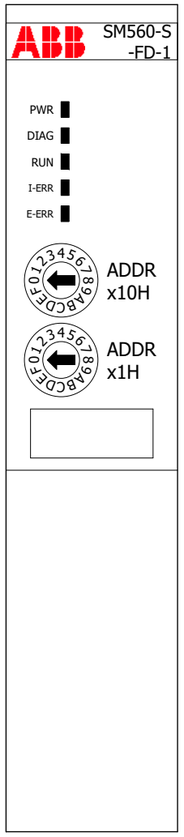

ABB\SM560-S-FD-1.ema
SM560-S-FD-1:
AC500, Safety module-CPU, Safety related module up to SIL 3 with F-Device functionality for 1 PROFIsafe network
Version 03/2017
Schaltschrankaufbau
Variante A

Parts list

device tag	Quantity QU	Designation 1 Description Technical characteristics	Type number Order number	manufacturer supplier	part number function text
==ABB =AC500 +SM560-S-FD-1 -A1	1 PCE	SM560-S-FD-1:AC500, Safety module-CPU, Safety related module up to SIL 3 with F-Device SM560-S-FD-1:AC500, Safety module-CPU, Safety related module up to SIL 3 with F-Device functionality for 1 PROFIsafe network	SM560-S-FD-1 1SAP286000R0001	ABB	ABB.1SAP286000R0001

-A1

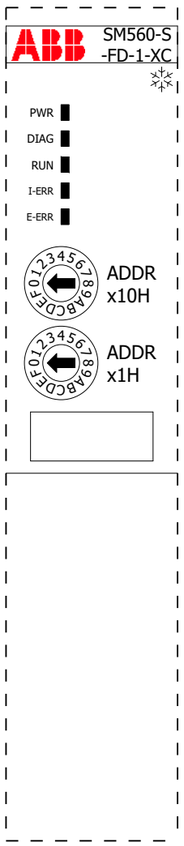

ABB\SM560-S-FD-1-XC.ema
SM560-S-FD-1-XC:
AC500, Safety module-CPU, Safety related module up to SIL 3 with F-Device functionality for 1 PROFIsafe network, Outdoor&eXtreme Conditions
Version 03/2017
Allpolig
Variante A

-A1
ABB.1SAP386000R0001
SM560-S-FD-1-XC
0

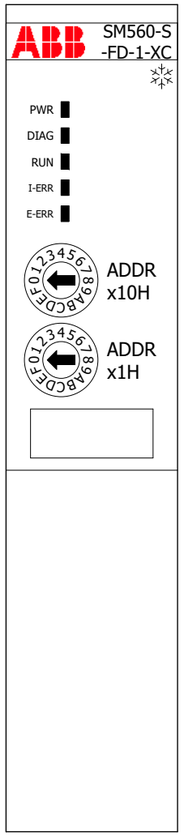

ABB\SM560-S-FD-1-XC.ema
SM560-S-FD-1-XC:
AC500, Safety module-CPU, Safety related module up to SIL 3 with F-Device functionality for 1 PROFIsafe network, Outdoor&eXtreme Conditions
Version 03/2017
Schaltschrankaufbau
Variante A

Parts list

device tag	Quantity QU	Designation 1 Description Technical characteristics	Type number Order number	manufacturer supplier	part number function text
==ABB =AC500 +SM560-S-FD-1-XC -A1	1 PCE	SM560-S-FD-1-XC:AC500, Safety module-CPU, up to SIL 3 with F-Device SM560-S-FD-1-XC:AC500, Safety module-CPU, Safety related module up to SIL 3 with F-Device functionality for 1 PROFIsafe network, Outdoor&eXtreme Conditions	SM560-S-FD-1-XC 1SAP386000R0001	ABB	ABB.1SAP386000R0001

-A1

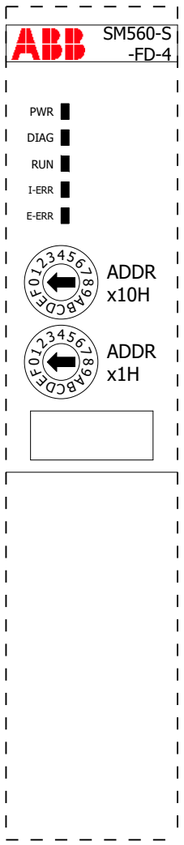

ABB\SM560-S-FD-4.ema
SM560-S-FD-4:
AC500, Safety module-CPU Safety related module up to SIL 3 with F-Device functionality for 4 PROFIsafe networks
Version 03/2017
Allpolig
Variante A

-A1
ABB.1SAP286100R0001
SM560-S-FD-4
0

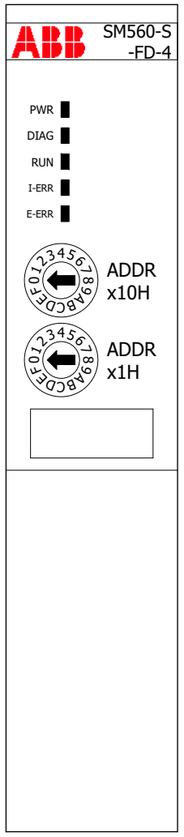

ABB\SM560-S-FD-4.ema
SM560-S-FD-4:
AC500, Safety module-CPU Safety related module up to SIL 3 with F-Device functionality for 4 PROFIsafe networks
Version 03/2017
Schaltschrankaufbau
Variante A

Parts list

device tag	Quantity QU	Designation 1 Description Technical characteristics	Type number Order number	manufacturer supplier	part number function text
==ABB =AC500 +SM560-S-FD-4 -A1	1 PCE	SM560-S-FD-4:AC500, Safety module-CPU Safety related module up to SIL 3 with F-Device SM560-S-FD-4:AC500, Safety module-CPU Safety related module up to SIL 3 with F-Device functionality for 4 PROFIsafe networks	SM560-S-FD-4 1SAP286100R0001	ABB	ABB.1SAP286100R0001

-A1

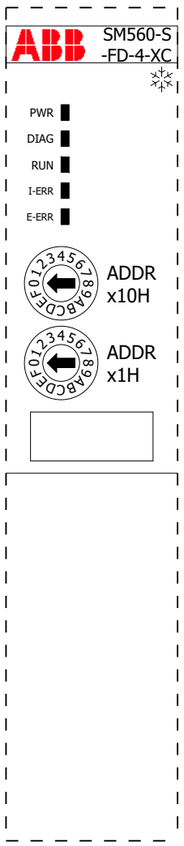

ABB\SM560-S-FD-4-XC.ema
SM560-S-FD-4-XC:
AC500, Safety module-CPU, Safety related module up to SIL 3 with F-Device functionality for 4 PROFIsafe networks, Outdoor&eXtreme Conditions
Version 03/2017
Allpolig
Variante A

-A1
ABB.1SAP386100R0001
SM560-S-FD-4-XC
0

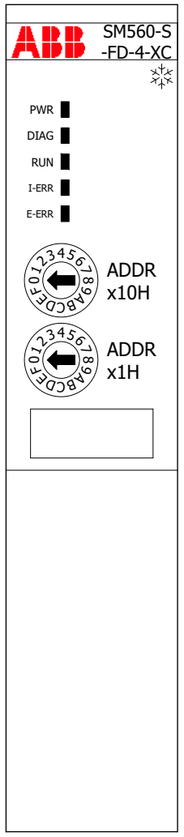

ABB\SM560-S-FD-4-XC.ema
SM560-S-FD-4-XC:
AC500, Safety module-CPU, Safety related module up to SIL 3 with F-Device functionality for 4 PROFIsafe networks, Outdoor&eXtreme Conditions
Version 03/2017
Schaltschrankaufbau
Variante A

Parts list

device tag	Quantity QU	Designation 1 Description Technical characteristics	Type number Order number	manufacturer supplier	part number function text
==ABB =AC500 +SM560-S-FD-4-XC -A1	1 PCE	SM560-S-FD-4-XC:AC500, Safety module-CPU, up to SIL 3 with F-Device SM560-S-FD-4-XC:AC500, Safety module-CPU, Safety related module up to SIL 3 with F-Device functionality for 4 PROFIsafe networks, Outdoor&eXtreme Conditions	SM560-S-FD-4-XC 1SAP386100R0001	ABB	ABB.1SAP386100R0001

-A1

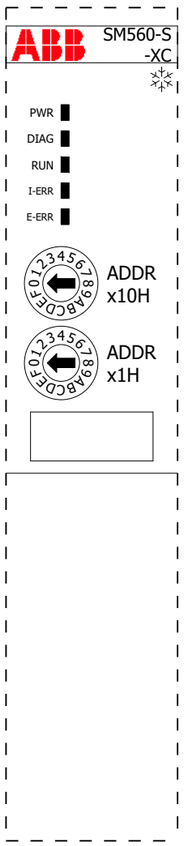

ABB\SM560-S-XC.ema
SM560-S-XC:
AC500, Safety module - CPU Safety related module up to SIL 3
Outdoor&eXtreme Conditions
Version 03/2017
Allpolig
Variante A

-A1
ABB.1SAP380000R0001
SM560-S-XC
0

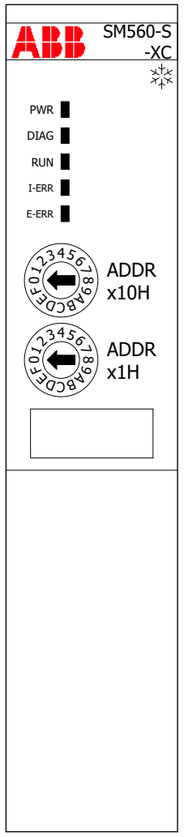

ABB\SM560-S-XC.ema
SM560-S-XC:
AC500, Safety module - CPU Safety related module up to SIL 3
Outdoor&eXtreme Conditions
Version 03/2017
Schaltschrankaufbau
Variante A

Parts list

device tag	Quantity QU	Designation 1 Description Technical characteristics	Type number Order number	manufacturer supplier	part number function text
==ABB =AC500 +SM560-S-XC -A1	1 PCE	SM560-S-XC:AC500, Safety module - CPU Safety related module up to SIL 3 SM560-S-XC:AC500, Safety module - CPU Safety related module up to SIL 3 Outdoor&eXtreme Conditions	SM560-S-XC 1SAP380000R0001	ABB	ABB.1SAP380000R0001

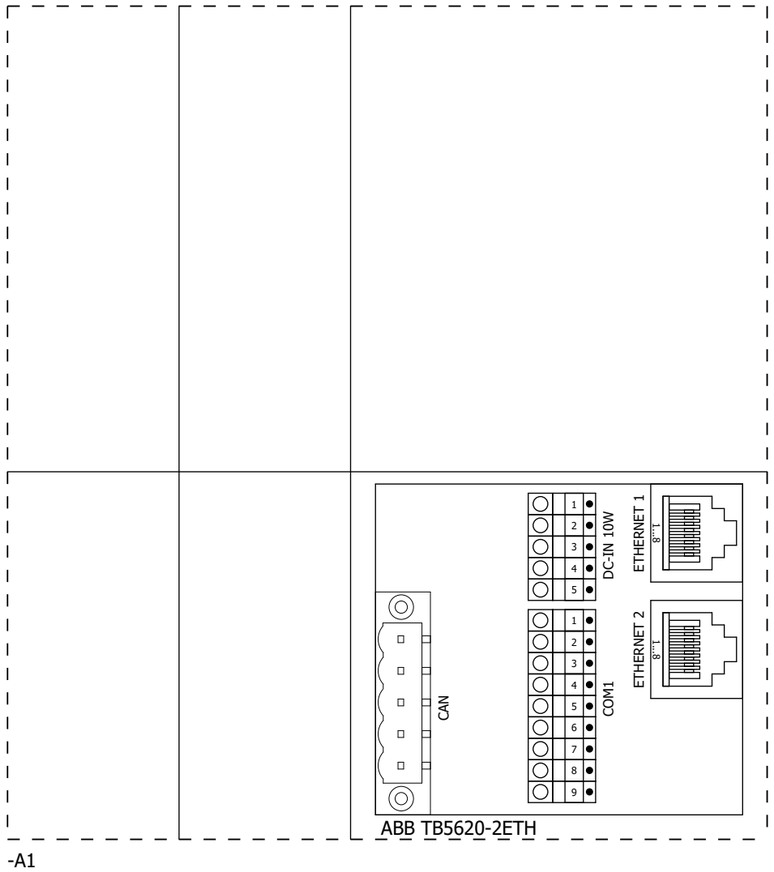

ABB\TB5620-2ETH.ema
TB5620-2ETH:
AC500, Terminal Base, 2xslots, 2xETHERNET RJ45, 1xCOM, 24VDC, CAN connector, spring terminals
Version 03/2017
Allpolig
Variante A

-A1
ABB.1SAP112300R0278
TB5620-2ETH
0

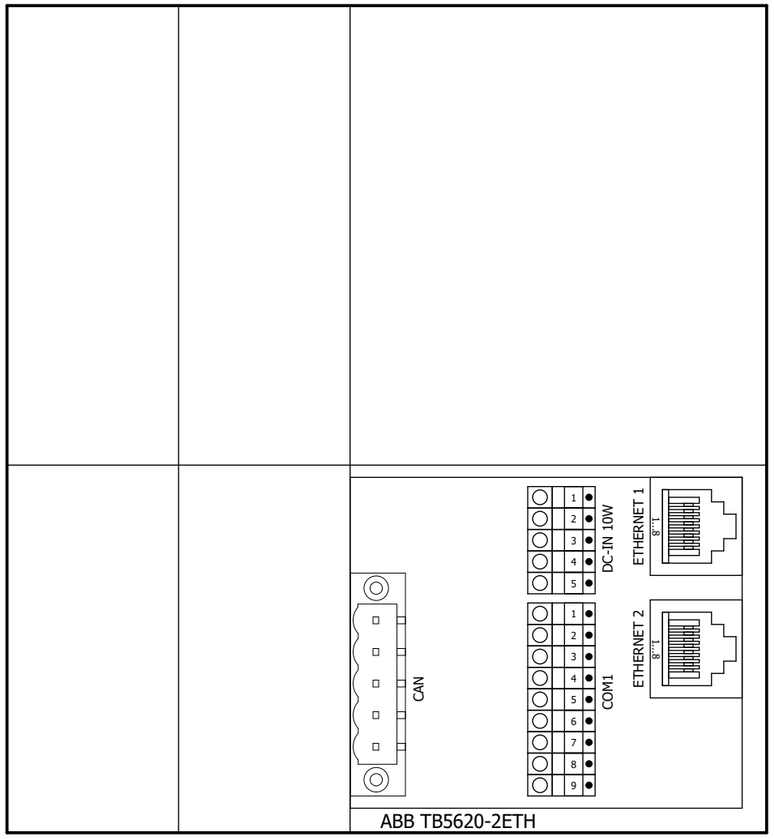

ABB\TB5620-2ETH.ema
TB5620-2ETH:
AC500, Terminal Base, 2xslots, 2xETHERNET RJ45, 1xCOM, 24VDC, CAN connector, spring terminals
Version 03/2017
Schaltschrankaufbau
Variante A

Parts list

device tag	Quantity QU	Designation 1 Description Technical characteristics	Type number Order number	manufacturer supplier	part number function text
==ABB =AC500 +TB5620-2ETH -A1	1 PCE	TB5620-2ETH:AC500, Terminal Base, 2xslots, 2xETHERNET RJ45, 1xCOM, 24VDC, CAN TB5620-2ETH:AC500, Terminal Base, 2xslots, 2xETHERNET RJ45, 1xCOM, 24VDC, CAN connector, spring terminals	TB5620-2ETH 1SAP112300R0278	ABB	ABB.1SAP112300R0278

-A1

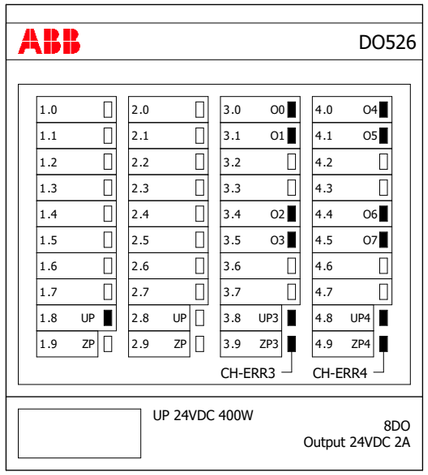

ABB\DO526.ema
DO526:
S500,Digital Output Module 8DO, DO-Transistor:24VDC/2A,1-wire
Version 03/2017
Allpolig
Variante A

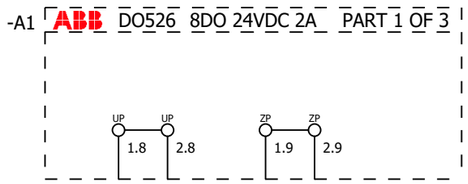

ABB\DO526.ema
DO526:
S500,Digital Output Module 8DO, DO-Transistor:24VDC/2A,1-wire
Version 03/2017
Allpolig
Variante B

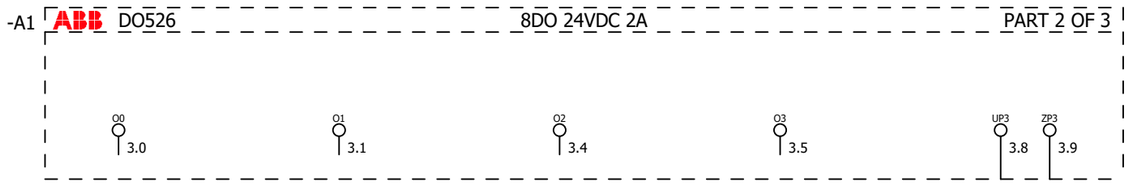

ABB\DO526.ema
DO526:
S500,Digital Output Module 8DO, DO-Transistor:24VDC/2A,1-wire
Version 03/2017
Allpolig
Variante C

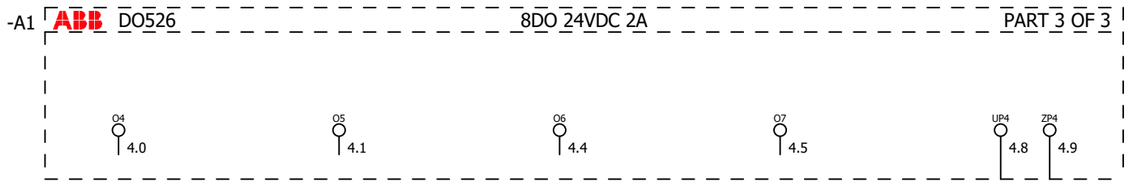

ABB\DO526.ema
DO526:
S500,Digital Output Module 8DO, DO-Transistor:24VDC/2A,1-wire
Version 03/2017
Allpolig
Variante D

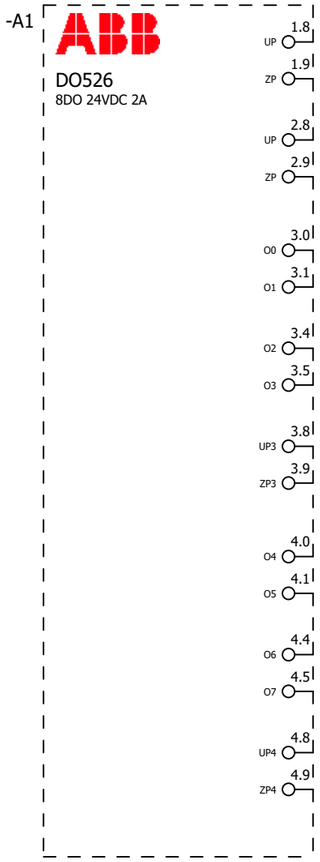

ABB\DO526.ema
DO526:
S500,Digital Output Module 8DO, DO-Transistor:24VDC/2A,1-wire
Version 03/2017
Übersicht
Variante A

			Date	16.03.2017	PLC		DO526	== ABB	Page 48
			Ed.	TGO				= AC500	from 182
			Appr					++	
Modification	Date	Name	Original		Replacement of	Replaced by		+ DO526	Page 6

-A1
0

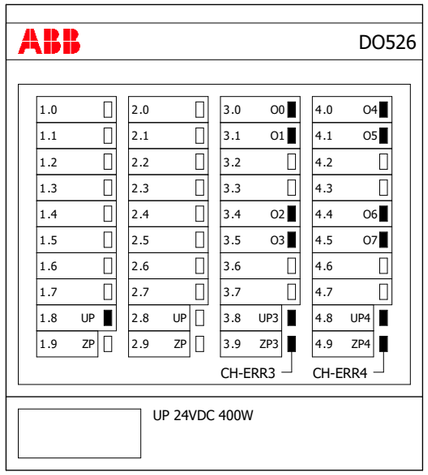

ABB\DO526.ema
DO526:
S500,Digital Output Module 8DO, DO-Transistor:24VDC/2A,1-wire
Version 03/2017
Schaltschrankaufbau
Variante A

Parts list

device tag	Quantity QU	Designation 1 Description Technical characteristics	Type number Order number	manufacturer supplier	part number function text
==ABB =AC500 +DO526 -A1	1 PCE	DO526:S500,Digital Output Module 8DO-Transistor:24VDC/2A,1-wire DO526:S500,Digital Output Module 8DO, DO-Transistor:24VDC/2A,1-wire	DO526 1SAP240800R0001	ABB	ABB.1SAP240800R0001

-A1

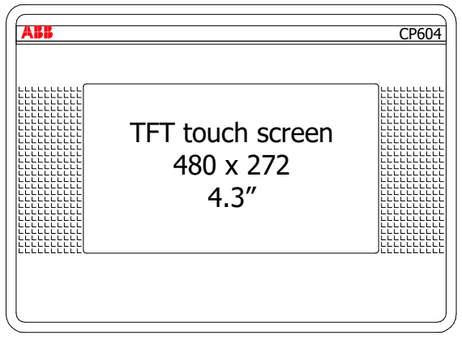

ABB\CP604.ema
CP604 Control Panel 4.3" TFT touch screen,
64 K colors, 480x272 pixel, PB610-B runtime license
Version 03/2017
Allpolig
Variante A

0	1	2	3	4	5	6	7	8	9

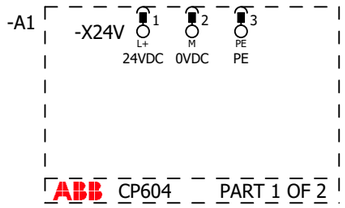

ABB\CP604.ema
CP604 Control Panel 4.3" TFT touch screen,
64 K colors, 480x272 pixel, PB610-B runtime license
Version 03/2017
Allpolig
Variante B

0	1	2	3	4	5	6	7	8	9

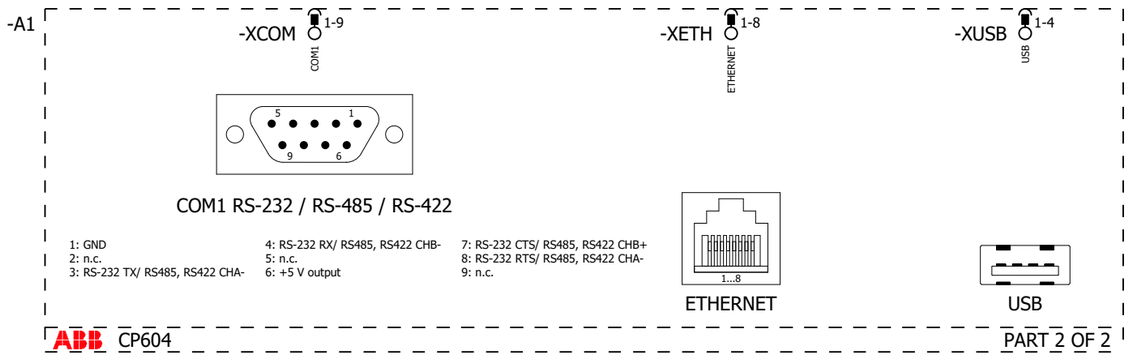

Ethernet Netzwerkadresse:

???.???.???.???

ABB\CP604.ema
CP604 Control Panel 4.3" TFT touch screen,
64 K colors, 480x272 pixel, PB610-B runtime license
Version 03/2017
Einpolig
Variante A

2 4

			Date	16.03.2017	PLC		CP604	== ABB	Page 53
			Ed.	TGO				= CP6xx	from 182
			Appr					++	
Modification	Date	Name	Original		Replacement of	Replaced by		+ CP604	Page 3

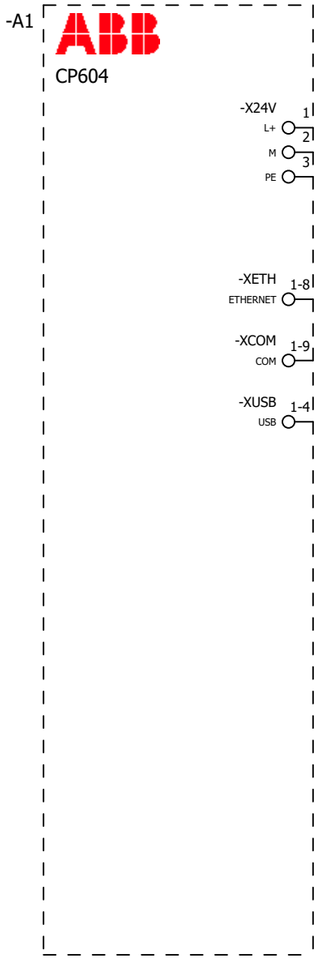

ABB\CP604.ema
CP604 Control Panel 4.3" TFT touch screen,
64 K colors, 480x272 pixel, PB610-B runtime license
Version 03/2017
Übersicht
Variante A

-A1
ABB.1SAP504100R0001
CP604
1

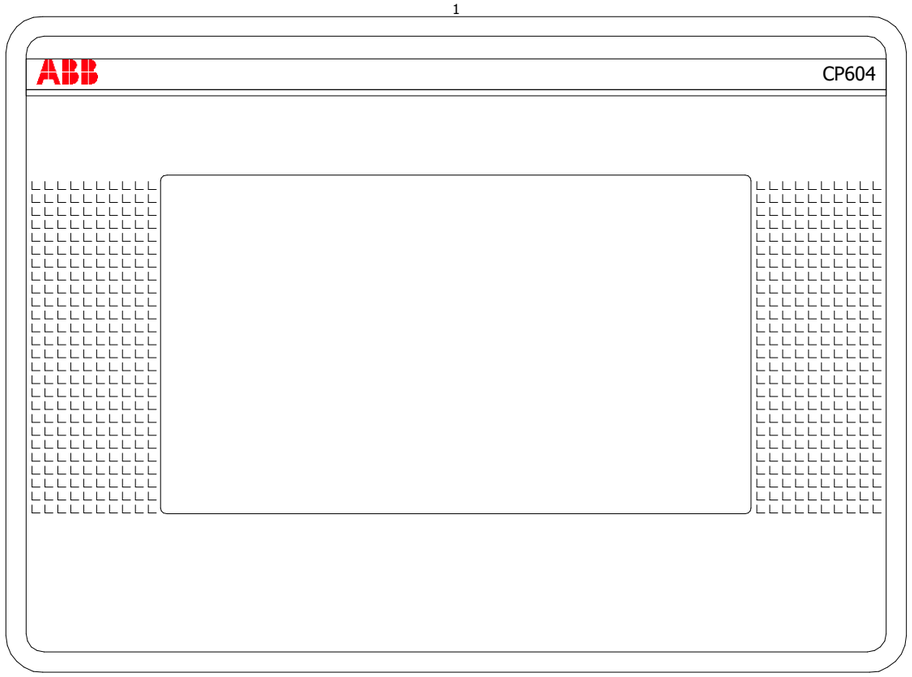

ABB\CP604.ema
CP604 Control Panel 4.3" TFT touch screen,
64 K colors, 480x272 pixel, PB610-B runtime license
Version 03/2017
Schaltschrankaufbau
Variante A

Parts list

device tag	Quantity QU	Designation 1 Description Technical characteristics	Type number Order number	manufacturer supplier	part number function text
==ABB =CP6xx +CP604 -A1	1 PCE	CP604:CP600-eCo, control panel, TFT grafic display, touchscreen, 4.3", 480x272 pixel, CP604 Control Panel 4.3" TFT touch screen, 64 K colors, 480x272 pixel, PB610-B runtime license	CP604 1SAP504100R0001	ABB	ABB.1SAP504100R0001

-A1

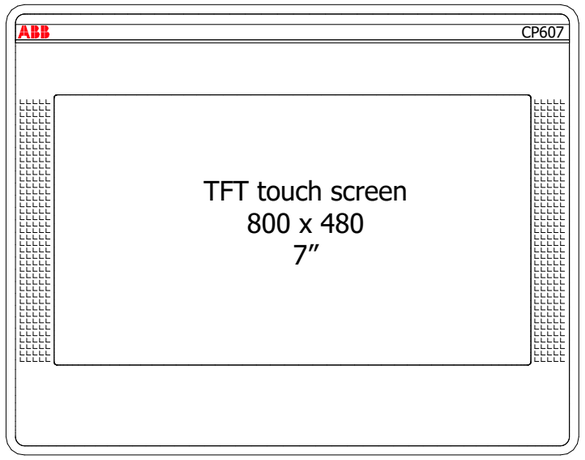

ABB\CP607.ema
CP607 Control Panel 7" TFT touch screen,
64 K colors, 800x480 pixel, PB610-B runtime license
Version 03/2017
Allpolig
Variante A

0	1	2	3	4	5	6	7	8	9

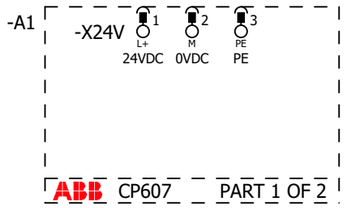

ABB\CP607.ema
CP607 Control Panel 7" TFT touch screen,
64 K colors, 800x480 pixel, PB610-B runtime license
Version 03/2017
Allpolig
Variante B

0	1	2	3	4	5	6	7	8	9

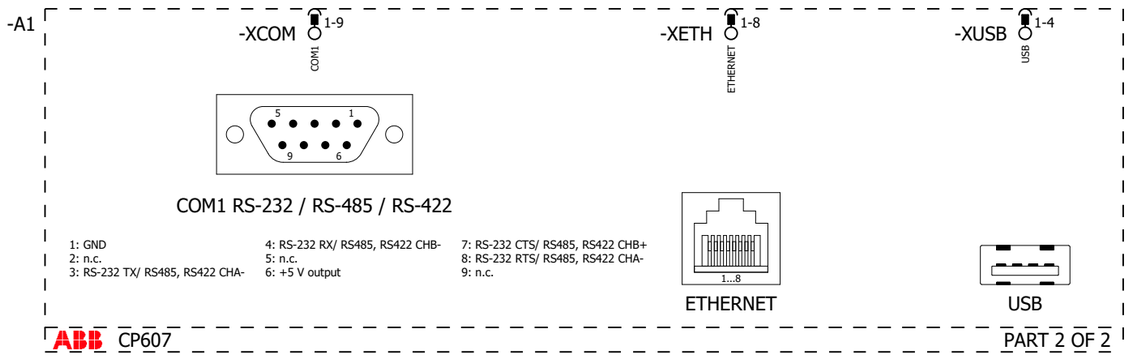

Ethernet Netzwerkadresse:

???.???.???.???

ABB\CP607.ema
CP607 Control Panel 7" TFT touch screen,
64 K colors, 800x480 pixel, PB610-B runtime license
Version 03/2017
Einpolig
Variante A

2 4

			Date	16.03.2017	PLC		CP607	== ABB	Page 59
			Ed.	TGO				= CP6xx	from 182
			Appr					++	
Modification	Date	Name	Original		Replacement of	Replaced by		+ CP607	Page 3

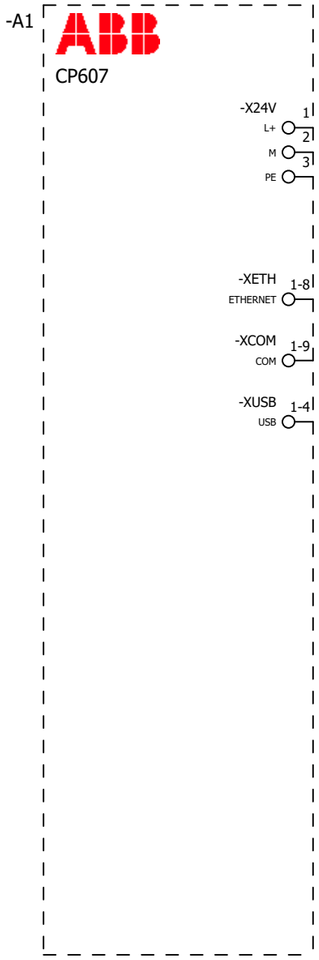

ABB\CP607.ema
CP607 Control Panel 7" TFT touch screen,
64 K colors, 800x480 pixel, PB610-B runtime license
Version 03/2017
Übersicht
Variante A

-A1
ABB.1SAP507100R0001
CP607
1

ABB\CP607.ema
CP607 Control Panel 7" TFT touch screen,
64 K colors, 800x480 pixel, PB610-B runtime license
Version 03/2017
Schaltschrankaufbau
Variante A

Parts list

device tag	Quantity QU	Designation 1 Description Technical characteristics	Type number Order number	manufacturer supplier	part number function text
==ABB =CP6xx +CP607 -A1	1 PCE	CP607:CP600-eCo, control panel, TFT grafic display, touchscreen, 7", 800x480 pixel, CP607 Control Panel 7" TFT touch screen, 64 K colors, 800x480 pixel, PB610-B runtime license	CP607 1SAP507100R0001	ABB	ABB.1SAP507100R0001

-A1

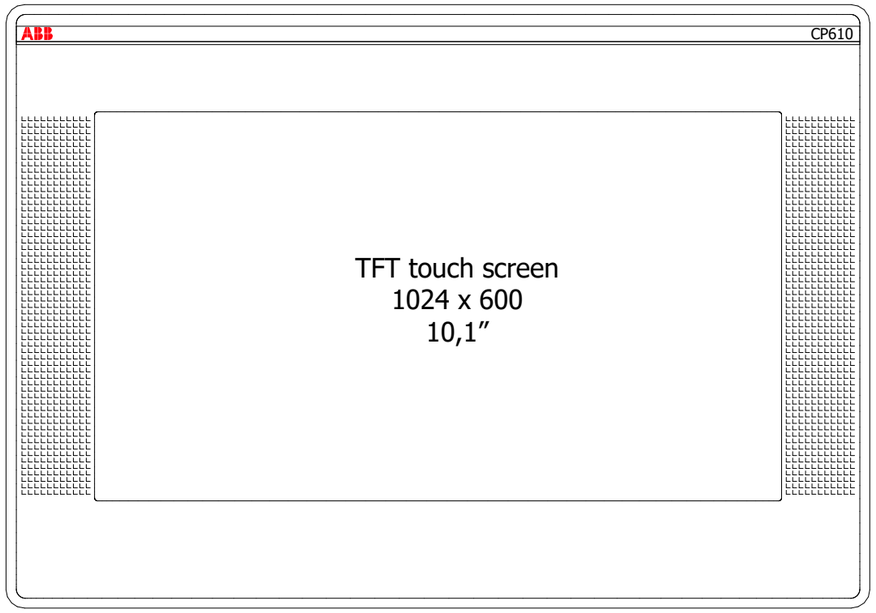

ABB\CP610.ema
CP610 Control Panel 10.1" TFT touch screen,
64 K colors, 1024x600 pixel, PB610-B runtime license
Version 03/2017
Allpolig
Variante A

0	1	2	3	4	5	6	7	8	9

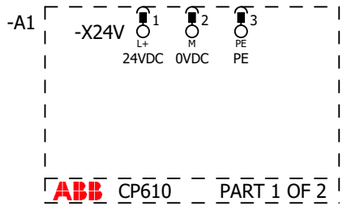

ABB\CP610.ema
CP610 Control Panel 10.1" TFT touch screen,
64 K colors, 1024x600 pixel, PB610-B runtime license
Version 03/2017
Allpolig
Variante B

0	1	2	3	4	5	6	7	8	9

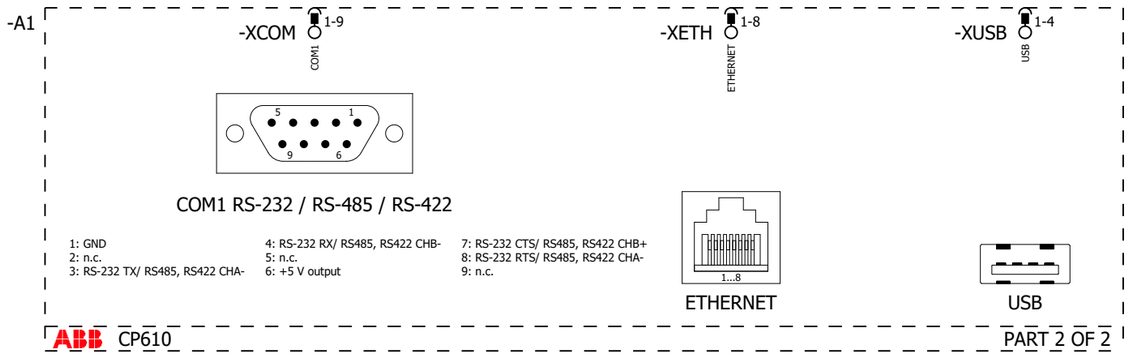

Ethernet Netzwerkadresse:

???.???.???.???

ABB\CP610.ema
CP610 Control Panel 10.1" TFT touch screen,
64 K colors, 1024x600 pixel, PB610-B runtime license
Version 03/2017
Einpolig
Variante A

2 4

			Date	16.03.2017	PLC		CP610	== ABB	Page 65
			Ed.	TGO				= CP6xx	from 182
			Appr					++	
Modification	Date	Name	Original		Replacement of	Replaced by		+ CP610	Page 3

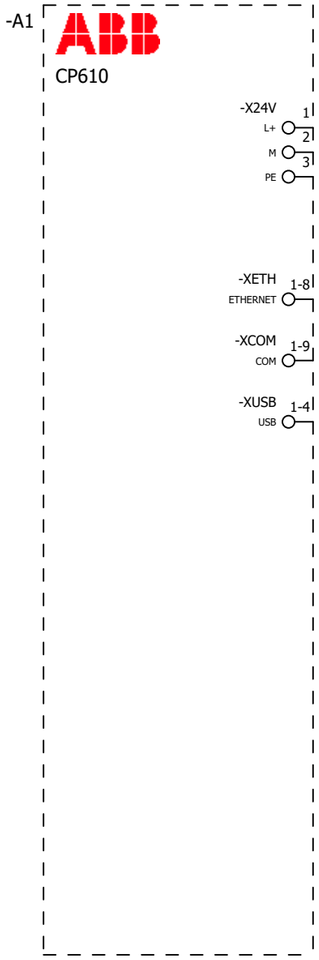

ABB\CP610.ema
CP610 Control Panel 10.1" TFT touch screen,
64 K colors, 1024x600 pixel, PB610-B runtime license
Version 03/2017
Übersicht
Variante A

-A1
ABB.1SAP510100R0001
CP610
1

ABB\CP610.ema
CP610 Control Panel 10.1" TFT touch screen,
64 K colors, 1024x600 pixel, PB610-B runtime license
Version 03/2017
Schaltschrankaufbau
Variante A

Parts list

device tag	Quantity QU	Designation 1 Description Technical characteristics	Type number Order number	manufacturer supplier	part number function text
==ABB =CP6xx +CP610 -A1	1 PCE	CP610:CP600-eCo, control panel, TFT grafic display, touchscreen, 10.1", 1024x600 pixel, CP610 Control Panel 10.1" TFT touch screen, 64 K colors, 1024x600 pixel, PB610-B runtime license	CP610 1SAP510100R0001	ABB	ABB.1SAP510100R0001

-A1

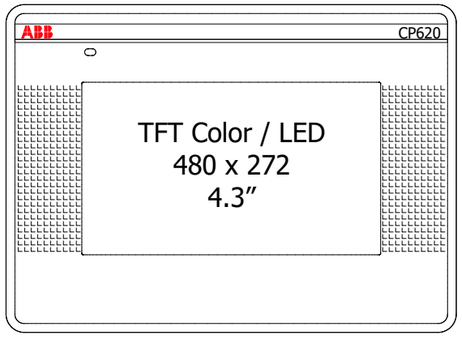

ABB\CP620.ema
CP620 Control Panel 4.3" TFT touch screen,
64 K colors, 480 x 272 pixel, PB610 runtime license
Version 03/2017
Allpolig
Variante A

0	1	2	3	4	5	6	7	8	9

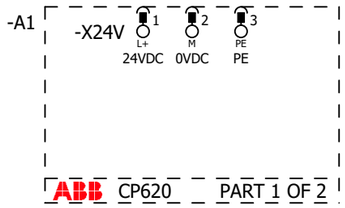

ABB\CP620.ema
CP620 Control Panel 4.3" TFT touch screen,
64 K colors, 480 x 272 pixel, PB610 runtime license
Version 03/2017
Allpolig
Variante B

0	1	2	3	4	5	6	7	8	9

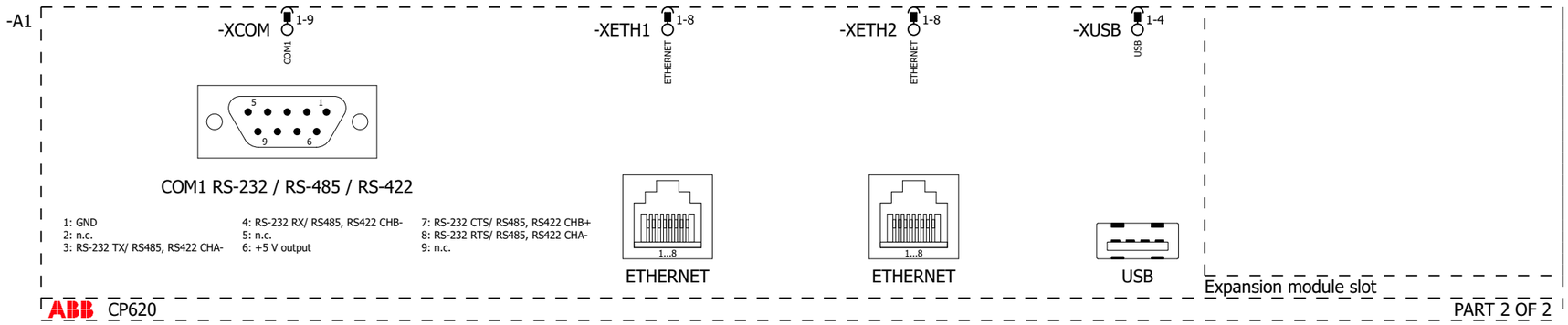

Ethernet Netzwerkadresse:

???.???.???.???

ABB\CP620.ema
CP620 Control Panel 4.3" TFT touch screen,
64 K colors, 480 x 272 pixel, PB610 runtime license
Version 03/2017
Einpolig
Variante A

2 4

			Date	16.03.2017	PLC		CP620	== ABB	Page 71
			Ed.	TGO				= CP6xx	from 182
			Appr					++	
Modification	Date	Name	Original		Replacement of	Replaced by		+ CP620	Page 3

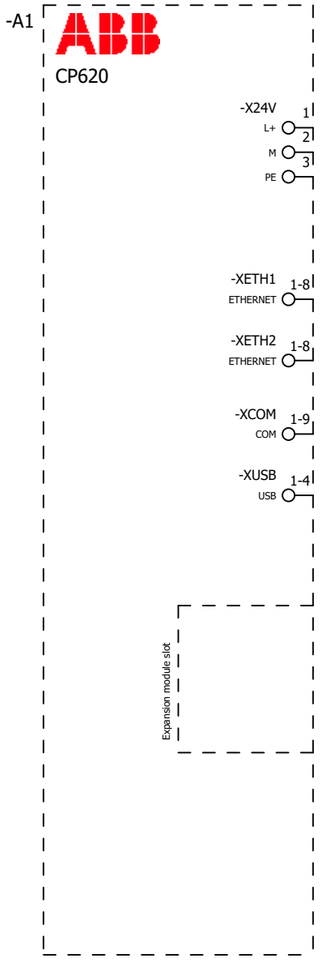

ABB\CP620.ema
CP620 Control Panel 4.3" TFT touch screen,
64 K colors, 480 x 272 pixel, PB610 runtime license
Version 03/2017
Übersicht
Variante A

-A1
ABB.1SAP520100R0001
CP620
1

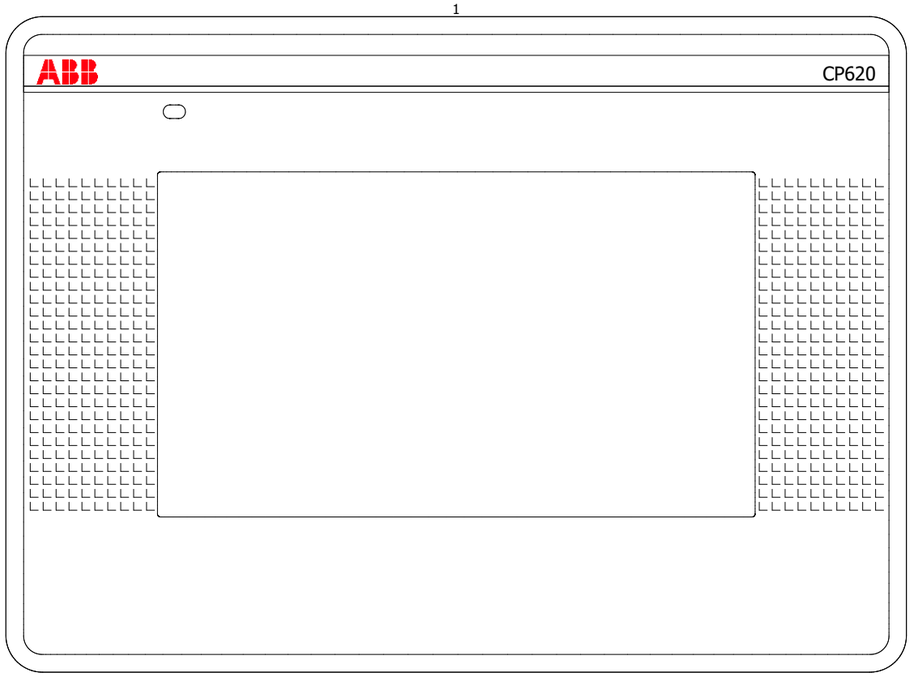

ABB\CP620.ema
CP620 Control Panel 4.3" TFT touch screen,
64 K colors, 480 x 272 pixel, PB610 runtime license
Version 03/2017
Schaltschrankaufbau
Variante A

Parts list

device tag	Quantity QU	Designation 1 Description Technical characteristics	Type number Order number	manufacturer supplier	part number function text
==ABB =CP6xx +CP620 -A1	1 PCE	CP620:CP600, control panel, TFT grafic display, touchscreen, 4.3", 480 x 272 pixel, PB610 CP620 Control Panel 4.3" TFT touch screen, 64 K colors, 480 x 272 pixel, PB610 runtime license	CP620 1SAP520100R0001	ABB	ABB.1SAP520100R0001

-A1

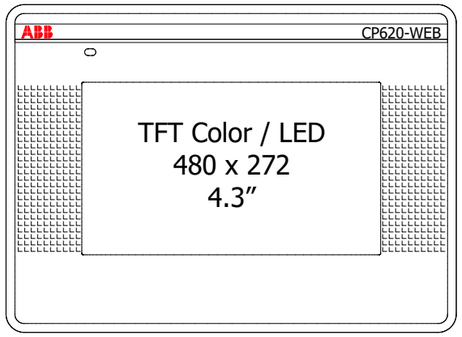

ABB\CP620-WEB.ema
CP620-WEB Control Panel 4.3" TFT touch screen,
64 K colors, 480 x 272 pixel, microbrowser
Version 03/2017
Allpolig
Variante A

0	1	2	3	4	5	6	7	8	9

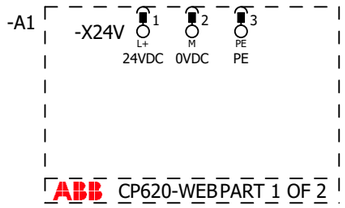

ABB\CP620-WEB.ema
CP620-WEB Control Panel 4.3" TFT touch screen,
64 K colors, 480 x 272 pixel, microbrowser
Version 03/2017
Allpolig
Variante B

0	1	2	3	4	5	6	7	8	9

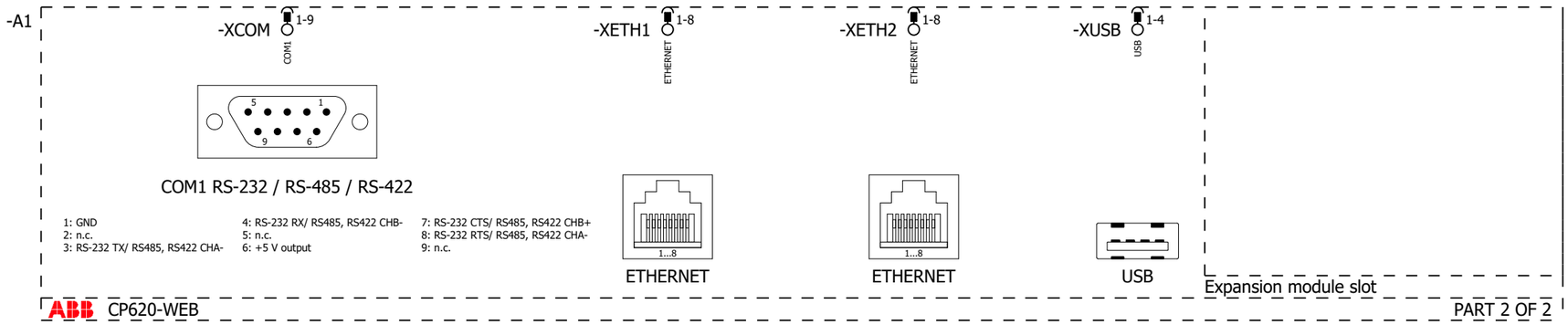

Ethernet Netzwerkadresse:

???.???.???.???

ABB\CP620-WEB.ema
CP620-WEB Control Panel 4.3" TFT touch screen,
64 K colors, 480 x 272 pixel, microbrowser
Version 03/2017
Einpolig
Variante A

2 4

			Date	16.03.2017	PLC		CP620-WEB	== ABB	Page	77
			Ed.	TGO				= CP6xx	from	182
			Appr					++		
Modification	Date	Name	Original		Replacement of	Replaced by		+ CP620-WEB	Page	3

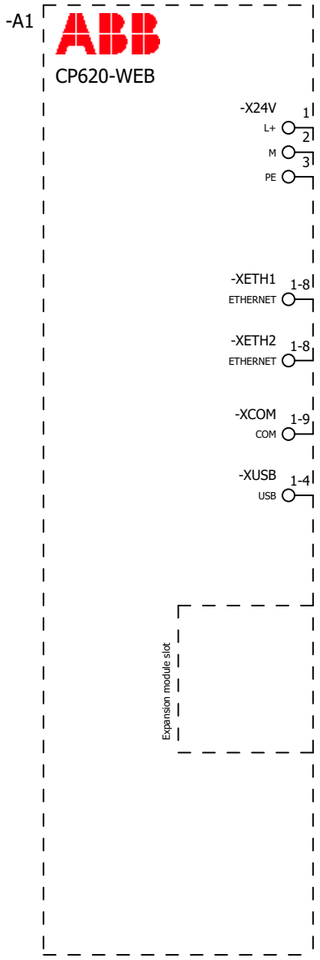

ABB\CP620-WEB.ema
CP620-WEB Control Panel 4.3" TFT touch screen,
64 K colors, 480 x 272 pixel, microbrowser
Version 03/2017
Übersicht
Variante A

-A1
ABB.1SAP520200R0001
CP620-WEB
1

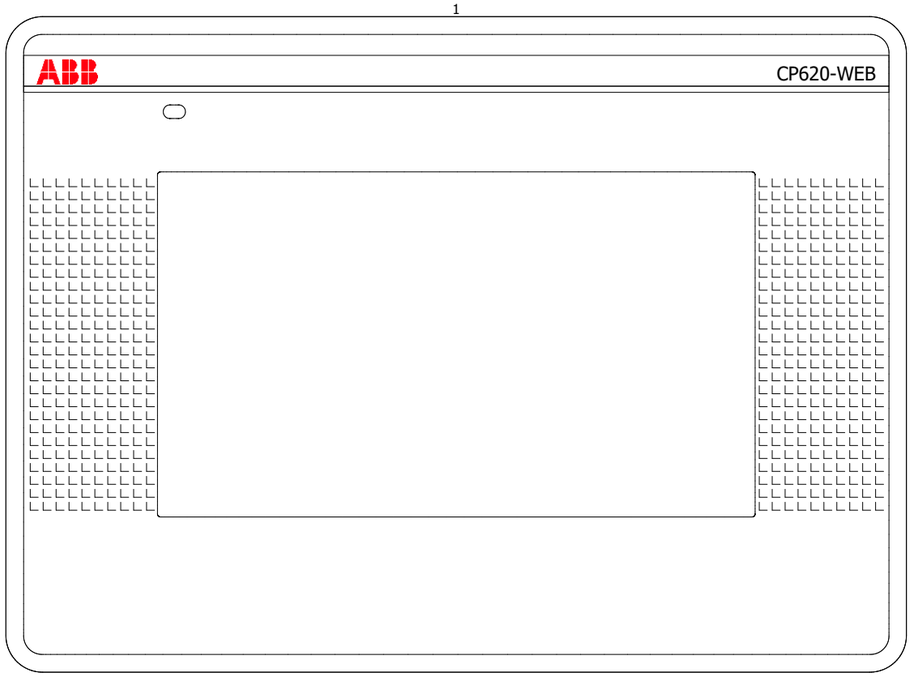

ABB\CP620-WEB.ema
CP620-WEB Control Panel 4.3" TFT touch screen,
64 K colors, 480 x 272 pixel, microbrowser
Version 03/2017
Schaltschrankaufbau
Variante A

Parts list

device tag	Quantity QU	Designation 1 Description Technical characteristics	Type number Order number	manufacturer supplier	part number function text
==ABB =CP6xx +CP620-WEB -A1	1 PCE	CP620-WEB:CP600, control panel,TFT grafic display, touchscreen, 4.3", 480 x 272 pixel, CP620-WEB Control Panel 4.3" TFT touch screen, 64 K colors, 480 x 272 pixel, microbrowser	CP620-WEB 1SAP520200R0001	ABB	ABB.1SAP520200R0001

-A1

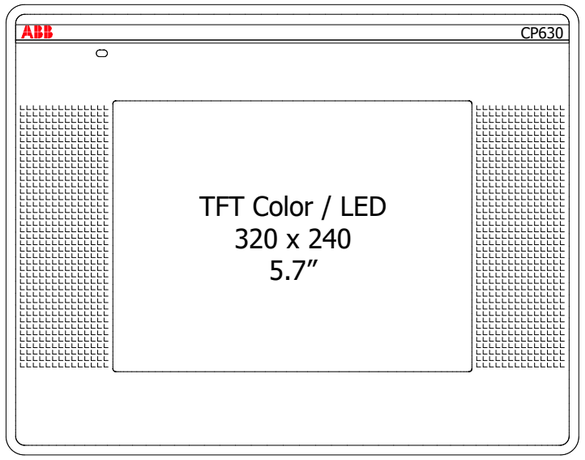

ABB\CP630.ema
CP630 Control Panel 5.7" TFT touch screen,
64 K colors, 320 x 240 pixel, PB610 runtime license
Version 03/2017
Allpolig
Variante A

0	1	2	3	4	5	6	7	8	9

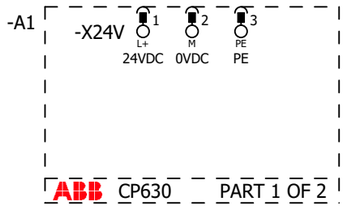

ABB\CP630.ema
CP630 Control Panel 5.7" TFT touch screen,
64 K colors, 320 x 240 pixel, PB610 runtime license
Version 03/2017
Allpolig
Variante B

0	1	2	3	4	5	6	7	8	9

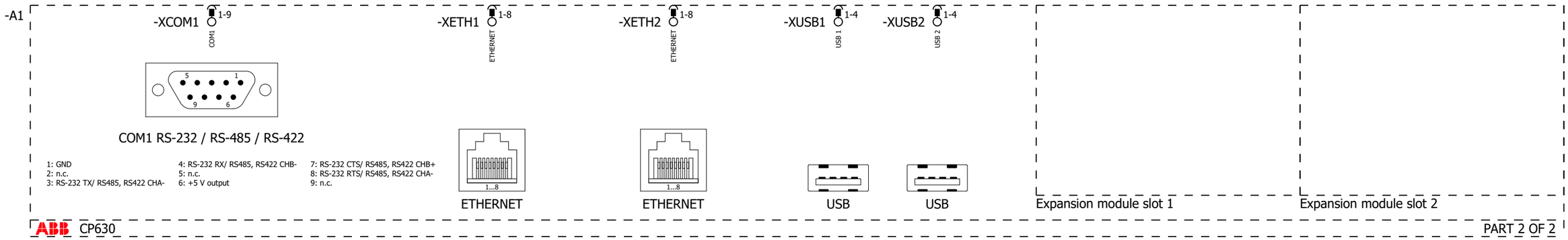

Ethernet Netzwerkadresse:

???.???.???.???

ABB\CP630.ema
CP630 Control Panel 5.7" TFT touch screen,
64 K colors, 320 x 240 pixel, PB610 runtime license
Version 03/2017
Einpolig
Variante A

2 4

			Date	16.03.2017	PLC		CP630	== ABB	Page 83
			Ed.	TGO				= CP6xx	from 182
			Appr					++	
Modification	Date	Name	Original		Replacement of	Replaced by		+ CP630	Page 3

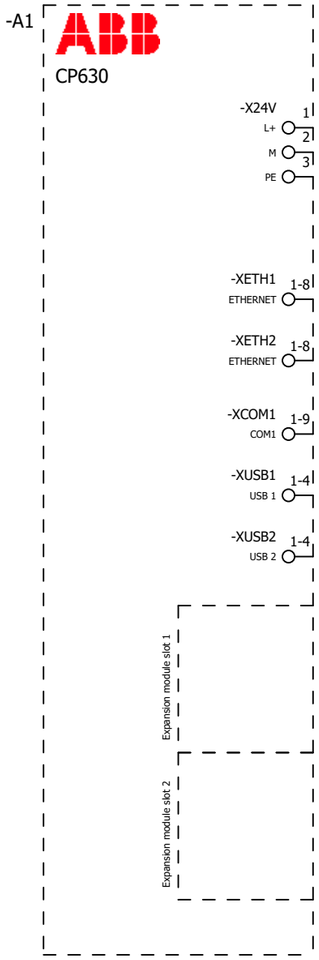

ABB\CP630.ema
CP630 Control Panel 5.7" TFT touch screen,
64 K colors, 320 x 240 pixel, PB610 runtime license
Version 03/2017
Übersicht
Variante A

-A1
ABB.1SAP530100R0001
CP630
1

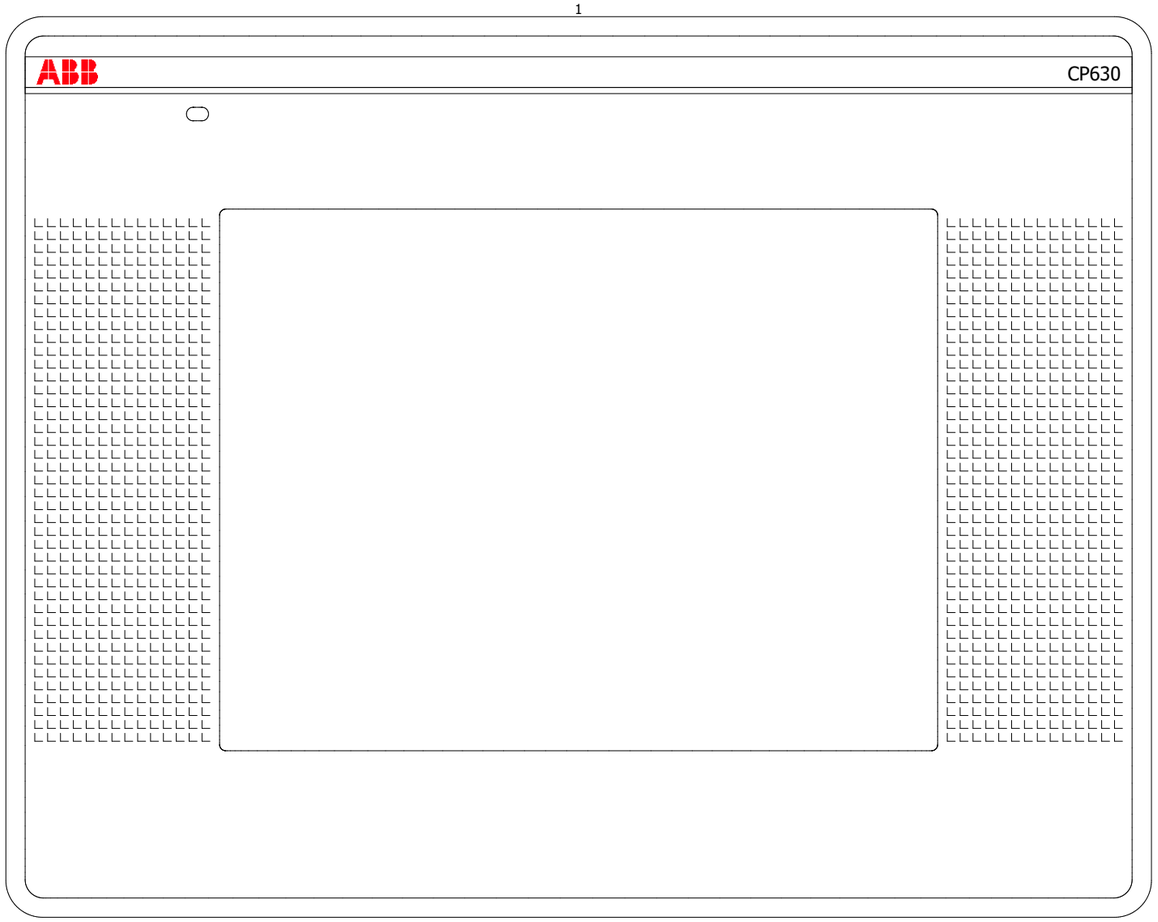

ABB\CP630.ema
CP630 Control Panel 5.7" TFT touch screen,
64 K colors, 320 x 240 pixel, PB610 runtime license
Version 03/2017
Schaltschrankaufbau
Variante A

Parts list

device tag	Quantity QU	Designation 1 Description Technical characteristics	Type number Order number	manufacturer supplier	part number function text
==ABB =CP6xx +CP630 -A1	1 PCE	CP630:CP600, control panel, TFT grafic display, touchscreen, 5.7", 320 x 240 pixel, PB610 CP630 Control Panel 5.7" TFT touch screen, 64 K colors, 320 x 240 pixel, PB610 runtime license	CP630 1SAP530100R0001	ABB	ABB.1SAP530100R0001

-A1

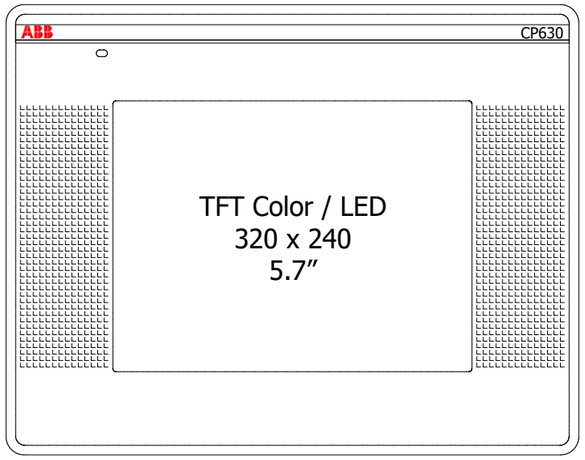

ABB\CP630-WEB.ema
CP630-WEB Control Panel 5.7" TFT touch screen,
64 K colors, 320 x 240 pixel, microbrowser
Version 03/2017
Allpolig
Variante A

0	1	2	3	4	5	6	7	8	9

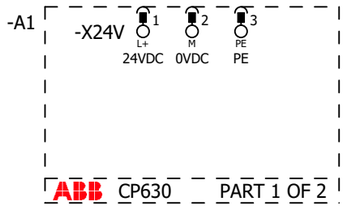

ABB\CP630-WEB.ema
CP630-WEB Control Panel 5.7" TFT touch screen,
64 K colors, 320 x 240 pixel, microbrowser
Version 03/2017
Allpolig
Variante B

0	1	2	3	4	5	6	7	8	9

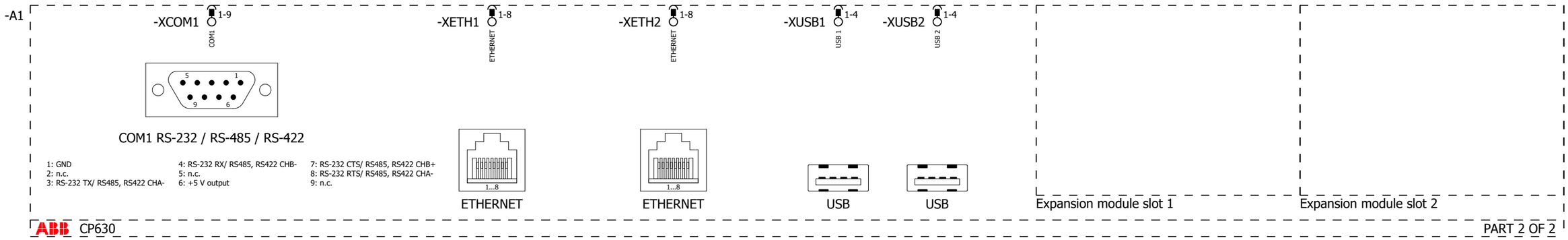

Ethernet Netzwerkadresse:

???.???.???.???

ABB\CP630-WEB.ema
CP630-WEB Control Panel 5.7" TFT touch screen,
64 K colors, 320 x 240 pixel, microbrowser
Version 03/2017
Einpolig
Variante A

2 4

			Date	16.03.2017	PLC		CP630-WEB	== ABB	Page 89
			Ed.	TGO				= CP6xx	from 182
			Appr					++	
Modification	Date	Name	Original		Replacement of	Replaced by		+ CP630-WEB	Page 3

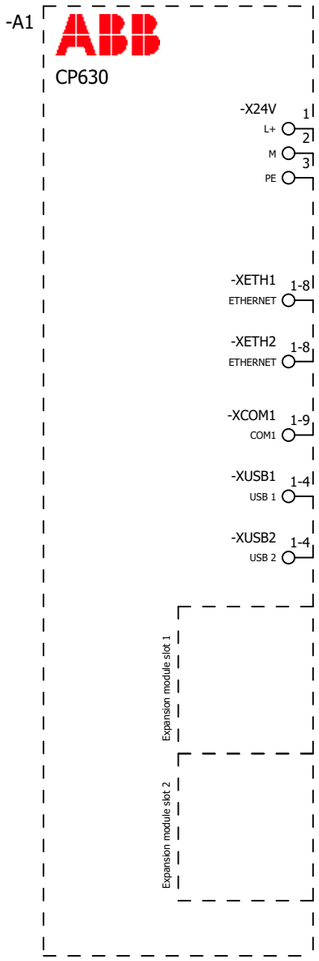

ABB\CP630-WEB.ema
CP630-WEB Control Panel 5.7" TFT touch screen,
64 K colors, 320 x 240 pixel, microbrowser
Version 03/2017
Übersicht
Variante A

-A1
ABB.1SAP530200R0001
CP630-WEB
1

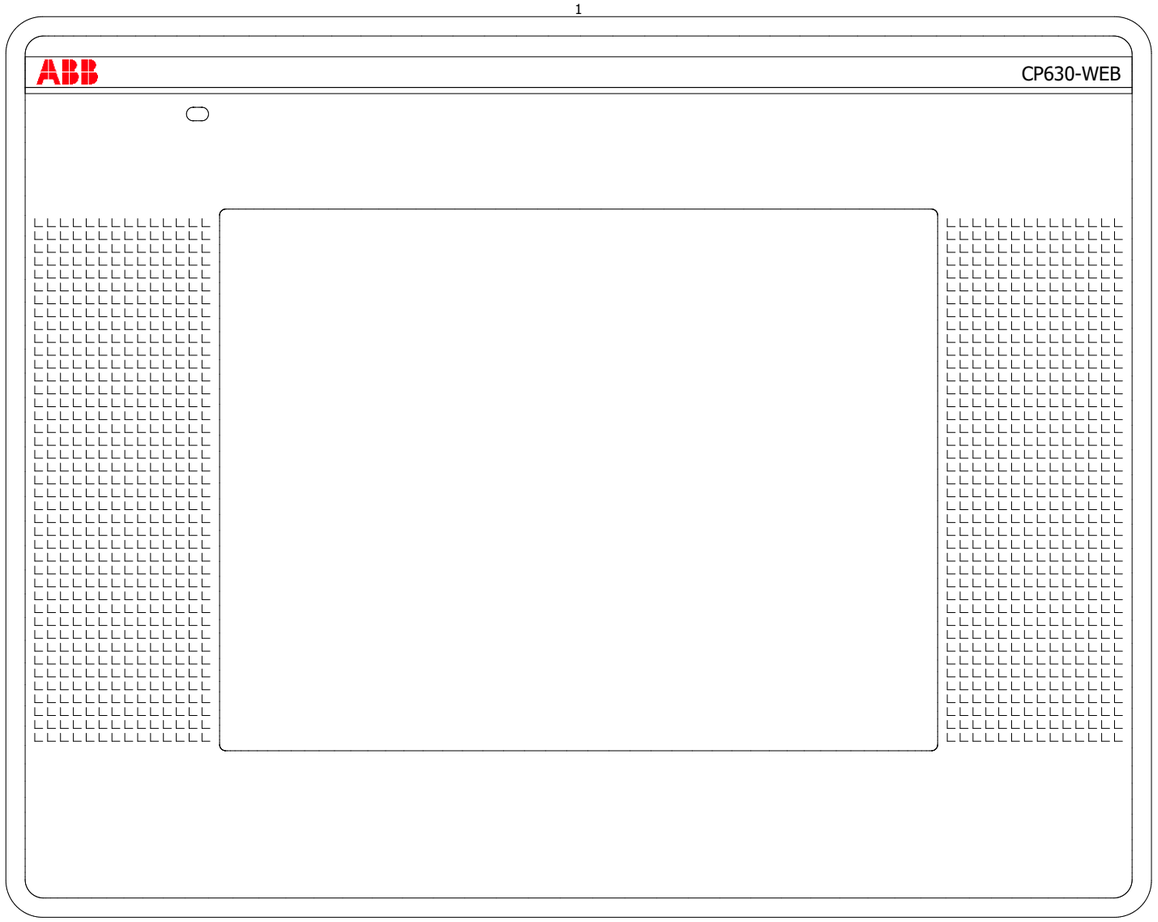

ABB\CP630-WEB.ema
CP630-WEB Control Panel 5.7" TFT touch screen,
64 K colors, 320 x 240 pixel, microbrowser
Version 03/2017
Schaltschrankaufbau
Variante A

Parts list

device tag	Quantity QU	Designation 1 Description Technical characteristics	Type number Order number	manufacturer supplier	part number function text
==ABB =CP6xx +CP630-WEB -A1	1 PCE	CP630-WEB:CP600, control panel, TFT grafic display, touchscreen, 5.7", 320 x 240 pixel, CP630-WEB Control Panel 5.7" TFT touch screen, 64 K colors, 320 x 240 pixel, microbrowser	CP630-WEB 1SAP530200R0001	ABB	ABB.1SAP530200R0001

-A1

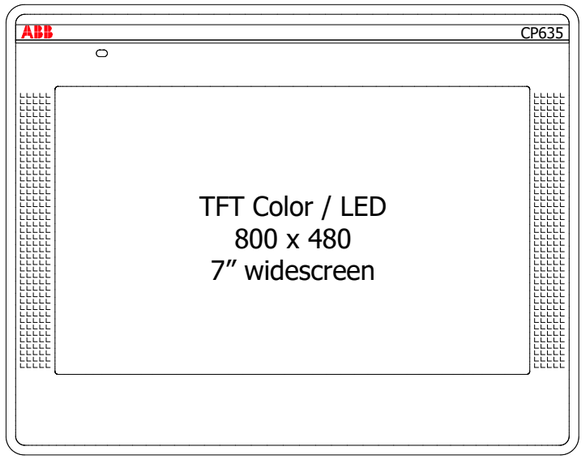

ABB\CP635.ema
CP635 Control Panel 7" TFT touch screen,
64 K colors, 800 x 480 pixel, PB610 runtime license
Version 03/2017
Allpolig
Variante A

0	1	2	3	4	5	6	7	8	9

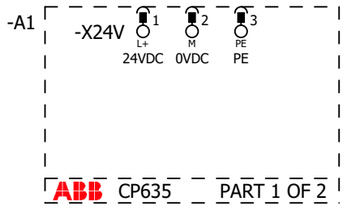

ABB\CP635.ema
CP635 Control Panel 7" TFT touch screen,
64 K colors, 800 x 480 pixel, PB610 runtime license
Version 03/2017
Allpolig
Variante B

0	1	2	3	4	5	6	7	8	9

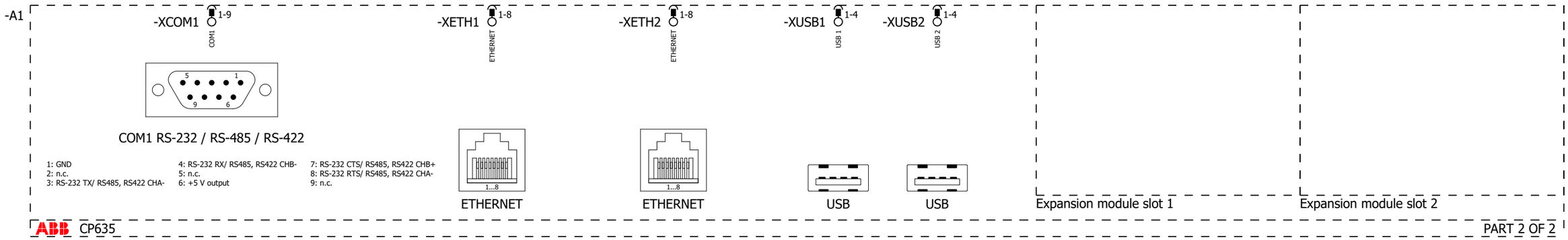

Ethernet Netzwerkadresse:

???.???.???.???

ABB\CP635.ema
CP635 Control Panel 7" TFT touch screen,
64 K colors, 800 x 480 pixel, PB610 runtime license
Version 03/2017
Einpolig
Variante A

2 4

			Date	16.03.2017	PLC		CP635	== ABB	Page 95
			Ed.	TGO				= CP6xx	from 182
			Appr					++	
Modification	Date	Name	Original		Replacement of	Replaced by		+ CP635	Page 3

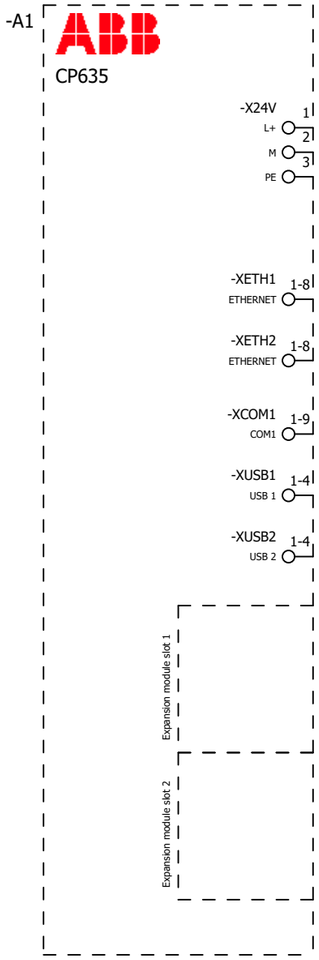

ABB\CP635.ema
CP635 Control Panel 7" TFT touch screen,
64 K colors, 800 x 480 pixel, PB610 runtime license
Version 03/2017
Übersicht
Variante A

			Date	16.03.2017	PLC		CP635	== ABB	Page	96
			Ed.	TGO				= CP6xx	from	182
			Appr					++		
Modification	Date	Name	Original		Replacement of	Replaced by		+ CP635	Page	4

-A1
ABB.1SAP535100R0001
CP635
1

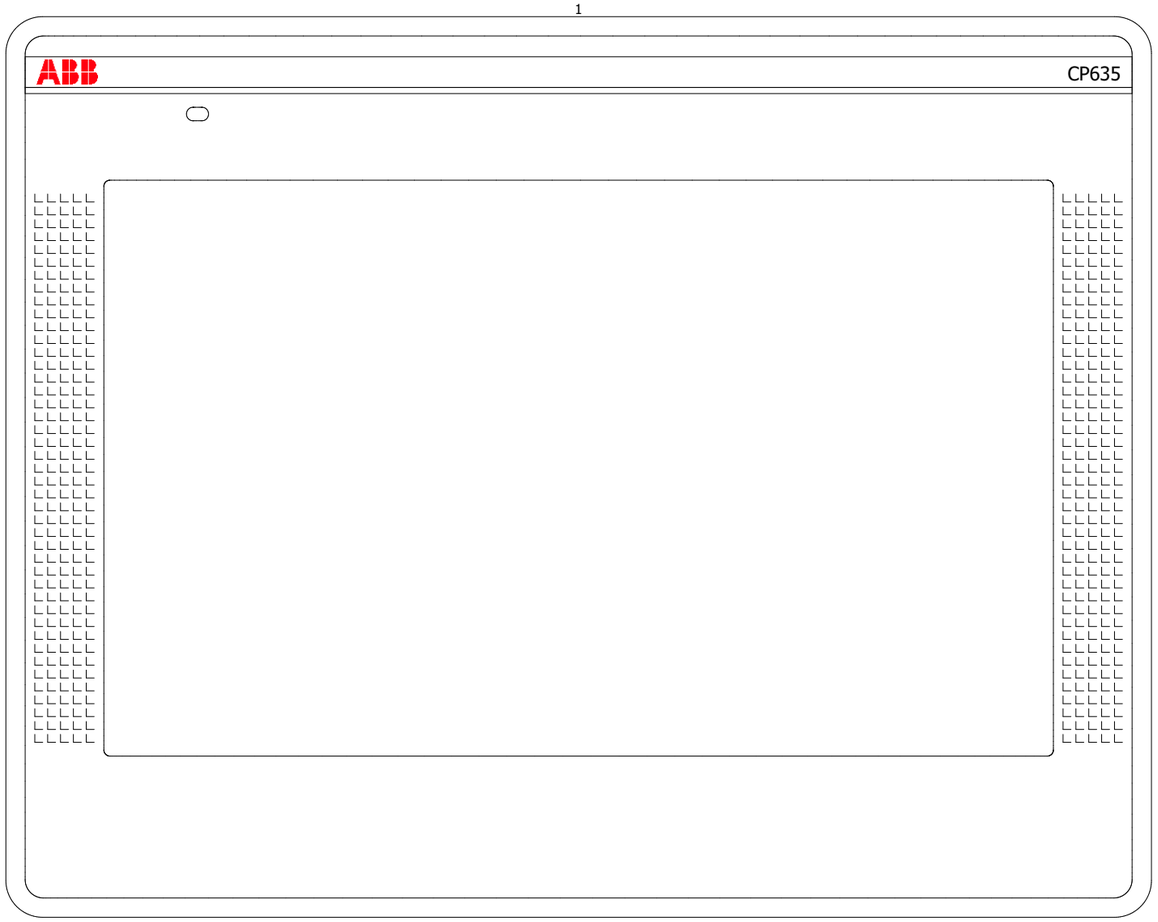

ABB\CP635.ema
CP635 Control Panel 7" TFT touch screen,
64 K colors, 800 x 480 pixel, PB610 runtime license
Version 03/2017
Schaltschrankaufbau
Variante A

Parts list

device tag	Quantity QU	Designation 1 Description Technical characteristics	Type number Order number	manufacturer supplier	part number function text
==ABB =CP6xx +CP635 -A1	1 PCE	CP635:CP600, control panel, TFT grafic display, touchscreen, 7", 800 x 480 pixel, PB610 CP635 Control Panel 7" TFT touch screen, 64 K colors, 800 x 480 pixel, PB610 runtime license	CP635 1SAP535100R0001	ABB	ABB.1SAP535100R0001

-A1

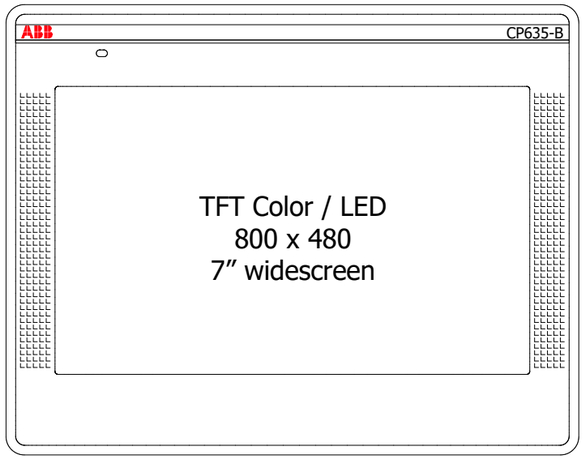

ABB\CP635-B.ema
CP635 Control Panel 7" TFT touch screen,
black, 64 K colors, 800 x 480 pixel, PB610 runtime license
Version 03/2017
Allpolig
Variante A

0	1	2	3	4	5	6	7	8	9

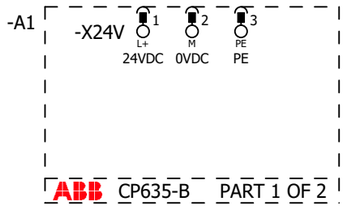

ABB\CP635-B.ema
CP635 Control Panel 7" TFT touch screen,
black, 64 K colors, 800 x 480 pixel, PB610 runtime license
Version 03/2017
Allpolig
Variante B

0	1	2	3	4	5	6	7	8	9

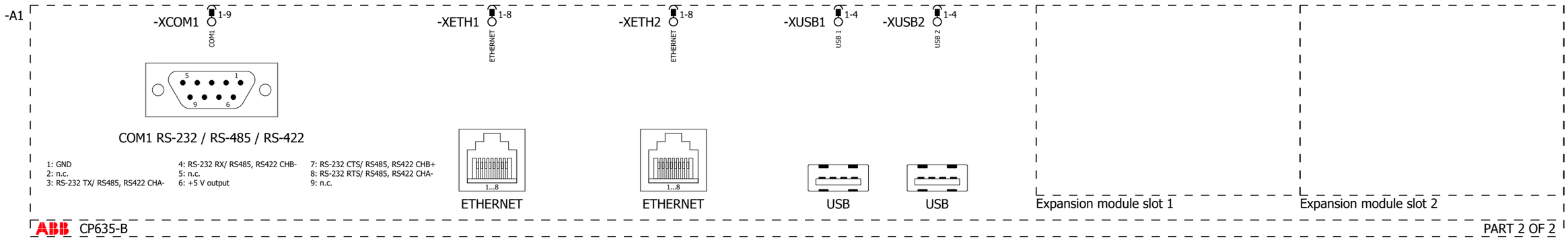

Ethernet Netzwerkadresse:

???.???.???.???

ABB\CP635-B.ema
CP635 Control Panel 7" TFT touch screen,
black, 64 K colors, 800 x 480 pixel, PB610 runtime license
Version 03/2017
Einpolig
Variante A

2 4

			Date	16.03.2017	PLC		CP635-B	== ABB	Page 101
			Ed.	TGO				= CP6xx	from 182
			Appr					++	
Modification	Date	Name	Original		Replacement of	Replaced by		+ CP635-B	Page 3

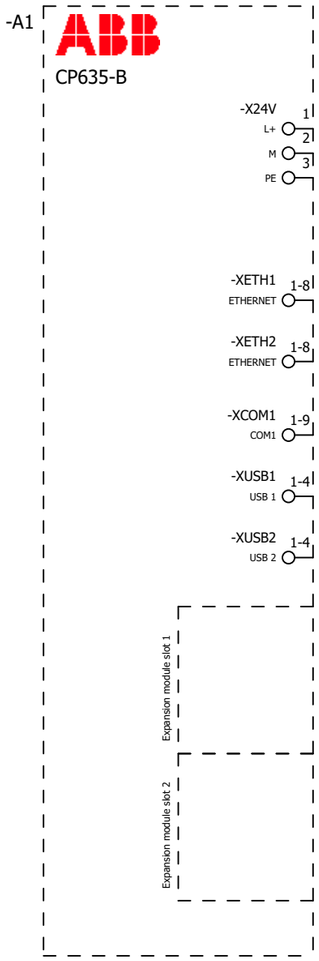

ABB\CP635-B.ema
CP635 Control Panel 7" TFT touch screen,
black, 64 K colors, 800 x 480 pixel, PB610 runtime license
Version 03/2017
Übersicht
Variante A

-A1
ABB.1SAP535100R2001
CP635-B
1

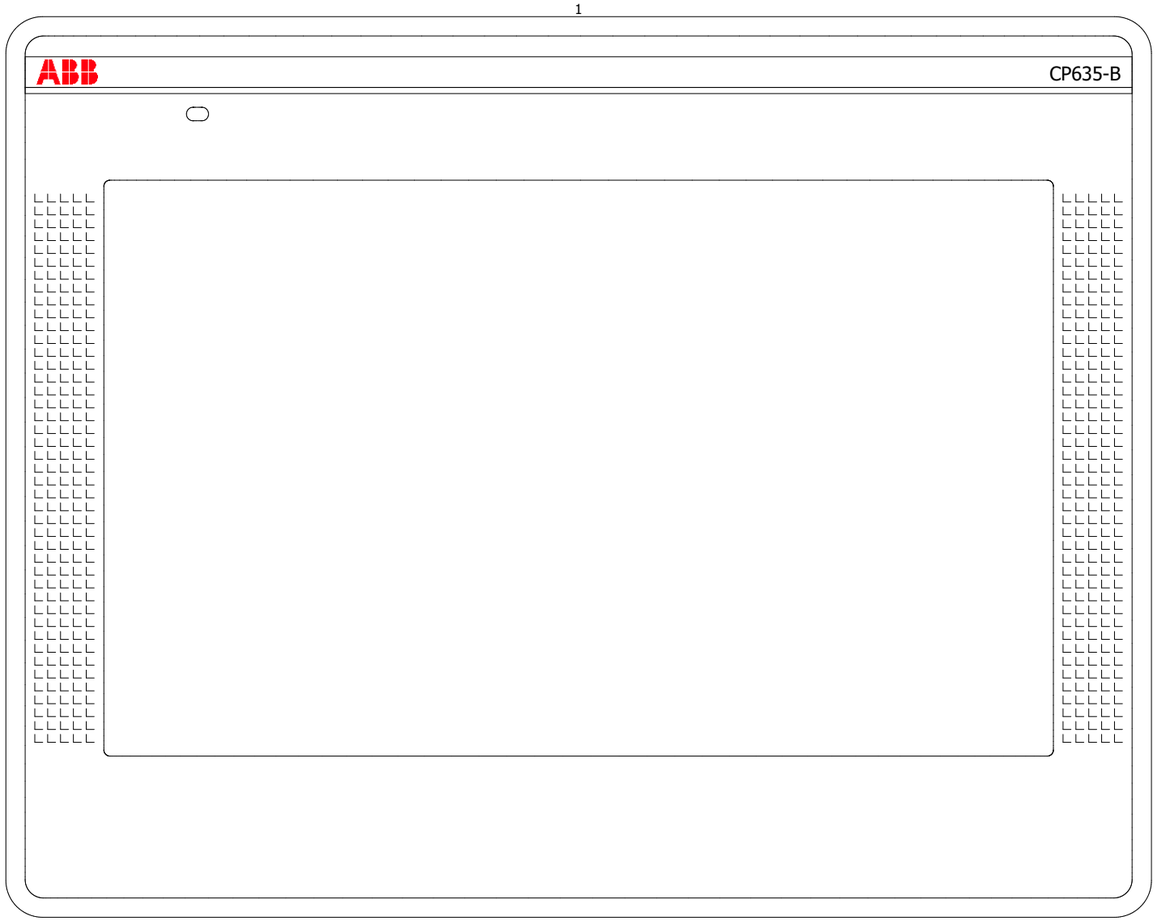

ABB\CP635-B.ema
CP635 Control Panel 7" TFT touch screen,
black, 64 K colors, 800 x 480 pixel, PB610 runtime license
Version 03/2017
Schaltschrankaufbau
Variante A

Parts list

device tag	Quantity QU	Designation 1 Description Technical characteristics	Type number Order number	manufacturer supplier	part number function text
==ABB =CP6xx +CP635-B -A1	1 PCE	CP635:CP600, control panel, black, TFT grafic display, touchscreen, 7", 800 x 480 pixel, CP635 Control Panel 7" TFT touch screen, black, 64 K colors, 800 x 480 pixel, PB610 runtime license	CP635-B 1SAP535100R2001	ABB	ABB.1SAP535100R2001

-A1

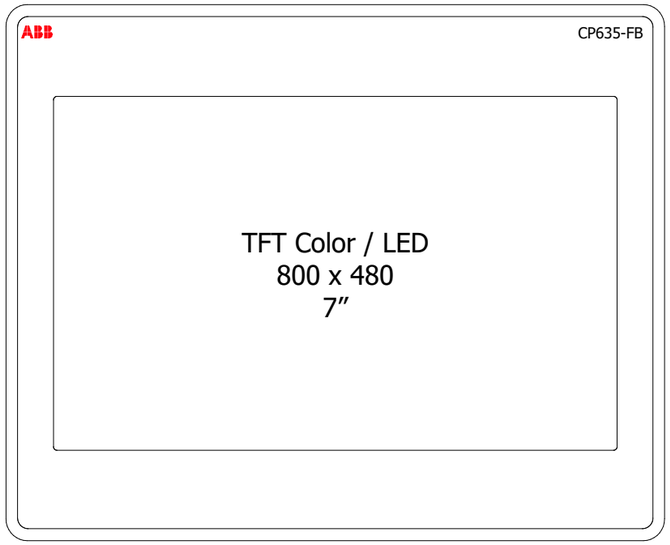

ABB\CP635-FB.ema
CP635-FB:
CP600, control panel,blue,IP69K,
TFT color-touchscreen, 7",
800 x 480 pixel, PB610 runtime
Version 03/2017
Allpolig
Variante A

0	1	2	3	4	5	6	7	8	9

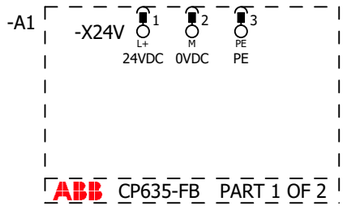

ABB\CP635-FB.ema
CP635-FB:
CP600, control panel,blue,IP69K,
TFT color-touchscreen, 7",
800 x 480 pixel, PB610 runtime
Version 03/2017
Allpolig
Variante B

0	1	2	3	4	5	6	7	8	9

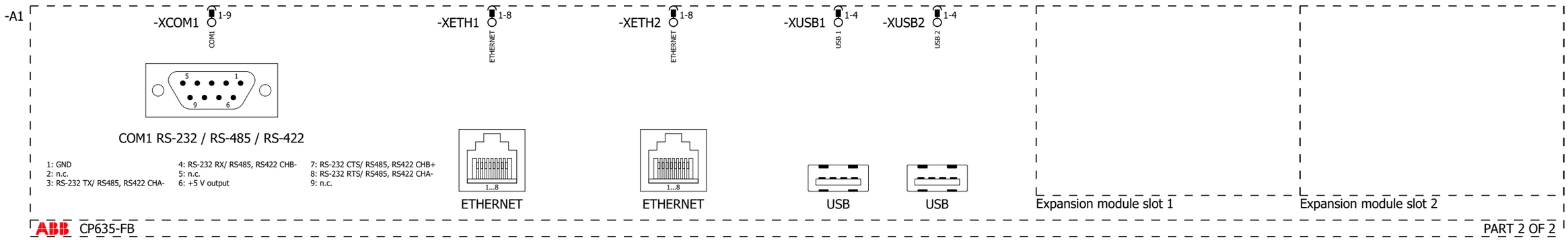

Ethernet Netzwerkadresse:

???.???.???.???

ABB\CP635-FB.ema
CP635-FB:
CP600, control panel,blue,IP69K,
TFT color-touchscreen, 7",
800 x 480 pixel, PB610 runtime
Version 03/2017
Einpolig
Variante A

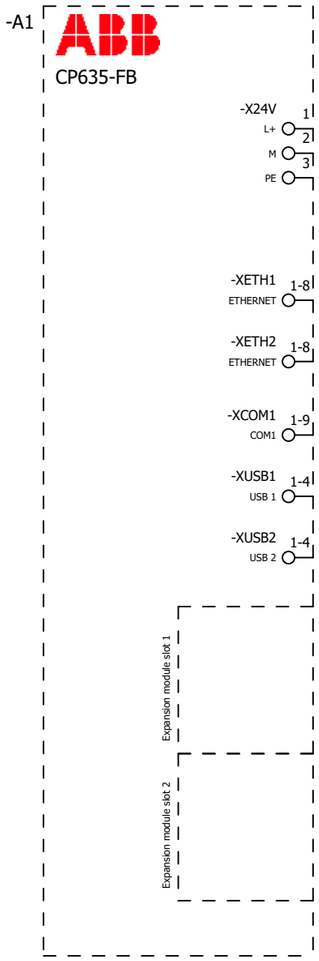

ABB\CP635-FB.ema
CP635-FB:
CP600, control panel,blue,IP69K,
TFT color-touchscreen, 7",
800 x 480 pixel, PB610 runtime
Version 03/2017
Übersicht
Variante A

-A1
ABB.1SAP535110R6001
CP635-FB
1

ABB\CP635-FB.ema
CP635-FB:
CP600, control panel,blue,IP69K,
TFT color-touchscreen, 7",
800 x 480 pixel, PB610 runtime
Version 03/2017
Schaltschrankaufbau
Variante A

Parts list

device tag	Quantity QU	Designation 1 Description Technical characteristics	Type number Order number	manufacturer supplier	part number function text
==ABB =CP6xx +CP635-FB -A1	1 PCE	CP635-FB:CP600, control panel,blue,IP69K,TFT color-touchscreen, 7", 800 x 480 pixel, CP635-FB:CP600, control panel,blue,IP69K,TFT color-touchscreen, 7", 800 x 480 pixel, PB610 runtime	CP635-FB 1SAP535110R6001	ABB	ABB.1SAP535110R6001

-A1

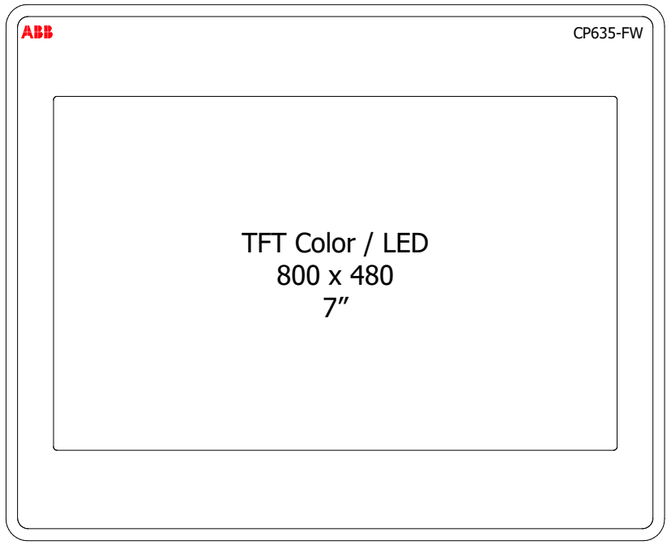

ABB\CP635-FW.ema
CP635-FW:
CP600, control panel,white,IP69K,
TFT color-touchscreen, 7",
800 x 480 pixel, PB610 runtime
Version 03/2017
Allpolig
Variante A

0	1	2	3	4	5	6	7	8	9

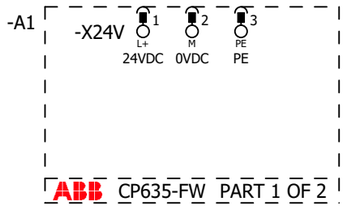

ABB\CP635-FW.ema
CP635-FW:
CP600, control panel,white,IP69K,
TFT color-touchscreen, 7",
800 x 480 pixel, PB610 runtime
Version 03/2017
Allpolig
Variante B

0	1	2	3	4	5	6	7	8	9

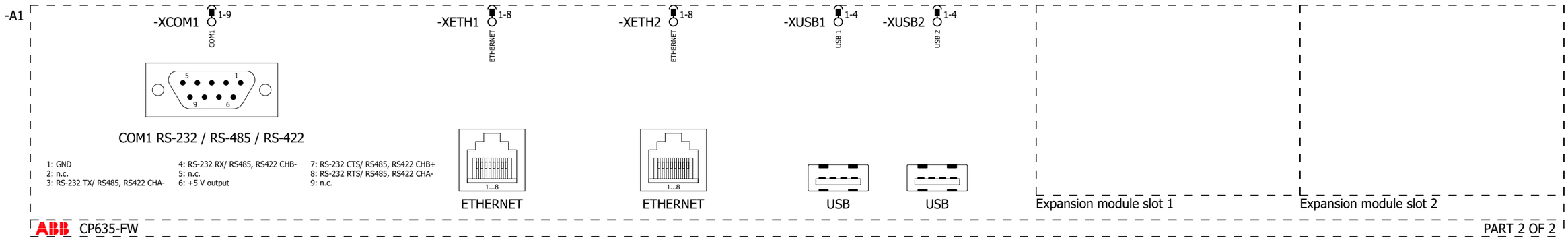

Ethernet Netzwerkadresse:

???.???.???.???

ABB\CP635-FW.ema
CP635-FW:
CP600, control panel,white,IP69K,
TFT color-touchscreen, 7",
800 x 480 pixel, PB610 runtime
Version 03/2017
Einpolig
Variante A

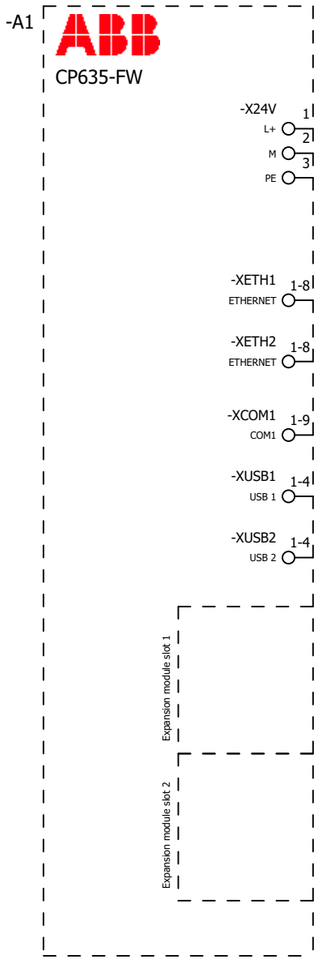

ABB\CP635-FW.ema
CP635-FW:
CP600, control panel,white,IP69K,
TFT color-touchscreen, 7",
800 x 480 pixel, PB610 runtime
Version 03/2017
Übersicht
Variante A

-A1
ABB.1SAP535110R1001
CP635-FW
1

ABB\CP635-FW.ema
CP635-FW:
CP600, control panel,white,IP69K,
TFT color-touchscreen, 7",
800 x 480 pixel, PB610 runtime
Version 03/2017
Schaltschrankaufbau
Variante A

4 6

			Date	16.03.2017	PLC		CP635-FW	== ABB	Page	115
			Ed.	TGO				= CP6xx	from	182
			Appr					++		
Modification	Date	Name	Original		Replacement of	Replaced by		+ CP635-FW	Page	5

Parts list

device tag	Quantity QU	Designation 1 Description Technical characteristics	Type number Order number	manufacturer supplier	part number function text
==ABB =CP6xx +CP635-FW -A1	1 PCE	CP635-FW:CP600, control panel,white,IP69K,TFT color-touchscreen, 7", 800 x 480 pixel, CP635-FW:CP600, control panel,white,IP69K,TFT color-touchscreen, 7", 800 x 480 pixel, PB610 runtime	CP635-FW 1SAP535110R1001	ABB	ABB.1SAP535110R1001

-A1

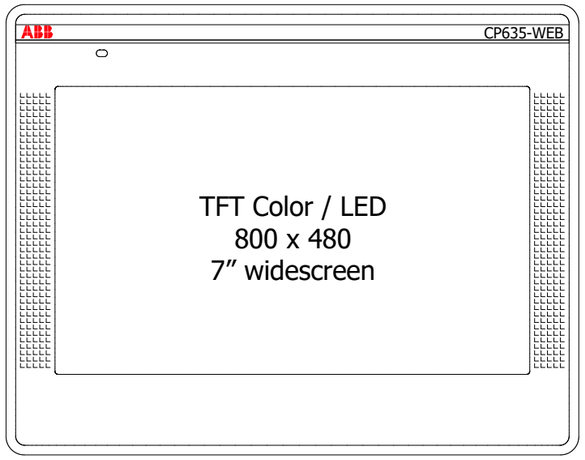

ABB\CP635-WEB.ema
CP635-WEB Control Panel 7" TFT touch screen,
64 K colors, 800 x 480 pixel, microbrowser
Version 03/2017
Allpolig
Variante A

0	1	2	3	4	5	6	7	8	9

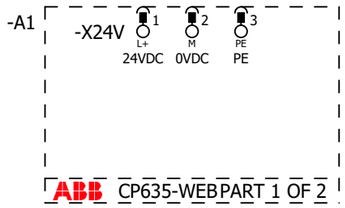

ABB\CP635-WEB.ema
CP635-WEB Control Panel 7" TFT touch screen,
64 K colors, 800 x 480 pixel, microbrowser
Version 03/2017
Allpolig
Variante B

1 3

			Date	16.03.2017	PLC		CP635-WEB	== ABB	Page 118
			Ed.	TGO				= CP6xx	from 182
			Appr					++	
Modification	Date	Name	Original		Replacement of	Replaced by		+ CP635-WEB	Page 2

0	1	2	3	4	5	6	7	8	9

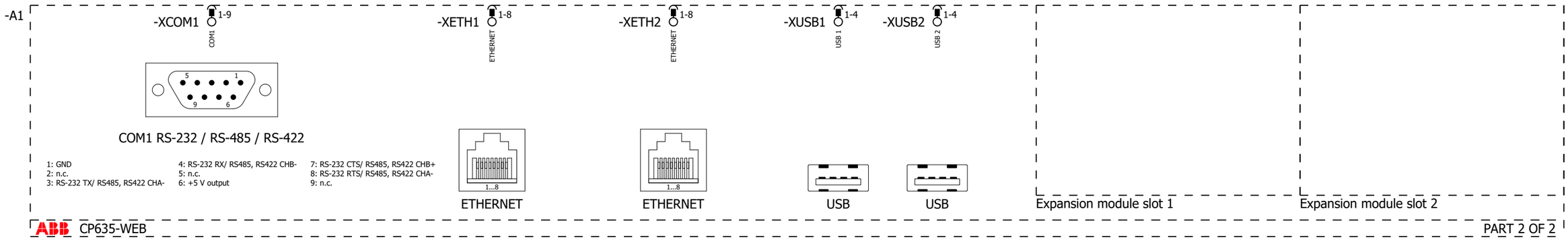

Ethernet Netzwerkadresse:

???.???.???.???

ABB\CP635-WEB.ema
CP635-WEB Control Panel 7" TFT touch screen,
64 K colors, 800 x 480 pixel, microbrowser
Version 03/2017
Einpolig
Variante A

2 4

			Date	16.03.2017	PLC		CP635-WEB	== ABB	Page 119
			Ed.	TGO				= CP6xx	from 182
			Appr					++	
Modification	Date	Name	Original		Replacement of	Replaced by		+ CP635-WEB	Page 3

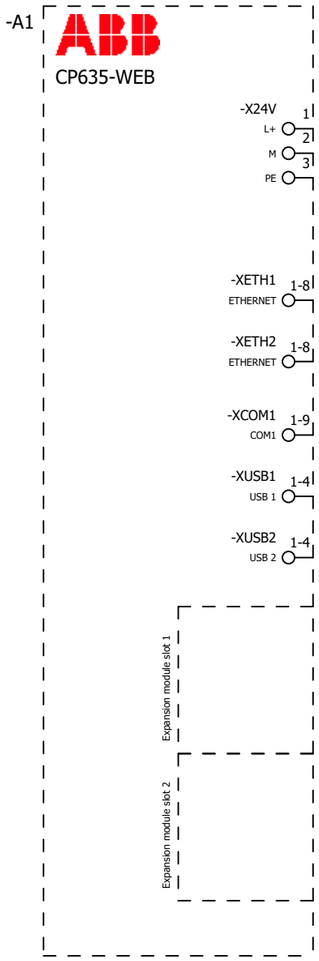

ABB\CP635-WEB.ema
CP635-WEB Control Panel 7" TFT touch screen,
64 K colors, 800 x 480 pixel, microbrowser
Version 03/2017
Übersicht
Variante A

-A1
ABB.1SAP535200R0001
CP635-WEB
1

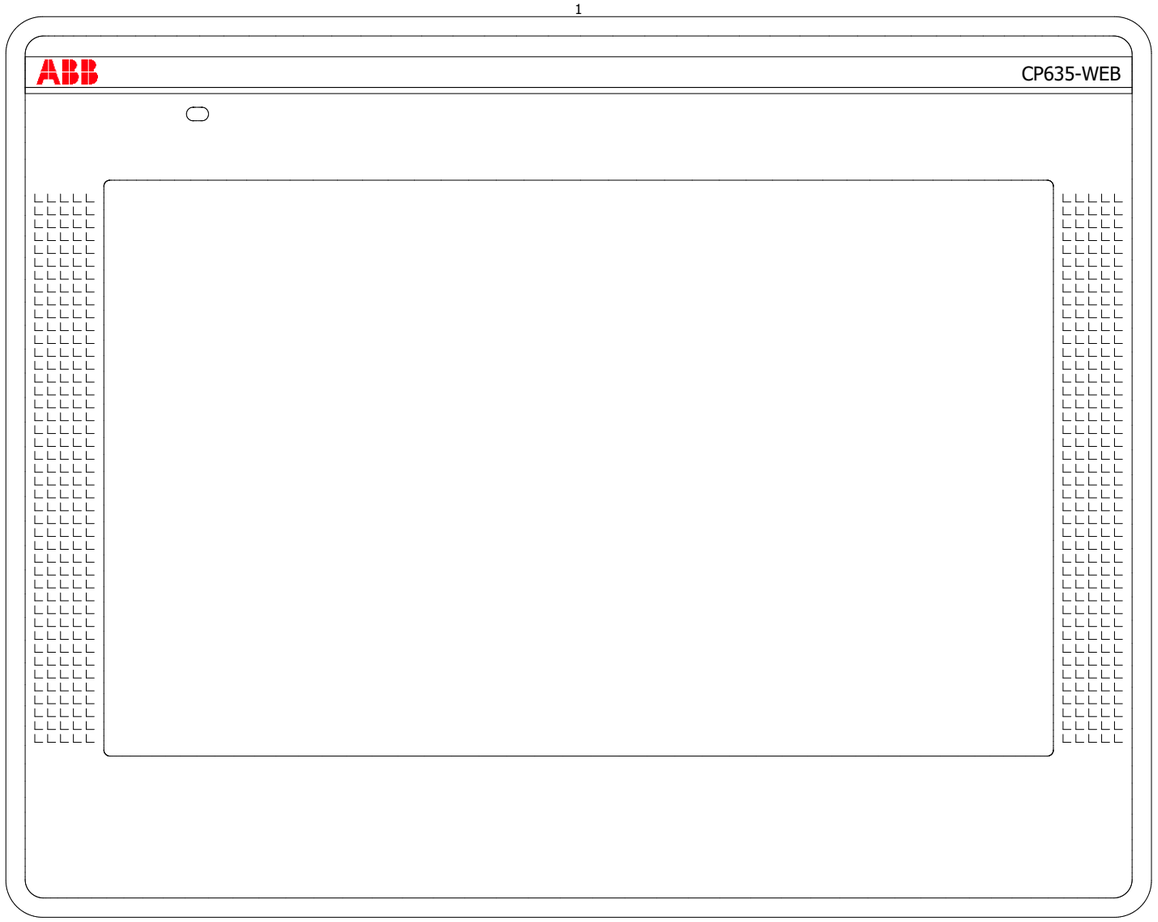

ABB\CP635-WEB.ema
CP635-WEB Control Panel 7" TFT touch screen,
64 K colors, 800 x 480 pixel, microbrowser
Version 03/2017
Schaltschrankaufbau
Variante A

Parts list

device tag	Quantity QU	Designation 1 Description Technical characteristics	Type number Order number	manufacturer supplier	part number function text
==ABB =CP6xx +CP635-WEB -A1	1 PCE	CP635-WEB:CP600, control panel, TFT grafic display, touchscreen, 7", 800 x 480 pixel, CP635-WEB Control Panel 7" TFT touch screen, 64 K colors, 800 x 480 pixel, microbrowser	CP635-WEB 1SAP535200R0001	ABB	ABB.1SAP535200R0001

-A1

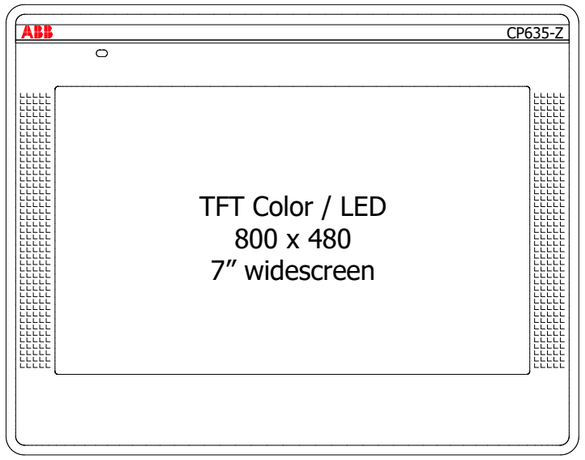

ABB\CP635-Z.ema
CP635-Z:
CP600, control panel, TFT graphic display, touchscreen, 7",
800 x 480 pixel, for ABB zenon
Version 03/2017
Allpolig
Variante A

0	1	2	3	4	5	6	7	8	9

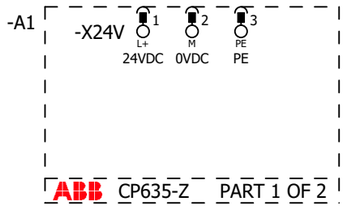

ABB\CP635-Z.ema
CP635-Z:
CP600, control panel, TFT graphic display, touchscreen, 7",
800 x 480 pixel, for ABB zenon
Version 03/2017
Allpolig
Variante B

0	1	2	3	4	5	6	7	8	9

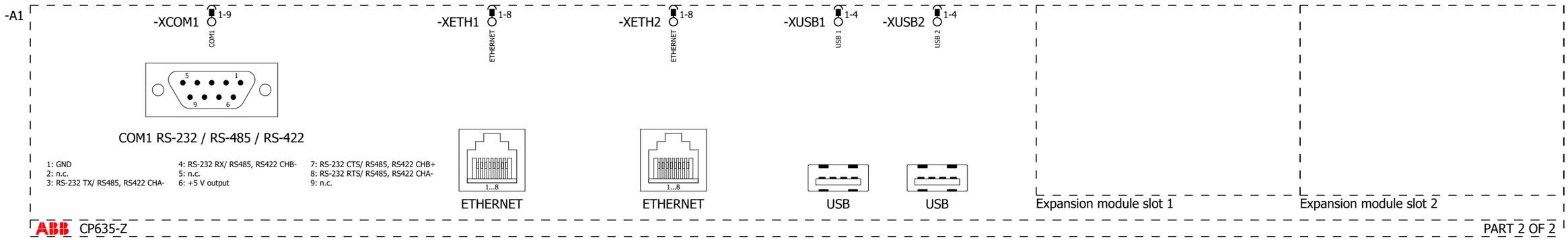

Ethernet Netzwerkadresse:

???.???.???.???

ABB\CP635-Z.ema
CP635-Z:
CP600, control panel, TFT graphic display, touchscreen, 7",
800 x 480 pixel, for ABB zenon
Version 03/2017
Einpolig
Variante A

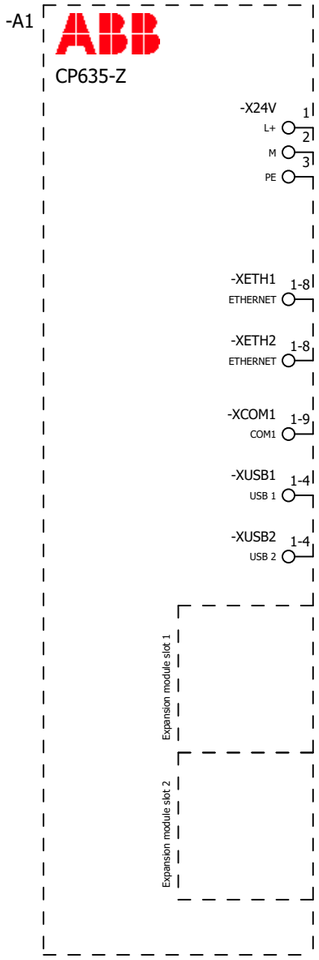

ABB\CP635-Z.ema
CP635-Z:
CP600, control panel, TFT graphic display, touchscreen, 7",
800 x 480 pixel, for ABB zenon
Version 03/2017
Übersicht
Variante A

-A1
ABB.1SAP535300R0001
CP635-Z
1

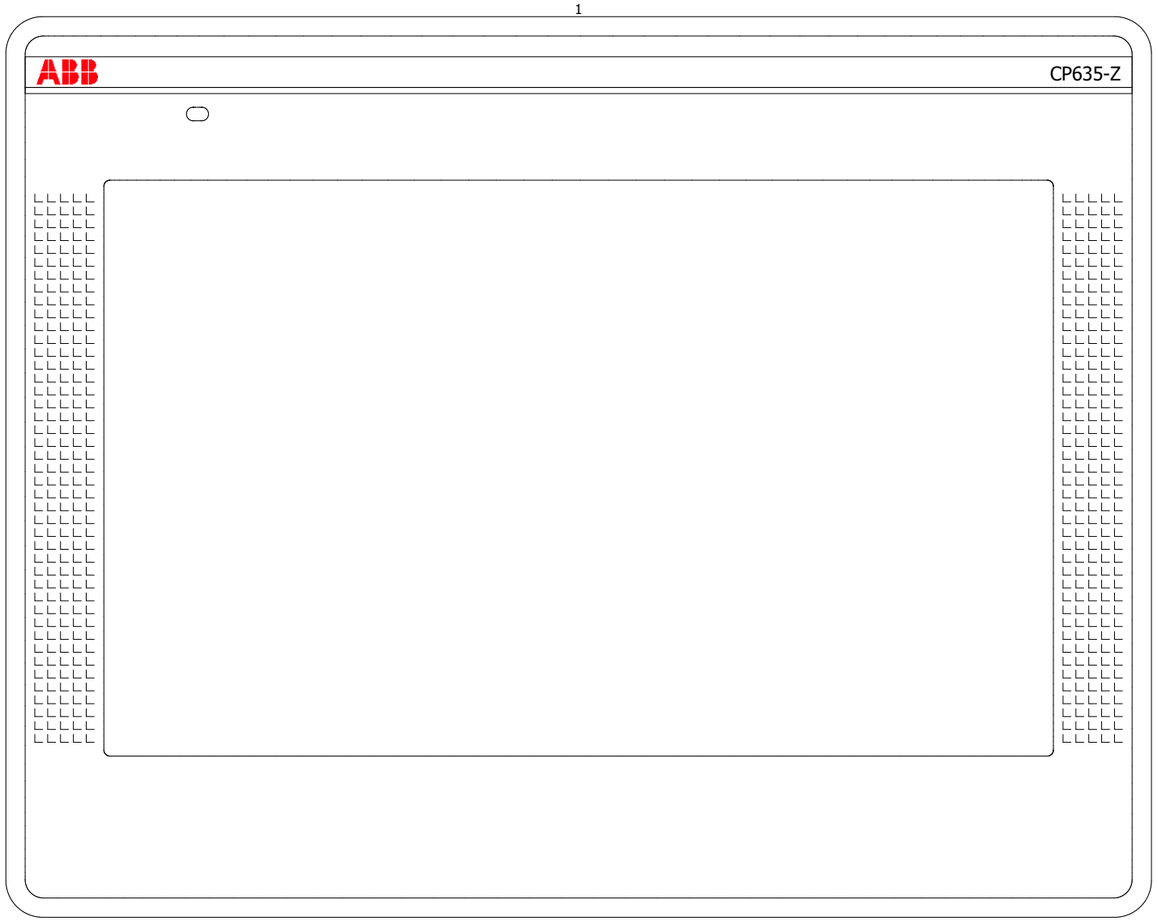

ABB\CP635-Z.ema
CP635-Z:
CP600, control panel, TFT graphic display, touchscreen, 7",
800 x 480 pixel, for ABB zenon
Version 03/2017
Schaltschrankaufbau
Variante A

			Date	16.03.2017	PLC		CP635-Z	== ABB	Page	127
			Ed.	TGO				= CP6xx	from	182
			Appr					++		
Modification	Date	Name	Original		Replacement of	Replaced by		+ CP635-Z	Page	5

Parts list

device tag	Quantity QU	Designation 1 Description Technical characteristics	Type number Order number	manufacturer supplier	part number function text
==ABB =CP6xx +CP635-Z -A1	1 PCE	CP635-Z:CP600, control panel, TFT graphic display, touchscreen, 7", 800 x 480 pixel, for CP635-Z:CP600, control panel, TFT graphic display, touchscreen, 7", 800 x 480 pixel, for ABB zenon	CP635-Z 1SAP535300R0001	ABB	ABB.1SAP535300R0001

-A1

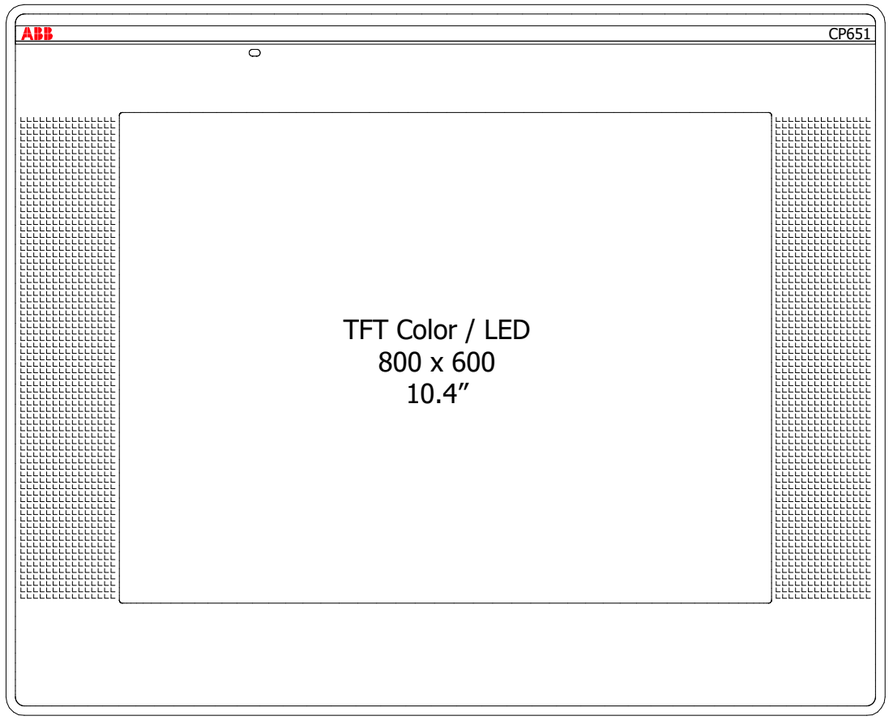

ABB\CP651.ema
CP651 Control Panel 10.4" TFT touch screen,
64 K colors, 800 x 600 pixel, PB610 runtime license
Version 03/2017
Allpolig
Variante A

0	1	2	3	4	5	6	7	8	9

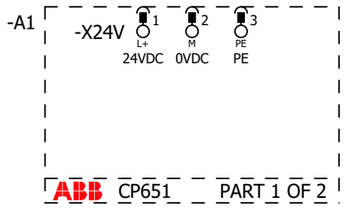

ABB\CP651.ema
CP651 Control Panel 10.4" TFT touch screen,
64 K colors, 800 x 600 pixel, PB610 runtime license
Version 03/2017
Allpolig
Variante B

1 3

			Date	16.03.2017	PLC		CP651	== ABB	Page 130
			Ed.	TGO				= CP6xx	from 182
			Appr					++	
Modification	Date	Name	Original		Replacement of	Replaced by		+ CP651	Page 2

0	1	2	3	4	5	6	7	8	9

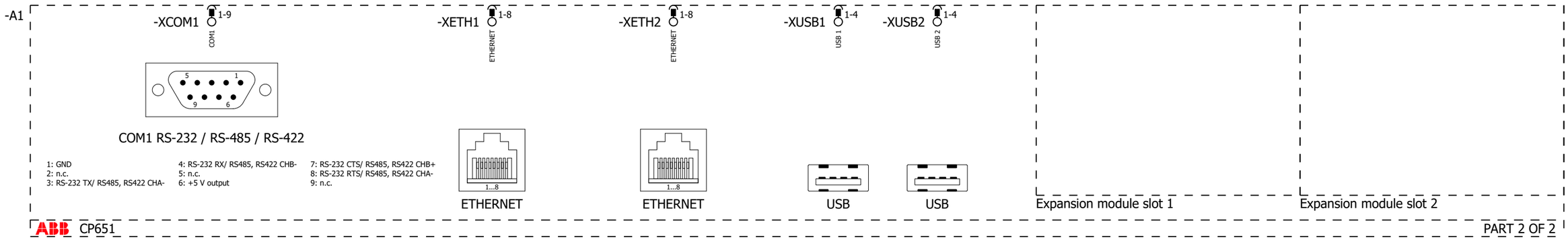

Ethernet Netzwerkadresse:

???.???.???.???

ABB\CP651.ema
CP651 Control Panel 10.4" TFT touch screen,
64 K colors, 800 x 600 pixel, PB610 runtime license
Version 03/2017
Einpolig
Variante A

2 4

			Date	16.03.2017	PLC		CP651	== ABB	Page 131
			Ed.	TGO				= CP6xx	from 182
			Appr					++	
Modification	Date	Name	Original		Replacement of	Replaced by		+ CP651	Page 3

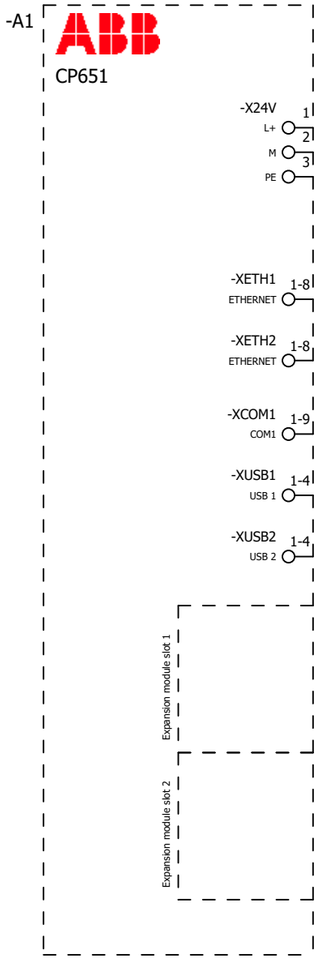

ABB\CP651.ema
CP651 Control Panel 10.4" TFT touch screen,
64 K colors, 800 x 600 pixel, PB610 runtime license
Version 03/2017
Übersicht
Variante A

			Date	16.03.2017	PLC		CP651	== ABB	Page	132
			Ed.	TGO				= CP6xx	from	182
			Appr					++		
Modification	Date	Name	Original		Replacement of	Replaced by		+ CP651	Page	4

-A1
ABB.1SAP551100R0001
CP651
1

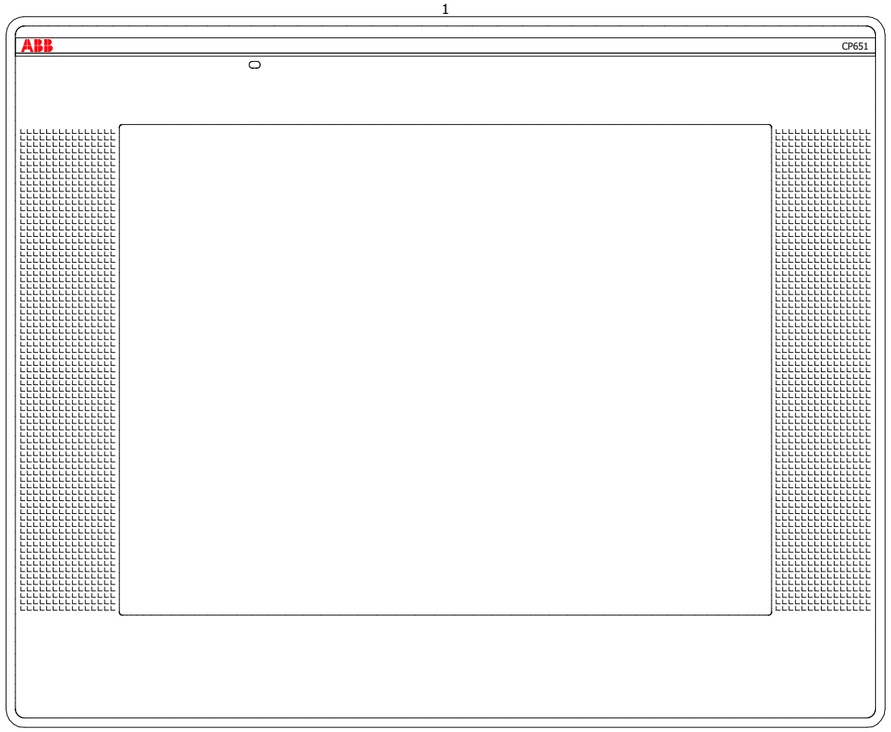

ABB\CP651.ema
CP651 Control Panel 10.4" TFT touch screen,
64 K colors, 800 x 600 pixel, PB610 runtime license
Version 03/2017
Schaltschrankaufbau
Variante A

Parts list

device tag	Quantity QU	Designation 1 Description Technical characteristics	Type number Order number	manufacturer supplier	part number function text
==ABB =CP6xx +CP651 -A1	1 PCE	CP651:CP600, control panel, TFT grafic display, touchscreen, 10.4", 800 x 600 pixel, PB610 CP651 Control Panel 10.4" TFT touch screen, 64 K colors, 800 x 600 pixel, PB610 runtime license	CP651 1SAP551100R0001	ABB	ABB.1SAP551100R0001

-A1

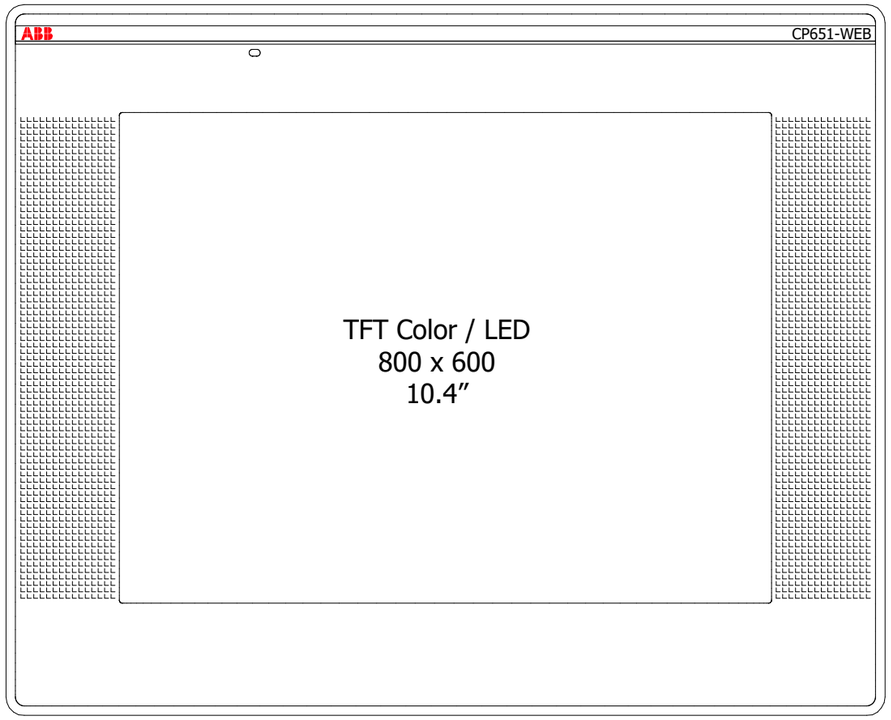

ABB\CP651-WEB.ema
CP651-WEB Control Panel 10.4" TFT touch screen,
64 K colors, 800 x 600 pixel, microbrowser
Version 03/2017
Allpolig
Variante A

0	1	2	3	4	5	6	7	8	9

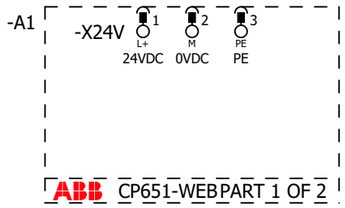

ABB\CP651-WEB.ema
CP651-WEB Control Panel 10.4" TFT touch screen,
64 K colors, 800 x 600 pixel, microbrowser
Version 03/2017
Allpolig
Variante B

0	1	2	3	4	5	6	7	8	9

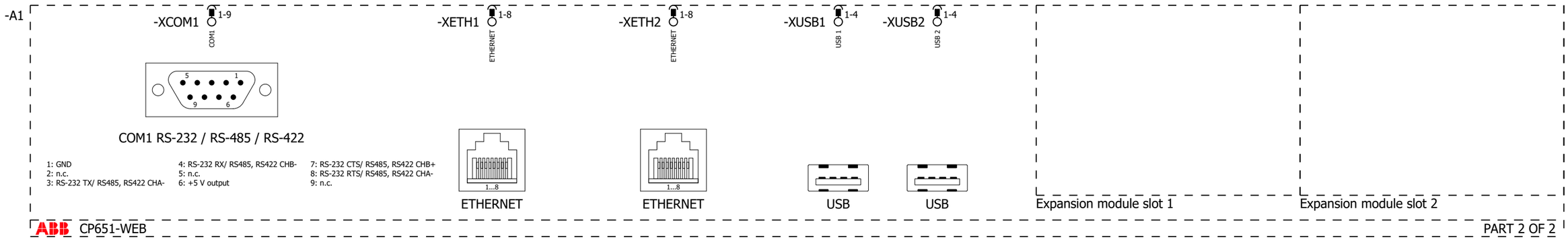

Ethernet Netzwerkadresse:

???.???.???.???

ABB\CP651-WEB.ema
CP651-WEB Control Panel 10.4" TFT touch screen,
64 K colors, 800 x 600 pixel, microbrowser
Version 03/2017
Einpolig
Variante A

2 4

			Date	16.03.2017	PLC		CP651-WEB	== ABB	Page 137
			Ed.	TGO				= CP6xx	from 182
			Appr					++	
Modification	Date	Name	Original		Replacement of	Replaced by		+ CP651-WEB	Page 3

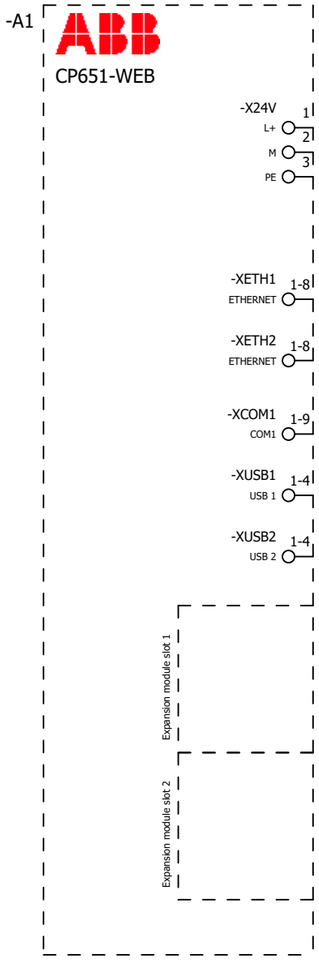

ABB\CP651-WEB.ema
CP651-WEB Control Panel 10.4" TFT touch screen,
64 K colors, 800 x 600 pixel, microbrowser
Version 03/2017
Übersicht
Variante A

-A1
ABB.1SAP551200R0001
CP651-WEB
1

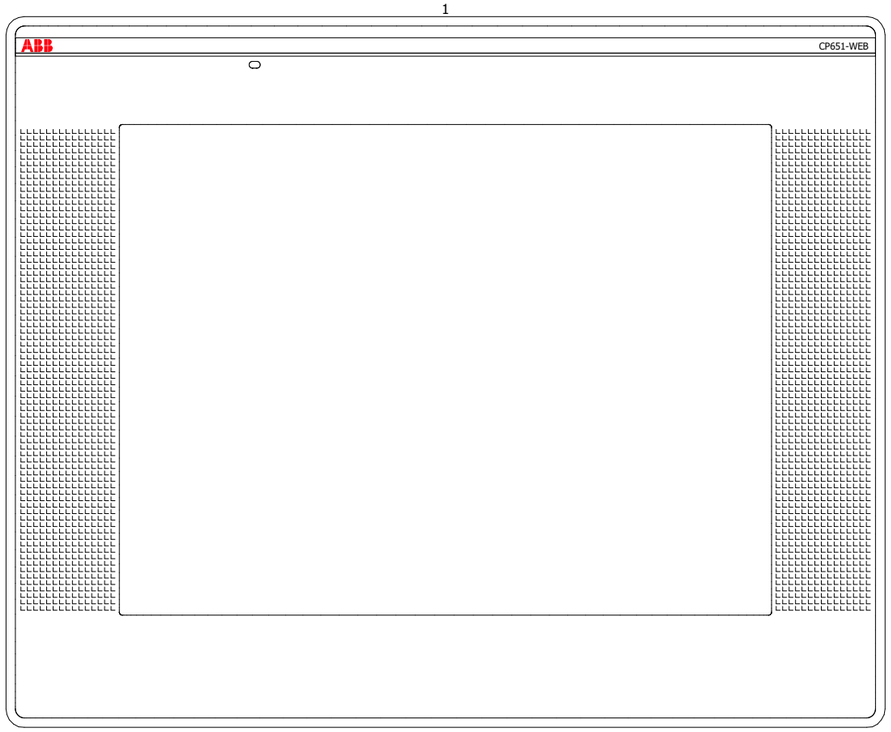

ABB\CP651-WEB.ema
CP651-WEB Control Panel 10.4" TFT touch screen,
64 K colors, 800 x 600 pixel, microbrowser
Version 03/2017
Schaltschrankaufbau
Variante A

Parts list

device tag	Quantity QU	Designation 1 Description Technical characteristics	Type number Order number	manufacturer supplier	part number function text
==ABB =CP6xx +CP651-WEB -A1	1 PCE	CP651-WEB:CP600, control panel, TFT grafic display, touchscreen, 10.4", 800 x 600 pixel, CP651-WEB Control Panel 10.4" TFT touch screen, 64 K colors, 800 x 600 pixel, microbrowser	CP651-WEB 1SAP551200R0001	ABB	ABB.1SAP551200R0001

-A1

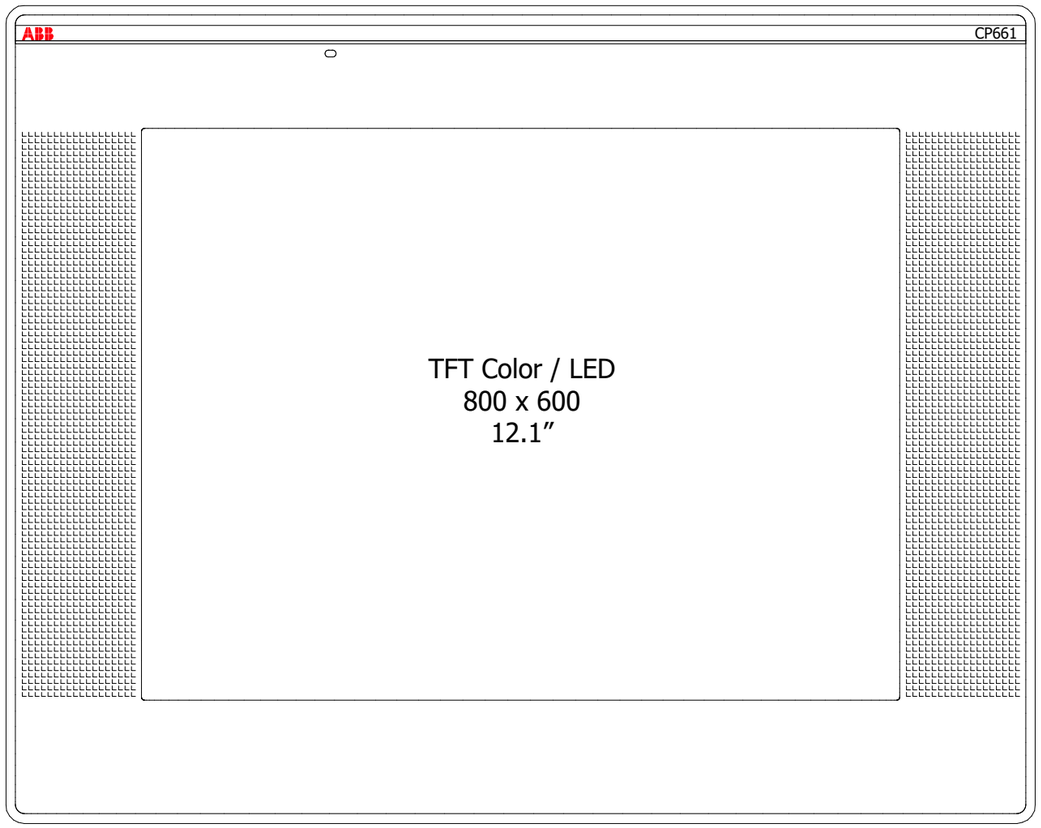

ABB\CP661.ema
CP661 Control Panel 12.1" TFT touch screen,
64 K colors, 800 x 600 pixel, PB610 runtime license
Version 03/2017
Allpolig
Variante A

			Date	16.03.2017	PLC		CP661	== ABB	Page	141
			Ed.	TGO				= CP6xx	from	182
			Appr					++		
Modification	Date	Name	Original		Replacement of	Replaced by		+ CP661	Page	1

0	1	2	3	4	5	6	7	8	9

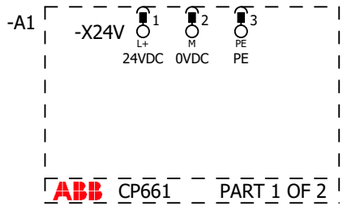

ABB\CP661.ema
CP661 Control Panel 12.1" TFT touch screen,
64 K colors, 800 x 600 pixel, PB610 runtime license
Version 03/2017
Allpolig
Variante B

0	1	2	3	4	5	6	7	8	9

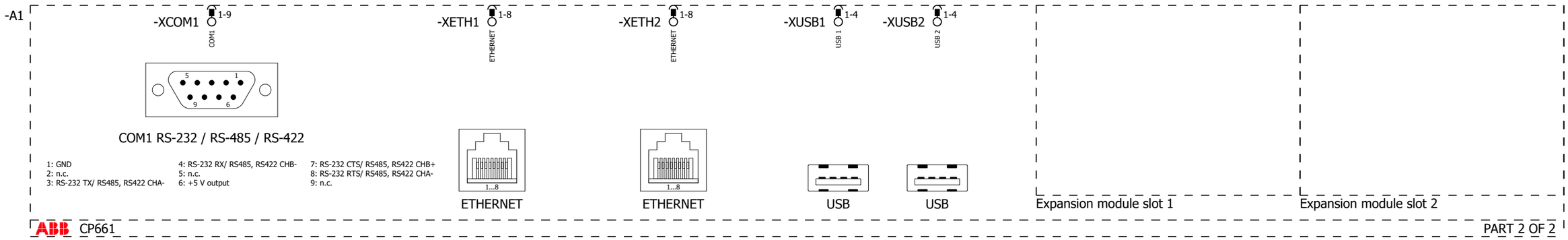

Ethernet Netzwerkadresse:

???.???.???.???

ABB\CP661.ema
CP661 Control Panel 12.1" TFT touch screen,
64 K colors, 800 x 600 pixel, PB610 runtime license
Version 03/2017
Einpolig
Variante A

2 4

			Date	16.03.2017	PLC		CP661	== ABB	Page 143
			Ed.	TGO				= CP6xx	from 182
			Appr					++	
Modification	Date	Name	Original		Replacement of	Replaced by		+ CP661	Page 3

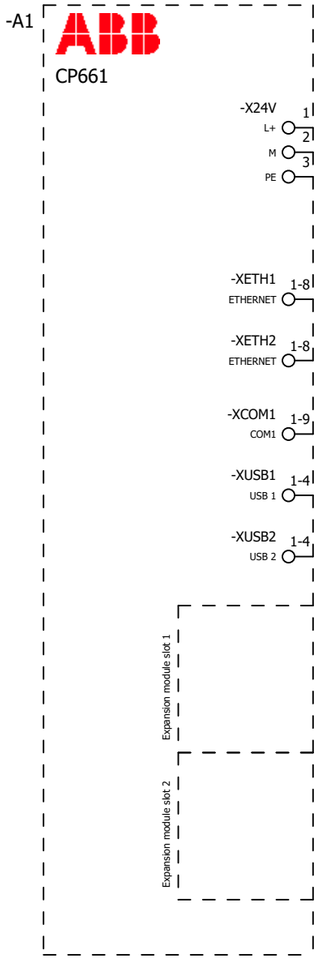

ABB\CP661.ema
CP661 Control Panel 12.1" TFT touch screen,
64 K colors, 800 x 600 pixel, PB610 runtime license
Version 03/2017
Übersicht
Variante A

			Date	16.03.2017	PLC		CP661	== ABB	Page	144
			Ed.	TGO				= CP6xx	from	182
			Appr					++		
Modification	Date	Name	Original		Replacement of	Replaced by		+ CP661	Page	4

-A1
ABB.1SAP561100R0001
CP661
1

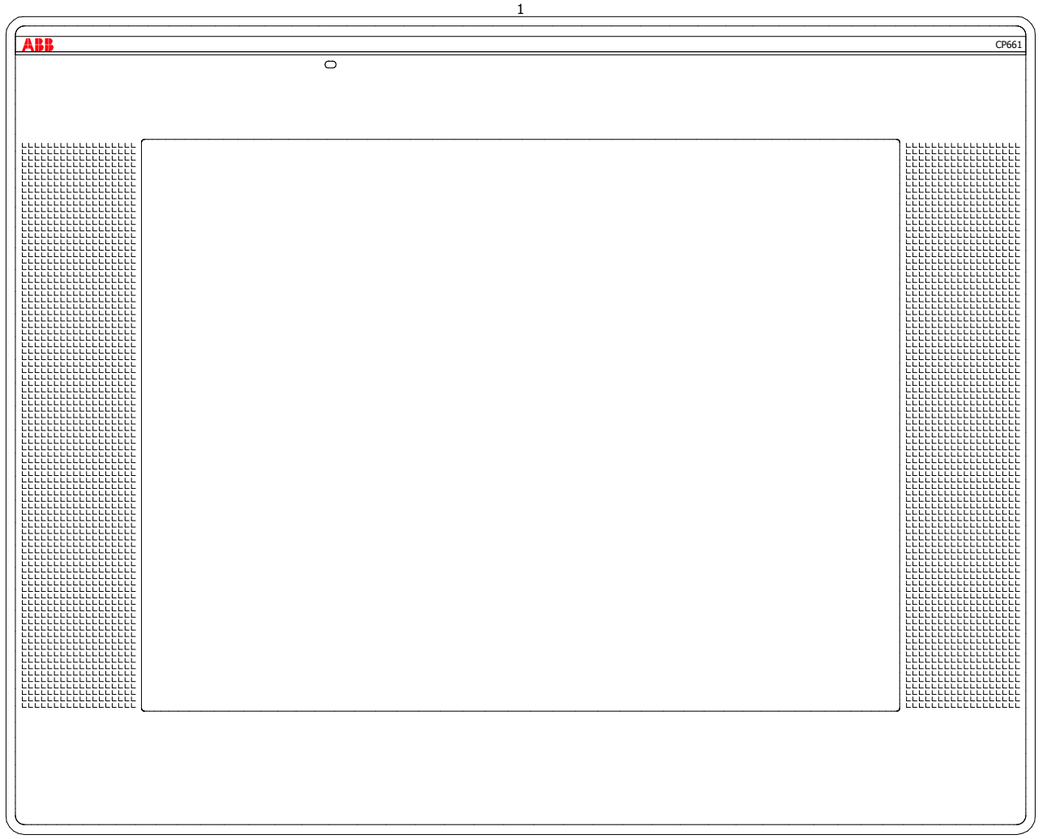

ABB\CP661.ema
CP661 Control Panel 12.1" TFT touch screen,
64 K colors, 800 x 600 pixel, PB610 runtime license
Version 03/2017
Schaltschrankaufbau
Variante A

Parts list

device tag	Quantity QU	Designation 1 Description Technical characteristics	Type number Order number	manufacturer supplier	part number function text
==ABB =CP6xx +CP661 -A1	1 PCE	CP661:CP600, control panel, TFT grafic display, touchscreen, 12.1", 800 x 600 pixel, PB610 CP661 Control Panel 12.1" TFT touch screen, 64 K colors, 800 x 600 pixel, PB610 runtime license	CP661 1SAP561100R0001	ABB	ABB.1SAP561100R0001

-A1

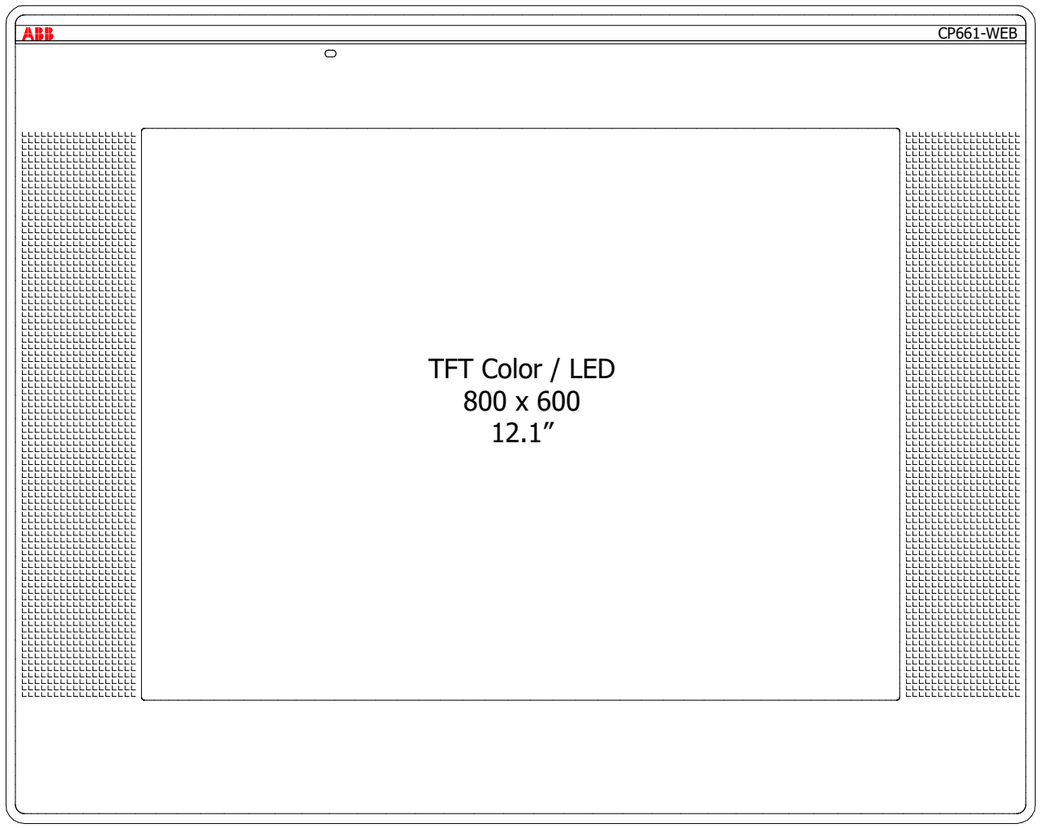

ABB\CP661-WEB.ema
CP661-WEB Control Panel 12.1" TFT touch screen,
64 K colors, 800 x 600 pixel, microbrowser
Version 03/2017
Allpolig
Variante A

0	1	2	3	4	5	6	7	8	9

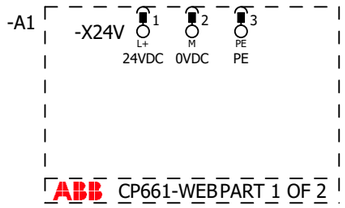

ABB\CP661-WEB.ema
CP661-WEB Control Panel 12.1" TFT touch screen,
64 K colors, 800 x 600 pixel, microbrowser
Version 03/2017
Allpolig
Variante B

0	1	2	3	4	5	6	7	8	9

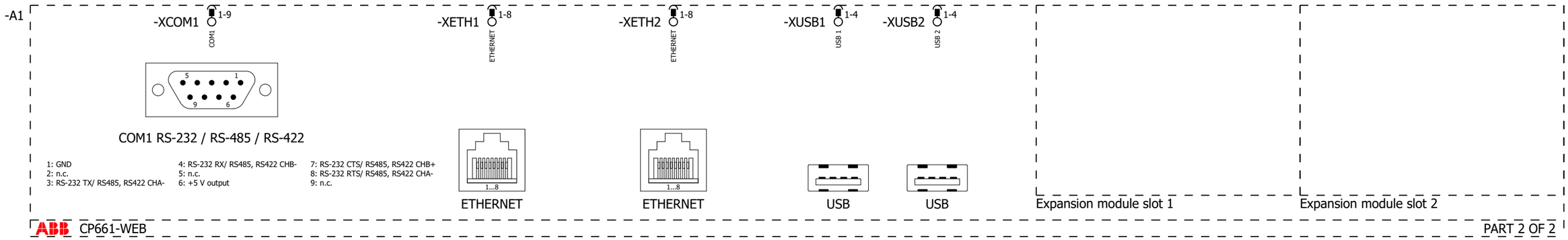

Ethernet Netzwerkadresse:

???.???.???.???

ABB\CP661-WEB.ema
CP661-WEB Control Panel 12.1" TFT touch screen,
64 K colors, 800 x 600 pixel, microbrowser
Version 03/2017
Einpolig
Variante A

2 4

			Date	16.03.2017	PLC		CP661-WEB	== ABB	Page	149
			Ed.	TGO				= CP6xx	from	182
			Appr					++		
Modification	Date	Name	Original		Replacement of	Replaced by		+ CP661-WEB	Page	3

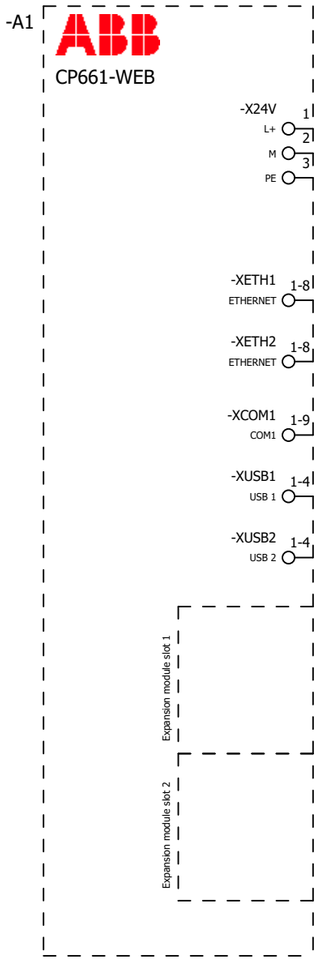

ABB\CP661-WEB.ema
CP661-WEB Control Panel 12.1" TFT touch screen,
64 K colors, 800 x 600 pixel, microbrowser
Version 03/2017
Übersicht
Variante A

-A1
ABB.1SAP561200R0001
CP661-WEB
1

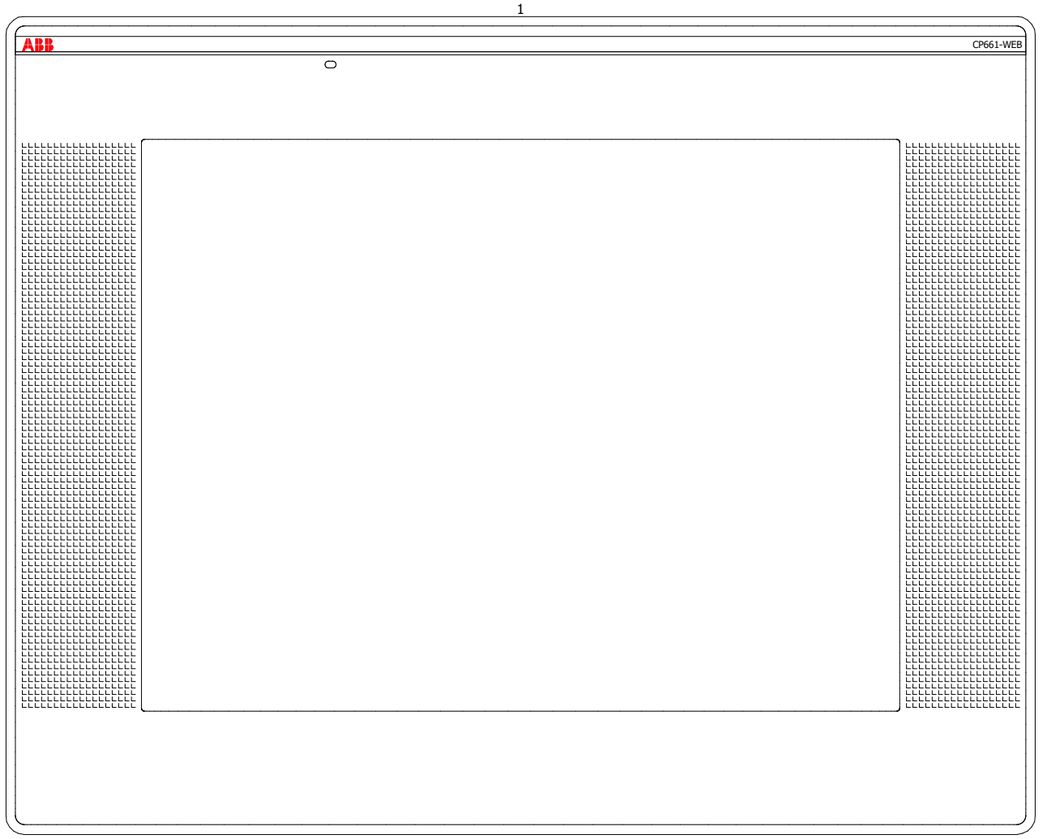

ABB\CP661-WEB.ema
CP661-WEB Control Panel 12.1" TFT touch screen,
64 K colors, 800 x 600 pixel, microbrowser
Version 03/2017
Schaltschrankaufbau
Variante A

Parts list

device tag	Quantity QU	Designation 1 Description Technical characteristics	Type number Order number	manufacturer supplier	part number function text
==ABB =CP6xx +CP661-WEB -A1	1 PCE	CP661-WEB:CP600, control panel, TFT grafic display, touchscreen, 12.1", 800 x 600 pixel, CP661-WEB Control Panel 12.1" TFT touch screen, 64 K colors, 800 x 600 pixel, microbrowser	CP661-WEB 1SAP561200R0001	ABB	ABB.1SAP561200R0001

-A1

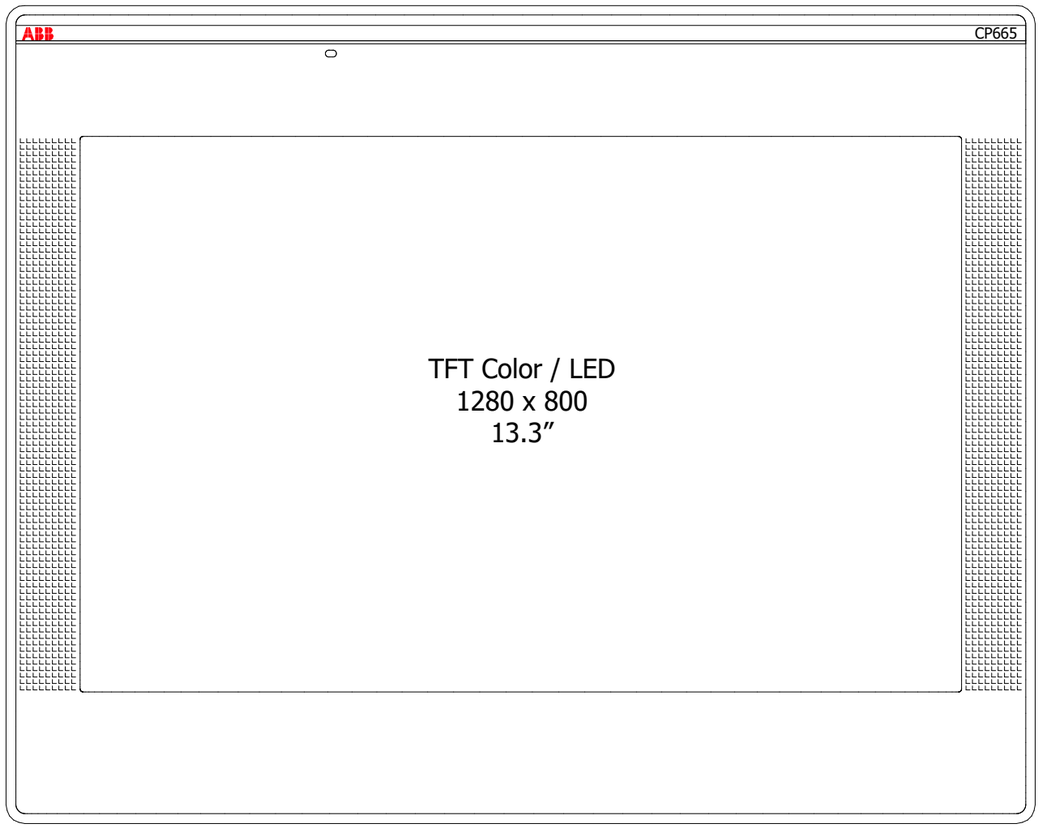

ABB\CP665.ema
CP665 Control Panel 13.3" TFT touch screen,
64 K colors, 1280 x 800 pixel, PB610 runtime license
Version 03/2017
Allpolig
Variante A

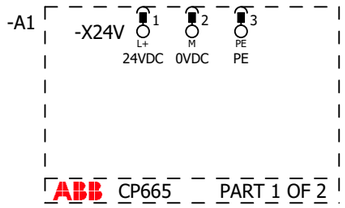

ABB\CP665.ema
CP665 Control Panel 13.3" TFT touch screen,
64 K colors, 1280 x 800 pixel, PB610 runtime license
Version 03/2017
Allpolig
Variante B

0	1	2	3	4	5	6	7	8	9

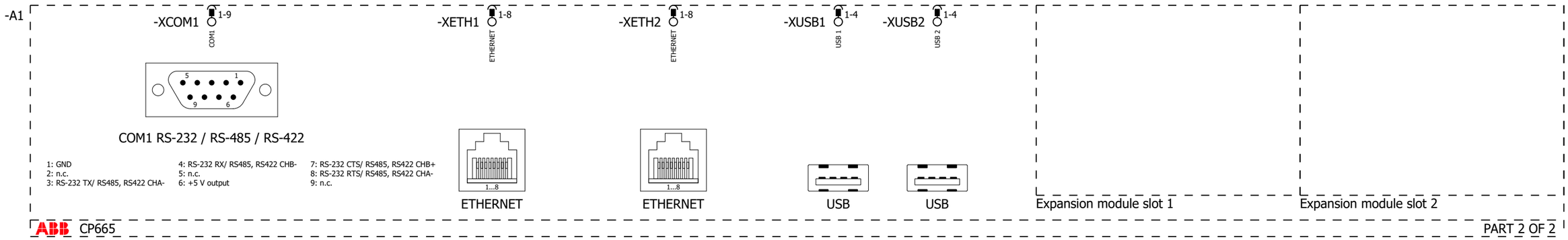

Ethernet Netzwerkadresse:

???.???.???.???

ABB\CP665.ema
CP665 Control Panel 13.3" TFT touch screen,
64 K colors, 1280 x 800 pixel, PB610 runtime license
Version 03/2017
Einpolig
Variante A

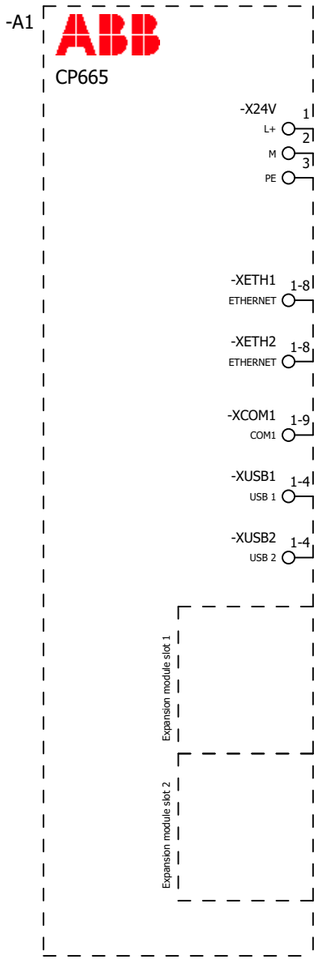

ABB\CP665.ema
CP665 Control Panel 13.3" TFT touch screen,
64 K colors, 1280 x 800 pixel, PB610 runtime license
Version 03/2017
Übersicht
Variante A

			Date	16.03.2017	PLC		CP665	== ABB	Page	156
			Ed.	TGO				= CP6xx	from	182
			Appr					++		
Modification	Date	Name	Original		Replacement of	Replaced by		+ CP665	Page	4

-A1
ABB.1SAP565100R0001
CP665
1

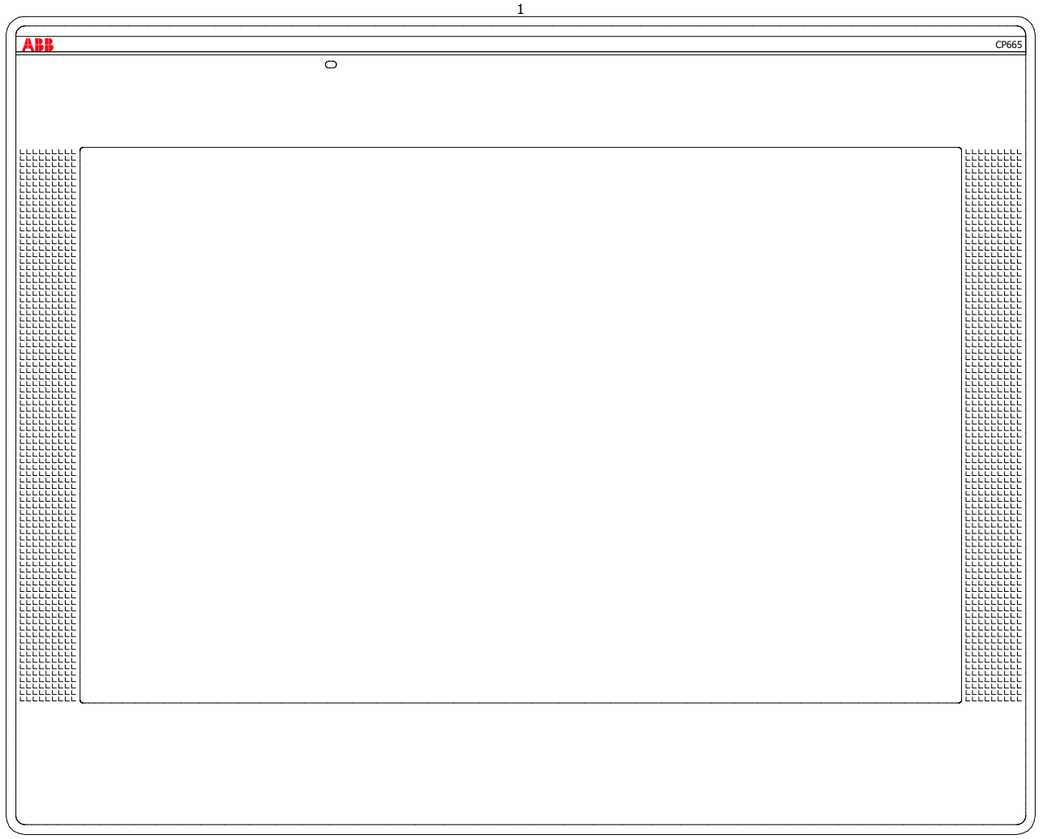

ABB\CP665.ema
CP665 Control Panel 13.3" TFT touch screen,
64 K colors, 1280 x 800 pixel, PB610 runtime license
Version 03/2017
Schaltschrankaufbau
Variante A

Parts list

device tag	Quantity QU	Designation 1 Description Technical characteristics	Type number Order number	manufacturer supplier	part number function text
==ABB =CP6xx +CP665 -A1	1 PCE	CP665:CP600, control panel, TFT grafic display, touchscreen, 13.3", 1280 x 800 pixel, CP665 Control Panel 13.3" TFT touch screen, 64 K colors, 1280 x 800 pixel, PB610 runtime license	CP665 1SAP565100R0001	ABB	ABB.1SAP565100R0001

-A1

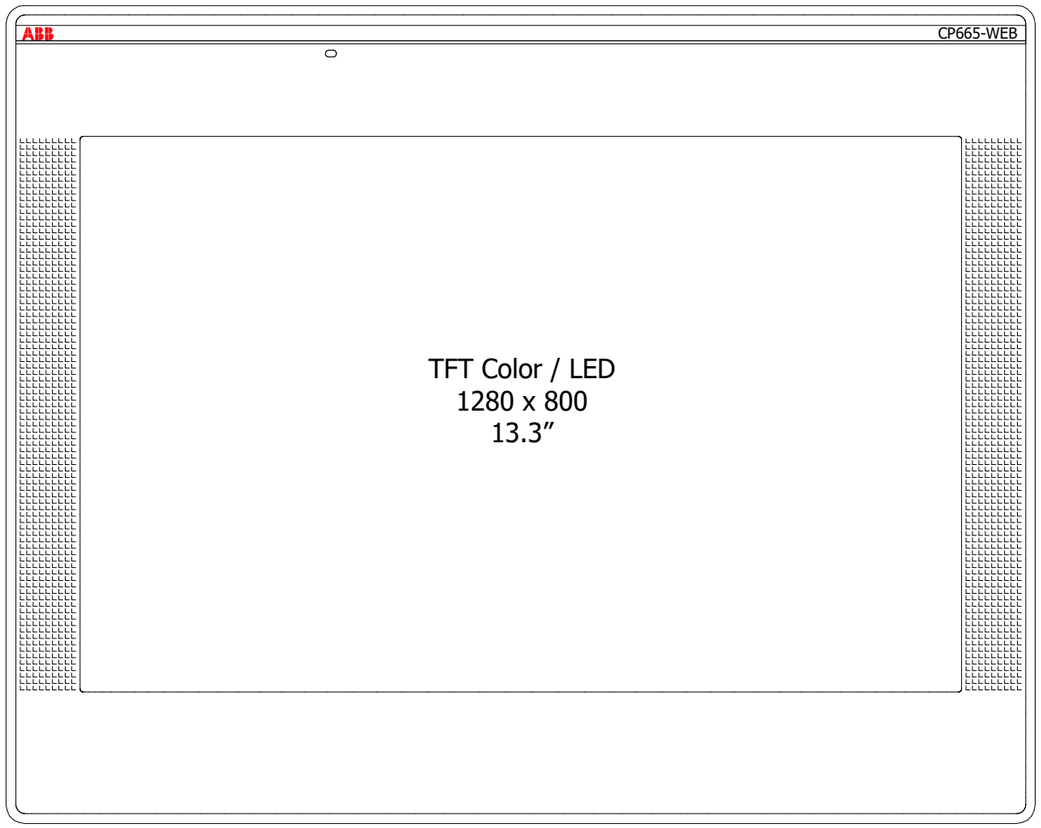

ABB\CP665-WEB.ema
CP665-WEB Control Panel 13.3" TFT touch screen,
64 K colors, 1280 x 800 pixel, microbrowser
Version 03/2017
Allpolig
Variante A

0	1	2	3	4	5	6	7	8	9

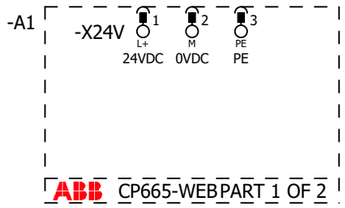

ABB\CP665-WEB.ema
CP665-WEB Control Panel 13.3" TFT touch screen,
64 K colors, 1280 x 800 pixel, microbrowser
Version 03/2017
Allpolig
Variante B

0	1	2	3	4	5	6	7	8	9

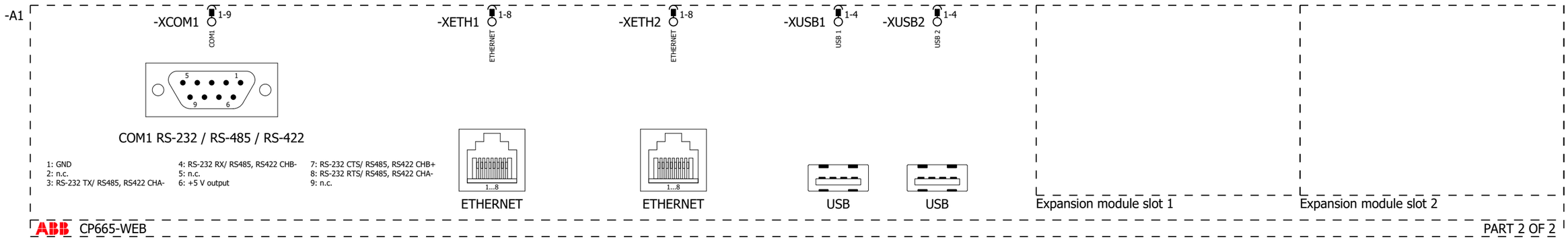

Ethernet Netzwerkadresse:

???.???.???.???

ABB\CP665-WEB.ema
CP665-WEB Control Panel 13.3" TFT touch screen,
64 K colors, 1280 x 800 pixel, microbrowser
Version 03/2017
Einpolig
Variante A

2 4

			Date	16.03.2017	PLC		CP665-WEB	== ABB	Page 161
			Ed.	TGO				= CP6xx	from 182
			Appr					++	
Modification	Date	Name	Original		Replacement of	Replaced by		+ CP665-WEB	Page 3

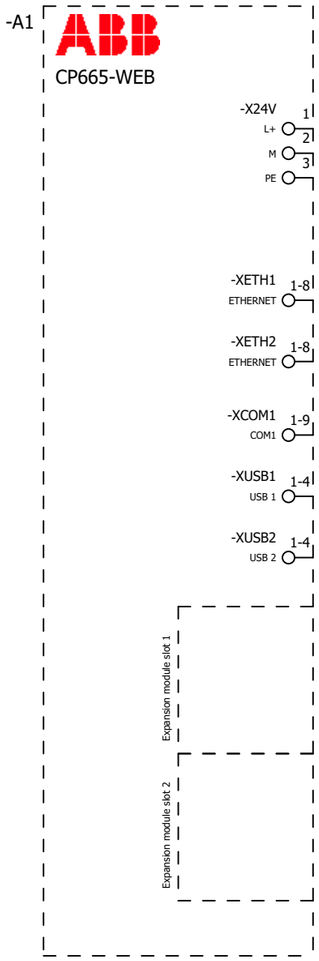

ABB\CP665-WEB.ema
CP665-WEB Control Panel 13.3" TFT touch screen,
64 K colors, 1280 x 800 pixel, microbrowser
Version 03/2017
Übersicht
Variante A

-A1
ABB.1SAP565200R0001
CP665-WEB
1

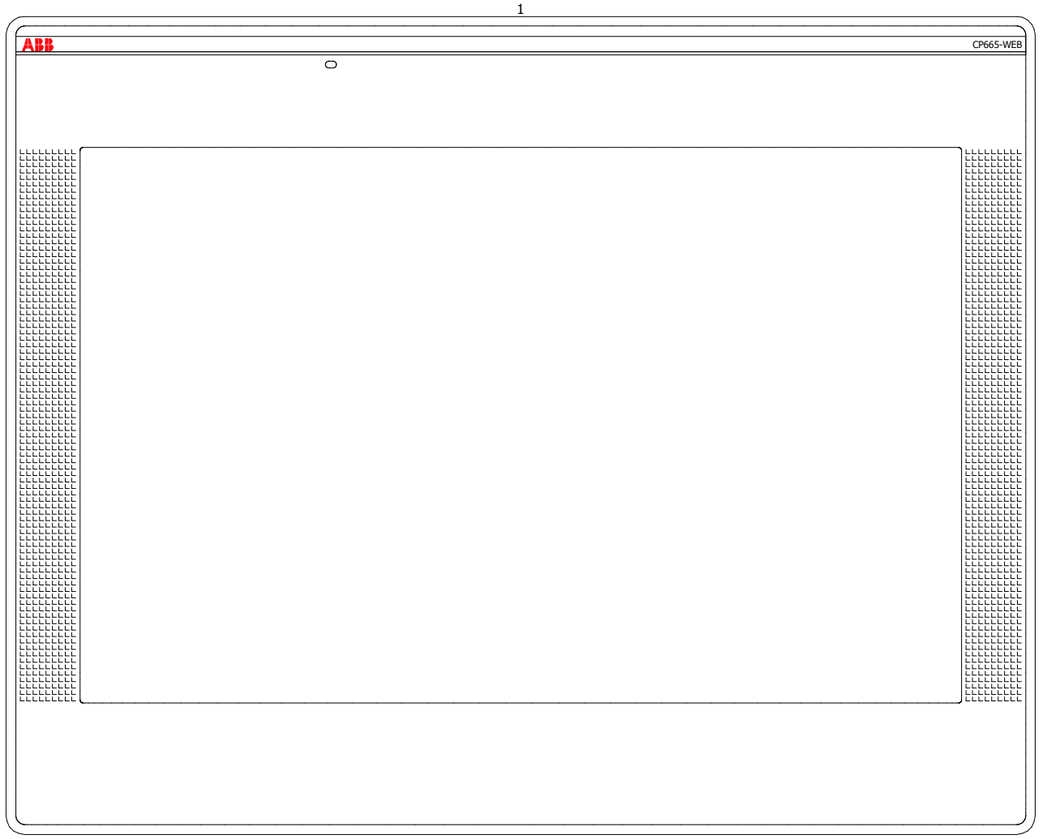

ABB\CP665-WEB.ema
CP665-WEB Control Panel 13.3" TFT touch screen,
64 K colors, 1280 x 800 pixel, microbrowser
Version 03/2017
Schaltschrankaufbau
Variante A

Parts list

device tag	Quantity QU	Designation 1 Description Technical characteristics	Type number Order number	manufacturer supplier	part number function text
==ABB =CP6xx +CP665-WEB -A1	1 PCE	CP665-WEB:CP600, control panel, TFT grafic display, touchscreen, 13.3", 1280 x 800 pixel, CP665-WEB Control Panel 13.3" TFT touch screen, 64 K colors, 1280 x 800 pixel, microbrowser	CP665-WEB 1SAP565200R0001	ABB	ABB.1SAP565200R0001

-A1

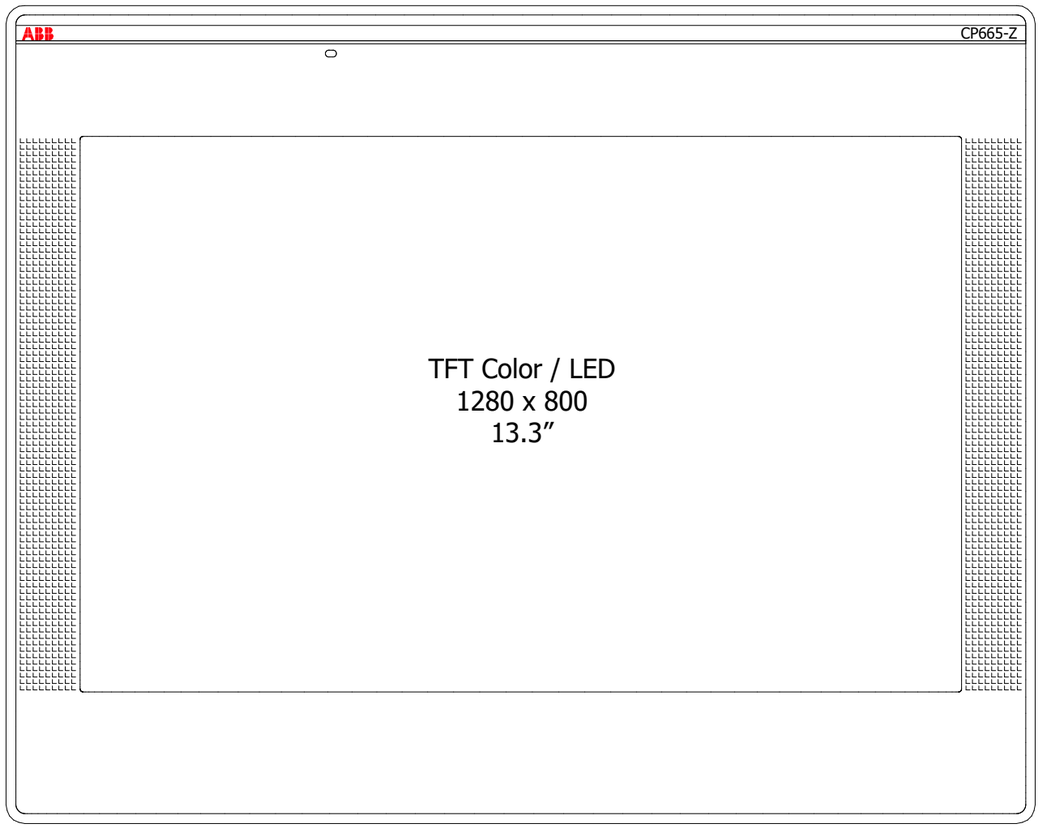

ABB\CP665-Z.ema
CP665-Z:
CP600, control panel, TFT graphic display, touchscreen, 13.3",
1280 x 800 pixel, for ABB zenon
Version 03/2017
Allpolig
Variante A

0	1	2	3	4	5	6	7	8	9

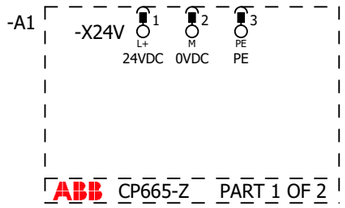

ABB\CP665-Z.ema
CP665-Z:
CP600, control panel, TFT graphic display, touchscreen, 13.3",
1280 x 800 pixel, for ABB zenon
Version 03/2017
Allpolig
Variante B

0	1	2	3	4	5	6	7	8	9

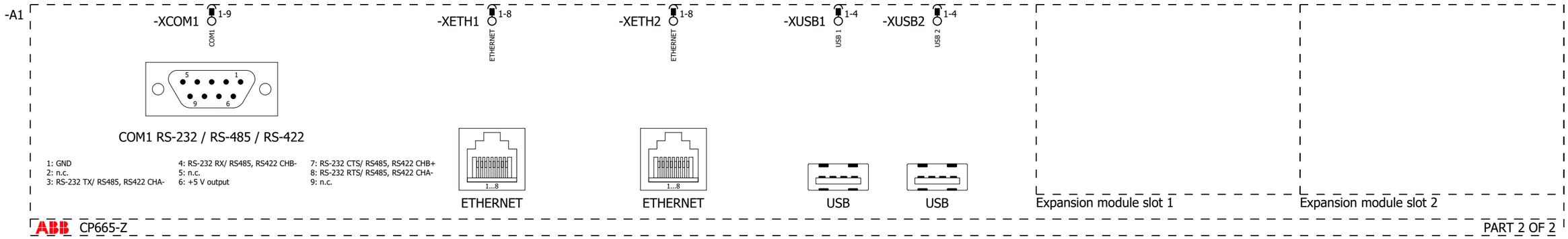

Ethernet Netzwerkadresse:

???.???.???.???

ABB\CP665-Z.ema
CP665-Z:
CP600, control panel, TFT graphic display, touchscreen, 13.3",
1280 x 800 pixel, for ABB zenon
Version 03/2017
Einpolig
Variante A

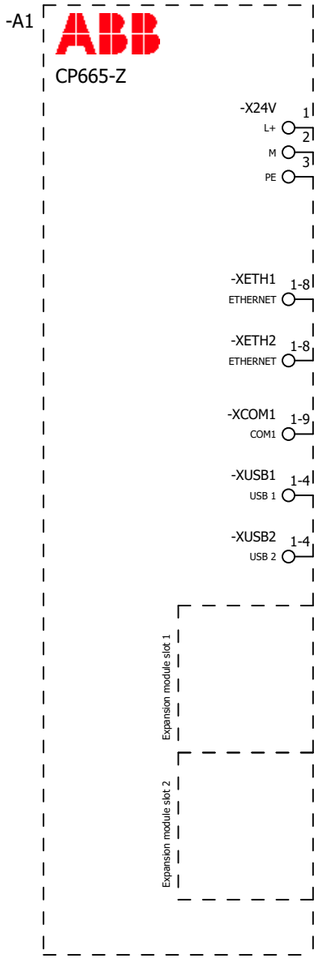

ABB\CP665-Z.ema
CP665-Z:
CP600, control panel, TFT graphic display, touchscreen, 13.3",
1280 x 800 pixel, for ABB zenon
Version 03/2017
Übersicht
Variante A

-A1
ABB.1SAP565300R0001
CP665-Z
1

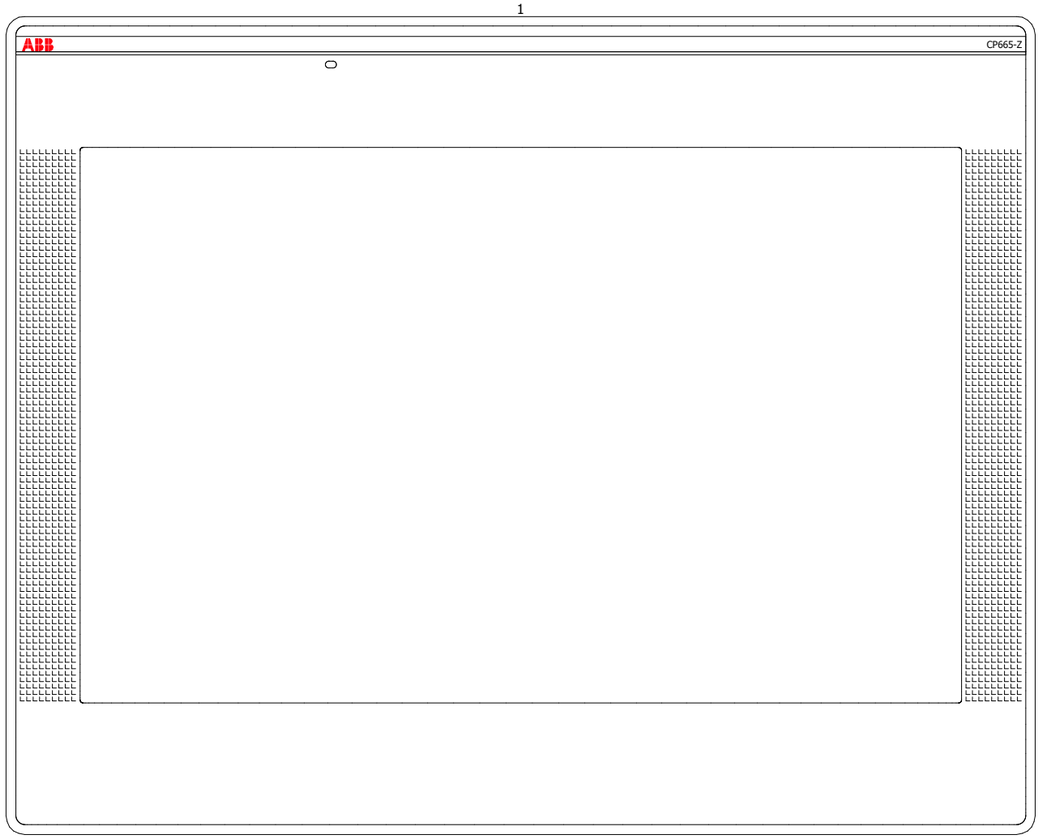

ABB\CP665-Z.ema
CP665-Z:
CP600, control panel, TFT graphic display, touchscreen, 13.3",
1280 x 800 pixel, for ABB zenon
Version 03/2017
Schaltschrankaufbau
Variante A

Parts list

device tag	Quantity QU	Designation 1 Description Technical characteristics	Type number Order number	manufacturer supplier	part number function text
==ABB =CP6xx +CP665-Z -A1	1 PCE	CP665-Z:CP600, control panel, TFT graphic display, touchscreen, 13.3", 1280 x 800 pixel, CP665-Z:CP600, control panel, TFT graphic display, touchscreen, 13.3", 1280 x 800 pixel, for ABB zenon	CP665-Z 1SAP565300R0001	ABB	ABB.1SAP565300R0001

-A1

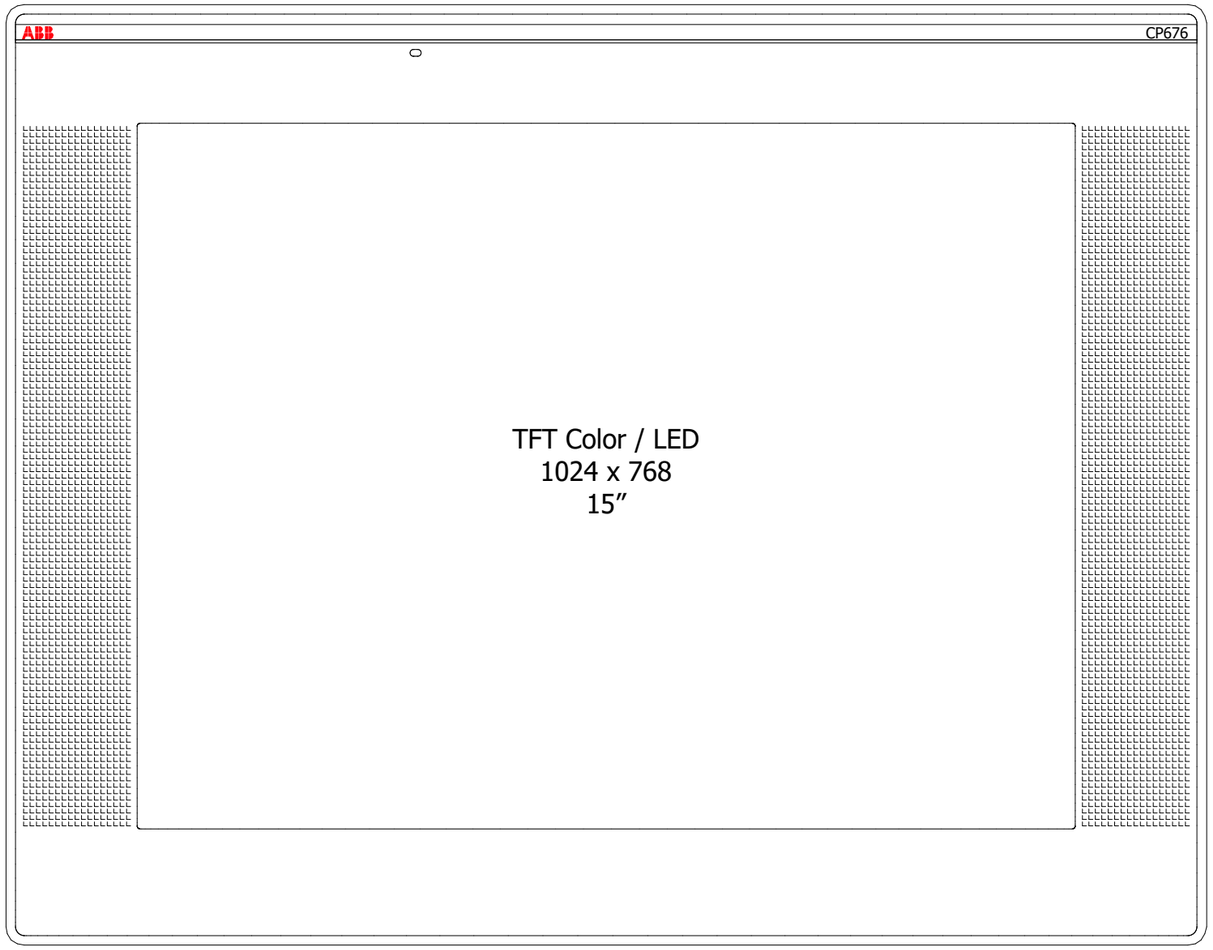

ABB\CP676.ema
CP676 Control Panel 15" TFT touch screen,
64 K colors, 1024 x 768 pixel, PB610 runtime license
Version 03/2017
Allpolig
Variante A

0	1	2	3	4	5	6	7	8	9

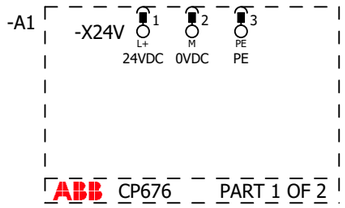

ABB\CP676.ema
CP676 Control Panel 15" TFT touch screen,
64 K colors, 1024 x 768 pixel, PB610 runtime license
Version 03/2017
Allpolig
Variante B

0	1	2	3	4	5	6	7	8	9

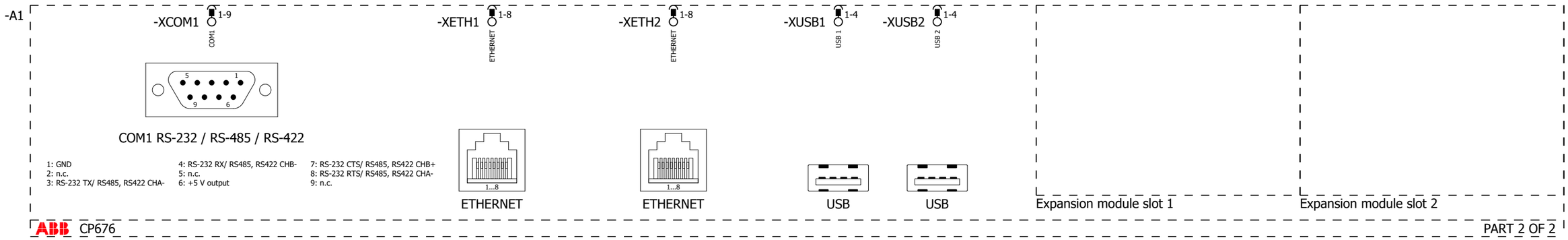

Ethernet Netzwerkadresse:

???.???.???.???

ABB\CP676.ema
CP676 Control Panel 15" TFT touch screen,
64 K colors, 1024 x 768 pixel, PB610 runtime license
Version 03/2017
Einpolig
Variante A

2 4

			Date	16.03.2017	PLC		CP676	== ABB	Page	173
			Ed.	TGO				= CP6xx	from	182
			Appr					++		
Modification	Date	Name	Original		Replacement of	Replaced by		+ CP676	Page	3

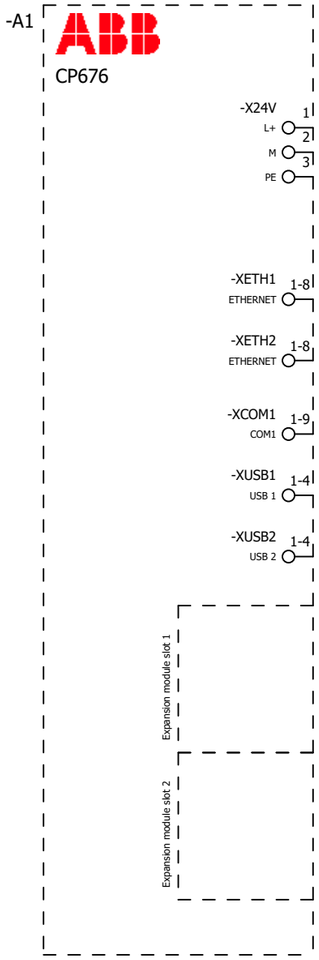

ABB\CP676.ema
CP676 Control Panel 15" TFT touch screen,
64 K colors, 1024 x 768 pixel, PB610 runtime license
Version 03/2017
Übersicht
Variante A

			Date	16.03.2017	PLC		CP676	== ABB	Page	174
			Ed.	TGO				= CP6xx	from	182
			Appr					++		
Modification	Date	Name	Original		Replacement of	Replaced by		+ CP676	Page	4

-A1
ABB.1SAP576100R0001
CP676
1

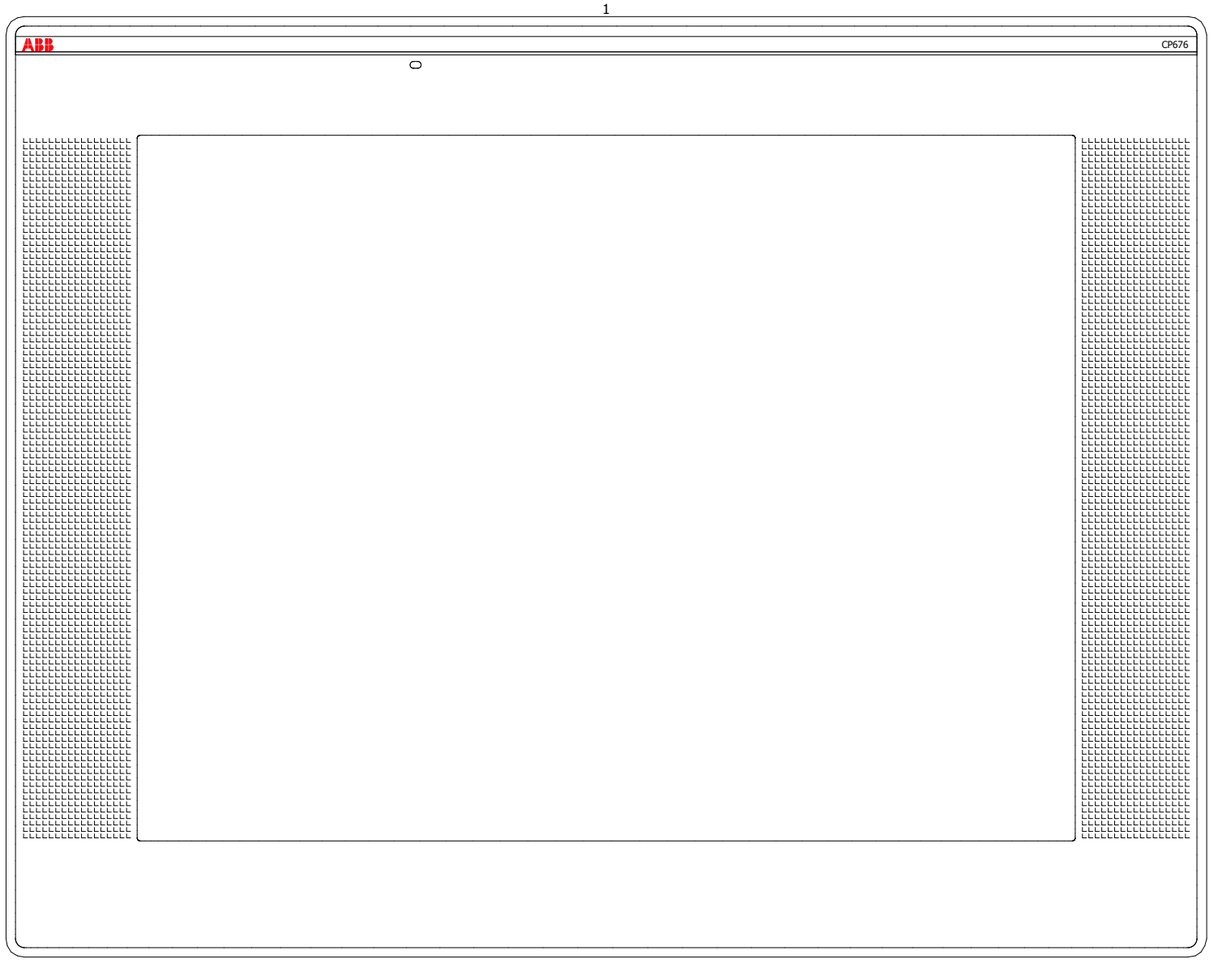

ABB\CP676.ema
CP676 Control Panel 15" TFT touch screen,
64 K colors, 1024 x 768 pixel, PB610 runtime license
Version 03/2017
Schaltschrankaufbau
Variante A

Parts list

device tag	Quantity QU	Designation 1 Description Technical characteristics	Type number Order number	manufacturer supplier	part number function text
==ABB =CP6xx +CP676 -A1	1 PCE	CP676:CP600, control panel, TFT grafic display, touchscreen, 15", 1024 x 768 pixel, PB610 CP676 Control Panel 15" TFT touch screen, 64 K colors, 1024 x 768 pixel, PB610 runtime license	CP676 1SAP576100R0001	ABB	ABB.1SAP576100R0001

-A1

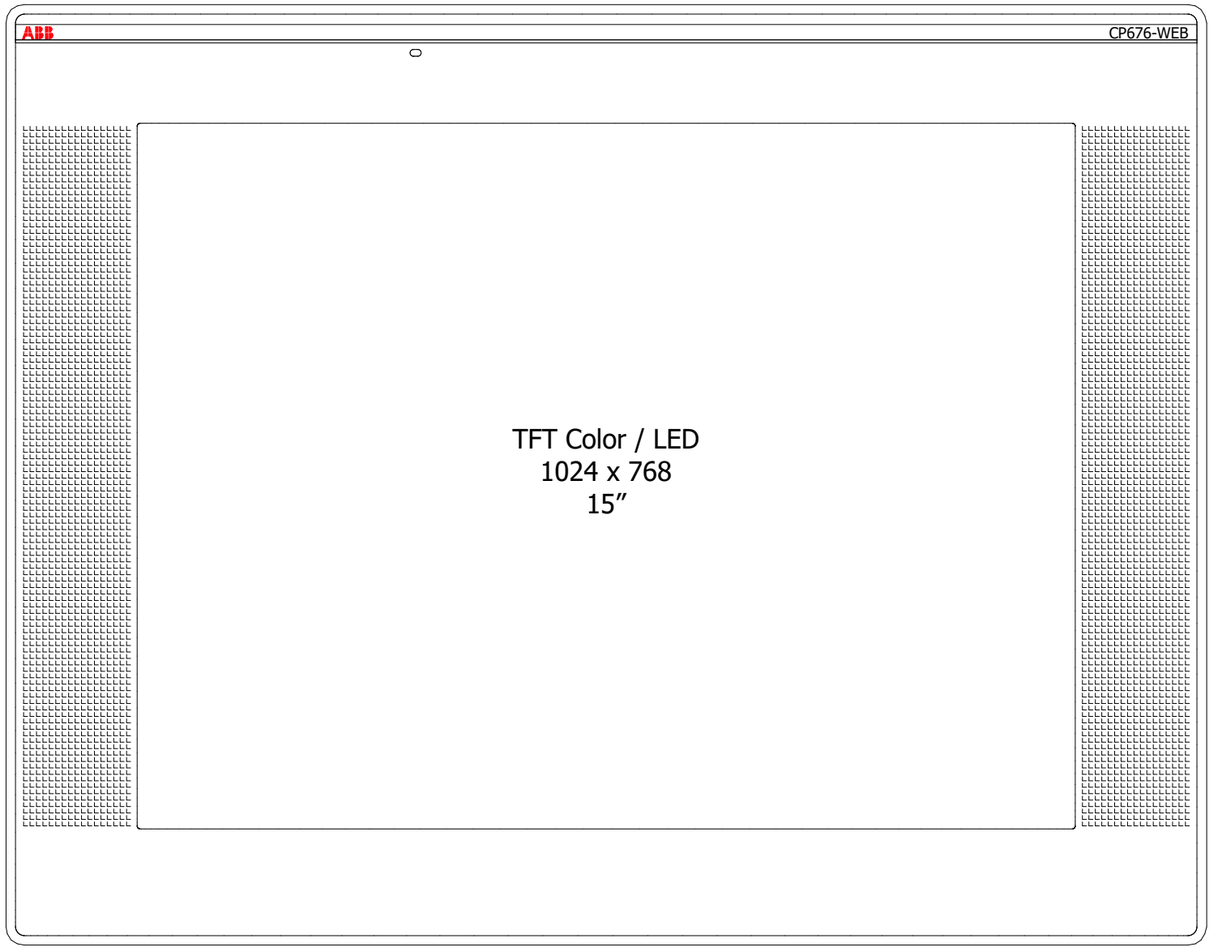

ABB\CP676-WEB.ema
CP676-WEB Control Panel 15" TFT touch screen,
64 K colors, 1024 x 768 pixel, microbrowser
Version 03/2017
Allpolig
Variante A

0	1	2	3	4	5	6	7	8	9

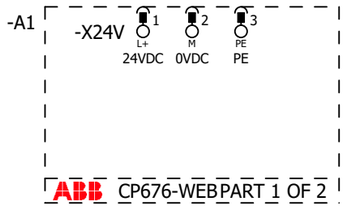

ABB\CP676-WEB.ema
CP676-WEB Control Panel 15" TFT touch screen,
64 K colors, 1024 x 768 pixel, microbrowser
Version 03/2017
Allpolig
Variante B

0	1	2	3	4	5	6	7	8	9

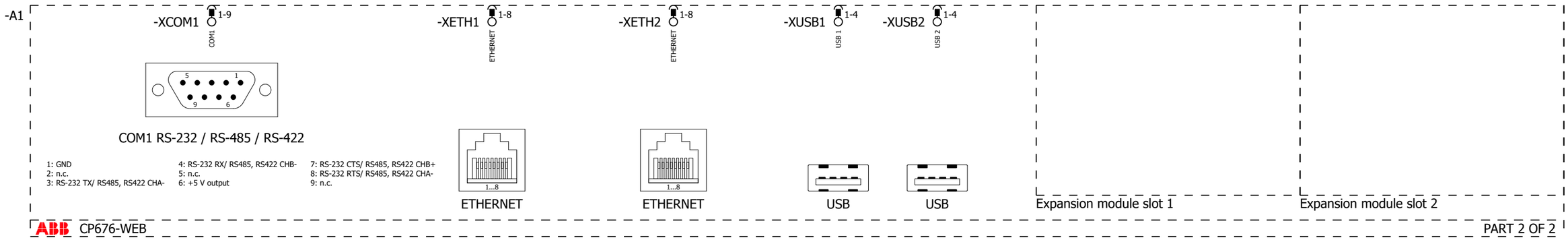

Ethernet Netzwerkadresse:

???.???.???.???

ABB\CP676-WEB.ema
CP676-WEB Control Panel 15" TFT touch screen,
64 K colors, 1024 x 768 pixel, microbrowser
Version 03/2017
Einpolig
Variante A

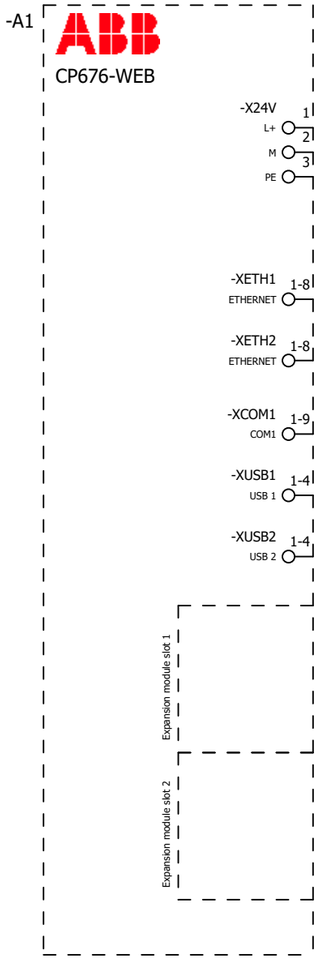

ABB\CP676-WEB.ema
CP676-WEB Control Panel 15" TFT touch screen,
64 K colors, 1024 x 768 pixel, microbrowser
Version 03/2017
Übersicht
Variante A

-A1
ABB.1SAP576200R0001
CP676-WEB
1

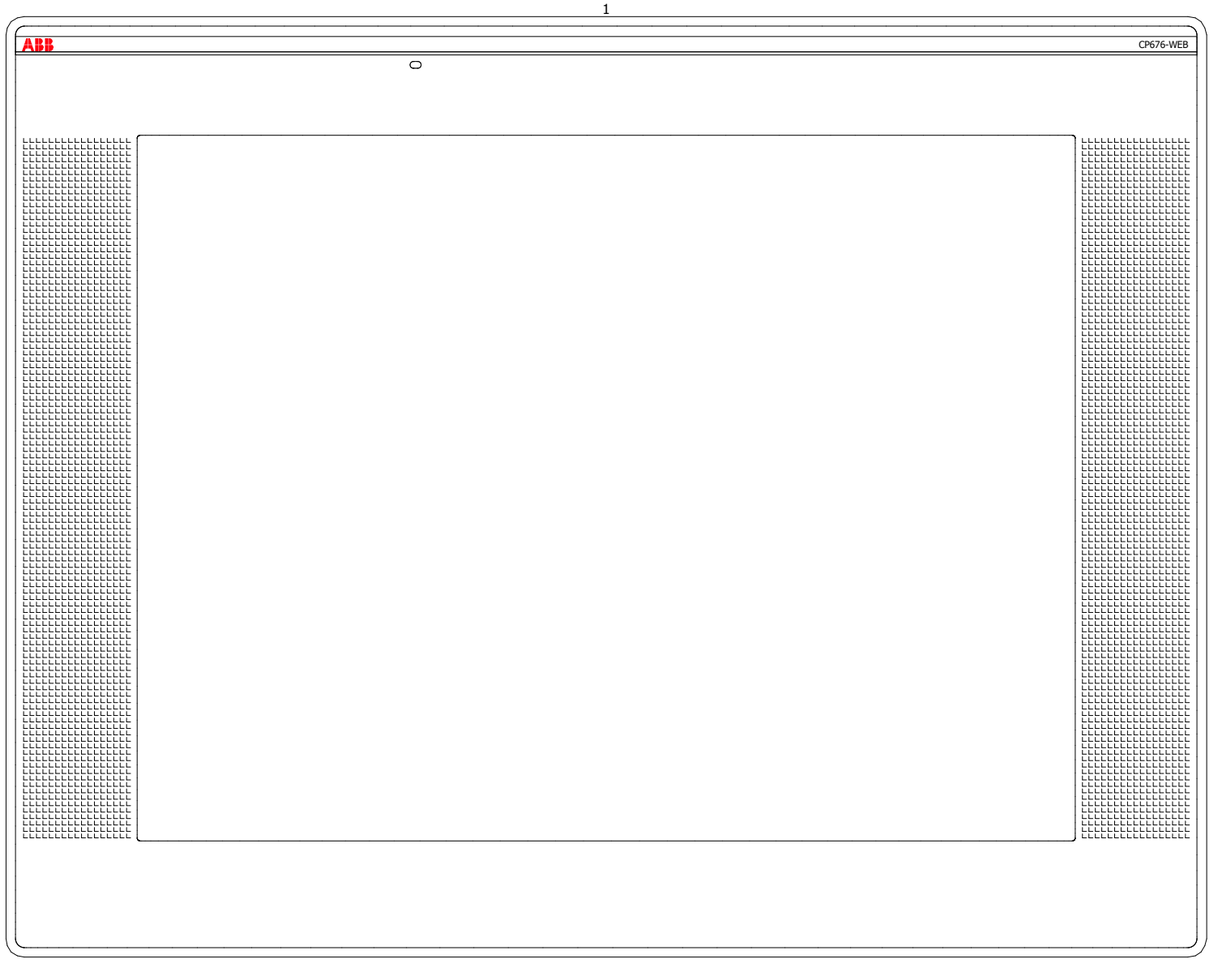

ABB\CP676-WEB.ema
CP676-WEB Control Panel 15" TFT touch screen,
64 K colors, 1024 x 768 pixel, microbrowser
Version 03/2017
Schaltschrankaufbau
Variante A

Parts list

device tag	Quantity QU	Designation 1 Description Technical characteristics	Type number Order number	manufacturer supplier	part number function text
==ABB =CP6xx +CP676-WEB -A1	1 PCE	CP676-WEB:CP600, control panel, TFT grafic display, touchscreen, 15", 1024 x 768 pixel, CP676-WEB Control Panel 15" TFT touch screen, 64 K colors, 1024 x 768 pixel, microbrowser	CP676-WEB 1SAP576200R0001	ABB	ABB.1SAP576200R0001