ABB INDUSTRIAL DRIVES

ACS800-04/-04M (45 to 560 kW) ACS800-U4 (60 to 600 hp) drive modules

Hardware manual

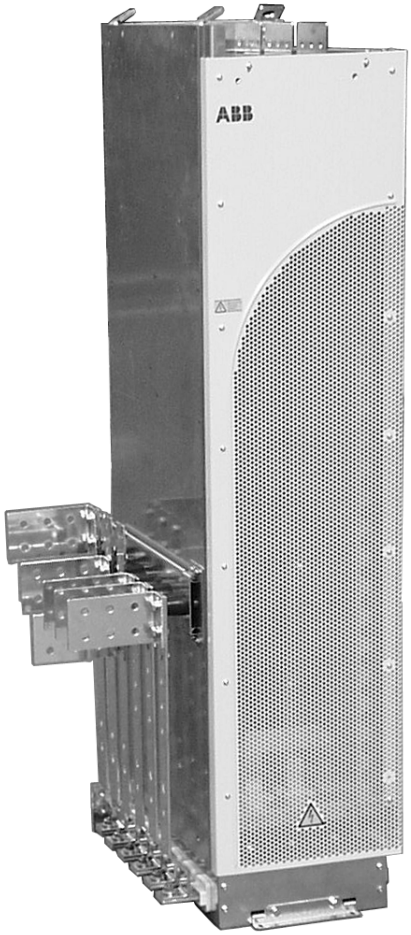

List of related manuals

Drive hardware manuals and guides	Code (English)
ACS800-04/04M/U4 Drive Modules (45 to 560 kW, 60 to 600 hp) Hardware Manual	3AFE64671006
ACS800-04/04M/U4 Drive Modules (45 to 560 kW, 60 to 600 hp) Cabinet Installation	3AFE68360323
ACS800-04/04M/U4 Drive Modules (45 to 560 kW, 60 to 600 hp) Rittal TS 8 Cabinet Installation	3AFE68372330
ACS800-04M+E202 Drive Modules (45 to 560 kW, 60 to 600 hp) ARFI-10 EMC Filter Installation Guide	3AFE68317941
Converter module capacitor reforming instructions	3BFE64059629

Drive firmware manuals and guides	
ACS800 Standard Control Program 7.x Firmware Manual and Adaptive Program Application Guide	3AFE64527592 3AFE64527274
ACS800 System Control Program 7.x Firmware Manual and Adaptive Program Application Guide	3AFE64670646 3AFE68420075
ACS800 Permanent Magnet Synchronous Machine Drive Application Program Supplement to Firmware Manual for ACS800 Standard Control Program 7.x	3AFE68437890
ACS800 Master/Follower Application Guide	3AFE64590430
ACS800 Pump Control Application Program 7.2 Firmware Manual	3AFE68478952
ACS800 Extruder Control Program Supplement	3AFE64648543
ACS800 Centrifuge Control Program Supplement	3AFE64667246
ACS800 Traverse Control Program Supplement	3AFE64618334
ACS800 Winch Control Program (+N698) Firmware Manual	3AUA0000031177
ACS800 Rod Pump Light Control Program Firmware Manual	3AUA0000005304

Option manuals and guides	
ACS800-01/04/11/31/104/104LC Safe torque off function (+Q967), Application guide	3AUA0000063373
RDCO-01/02/03 DDCS Communication Option Modules	3AFE64492209
AIMA-01 I/O Module Adapter User's Manual	3AFE64661442
Drive Module Trolley for ACS800-04, ACS800-U4, ACS800-04M with option +H354 and ACS800-07 Hardware Manual	3AFE68481562
ACS800 Single Drive Common DC Configurations Application Guide	3AFE64786555
Manuals and quick guides for I/O extension modules, fieldbus adapter, and so on.	

You can find manuals and other product documents in PDF format on the Internet. See Document library on the Internet on the inside of the back cover. For manuals not available in the Document library, contact your local ABB representative.

The code below opens an online listing of the manuals applicable to the product:

ACS800-04 manuals

ACS800-04/-04M (45 to 560 kW) ACS800-U4 (60 to 600 hp) drive modules

Hardware manual

Table of contents

1. Safety instructions

4. Mechanical installation

6. Electrical installation

9. Start-up and use

3AFE64671006 Rev H
EN
EFFECTIVE: 2023-12-01

© 2023 ABB. All Rights Reserved.

Table of contents

1. Safety instructions

What this chapter contains . . . 11
Use of warnings and notes . . . 11
Installation and maintenance work . . . 12
Grounding . . . 13
Mechanical installation and maintenance . . . 14
Printed circuit boards . . . 14
Fiber-optic cables . . . 15
Operation . . . 15
Permanent magnet motor . . . 16
Installation and maintenance work . . . 16
Start-up and operation . . . 16

2. Introduction to this manual

What this chapter contains . . . 17
Target audience . . . 17
Categorization according to the frame size . . . 17
Categorization according to the plus code . . . 18
Contents . . . 18
Installation, commissioning and operating flowchart . . . 19
Terms and abbreviations . . . 21

3. Operation principle and hardware description

What this chapter contains . . . 23
ACS800-04/U4 product overview . . . 24
ACS800-04M product overview . . . 25
Example configurations . . . 25
Type designation label . . . 26
Type code . . . 27
Main circuit and control interfaces . . . 29
Diagram . . . 29
Operation . . . 29
Printed circuit boards . . . 30
Motor control . . . 30
Connections of the RDCU control unit . . . 31

4. Mechanical installation

What this chapter contains . . . 33
Unpacking the unit . . . 33
Before installation . . . 34
Delivery check . . . 34
Requirements for the installation site . . . 34
Cooling air flow . . . 35
Cable channel in the floor below the cabinet . . . 35
Attaching the cabinet to the floor and wall . . . 35

Electric welding 35

5. Planning the electrical installation

What this chapter contains 37
Motor selection and compatibility 38
Protecting the motor insulation and bearings 39
Requirements table 40
Permanent magnet motor 44
Supply connection 45
Disconnecting device 45
EU 45
US 45
Fuses 45
Main contactor 45
Thermal overload and short-circuit protection 46
Thermal overload protection of the drive and the input and motor cables 46
Thermal overload protection of the motor 46
Protecting the motor against overload without the thermal model or temperature sensors 46
Protecting the motor and motor cable in short circuits 47
Protection against short circuits in the drive or supply cable 47
Ground fault protection 48
Emergency stop devices 48
Restarting after an emergency stop 48
Power-loss ride-through function 48
Prevention of unexpected start-up (option +Q950) 49
Terminal for the user connection 50
Safe torque off (option +Q967) 51
Terminal for the user connection 53
Selecting the power cables 54
Alternative power cable types 55
Motor cable shield 55
Additional US requirements 56
Conduit 56
Armored cable / shielded power cable 56
Power factor compensation capacitors 57
Equipment connected to the motor cable 57
Installation of safety switches, contactors, connection boxes, etc. 57
Bypass connection 57
Using a contactor between the drive and the motor 58
Protecting the relay output contacts and attenuating disturbances in case of inductive loads 59
Selecting the control cables 60
Relay cable 60
Control panel cable 60
Connection of a motor temperature sensor to the drive I/O 61
Installation sites above 2000 metres (6562 feet) 61
Routing the cables 62
Control cable ducts
. 62

6. Electrical installation

What this chapter contains . . . 63
Checking the insulation of the assembly . . . 63
Drive . . . 63
Supply cable . . . 63
Motor and motor cable . . . 64
IT (ungrounded) systems . . . 64
Installation of optional EMC filter (+E202) . . . 64
Example wiring diagram . . . 65
Power cable connection diagram . . . 66
Grounding of the cable shields . . . 67
Fastening US cable lugs . . . 68
Example mounting . . . 68
Connections of the RDCU . . . 69
Connecting the control cables to the RMIO board . . . 70
Connecting the shield wires at the RMIO board . . . 70
Securing the control cables mechanically . . . 70
Settings of the cooling fan transformer . . . 71
Installation of optional modules . . . 71
Cabling of I/O and fieldbus modules . . . 71
Pulse encoder module cabling . . . 72
Fiber-optic link . . . 72
Warning sticker . . . 72
Removing the protective covering from the drive module air outlet . . . 73

7. Motor control and I/O board (RMIO)

What this chapter contains . . . 75
Note on terminal labelling . . . 75
Note on external power supply . . . 76
Parameter settings . . . 76
External control connections (non-US) . . . 77
External control connections (US) . . . 78
RMIO board specifications . . . 79
Analogue inputs . . . 79
Constant voltage output . . . 79
Auxiliary power output . . . 79
Analogue outputs . . . 79
Digital inputs . . . 79
Relay outputs . . . 80
DDCS fiber-optic link . . . 80
24 V DC power input . . . 80

8. Installation checklist

What this chapter contains . . . 83
Checklist . . . 83

9. Start-up and use

What this chapter contains . . . 85
Start-up procedure . . . 86
Control panel . . . 87

Removing the control panel 87

10. Maintenance

What this chapter contains 89
Safety 89
Maintenance intervals 90
Layout 91
Heatsink 92
Fan 92
Replacing the fan (R7) 93
Replacing the fan (R8) 94
Capacitors 95
Reforming 95
Replacing the capacitor pack (R7) 95
Replacing the capacitor pack (R8) 96
Replacing the drive module 97
LEDs 98

11. Technical data

What this chapter contains 99
IEC data 99
Ratings 99
Symbols 101
Sizing 102
Derating 102
Temperature derating 102
Altitude derating 102
Fuses 103
Calculation example 104
Fuse tables 105
gG fuses 105
Ultrarapid (aR) fuses 107
Quick guide for selecting between gG and aR fuses 109
Cable types 111
Cable entries 112
Dimensions, weights and noise 112
Package dimensions and weights 113
NEMA data 114
Ratings 114
Symbols 115
Sizing 115
Derating 115
Fuses 116
UL class T and L fuses 116
Cable types 118
Cable Entries 119
Dimensions, weights and noise 119
Package dimensions and weights 119
Input power connection 120
Motor connection 120
Efficiency 121
Energy efficiency data (ecodesign) 121

Cooling 121
Degrees of protection 121
Prevention of unexpected start-up (+Q950): AGPS-21 board 121
Safe torque off (+Q967): ASTO-21 board 122
Ambient conditions 122
Materials 123
Applicable standards 124
CE marking 125
Compliance with the European Low Voltage Directive 125
Compliance with the European EMC Directive 125
Compliance with the European Machinery Directive 125
Compliance with EN 61800-3:2004 125
Definitions 125
First environment (drive of category C2) 126
Second environment (drive of category C3) 126
Second environment (drive of category C4) 127
“C-tick” marking 127
UL/CSA markings 128
UL checklist 128
Disclaimer 128
Cybersecurity disclaimer 128

12. Resistor braking

What this chapter contains 131
Availability of brake choppers and resistors for the ACS800 131
How to select the correct drive/chopper/resistor combination 132
Optional brake chopper and resistor(s) for the ACS800-04/04M/U4 133
Resistor installation and wiring 136
Protection of frame sizes R7 and R8 136
Brake circuit commissioning 137

13. Non-ABB du/dt filter selection

What this chapter contains 139
When a du/dt filter must be used 139
Filter and installation requirements 139

14. RDCO-01/02/03/04 DDCS communication option modules

What this chapter contains 141
Overview 141
Delivery check 142
Module layout 142
Installation 143
Installation procedure 143
Technical data 144

Further information

1

Safety instructions

What this chapter contains

This chapter contains the safety instructions that you must obey when you install, operate and service the drive. If you ignore them, physical injury or death may occur, or damage may occur to the drive, motor or driven equipment.

Read the safety instructions before you do work on the unit.

Use of warnings and notes

Warnings tell you about conditions that can cause serious injury or death or damage to the equipment. They also tell you how to avoid the danger.

Notes tell you about particular conditions or facts, or give additional information. The warning symbols in this document:

Dangerous voltage warning warns of high voltage which can cause physical injury and/or damage to the equipment.

General warning warns about conditions, other than those caused by electricity, which can result in physical injury and/or damage to the equipment.

Electrostatic discharge warning warns of electrostatic discharge which can damage the equipment.

Hot surface warning warns of hot surfaces which can cause physical injury.

Installation and maintenance work

These warnings are intended for all person that do work on the drive, motor cable or motor.

WARNING! If you ignore these safety instructions, physical injury or death, or damage to the equipment can occur:

- Only qualified electricians are allowed to install and maintain the drive.
- Do not do work on the drive, motor cable or motor when input power is connected. After you disconnect the input power, wait for 5 minutes to let the intermediate circuit capacitors discharge before you do work on the drive, motor or motor cable.
  Use a multimeter with a minimum impedance of 1 Mohm to measure that:
  1. The voltage between input phases U1, V1 and W1 and the frame is close to 0 V.
  2. The voltage between terminals UDC+ and UDC- and the frame is close to 0 V.
- Do not do work on the control cables when the power is applied to the drive or to the external control circuits. Externally-supplied control circuits can cause dangerous voltages inside the drive even when the main power of the drive is off.
- Do not do insulation or voltage withstand tests on the drive or drive modules.
- When you connect the motor cable, make sure that the phase order is correct.
- After you maintain or modify a drive safety circuit, or change circuit boards in the module, test the operation of the safety circuit according to the start-up instructions.
- Do not change the electrical installation of the drive except for the essential control and power connections. Such changes can affect the safety or operation of the drive. All customer-made changes are the responsibility of the customer.

Notes

- The motor cable terminals on the drive are at a dangerously high voltage when the input power is on, regardless of whether the motor operates.
- The brake control terminals (UDC+, UDC-, R+ and R- terminals) have a dangerous DC voltage (over 500 V).
- Depending on the external wiring, dangerous voltages (115 V, 220 V or 230 V) can be present on the terminals of relay outputs RO1 to RO3 or on the optional AGPS board (Prevention of unexpected start-up, option +Q950).
- The Prevention of unexpected start-up function (option +Q950) does not remove the voltage from the main circuit or auxiliary circuits.
- The Safe torque off function (option +Q967) does not remove the voltage from the main circuit or auxiliary circuits.

- At installation sites that are above 2000 m (6562 ft), the terminals of the RMIO board and option modules attached to the board do not fulfill the Protective Extra Low Voltage (PELV) requirements in EN 50178.

Grounding

These instructions are intended for all persons that are responsible for the grounding of the drive.

WARNING! If you ignore these instructions, it can cause physical injury, death, increased electromagnetic interference and equipment malfunction:

- Ground the drive, motor and adjoining equipment to ensure personnel safety in all circumstances, and to reduce electromagnetic emission and interference.
- Make sure that the grounding conductors are adequately sized as required by the safety regulations.
- In a multiple-drive installation, connect each drive separately to the protective earth (PE).
- In European CE compliant installations and in other installations where EMC emissions must be minimized, make a 360° high-frequency grounding of the cable entries in order to suppress electromagnetic disturbances.
  In addition, connect the cable shields to the protective earth (PE) in order to meet safety regulations.

Notes

- Power cable shields are suitable for equipment grounding conductors only when adequately sized to meet safety regulations.
- As the normal leakage current of the drive is more than 3.5 mA AC or 10 mA DC (EN 50178, 5.2.11.1), a fixed protective earth connection is required. In addition, we recommend that you use:

  • a cross-section of the protective earthing conductor of at least 10 mm^2 Cu or 16 mm^2 Al,

  or

  • an automatic disconnection of the supply in case of discontinuity of the protective earthing conductor,

  or

  • a second protective earthing conductor of the same cross-sectional area as the original protective earthing conductor.

Mechanical installation and maintenance

These instructions are intended for all persons that install and service the drive.

WARNING! If you ignore these instructions, physical injury or death, or damage to the equipment can occur:

- Handle the unit carefully.
- The drive is heavy. Lift the drive by the lifting lugs only. Do not tilt the unit. The unit will overturn at a tilt of approximately 6 degrees. Be careful when you move a drive that is on wheels. An overturning unit can cause physical injury.

Do not tilt!

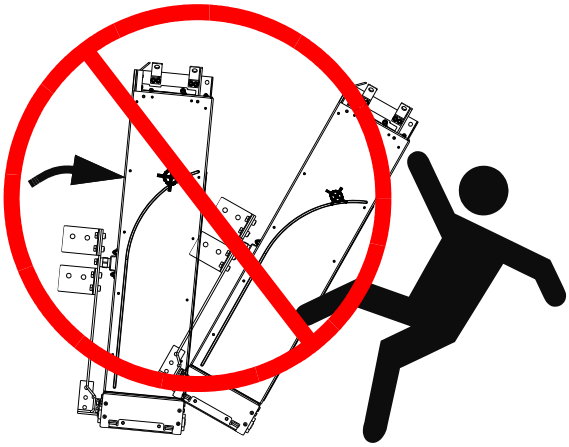

- Beware of hot surfaces. Some parts, such as heat sinks, are hot for a while after disconnection.
- Make sure that dust from drilling, boring and grinding does not go into the drive. Electrically conductive dust inside the unit can cause damage or faults.
- Make sure that cooling is sufficient.
- Do not fasten the drive by riveting or welding.

Printed circuit boards

WARNING! If you ignore these instructions, damage to the printed circuit boards can occur.

The printed circuit boards have components that are sensitive to electrostatic discharge. Use an ESD wrist band when you touch the printed circuit boards. Do not touch them unnecessarily.

Fiber-optic cables

WARNING! If you ignore these instructions, it can cause equipment malfunction and damage to the fiber-optic cables:

Handle the fiber-optic cables with care. When you disconnect fiber-optic cables, always hold the connector, not the cable. Do not touch the ends of the fibers with bare hands as the fiber is extremely sensitive to dirt. The minimum allowed bend radius is 35 mm (1.4 in.).

Operation

These warnings are intended for all persons that plan the operation of the drive or operate the drive.

WARNING! If you ignore these instructions, physical injury or death, or damage to the equipment can occur:

Before you adjust the drive and put it into service, make sure that the motor and all of the driven equipment are suitable for operation throughout the speed range provided by the drive. The drive can be adjusted to operate the motor at speeds above and below the speed provided by connecting the motor directly to the power line.

Before you activate the automatic fault reset or automatic restart functions of the drive control program, make sure that no dangerous situations can occur. These functions reset the drive automatically and continue operation after a fault or supply break. If these functions are activated, the installation must be clearly marked as defined in IEC/EN 61800-5-1, subclause 6.5.3, for example, "THIS MACHINE STARTS AUTOMATICALLY".

Do not control the motor with the disconnecting device. Use the control panel keys and , or commands through the I/O board of the drive. The maximum allowed number of charging cycles of the DC capacitors (that is, power-ups by applying power) is five in ten minutes.

Notes

If an external source for the start command is selected and it is ON, the drive (with the Standard Control Program) starts immediately after a fault reset unless the drive is configured for 3-wire (a pulse) start/stop.

When the control location is not set to Local (L not shown in the status row of the display), the Stop key on the control panel does not stop the drive. To stop the drive using the control panel, press the LOC/REM key and then the Stop key .

Permanent magnet motor

These are additional warnings for permanent magnet motor drives. If you ignore the instructions, physical injury or death, or damage to the equipment can occur.

Control a permanent magnet motor only with the ACS800 Permanent Magnet Synchronous Motor Drive Control Program.

Installation and maintenance work

WARNING! Do not do work on the drive when the permanent magnet motor turns. When the supply power is off and the inverter is stopped, a turning permanent magnet motor feeds power to the intermediate circuit of the drive and the supply connections become live.

Before you do installation and maintenance work on the drive:

- Stop the motor.
- Make sure that the motor cannot turn during work. Prevent the start-up of any drives in the same group by opening the Prevention of unexpected start switch (option +Q950) or the Safe torque off switch (option +Q967) and locking it. Make sure that no other system, such as hydraulic crawling drives, are able to turn the motor directly or through any mechanical connection such as felt, nip, rope, and so on.
- Make sure that there is no voltage on the drive power terminals:
  Alternative 1) Disconnect the motor from the drive with a safety switch or by other means. Measure that there is no voltage present on the drive input, output or DC terminals (U1, V1, W1, U2, V2, W2, UDC+, UDC-).
  Alternative 2) Measure that there is no voltage present on the drive input, output or DC terminals (U1, V1, W1, U2, V2, W2, UDC+, UDC-). Ground the drive output terminals temporarily by connecting them together and to the PE.
  Alternative 3) If it is possible, do both of the above.

Start-up and operation

WARNING! Do not run the motor over the rated speed. Motor overspeed leads to overvoltage which can damage the capacitors in the intermediate circuit of the drive.

2

Introduction to this manual

What this chapter contains

This chapter describes the intended audience and contents of this manual. It has a flowchart of steps to check the delivery, install and commission the drive. The flowchart refers to sections in this manual and in other documents.

Target audience

This manual is intended for persons who plan the installation, install, commission, use and service the drive. Read this manual before you do work on the drive. The reader is expected to know the fundamentals of electricity, wiring, electrical components and electrical schematic symbols.

This manual is written for a global audience. Both SI and imperial units are shown. Special US instructions for installations within the United States that must be installed per the National Electrical Code and local codes are marked with (US).

Categorization according to the frame size

Some instructions, technical data and dimensional drawings that concern specific frame sizes are marked with the symbol of the frame size R2, R3... or R8. The frame size is not marked on the drive designation label. To identify the frame size of your drive, see the rating tables in *Technical data* (page 99).

Categorization according to the plus code

The instructions, technical data and dimensional drawings that concern specific optional selections are marked with + codes, for example, +E202. The options included in the drive can be identified from the + codes on the type designation label. The + code selections are listed in *Operation principle and hardware description* (page 23).

Contents

A brief description of the chapters in this manual:

Safety instructions (page 11) give safety instructions for the installation, commissioning, operation and maintenance of the drive.

Introduction to this manual introduces this manual.

Operation principle and hardware description (page 23) describes the drive.

Mechanical installation (page 33) describes the mechanical installation of the drive cabinet.

Planning the electrical installation (page 37) instructs on the motor and cable selection, protections and cable routing.

Electrical installation (page 63) shows how to wire the drive.

Motor control and I/O board (RMIO) (page 75) shows external control connections and specifications of the motor control and I/O board.

Installation checklist (page 83) contains a list for checking the mechanical and electrical installation of the drive.

Start-up and use (page 85) describes the start-up procedure and use of the drive.

Maintenance (page 89) contains preventive maintenance instructions.

Technical data (page 99) contains the technical specifications of the drive, e.g. the ratings, sizes and technical requirements and provisions for fulfilling the requirements for CE and other markings.

Resistor braking (page 131) describes how to select, protect and wire optional brake choppers and resistors. The chapter also contains technical data.

Non-ABB du/dt filter selection (page 139) contains guidelines on selecting and installing a non-ABB d*u*/d*t* filter with the drive.

RDCO-01/02/03/04 DDCS communication option modules (page 141) contains a description of the RDCO-0x DDCS communication option modules connections and the technical specifications of the RDCO-0x modules.

Installation, commissioning and operating flowchart

Task	See
Identify the frame size of your drive, R7 or R8.	*Technical data* (page 99)
Plan the installation. Check the ambient conditions, ratings, required cooling air flow, input power connection, compatibility of the motor, motor connection, and other technical data. Select the cables.	*Technical data* (page 99) *Planning the electrical installation* (page 37) Option manual (if optional equipment is included)
Unpack and check the units. Check that all necessary optional modules and equipment are present and correct. Only intact units may be started up.	*Unpacking the unit* (page 33) If the converter has been non-operational for more than one year, the converter DC link capacitors need to be reformed. *Capacitors* (page 95)
Check the installation site.	*Before installation* (page 34) *Technical data* (page 99)
If the drive is about to be connected to an IT (ungrounded) system, check that the drive is not equipped with EMC filter +E202. **Note**: You cannot disconnect the EMC filter.	*Type code* (page 27)
Route the cables.	*Routing the cables* (page 62) For compliance with the European Union EMC Directive, see *CE marking* (page 125)
Check the insulation of the motor and the motor cable.	*Checking the insulation of the assembly* (page 63)
Install the drive. Connect the power cables. Connect the control and the auxiliary control cables.	*Electrical installation* (page 63), *Resistor braking* (page 131) (optional)
Commission the drive.	Appropriate firmware manual

Task	See
Commission the optional brake chopper (if present).	*Resistor braking* (page 131)
Operating of the drive: start, stop, speed control etc.	Appropriate firmware manual

Terms and abbreviations

Term / Abbreviation	Description
AGPS	Power supply board for IGBT gate driver boards. Used in implementation of the optional Prevention of unexpected start-up function.
AIMA	I/O module adapter. An extension unit for mounting I/O extension modules outside the drive unit.
ASTO	Safe torque off board. An optional board used to implement the Safe torque off function.
DDCS	Distributed drives communication system. A protocol used in optical fiber communication.
DTC	Direct torque control
EMC	Electromagnetic compatibility
GCUR	Current measurement board
GDIO	Charging diode board
GINT	Main circuit board
GRFC	Filter board
GRFCU	EMC filter unit
GVAR	Varistor board
IGBT	Insulated gate bipolar transistor
IT system	Type of supply network that has no (low-impedance) connection to ground/earth.
PCC	Point of common coupling
POUS	Prevention of unexpected start-up
RAIO	Analog I/O extension module
RCAN	CANopen adapter module
RCNA	ControlNet adapter module
RDCO	DDCS communication module
RDIO	Digital I/O extension module
RDNA	DeviceNet™ adapter module
RETA	Ethernet adapter module for Modbus/TCP and EtherNet/IP protocols
RFI	Radio-frequency interference
RIBA	InterBus-S adapter module
RLON	LonWorks® adapter module
RMBA	Modbus adapter module
RMBP	Modbus plus adapter module
RMIO	Supply/motor control and I/O board
RPBA	PROFIBUS-DP adapter module
RRFC	RFI filter board (filter board for meeting the EMC requirements)
RRIA	Resolver adapter module
RTAC	Pulse encoder adapter module
STO	Safe torque off
THD	Total harmonic distortion
TN system	Type of supply network that provides a direct connection to ground (earth)

3

Operation principle and hardware description

What this chapter contains

This chapter describes the construction and operating principle of the drive.

ACS800-04/U4 product overview

The ACS800-04/U4 is an IP00 drive module used to control AC motors. It is designed to be installed into a cabinet with base or wall fastening. The input cable terminals are at the top of the unit and the motor cable terminals are located at the left or right side of the unit. The unit is delivered pre-assembled with mounting pedestal and output busbars.

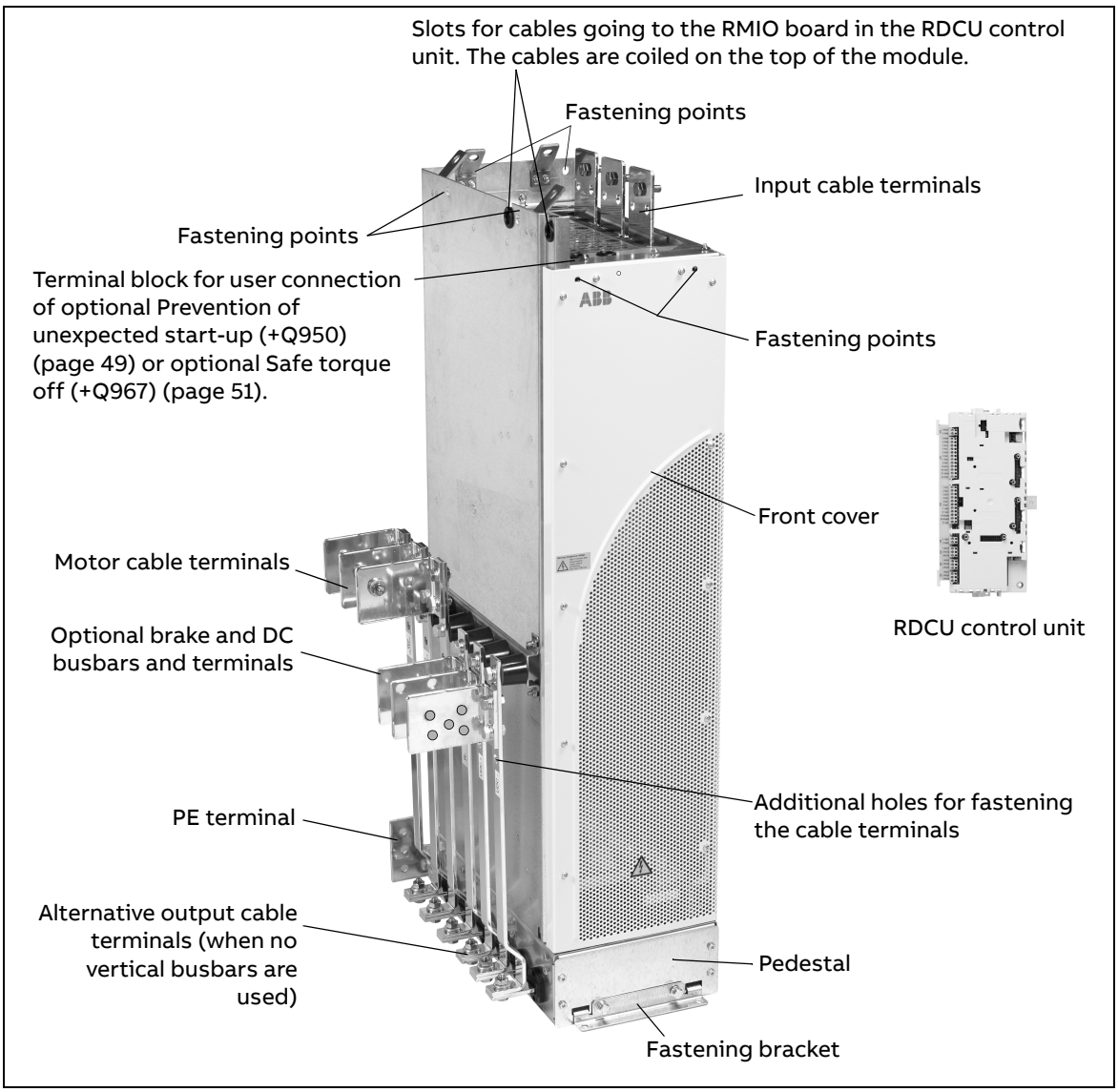

ACS800-04M product overview

The ACS800-04M is delivered as non-pre-assembled kits, which provide more alternatives in assembling the units than the basic ACS800-04.

Example configurations

Frame size R7

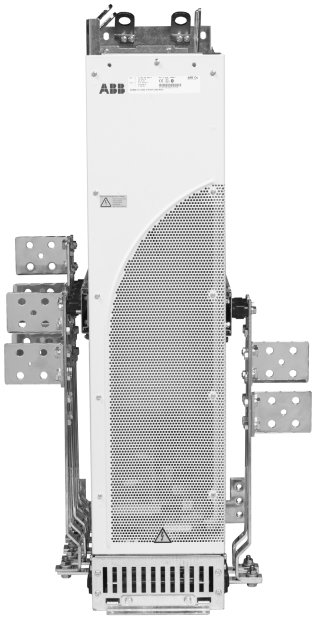

Motor and brake busbars on the left-hand long side of the module and DC busbars on the right-hand side

Motor and brake busbars on the right-hand long side of the module and DC busbars on the left-hand side

Output busbars on the short side of the module

Frame size R8

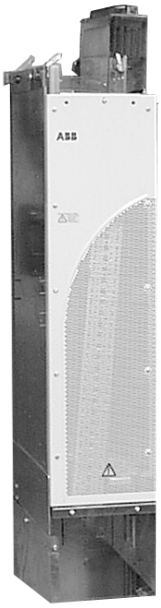

Frame size R7 with bottom exit (optional top entry busbar shroud and bottom exit shroud included). Output busbars are located at the base of the module.

RDCU control unit

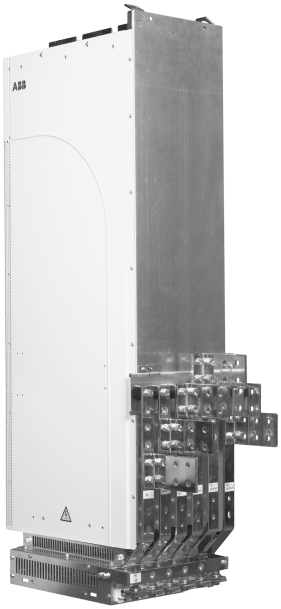

Output busbars on the short side of the module

Type designation label

The type designation label has an IEC and NEMA rating, C-UL US, and CSA markings, a type code and a serial number, which allow individual recognition of each unit. The first digit of the serial number refers to the manufacturing plant. The next four digits refer to the manufacturing year and week, respectively. The remaining digits complete the serial number.

The type designation label is located on the front cover and the serial number label inside the unit. Example labels:

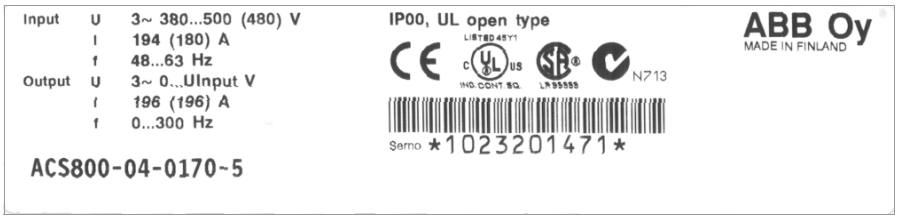

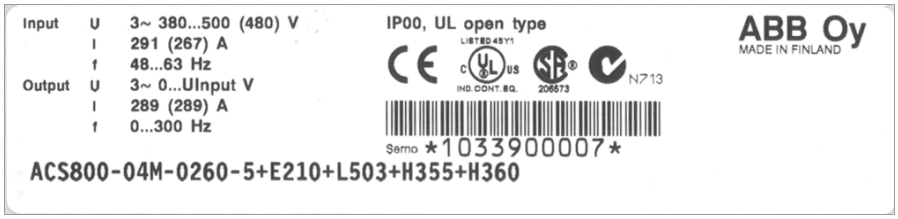

Type code

The type code contains information on the specifications and configuration of the drive. The first digits from left express the basic configuration (for example, ACS800-04-0170-5). The optional selections are given thereafter, separated by plus signs (for example, +E202). The main selections are described below. Not all selections are available for all types. For more information, refer to *ACS800 Ordering Information* (3AFY64556568, available on request).

Type code for ACS800-04 and ACS800-U4 pre-assembled units		
Selection	**Alternatives**	
Product series	ACS800 product series	
Type	04	Drive module. When no options are selected: 6-pulse diode input bridge, IP00, top entry of cables, side exit, RDCU drive control unit, no control panel, no EMC filter, Standard Control Program, pedestal with output on the long side, output busbar set for motor, base and wall mounting brackets, one set of manuals. Pre-assembled unit.
	U4	Drive module (USA). When no options are selected: 6-pulse diode bridge, UL open type, open chassis, top entry of cables, side exit, no control panel, no EMC filter, US version of the Standard Control Program (three-wire start/stop as default setting), common mode filter in frame size R8, pedestal with output on the long side, output busbar set for motor, base and wall mounting brackets, one set of manuals.
Size	Refer to *IEC data* (page 99) or *NEMA data* (page 114).	
Voltage range (nominal rating in bold)	2	208/220/**230**/240 VAC
	3	380/**400**/415 VAC
	5	380/400/415/440/460/480/**500** VAC
	7	525/575/600/**690** VAC
Option codes (+ codes)		
Resistor braking	D150	brake chopper and busbars for brake resistor and DC connection
Filter	E210	EMC/RFI filter for second environment TN/IT (grounded/ungrounded) system
	E208	common mode filter
Pedestal and output busbars	0H354	no pedestal
Control panel	J400	CDP 312R control panel including a 3-metre panel connection cable
	J410	RPMP-11 control panel mounting platform kit including a 3-metre panel connection cable but no control panel
	J413	RPMP-21 control panel holder
Fieldbus	K...	Refer to *ACS800 Ordering Information* (3AFY64556568).
I/O	L...	
Control program	N...	
Language of manual	R...	
Specialties	P901	coated boards
	P904	extended warranty
Safety features	Q950	Prevention of unexpected start-up (not to be used with +Q967), including 500 mm (19.68 in.) cable outside the drive module in frame size R7, 600 mm (23.62 in.) cable outside the drive module in frame size R8.
	Q967	Safe torque off (STO) (not to be used with +Q950), including 500 mm (19.68 in.) cable outside the drive module in frame size R7, 600 mm (23.62 in.) cable outside the drive module in frame size R8.

Type code for ACS800-04M non-pre-assembled units (delivered as kits)		
Selection	**Alternatives**	
Product series	ACS800 product series	
Type	04M	Drive module. When no options are selected: 6-pulse diode input bridge, IP00, top entry of cables, RDCU drive control unit, no control panel, no EMC filter, Standard Control Program, no pedestal, no output busbars, one set of manuals.
Size	Refer to *IEC data* (page 99) or *NEMA data* (page 114).	
Voltage range (nominal rating in bold)	2	208/220/**230**/240 VAC
	3	380/**400**/415 VAC
	5	380/400/415/440/460/480/**500** VAC
	7	525/575/600/**690** VAC
Option codes (+ codes)		
Shrouds	B060	Frame size R7: clear plastic shrouds for bottom exit kit (+H352) and input terminals. Frame size R8: clear plastic shrouds for vertical busbars and input terminals in bookshelf mounting (+H354 and +H355)
Resistor braking	D150	brake chopper
Filter	E202	EMC/RFI filter for first environment TN (grounded) system, restricted (the A limits)
	E210	EMC/RFI filter for second environment TN/IT (grounded/ungrounded) system
	E208	common mode filter
Pedestal and output busbars	H352	bottom exit kit for frame size R7
	H354	pedestal with output on the long side (bookshelf)
	H355	vertical busbars and support brackets for AC output connection
	H356	pedestal (and adapter with +H360) busbar kit for brake resistor and DC connection
	H360	pedestal with output on the short side (flat)
	H362	vertical busbars (and support brackets with +H360) for DC output connection
	H363	busbar kit for DC and brake outputs on different long sides of the pedestal (+H356 required, not available for +H360)
Control panel	J400	CDP 312R control panel including a 3-meter panel connection cable
	J410	RPMP-11 control panel mounting platform kit including a 3-meter panel connection cable but no control panel
	J413	RPMP-21 control panel holder
Fieldbus	K...	Refer to *ACS800 Ordering Information* (3AFY64556568).
I/O	L...	
Control program	N...	
Language of manual	R...	
Specialties	P901	coated boards
	P904	extended warranty
Safety features	Q950	Prevention of unexpected start-up (not to be used with +Q967), including 500 mm (19.68 in.) cable outside the drive module in frame size R7, 600 mm (23.62 in.) cable outside the drive module in frame size R8.
	Q967	Safe torque off (STO) (not to be used with +Q950), including 500 mm (19.68 in.) cable outside the drive module in frame size R7, 600 mm (23.62 in.) cable outside the drive module in frame size R8.

Note: Type code +0N664 means that the drive module has been installed inside a cabinet at the factory. This type code is for ABB internal use only.

Main circuit and control interfaces

Diagram

This diagram shows the control interfaces and the main circuit of the drive.

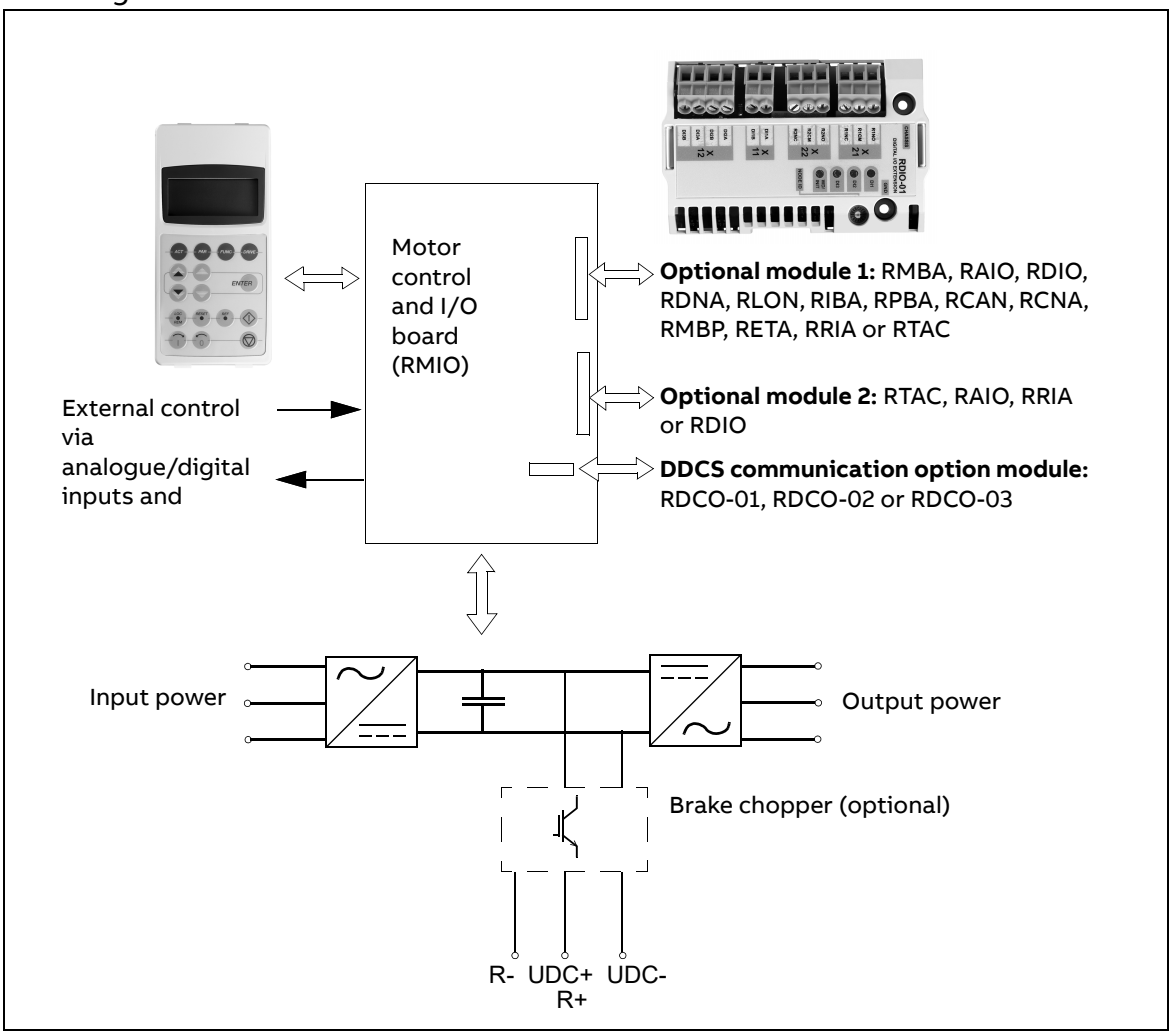

Operation

This table describes the operation of the main circuit in brief.

Component	Description
Six-pulse rectifier	Converts the three-phase AC voltage to DC voltage
Capacitor bank	Energy storage which stabilizes the intermediate circuit DC voltage
Six-pulse IGBT inverter	Converts the DC voltage to AC voltage and vice versa. The motor operation is controlled by switching the IGBTs.

Printed circuit boards

The drive contains the following printed circuit boards as standard:

- main circuit board (AINT)
- motor control and I/O board (RMIO) with a fiber-optic link to the AINT board
- input bridge control board (AINP)
- input bridge protection board (AIBP) which includes snubbers for the thyristors and varistors
- power supply board (APOW)
- gate driver control board (AGDR)
- diagnostics and panel interface board (ADPI)
- brake chopper control board (ABRC) with option +D150

Motor control

The motor control is based on the Direct Torque Control (DTC) method. Two phase currents and DC link voltage are measured and used for the control. The third phase current is measured for earth fault protection.

Connections of the RDCU control unit

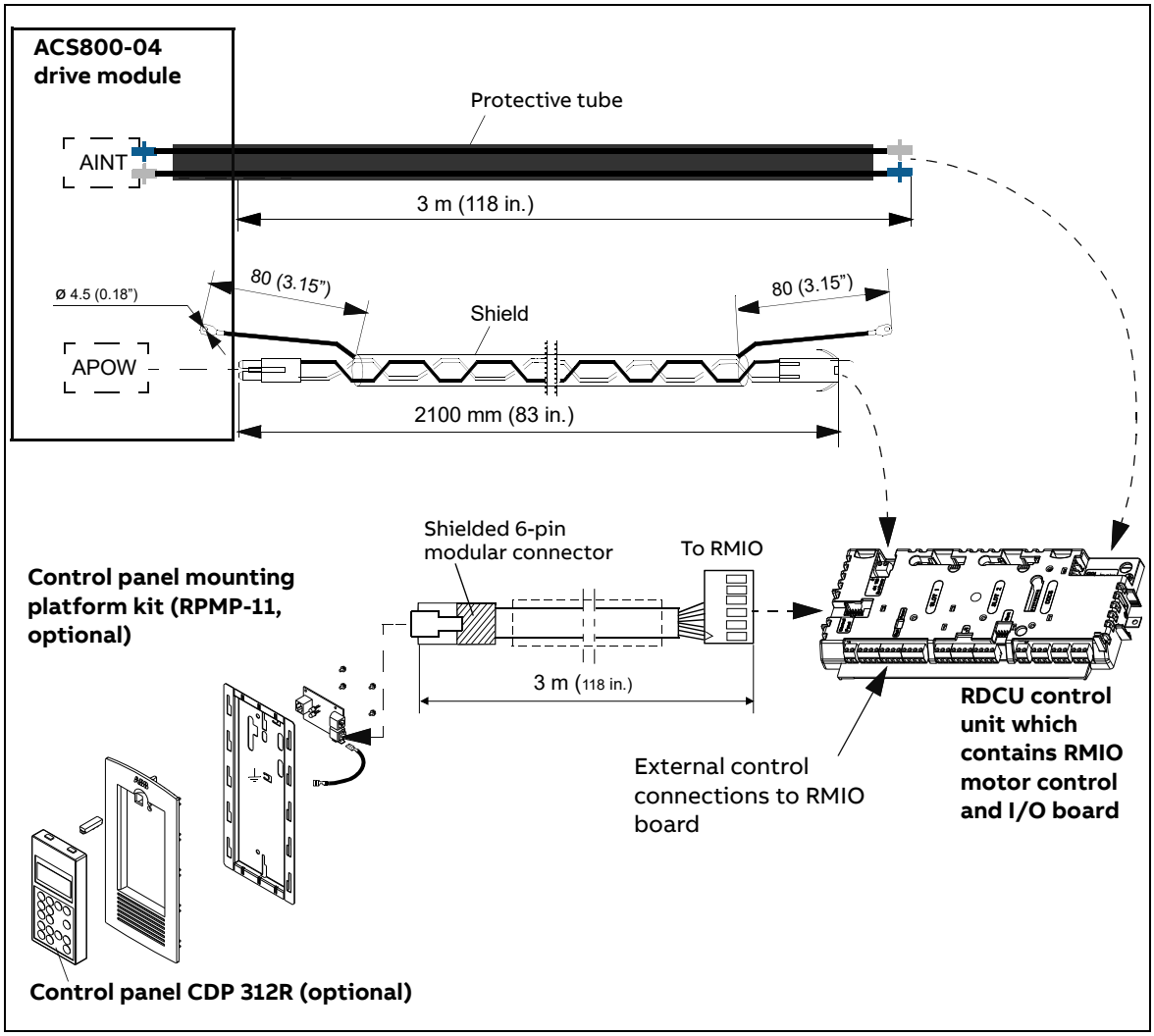

4

Mechanical installation

What this chapter contains

This chapter describes the mechanical installation of the drive cabinet. Obey the instructions given by the panel builder. For the mechanical assembly and dimensional drawings of the drive module, refer to *ACS800-04/04M/U4 Cabinet Installation* [3AFE68360323 (English)] and *ACS800-04/04M/U4 Drive Modules (45 to 560 kW, 60 to 600 hp) Rittal TS 8 Cabinet Installation* [3AFE68372330 (English)].

Unpacking the unit

The drive delivery contains:

- Drive module including factory installed options such as optional modules (inserted onto the RMIO board in the RDCU control unit)
- Residual voltage warning stickers
- Hardware manual
- Appropriate firmware manuals and guides
- Appropriate optional module manuals
- Delivery documents

Note: Do not discard any important components that are in separate cardboard boxes, for example, under the drive module.

To unpack the package, cut the bands (A) and remove the outer box (B) and sleeve (C).

Note: This figure shows the package of an ACS800-04 module, frame size R7. There can also be additional accessory boxes that are not shown in the figure.

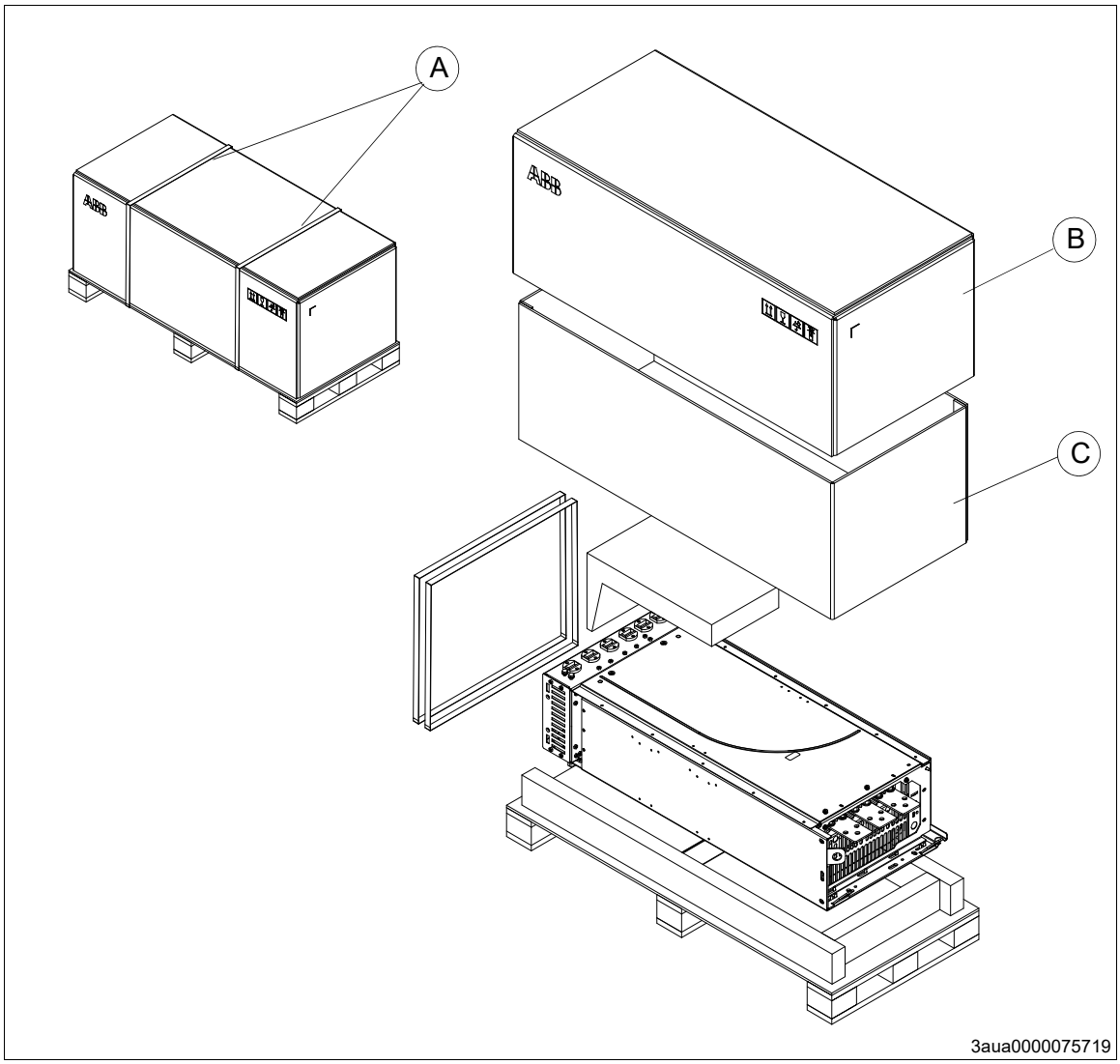

Before installation

Delivery check

Make sure that all of the items listed in *Unpacking the unit* (page 33) are present.

Make sure that there are no signs of damage.

Before you attempt installation and operation, read the information on the type designation label of the drive to make sure that the unit is of the correct type. See *Type designation label* (page 26).

Requirements for the installation site

Examine the installation site according to the requirements that follow. See *Ambient conditions* (page 122) for the operation conditions.

Cooling air flow

Provide the drive with the amount of clean cooling air given in IEC data (page 99) or *NEMA data* (page 114).

Cable channel in the floor below the cabinet

When a cable channel is constructed below the cabinet, make sure that the cabinet weight is on the sections that the floor carries.

Example cabinet frame viewed from above

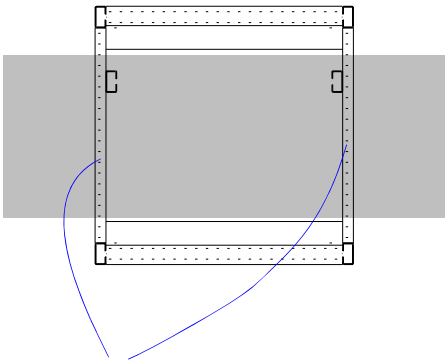

With heavy cabinets, support the structural C-sections from below.

Example cabinet: side view

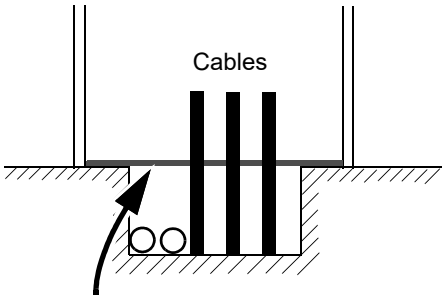

Prevent the cooling air flow from the cable channel to the cabinet by bottom plates. To ensure the degree of protection for the cabinet use the original bottom plates delivered with the unit. With user-defined cable entries take care of the degree of protection, fire protection and EMC compliance.

Attaching the cabinet to the floor and wall

Attach the cabinet to the floor and wall/roof according to the panel builder's instructions, for example, with outside brackets or holes inside the cabinet.

Electric welding

It is not recommended to fasten the cabinet by welding.

If the preferred fastening methods (clamp or bolt through the holes in the cabinet) cannot be used:

Connect the return conductor of the welding equipment to the cabinet frame at the bottom within 0.5 m of the welding point.

WARNING! If the welding return wire is not connected correctly, the welding circuit can damage electronic circuits in the cabinet. Do not inhale the welding fumes.

5

Planning the electrical installation

What this chapter contains

This chapter contains the instructions that you must follow when selecting the motor, cables, protections, cable routing and way of operation for the drive system.

The installation must always be designed and done according to applicable local laws and regulations. ABB does not assume any liability whatsoever for any installation which breaches the local laws and/or other regulations. Furthermore, if the recommendations given by ABB are not followed, the drive may experience problems that the warranty does not cover.

Motor selection and compatibility

1. Select the motor according to the rating tables in *Technical data* (page 99). Use the DriveSize PC tool if the default load cycles are not applicable.
2. Make sure that the motor ratings are in the allowed ranges of the drive control program:
   - motor nominal voltage is 1/2 ... 2 · U_N of the drive
   - motor nominal current is 1/6 ... 2 · I_{2hd} of the drive in DTC control and 0 ... 2 · I_{2hd} in scalar control. The control mode is selected by a drive parameter.
3. Make sure that the motor voltage rating meets the application requirements:

Resistor braking	Motor voltage rating
no resistor braking is in use	U_N
frequent or long term brake cycles will be used	U_{ACeq1}

U_N = rated input voltage of the drive

U_{ACeq1} = $U_{DC}/1.35$

U_{ACeq1} = the equivalent AC power source voltage of the drive in V AC.

U_{DC} = the maximum DC link voltage of the drive in V DC.
For resistor braking: U_{DC}= 1.21 × nominal DC link voltage.
Note: Nominal DC link voltage is U_N × 1.35 in V DC.

See Note 7 below the *Requirements table* (page 40).

4. Consult the motor manufacturer before using a motor in a drive system where the motor nominal voltage differs from the AC power source voltage.
5. Make sure that the motor insulation system withstands the maximum peak voltage in the motor terminals. See the *Requirements table* (page 40) for the required motor insulation system and drive filtering.
   Example: When the supply voltage is 440 V and a drive with a diode supply is operating in motor mode only, the maximum peak voltage in the motor terminals can be approximated as follows: 440 V · 1.35 · 2 = 1190 V. Check that the motor insulation system withstands this voltage.

Protecting the motor insulation and bearings

The output of the drive comprises – regardless of the output frequency – of pulses of approximately 1.35 times the equivalent mains network voltage with a very short rise time. This is true for all drives employing modern IGBT inverter technology.

The voltage of the pulses can be almost double at the motor terminals, depending on the attenuation and reflection properties of the motor cable and the terminals. This in turn can cause additional stress on the motor and motor cable insulation.

Modern variable speed drives with their fast rising voltage pulses and high switching frequencies can generate current pulses that flow through the motor bearings, which can gradually erode the bearing races and rolling elements.

The stress on motor insulation can be avoided by using optional ABB d*u*/d*t* filters. The d*u*/d*t* filters also reduce bearing currents.

To avoid damage to motor bearings, the cables must be selected and installed according to the instructions given in the hardware manual. In addition, insulated N-end (non-driven end) bearings and output filters from ABB must be used according to the following table.

Two types of filters are used individually or in combination:

- Optional d*u*/d*t* filter (protects motor insulation system and reduces bearing currents).
- Common mode filter (mainly reduces bearing currents).

Requirements table

The following table shows how to select the motor insulation system and when an optional ABB d*u*/d*t* filter, insulated N-end (non-driven end) motor bearings and ABB common mode filters are required. Ignoring the requirements or improper installation may shorten motor life or damage the motor bearings and voids the warranty.

Manufacturer	Motor type	Nominal mains voltage (AC line voltage)	Requirement for			
			Motor insulation system	ABB d*u*/d*t* filter, insulated N-end bearing and ABB common mode filter		
				P_N < 100 kW and frame size < IEC 315	100 kW ≤ P_N < 350 kW or frame size ≥ IEC 315	P_N ≥ 350 kW or frame size ≥ IEC 400
				P_N < 134 hp and frame size < NEMA 500	134 hp ≤ P_N < 469 hp or frame size ≥ NEMA 500	P_N ≥ 469 hp or frame size > NEMA 580
ABB	Random-wound M2_, M3_ and M4_	U_N ≤ 500 V	Standard	-	+ N	+ N + CMF
		500 V < U_N ≤ 600 V	Standard	+ d*u*/d*t*	+ d*u*/d*t* + N	+ d*u*/d*t* + N + CMF
			or			
			Reinforced	-	+ N	+ N + CMF
		600 V < U_N ≤ 690 V (cable length ≤ 150 m)	Reinforced	+ d*u*/d*t*	+ d*u*/d*t* + N	+ d*u*/d*t* + N + CMF
		600 V < U_N ≤ 690 V (cable length > 150 m)	Reinforced	-	+ N	+ N + CMF
	Form-wound HX_ and AM_	380 V < U_N ≤ 690 V	Standard	n.a.	+ N + CMF	P_N < 500 kW: + N + CMF
						P_N ≥ 500 kW: + N + CMF + d*u*/d*t*
	Old* form-wound HX_ and modular	380 V < U_N ≤ 690 V	Check with the motor manufacturer.	+ d*u*/d*t* with voltages over 500 V + N + CMF		
	Random-wound HX_ and AM_ **	0 V < U_N ≤ 500 V	Enamelled wire with fibre glass taping	+ N + CMF		
		500 V < U_N ≤ 690 V		+ d*u*/d*t* + N + CMF		
	HDP	Consult the motor manufacturer.				

Manufacturer	Motor type	Nominal mains voltage (AC line voltage)	Requirement for			
			Motor insulation system	ABB d*u*/d*t* filter, insulated N-end bearing and ABB common mode filter		
				P_N < 100 kW and frame size < IEC 315	100 kW ≤ P_N < 350 kW or frame size ≥ IEC 315	P_N ≥ 350 kW or frame size ≥ IEC 400
				P_N < 134 hp and frame size < NEMA 500	134 hp ≤ P_N < 469 hp or frame size ≥ NEMA 500	P_N ≥ 469 hp or frame size > NEMA 580
NON-ABB	Random-wound and form-wound	U_N ≤ 420 V	Standard: $\hat{U}_{LL}$ = 1300 V	-	+ N or CMF	+ N + CMF
		420 V < U_N ≤ 500 V	Standard: $\hat{U}_{LL}$ = 1300 V	+ d*u*/d*t*	+ d*u*/d*t* + N or + d*u*/d*t* + CMF	+ d*u*/d*t* + N + CMF
			or			
			Reinforced: $\hat{U}_{LL}$ = 1600 V, 0.2 microsecond rise time	-	+ N or CMF	+ N + CMF
		500 V < U_N ≤ 600 V	Reinforced: $\hat{U}_{LL}$ = 1600 V	+ d*u*/d*t*	+ d*u*/d*t* + N or + d*u*/d*t* + CMF	+ d*u*/d*t*+ N + CMF
			or			
			Reinforced: $\hat{U}_{LL}$ = 1800 V	-	+ N or CMF	+ N + CMF
		600 V < U_N ≤ 690 V	Reinforced: $\hat{U}_{LL}$ = 1800 V	+ d*u*/d*t*	+ d*u*/d*t* + N	+ d*u*/d*t* + N + CMF
			Reinforced: $\hat{U}_{LL}$ = 2000 V, 0.3 microsecond rise time ***	-	N + CMF	N + CMF

* manufactured before 1.1.1998

** For motors manufactured before 1.1.1998, check for additional instructions with the motor manufacturer.

*** If the intermediate DC circuit voltage of the drive is increased from the nominal level by resistor braking or by the IGBT Supply Control Program (parameter selectable function), check with the motor manufacturer if additional output filters are needed in the applied drive operation range.

Note 1: The abbreviations used in the table:

Abbreviation	Definition
U_N	nominal voltage of the supply network
$\hat{U}_{LL}$	peak line-to-line voltage at motor terminals which the motor insulation must withstand
P_N	motor nominal power
d*u*/d*t*	d*u*/d*t* filter at the output of the drive
CMF	common mode filter (option +E208)
N	N-end bearing: insulated motor non-driven end bearing
n.a.	Motors of this power range are not available as standard units. Consult the motor manufacturer.

Note 2: *Explosion-safe (EX) motors*

The motor manufacturer should be consulted regarding the construction of the motor insulation and additional requirements for explosion-safe (EX) motors.

Note 3: *ABB high-output motors and IP23 motors*

The rated output power of high output motors is higher than what is stated for the particular frame size in EN 50347:2001. This table shows the requirements for ABB random-wound motor series (for example, M3AA, M3AP and M3BP).

Nominal AC supply voltage	**Requirement for**			
	Motor insulation system	**ABB d*u*/d*t* and common mode filters, insulated N-end motor bearings**		
		P_N < 100 kW	**100 kW ≤ P_N < 200 kW**	**P_N ≥ 200 kW**
		P_N < 140 hp	**140 hp ≤ P_N < 268 hp**	**P_N ≥ 268 hp**
U_N ≤ 500 V	Standard	-	+ N	+ N + CMF
500 V < U_N ≤ 600 V	Standard	+ d*u*/d*t*	+ N + d*u*/d*t*	+ N + d*u*/d*t* + CMF
	or			
	Reinforced	-	+ N	+ N + CMF
600 V < U_N ≤ 690 V	Reinforced	+ d*u*/d*t*	+ N + d*u*/d*t*	+ N + d*u*/d*t* + CMF

Note 4: *Non-ABB high-output and IP23motors*

The rated output power of high output motors is higher than what is stated for the particular frame size in EN 50347:2001. The table below shows the requirements for random-wound and form-wound non-ABB motors with nominal power smaller than 350 kW. For bigger motors, consult the motor manufacturer.

Nominal AC supply voltage	**Requirement for**		
	Motor insulation system	**ABB d*u*/d*t* filter, insulated N-end bearing and ABB common mode filter**	
		P_N < 100 kW or frame size < IEC 315	**100 kW ≤ P_N < 350 kW or IEC 315 ≤ frame size < IEC 400**
		P_N < 134 hp or frame size < NEMA 500	**134 hp ≤ P_N < 469 hp or NEMA 500 ≤ frame size ≤ NEMA 580**
U_N ≤ 420 V	Standard: $\hat{U}_{LL}$ = 1300 V	+ N or CMF	+ N + CMF
420 V < U_N ≤ 500 V	Standard: $\hat{U}_{LL}$ = 1300 V	+ d*u*/d*t* + (N or CMF)	+ N + d*u*/d*t* + CMF
	or		
	Reinforced: $\hat{U}_{LL}$ = 1600 V, 0.2 microsecond rise time	+ N or CMF	+ N + CMF
500 V < U_N ≤ 600 V	Reinforced: $\hat{U}_{LL}$ = 1600 V	+ d*u*/d*t* + (N or CMF)	+ d*u*/d*t* + N + CMF
	or		
	Reinforced: $\hat{U}_{LL}$ = 1800 V	+ N or CMF	+ N + CMF
600 V < U_N ≤ 690 V	Reinforced: $\hat{U}_{LL}$ = 1800 V	+ N + d*u*/d*t*	+ N + d*u*/d*t* + CMF
	Reinforced: $\hat{U}_{LL}$ = 2000 V, 0.3 microsecond rise time ***	N + CMF	N + CMF

*** If the intermediate DC circuit voltage of the drive is increased from the nominal level by resistor braking, check with the motor manufacturer if additional output filters are needed in the applied drive operation range.

Note 5: *HXR and AMA motors*

All AMA machines (manufactured in Helsinki) for drive systems have form-wound windings. All HXR machines manufactured in Helsinki starting 1.1.1998 have form-wound windings.

Note 6: *ABB motors of types other than M2_, M3_, HX_ and AM_*

Use the selection criteria given for non-ABB motors.

Note 7: *Resistor braking of the drive*

When the drive is in braking mode for a large part of its operation time, the intermediate circuit DC voltage of the drive increases, the effect being similar to increasing the supply voltage by up to 20 percent. Consider the voltage increase when you determine the motor insulation requirement.

Example: Motor insulation requirement for a 400 V application must be selected as if the drive were supplied with 480 V.

Note 8: *Calculating the rise time and the peak line-to-line voltage*

The peak line-to-line voltage at the motor terminals generated by the drive as well as the voltage rise time depend on the cable length. The requirements for the motor insulation system given in the table are “worst case” requirements covering installations with 30-meter and longer cables. The rise time can be calculated as follows: $\triangle t = 0.8 \cdot \hat{U}_{LL}/(du/dt)$. Read $\hat{U}_{LL}$ and du/dt from the diagrams below. Multiply the values of the graph by the supply voltage (U_N). In case of drives with an IGBT supply unit or resistor braking, the $\hat{U}_{LL}$ and du/dt values are approximately 20% higher.

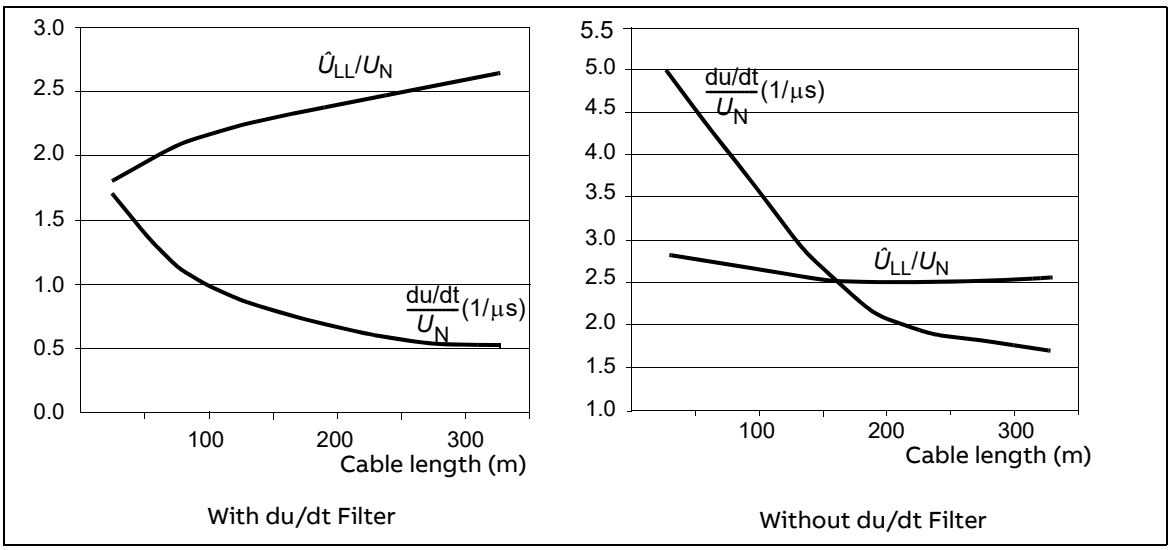

Note 9: Sine filters protect the motor insulation system. Therefore, du/dt filter can be replaced with a sine filter. The peak phase-to-phase voltage with the sine filter is approximately 1.5 × U_N.

Note 10: Common mode filter is available as an option (+E208) or as a separate kit (one box with three rings for one cable).

Permanent magnet motor

Only one permanent magnet motor can be connected to the inverter output.

ABB recommends a safety switch between the permanent magnet motor and the drive output. The switch isolates the motor during maintenance work.

Supply connection

Disconnecting device

Install a hand-operated input disconnecting device between the AC power source and the drive. The disconnecting device must be of a type that can be locked to the open position for installation and maintenance work.

EU

To meet the European Union Directives, according to standard EN/IEC 60204-1, Safety of Machinery, the disconnecting device must be one of the following types:

- Switch-disconnector of utilization category AC-23B (EN 60947-3)
- Disconnector that has an auxiliary contact that in all cases causes switching devices to break the load circuit before the opening of the main contacts of the disconnector (EN 60947-3)
- Circuit breaker suitable for isolation in accordance with EN 60947-2

US

The disconnecting device must conform to the applicable safety regulations.

Fuses

See *Thermal overload and short-circuit protection* (page 46).

Main contactor

If used, dimension the contactor according to the nominal voltage and current of the drive. The utilization category (IEC 947-4) is AC-1.

Thermal overload and short-circuit protection

Thermal overload protection of the drive and the input and motor cables

The drive protects itself and the input and motor cables against thermal overload when the cables are dimensioned according to the nominal current of the drive. No additional thermal protection devices are needed.

WARNING! If the drive is connected to multiple motors, a separate thermal overload switch or a circuit breaker must be used to protect each cable and motor. These devices may require a separate fuse to cut off the short-circuit current.

Thermal overload protection of the motor

According to regulations, the motor must be protected against thermal overload and the current must be switched off when overload is detected. The drive includes a motor thermal protection function that protects the motor and switches off the current when necessary. Depending on a drive parameter value, the function either monitors a calculated temperature value (based on a motor thermal model) or an actual temperature indication given by motor temperature sensors. The user can tune the thermal model further by feeding in additional motor and load data.

The most common temperature sensors are:

- Motor sizes IEC180…225: thermal switch (for example, Klixon)
- motor sizes IEC200…250 and larger: PTC or Pt100

See the firmware manual for more information on the motor thermal protection, and the connection and use of the temperature sensors.

Protecting the motor against overload without the thermal model or temperature sensors

Motor overload protection protects the motor against overload without using the motor thermal model or temperature sensors.

Motor overload protection is required and specified by multiple standards including the US National Electric Code (NEC) and the common IEC/UL 61800-5-1 standard in conjunction with IEC/UL 60947-4-1. The standards allow for motor overload protection without external temperature sensors.

The protection feature of the drive allows the user to specify the class of operation in the same manner as the overload relays are specified in standards IEC/UL 60947-4-1 and NEMA ICS 2.

The motor overload protection supports thermal memory retention and speed sensitivity.

For more information, see the drive firmware manual.

Protecting the motor and motor cable in short circuits

The drive protects the motor cable and motor in a short-circuit situation when:

- the motor cable is sized correctly
- the motor cable type complies with the motor cable selection guidelines by ABB
- the cable length does not exceed the allowed maximum length specified for the drive
- the setting of parameter 99.10 Motor nominal power is equal to the value on the motor rating plate.

The electronic power output short-circuit protection circuitry meets the requirements of IEC 60364-4-41 2005/AMD1, Clause 411.

Protection against short circuits in the drive or supply cable

Arrange the protection according to the following guide lines.

Circuit diagram	Short-circuit protection
DRIVE IS NOT EQUIPPED WITH INPUT FUSES	
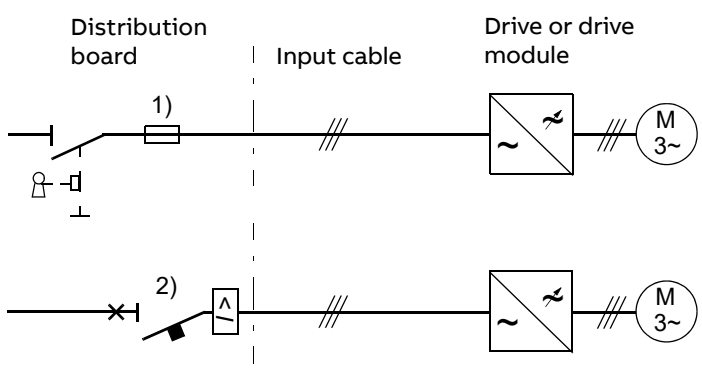	Protect the drive and input cable with fuses or a circuit breaker. See footnotes 1) and 2).

1) Size the fuses according to instructions given in chapter *Technical data* (page 99). The fuses will protect the input cable in short-circuit situations, restrict drive damage and prevent damage to adjoining equipment in case of a short circuit in the drive.

2) Circuit breakers which have been tested by ABB with the ACS800 can be used. Fuses must be used with other circuit breakers. Contact your local ABB representative for the approved breaker types and supply network characteristics.
The protective characteristics of circuit breakers depend on the type, construction and settings of the breakers. There are also limitations pertaining to the short-circuit capacity of the supply network.

WARNING! Due to the inherent operating principle and construction of circuit breakers, independent of the manufacturer, hot ionized gases may escape from the breaker enclosure in case of a short circuit. To ensure safe use, special attention must be paid to the installation and placement of the breakers. Follow the manufacturer's instructions.

WARNING! In the USA, do not use circuit breakers without fuses.

Ground fault protection

The drive has ground fault protection in the motor and motor cable. This is not a personal safety or a fire protection feature. The ground fault protection can be disabled with a parameter, refer to the applicable firmware manual.

The EMC filter of the drive has capacitors between the main circuit and the frame. These capacitors and long motor cables increase the ground leakage current and can cause fault-current circuit breakers to function.

Emergency stop devices

For safety reasons, install the emergency stop devices at each operator control station and at other operating stations where an emergency stop may be needed.

Note: Pressing the stop key (⊗) on the control panel of the drive does not generate an emergency stop of the motor or separate the drive from dangerous potential.

Restarting after an emergency stop

After an emergency stop, the emergency stop button must be released and the drive started by turning the operating switch of the drive from position “ON” to “START”.

Power-loss ride-through function

The power-loss ride-through function is activated when parameter 20.06 UNDERVOLTAGE CTRL is set to ON (default in Standard Control Program).

Prevention of unexpected start-up (option +Q950)

The drive can have an option for the prevention of unexpected start-up function according to standards:

- EN/IEC 60204-1:1997
- ISO/DIS 14118:2000
- EN 1037:1996
- EN ISO 12100:2003
- EN 954-1:1996
- EN ISO 13849-2:2003

The Prevention of unexpected start-up (POUS) function disables the control voltage of the power semiconductors, and prevents the drive from generating the AC voltage required to rotate the motor. With this function, short tasks (such as cleaning) or maintenance work on non-electrical parts of the machinery can be done without switching off the AC power supply to the drive.

The operator activates the Prevention of unexpected start-up function by opening a switch on a control desk. An indicating lamp on the control desk comes on to indicate that the function is active. The switch can be locked out.

The user must install on a control desk near the machinery:

- Switching/disconnecting device for the circuitry. “Means shall be provided to prevent inadvertent, and/or mistaken closure of the disconnecting device.” EN 60204-1:1997.
- Indicating lamp: on = the drive is disabled, off = drive can operate.
- Safety relay (type BD5935 has been approved by ABB)

WARNING! The Prevention of unexpected start-up function does not disconnect the voltage of the main and auxiliary circuits from the drive. Therefore maintenance work on electrical parts of the drive or the motor can only be carried out after isolating the drive system from the main supply.

The Prevention of unexpected start-up function is not intended for stopping the drive. If the Prevention of unexpected start-up function is activated when the drive is running, the control voltage of the power semiconductors is cut off and the motor coasts to a stop.

Terminal for the user connection

The POUS function includes an AGPS board that is installed at the factory.

This figure shows the location of the AGPS board and the terminal for the POUS user connection.

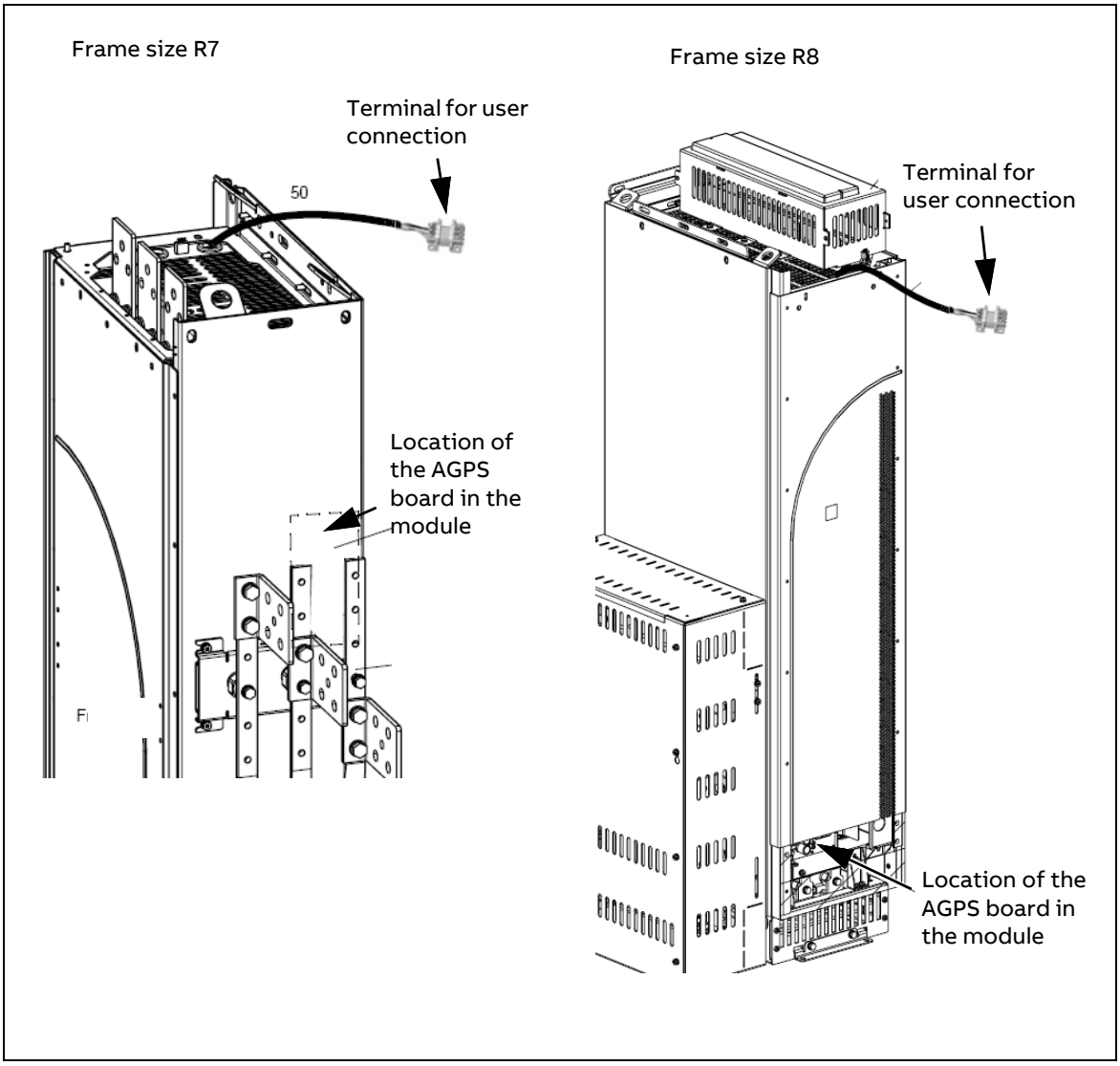

Safe torque off (option +Q967)

The drive supports the Safe torque off (STO) function according to these standards:

- EN 61800-5-2:2007
- EN ISO 13849-1:2008/AC:2009
- EN ISO 13849-2:2012
- IEC 61508 ed. 1
- EN 62061:2005/AC:2010
- EN /IEC 60204-1:2006/AC:2010

The function also corresponds to an uncontrolled stop in accordance with category 0 of EN/IEC 60204-1 and Prevention of unexpected start-up of EN 1037.

The STO may be used where power removal is required to prevent an unexpected start. The function disables the control voltage of the power semiconductors of the drive output stage, thus preventing the inverter from generating the voltage required to rotate the motor (see the diagram below). By using this function, short-time operations (such as cleaning) or maintenance work on non-electrical parts of the machinery can be performed without switching off the power supply to the drive.

An example circuit diagram is shown below.

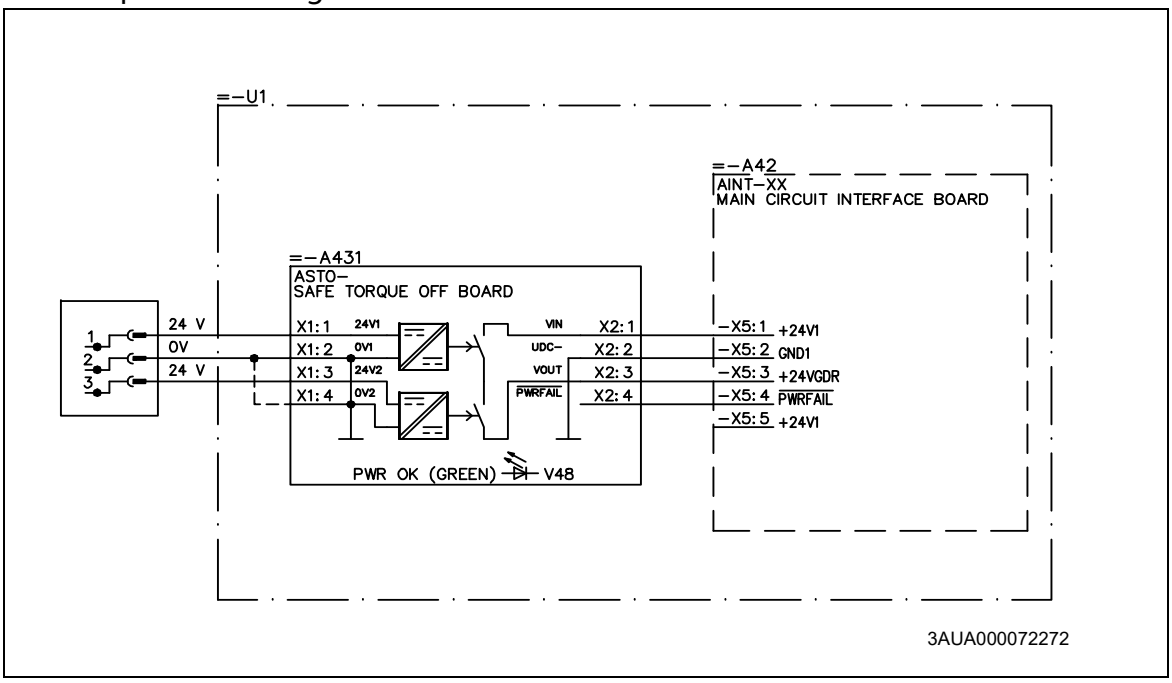

WARNING! The Safe torque off function does not disconnect the voltage of the main and auxiliary circuits from the drive. Therefore, maintenance work on electrical parts of the drive or the motor can only be carried out after isolating the drive system from the main supply.

The Safe torque off function can be used to stop the drive in emergency stop situations. In the normal operating mode, use the Stop command instead. If the Safe torque off function is activated when the drive is running, the control voltage of the power semiconductors is cut off and the motor coasts to a stop. If this is not acceptable, for example, causes danger, the drive and machinery must be stopped using the appropriate stopping mode before using this function.

Note concerning permanent magnet motor drives in case of a multiple IGBT power semiconductor failure: In spite of the activation of the Safe torque off function, the drive system can produce an alignment torque which maximally rotates the motor shaft by 180/*p* degrees. *p* denotes the pole pair number.

For more information on the STO function and the relevant safety data, see *ACS800-01/04/11/31/104/104LC Safe torque off function (+Q967), Application guide* (3AUA0000063373 [English]).

Terminal for the user connection

The STO function includes an ASTO board that is installed in the drive module at the factory.

This figure shows the location of the ASTO board and the terminal for the STO user connection in the drive module.

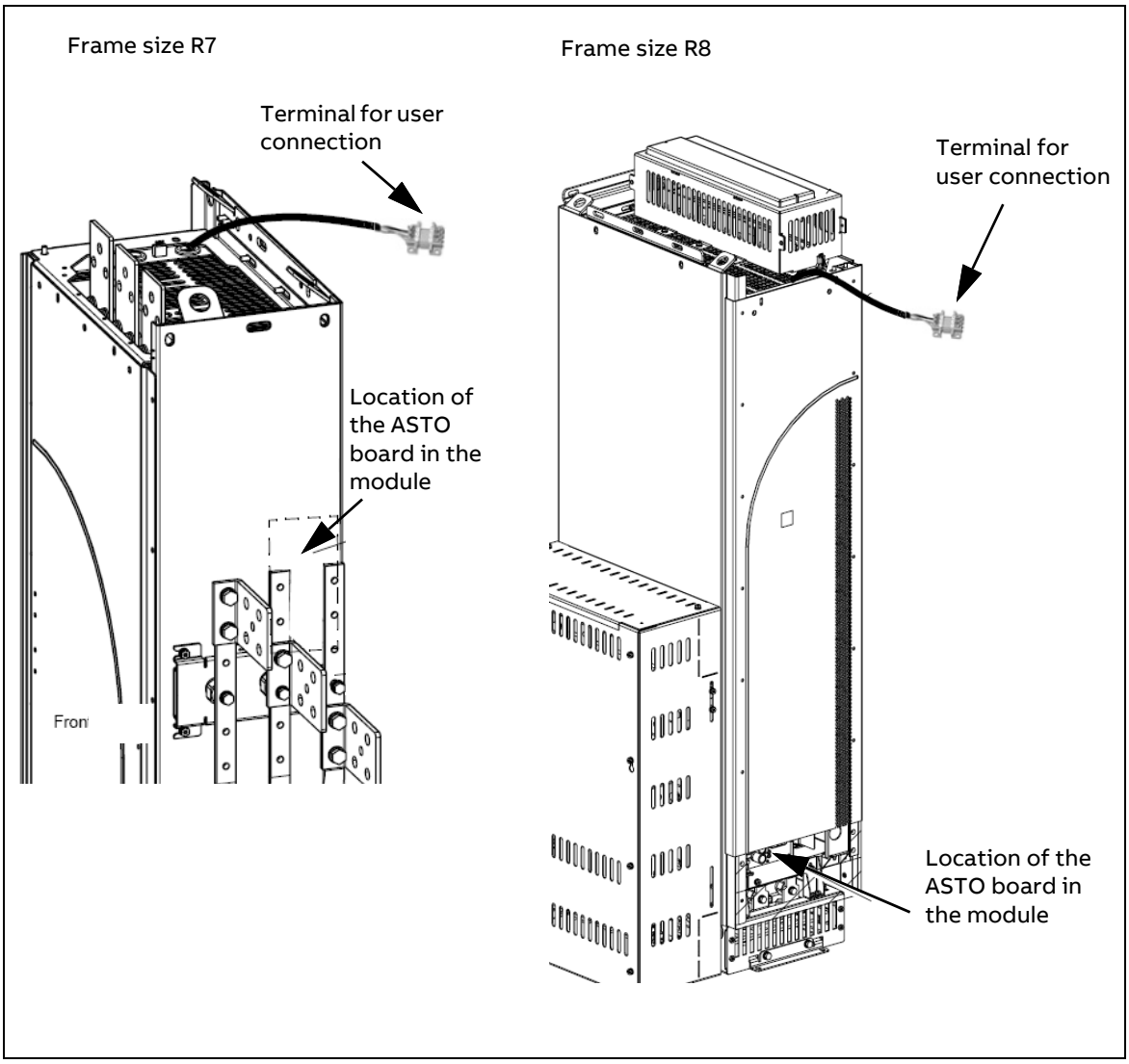

Selecting the power cables

Dimension the mains (input power) and motor cables according to the local regulations:

- The cable must be able to carry the drive load current. See *Technical data* (page 99) for the rated currents.
- The cable must be rated for at least 70 °C (158 °F) maximum permissible temperature of conductor in continuous use. For US, see *Additional US requirements* (page 56).
- The inductance and impedance of the PE conductor/cable (grounding wire) must be rated according to permissible touch voltage appearing under fault conditions (so that the fault point voltage will not rise excessively if a ground fault occurs).
- 600 V AC cable is accepted for up to 500 V AC. 750 V AC cable is accepted for up to 600 V AC. For 690 V AC rated equipment, the rated voltage between the conductors of the cable should be at least 1 kV.

For drive frame size R5 and larger, or motors larger than 30 kW (40 hp), symmetrical shielded motor cable must be used. A four-conductor system can be used up to frame size R4 with up to 30 kW (40 hp) motors, but shielded symmetrical motor cable is always recommended. The shield(s) of motor cable(s) must have 360° bonding at both ends.

Note: When a continuous metal conduit is used, shielded cable is not required. The conduit must have bonding at both ends as with cable shield.

A four-conductor system is allowed for input cabling, but shielded symmetrical cable is recommended. To operate as a protective conductor, the shield conductivity must be as follows when the protective conductor is made of the same metal as the phase conductors:

Cross-sectional area of the phase conductors **S (mm^2)**	**Minimum cross-sectional area of the corresponding protective conductor** **S_p (mm^2)**
$S \leq 16$	S
$16 < S \leq 35$	16
$35 < S$	S/2

Compared to a four-conductor system, the use of symmetrical shielded cable reduces electromagnetic emission of the whole drive system as well as the stress on motor insulation, bearing currents and wear.

The motor cable and its PE pigtail (twisted shield) should be kept as short as possible in order to reduce high-frequency electromagnetic emission, as well as stray currents outside the cable and capacitive current (relevant in power range below 20 kW).

Longer cables cause a motor voltage decrease which limits the available motor power. The decrease depends on the motor cable length and characteristics. Contact ABB for more information. Note that a sine filter (optional) at the drive output also causes a voltage decrease.

Alternative power cable types

Power cable types that can be used with the drive are represented below.

Recommended

Symmetrical shielded cable: three phase conductors and a concentric or otherwise symmetrically constructed PE conductor, and a shield

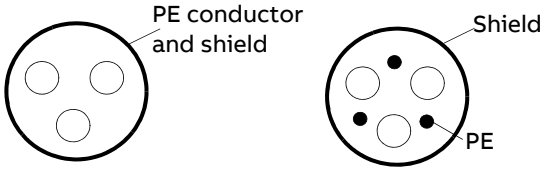

A separate PE conductor is required if the conductivity of the cable shield is < 50% of the conductivity of the phase conductor.

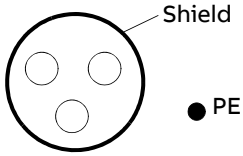

A four-conductor system: three phase conductors and a protective conductor

Not allowed for motor cables

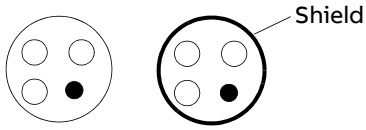

Not allowed for motor cables with phase conductor cross section larger than 10 mm^2 [motors > 30 kW (40 hp)].

The following power cable type is not allowed.

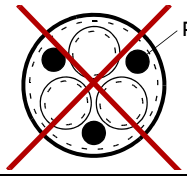

Symmetrical shielded cable with individual shields for each phase conductor is not allowed on any cable size for input and motor cabling.

Motor cable shield

To effectively suppress radiated and conducted radio-frequency emissions, the shield conductivity must be at least 1/10 of the phase conductor conductivity. The requirements are easily met with a copper or aluminum shield. The minimum requirement of the motor cable shield of the drive is shown below. It consists of a concentric layer of copper wires with an open helix of copper tape or copper wire. The better and tighter the shield, the lower the emission level and bearing currents.

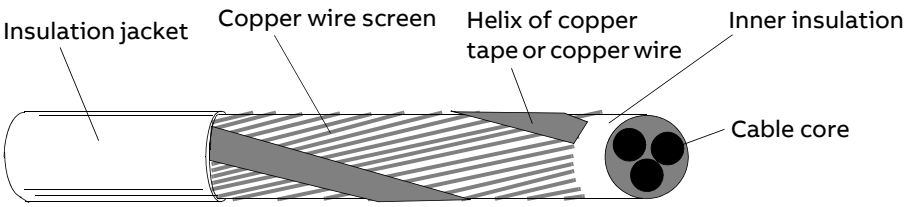

Additional US requirements

Type MC continuous corrugated aluminum armor cable with symmetrical grounds or shielded power cable must be used for the motor cables if metallic conduit is not used. For the North American market, 600 V AC cable is accepted for up to 500 V AC. 1000 V AC cable is required above 500 V AC (below 600 V AC). For drives rated over 100 A, the power cables must be rated for 75 °C (167 °F).

Conduit

Separate parts of a conduit must be coupled together, bridge the joints with a ground conductor bonded to the conduit on each side of the joint. Bond the conduits also to the drive enclosure and motor frame. Use separate conduits for input power, motor, brake resistor, and control wiring. When conduit is employed, type MC continuous corrugated aluminum armor cable or shielded cable is not required. A dedicated ground cable is always required.

WARNING! Do not run motor wiring from more than one drive in the same conduit.

Armored cable / shielded power cable

Six conductor (3 phases and 3 ground) type MC continuous corrugated aluminum armor cable with symmetrical grounds is available from the following suppliers (trade names in parentheses):

- Anixter Wire & Cable (Philsheath)
- BICC General Corp (Philsheath)
- Rockbestos Co. (Gardex)
- Oaknite (CLX)

Shielded power cables are available from Belden, LAPPKABEL (ÖLFLEX) and Pirelli.

Power factor compensation capacitors

Power factor compensation is not needed with AC drives. However, if a drive is to be connected in a system with compensation capacitors installed, note the following restrictions.

WARNING! Do not connect power factor compensation capacitors or harmonic filters to the motor cables (between the drive and the motor). They are not meant to be used with AC drives and can cause permanent damage to the drive or themselves.

If there are power factor compensation capacitors in parallel with the three phase input of the drive:

1. Do not connect a high-power capacitor to the power line while the drive is connected. The connection will cause voltage transients that may trip or even damage the drive.
2. If capacitor load is increased/decreased step by step when the AC drive is connected to the power line: Ensure that the connection steps are low enough not to cause voltage transients that would trip the drive.
3. Check that the power factor compensation unit is suitable for use in systems with AC drives i.e. harmonic generating loads. In such systems, the compensation unit should typically be equipped with a blocking reactor or harmonic filter.

Equipment connected to the motor cable

Installation of safety switches, contactors, connection boxes, etc.

To minimize the emission level when safety switches, contactors, connection boxes or similar equipment are installed in the motor cable between the drive and the motor:

- EU: Install the equipment in a metal enclosure with 360-degree grounding for the shields of both the incoming and outgoing cable, or connect the shields of the cables otherwise together.
- US: Install the equipment in a metal enclosure in a way that the conduit or motor cable shielding runs consistently without breaks from the drive to the motor.

Bypass connection

WARNING! Never connect the supply power to the drive output terminals U2, V2 and W2. Mains (line) voltage applied to the output can result in permanent damage to the unit. If bypassing is required, use mechanically or electrically interlocked contactors between the motor and the drive and between the motor and the power line. Make sure with interlocking that the contactors cannot be closed simultaneously. The installation must be clearly marked as defined in IEC/EN 61800-5-1, subclause 6.5.3, for example, “THIS MACHINE STARTS AUTOMATICALLY”.

Using a contactor between the drive and the motor

Implementing the control of the output contactor depends on how you select the drive to operate.

When you have selected to use DTC motor control mode, and motor ramp stop, open the contactor as follows:

1. Give a stop command to the drive.
2. Wait until the drive decelerates the motor to zero speed.
3. Open the contactor.

When you have selected to use DTC motor control mode, and motor coast stop, or scalar control mode, open the contactor as follows:

1. Give a stop command to the drive.
2. Open the contactor.

WARNING! When the DTC motor control mode is in use, never open the output contactor while the drive controls the motor. The DTC motor control operates extremely fast, much faster than it takes for the contactor to open its contacts. When the contactor starts opening while the drive controls the motor, the DTC control will try to maintain the load current by immediately increasing the drive output voltage to the maximum. This will damage, or even burn the contactor completely.

Protecting the relay output contacts and attenuating disturbances in case of inductive loads

Inductive loads (relays, contactors, motors) cause voltage transients when switched off.

The relay contacts on the RMIO board are protected with varistors (250 V) against overvoltage peaks. In spite of this, it is highly recommended to equip inductive loads with noise attenuating circuits [varistors, RC filters (AC) or diodes (DC)] in order to minimize the EMC emission at switch-off. If not suppressed, the disturbances may connect capacitively or inductively to other conductors in the control cable and form a risk of malfunction in other parts of the system.

Install the protective component as close to the inductive load as possible. Do not install protective components at the RMIO board terminal block.

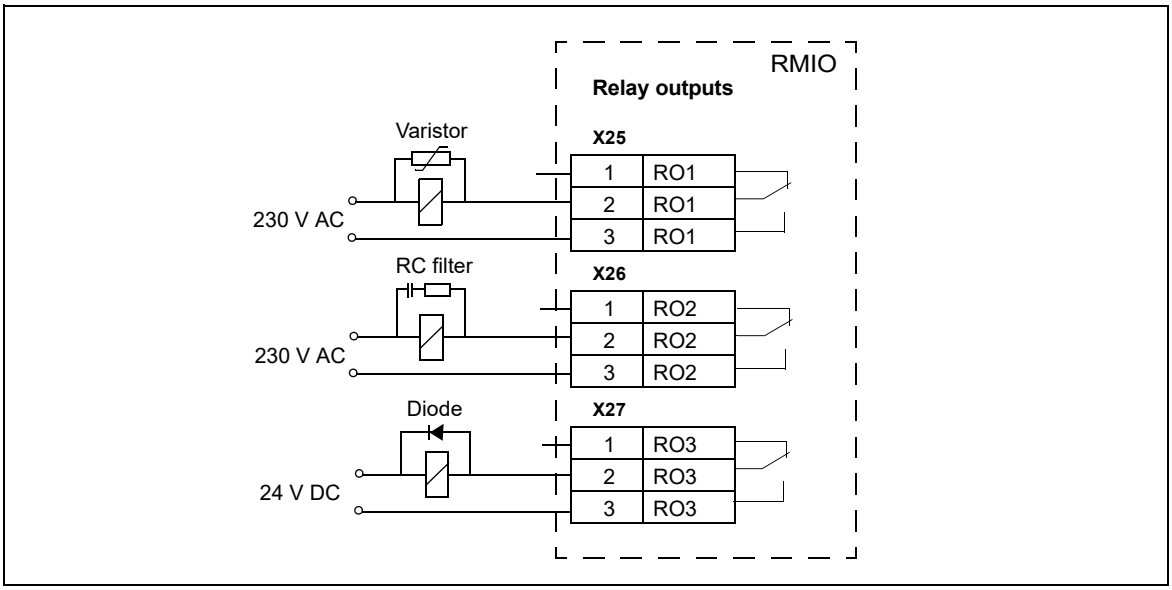

Selecting the control cables

All control cables must be shielded.

Use a double-shielded twisted-pair cable (Figure a) for analogue signals. This type of cable is recommended for the pulse encoder signals also. Employ one individually shielded pair for each signal. Do not use common return for different analogue signals.

A double-shielded twisted-pair cable is the best alternative for low-voltage digital signals but single-shielded twisted pair cable (Figure b) is also usable.

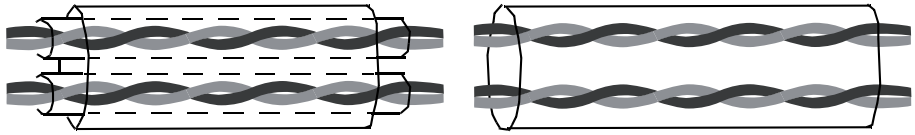

a
A double-shielded twisted-pair cable

b
A single-shielded twisted-pair cable

Run analogue and digital signals in separate, shielded cables.

Relay-controlled signals, providing their voltage does not exceed 48 V, can be run in the same cables as digital input signals. It is recommended that the relay-controlled signals be run as twisted pairs.

Never mix 24 V DC and 115/230 V AC signals in the same cable.

Relay cable

The cable type with braided metallic screen (for example, ÖLFLEX by LAPPKABEL, Germany) has been tested and approved by ABB.

Control panel cable

In remote use, the cable connecting the control panel to the drive must not exceed 3 m (10 ft). The cable type tested and approved by ABB is used in control panel option kits.

Connection of a motor temperature sensor to the drive I/O

WARNING! IEC 61800-5-1 requires double or reinforced insulation between live parts when:
• the accessible parts are non-conductive, or

•the accessible parts are conductive, but not connected to the protective earth.

Obey this requirement when you plan the connection of a motor temperature sensor to the drive.

You have these implementation alternatives:

1. If there is double or reinforced insulation between the sensor and the live parts of the motor: You can connect the sensor directly to the analog/digital inputs of the drive. Make sure that the voltage is not more than the maximum allowed voltage over the sensor.
2. If there is basic insulation between the sensor and the live parts of the motor, or if the insulation type is not known: You can connect the sensor to the drive through an option module. The sensor and the module must form a double or reinforced insulation between the motor live parts and the drive control unit. Make sure that the voltage does not exceed the maximum allowed voltage over the sensor.
3. If there is basic insulation between the sensor and the live parts of the motor, or if the insulation type is not known: You can connect a sensor to a digital input of the drive via an external relay. The sensor and the relay must form a double or reinforced insulation between the live parts of the motor and the digital input of the drive. Make sure that the voltage does not exceed the maximum allowed voltage over the sensor.

Installation sites above 2000 metres (6562 feet)

WARNING! Protect against direct contact when installing, operating and servicing the RMIO board wiring and option modules attached to the board. The Protective Extra Low Voltage (PELV) requirements stated in EN 50178 are not fulfilled at altitudes above 2000 m (6562 ft).

Routing the cables

Route the motor cable away from other cable routes. Motor cables of several drives can be run in parallel installed next to each other. It is recommended that the motor cable, input power cable and control cables be installed on separate trays. Avoid long parallel runs of motor cables with other cables in order to decrease electromagnetic interference caused by the rapid changes in the drive output voltage.

Where control cables must cross power cables make sure they are arranged at an angle as near to 90 degrees as possible. Do not run extra cables through the drive.

The cable trays must have good electrical bonding to each other and to the grounding electrodes. Aluminum tray systems can be used to improve local equalizing of potential.

A diagram of the cable routing:

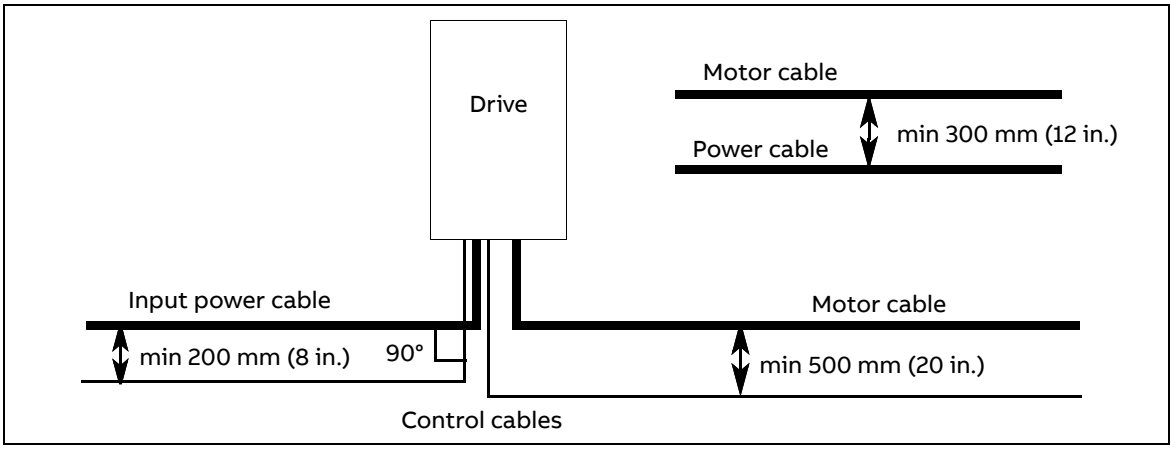

Control cable ducts

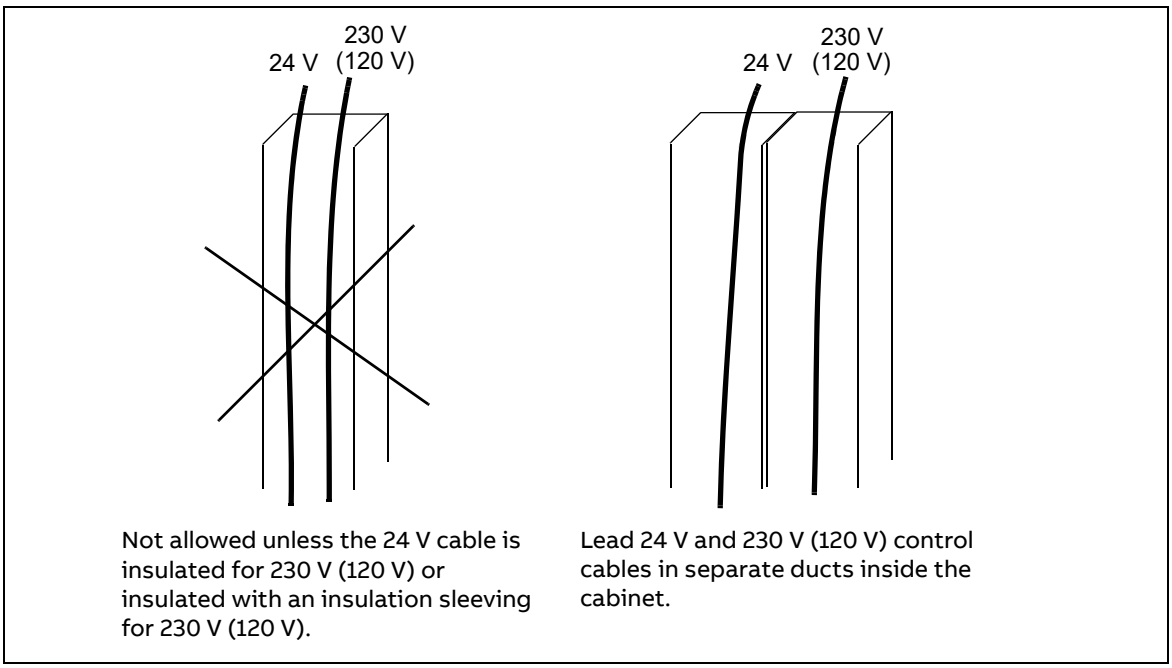

6

Electrical installation

What this chapter contains

This chapter instructs in the cabling of the drive.

WARNING! The work described in this chapter may only be carried out by a qualified electrician. Obey the *Safety instructions* (page 11) in this manual. Ignoring the safety instructions can cause injury or death.

Make sure that the drive is disconnected from the input power during installation. If the drive was connected to the input power, wait for 5 min after you disconnect the input power.

Checking the insulation of the assembly

Drive

Do not make any voltage tolerance or insulation resistance tests on any part of the drive as testing can damage the drive. Every drive was tested for insulation between the main circuit and the chassis at the factory. There are voltage-limiting circuits inside the drive which cut down the testing voltage automatically.

Supply cable

Check the insulation of the supply (input) cable according to local regulations before you connect it to the drive.

Motor and motor cable

Check the insulation of the motor and motor cable as follows:

1. Check that the motor cable is connected to the motor, and disconnected from the drive output terminals U2, V2 and W2.
2. Measure the insulation resistance between each phase conductor and the Protective Earth conductor using a measuring voltage of 1000 V DC. The insulation resistance of an ABB motor must exceed 100 Mohm (reference value at 25 °C or 77 °F). For the insulation resistance of other motors, please consult the manufacturer's instructions.
   Note: Moisture in the motor casing reduces the insulation resistance. If moisture is suspected, dry the motor and repeat the measurement.

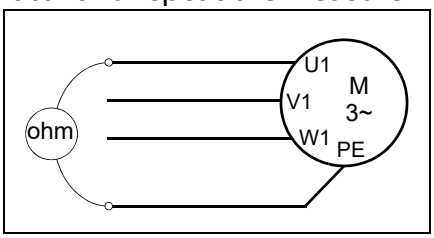

IT (ungrounded) systems

A drive with no EMC filter or with EMC filter +E210 is suitable for IT (ungrounded systems).

Note: You cannot disconnect an EMC filter from the drive.

WARNING! If a drive with EMC filter selection +E202 or +E200 is installed on an IT system [an ungrounded power system or a high resistance-grounded (over 30 ohms) power system], the system is connected to the earth potential through the EMC filter capacitors of the drive. This can cause danger or damage the unit.

Installation of optional EMC filter (+E202)

See *ARFI-10 EMC Filter Installation Guide* [3AFE68317941 (English)].

Example wiring diagram

The diagram presents an example for the main wiring. The diagram includes optional components which are not part of a basic delivery (marked *) and equipment not available as plus code options (marked **).

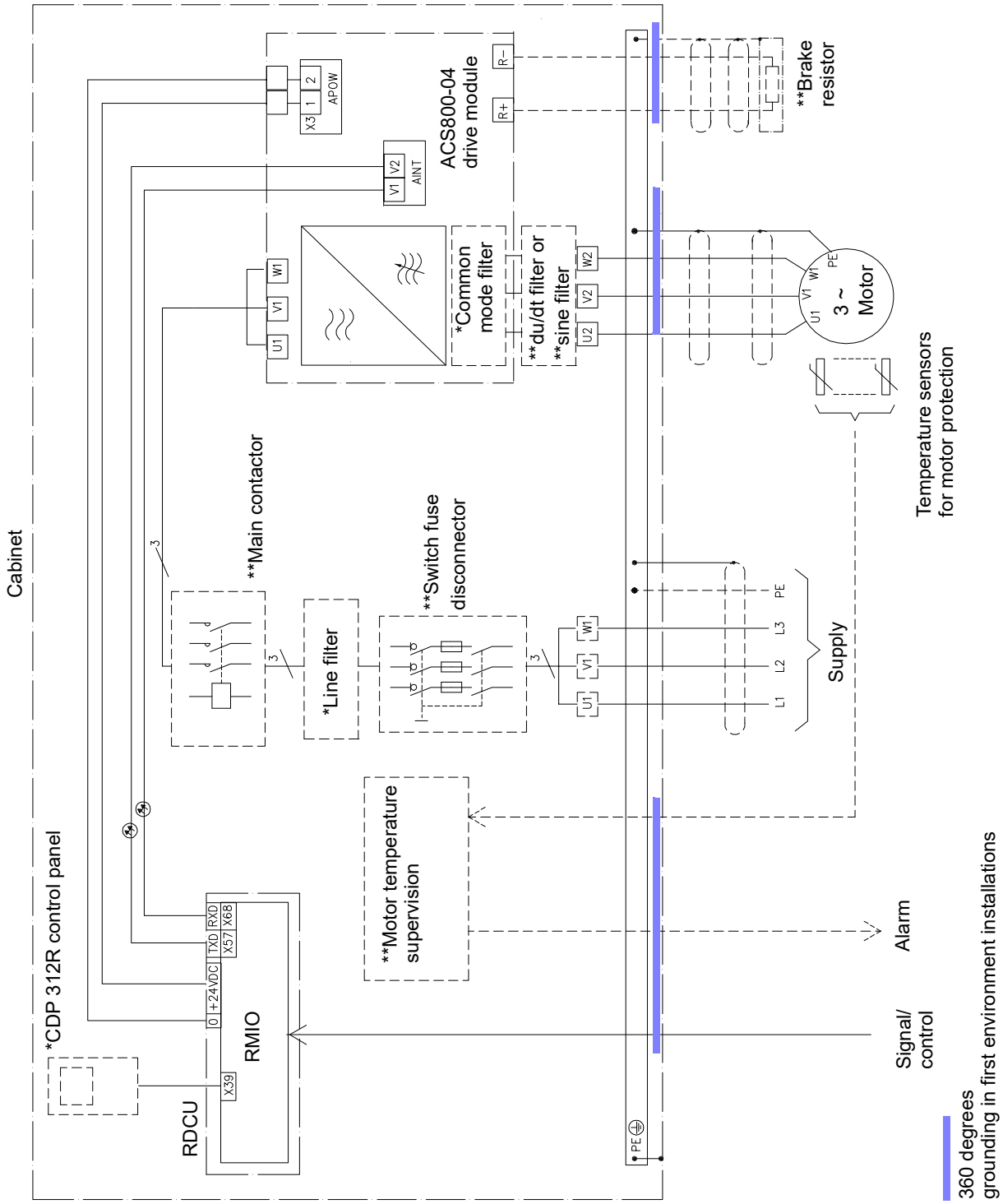

Power cable connection diagram

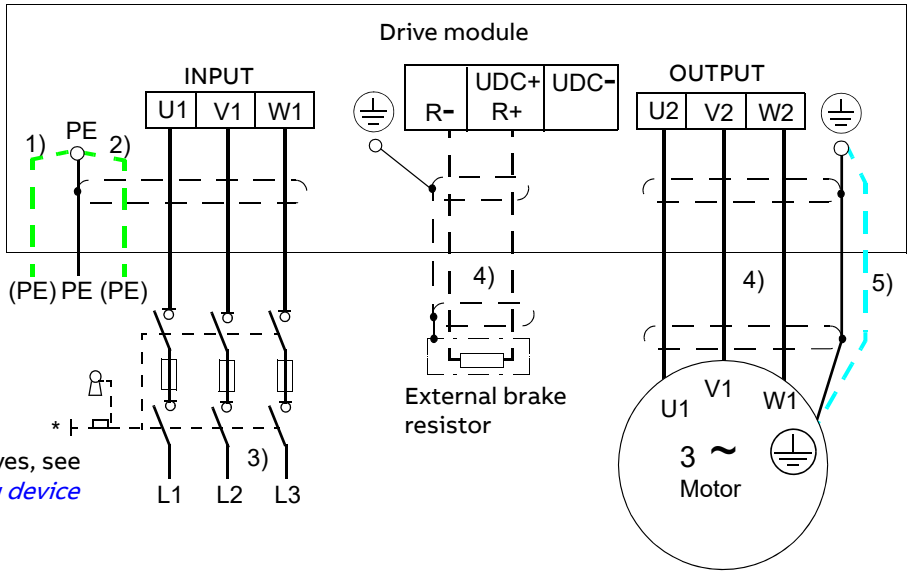

* For alternatives, see *Disconnecting device* (page 45).

1), 2)

If shielded cable is used (not required but recommended) and the conductivity of the shield is < 50% of the conductivity of the phase conductor, use a separate PE cable (1) or a cable with a grounding conductor (2).

Ground the other end of the input cable shield or PE conductor at the distribution board.

3) 360-degree grounding recommended at the cabinet entry if shielded cable

4) 360-degree grounding required at the cabinet entry in first environment installations **

5) Use a separate grounding cable if the conductivity of the cable shield is < 50% of the conductivity of the phase conductor and there is no symmetrically constructed grounding conductor in the cable (see *Selecting the power cables* on page 54).

Note:

If there is a symmetrically constructed grounding conductor in the motor cable in addition to the conductive shield, connect the grounding conductor to the grounding terminal at the drive and motor ends.

Do not use an asymmetrically constructed motor cable. Connecting its fourth conductor at the motor end increases bearing currents and causes extra wear.

Grounding of the motor cable shield at the cabinet entry

Ground the cable shield 360 degrees at the lead-through of the cabinet.

Grounding of the motor cable shield at the motor end

For minimum radio frequency interference:

- ground the cable shield 360 degrees at the lead-through of the motor terminal box

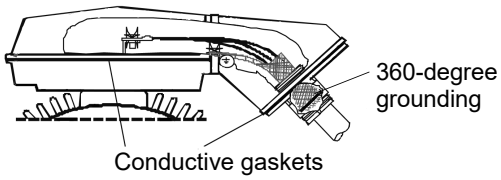

- or ground the cable by twisting the shield as follows: flattened width ≥ 1/5 · length.

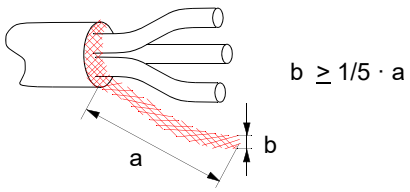

** First environment EMC compliance is defined in *Compliance with EN 61800-3:2004* (page 125).

Grounding of the cable shields

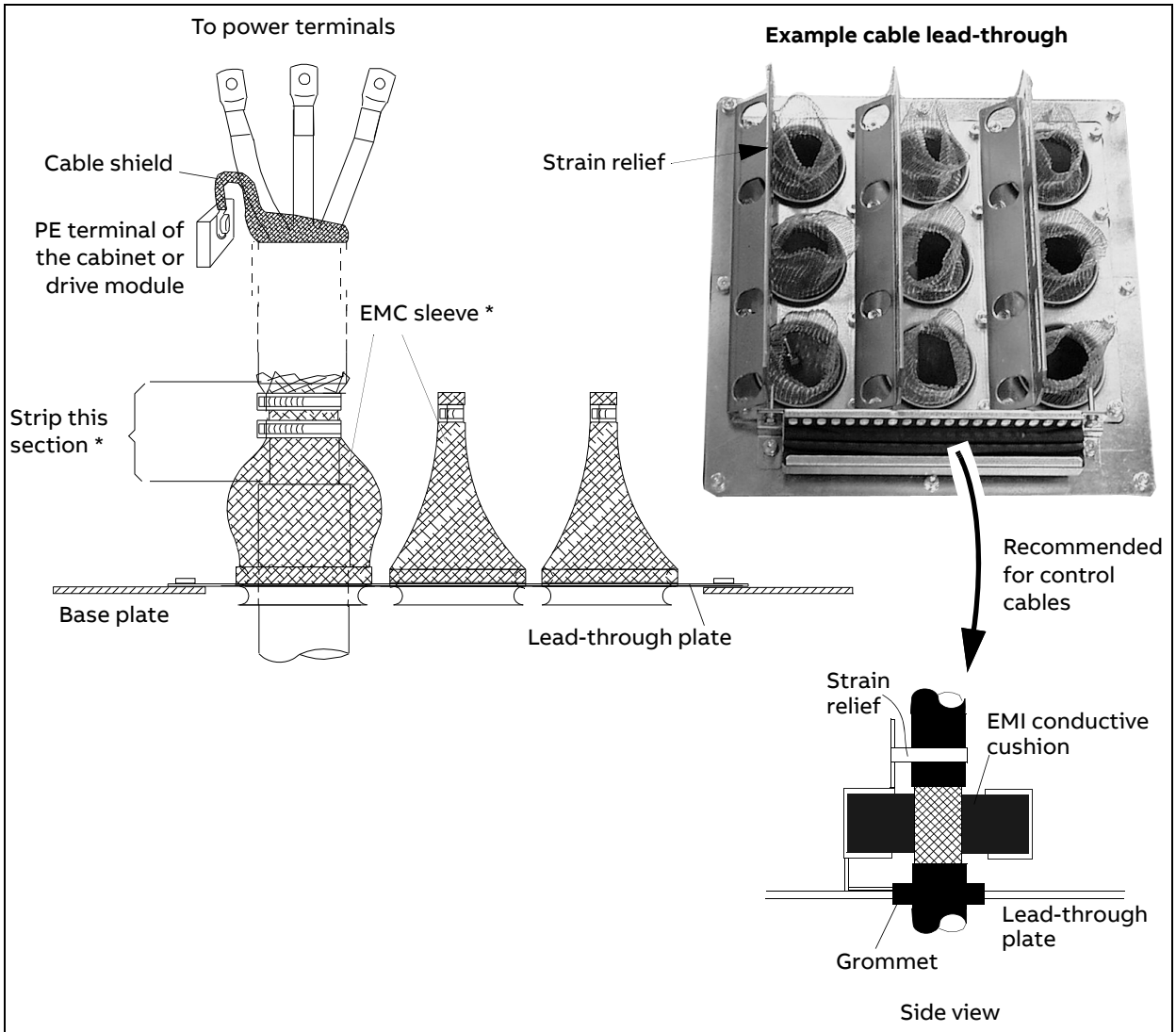

* required for motor cables in first environment installations. First environment EMC compliance is defined in *Compliance with EN 61800-3:2004* (page 125).

Fastening US cable lugs

Example mounting

US cable lugs can be connected directly to the output busbars or to the terminals as follows.

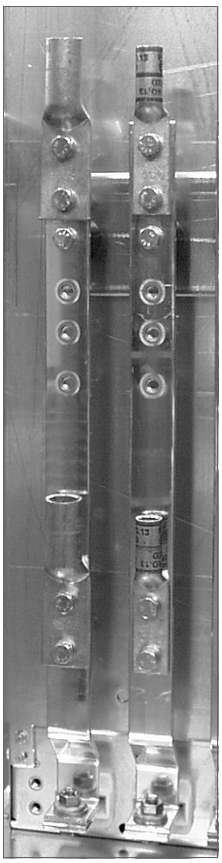

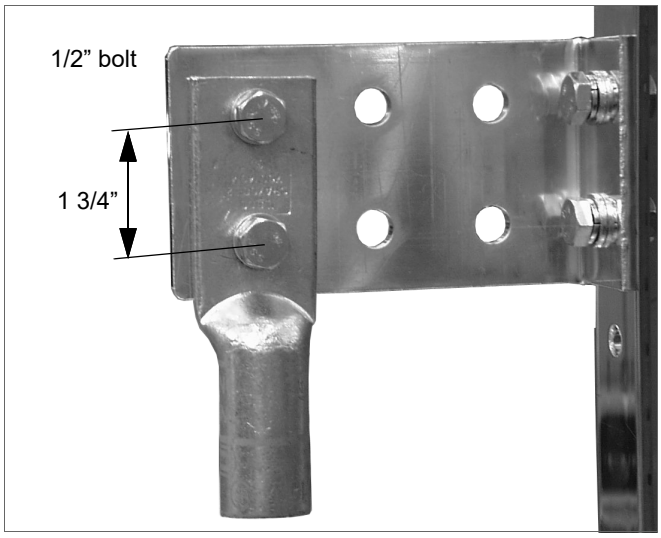

Connections of the RDCU

The RDCU control unit contains the RMIO board for the control cables.

WARNING! Handle the fiber-optic cables with care. When you disconnect optic cables, always hold the connector. Do not touch the ends of the fibers with bare hands as the fiber is sensitive to dirt.

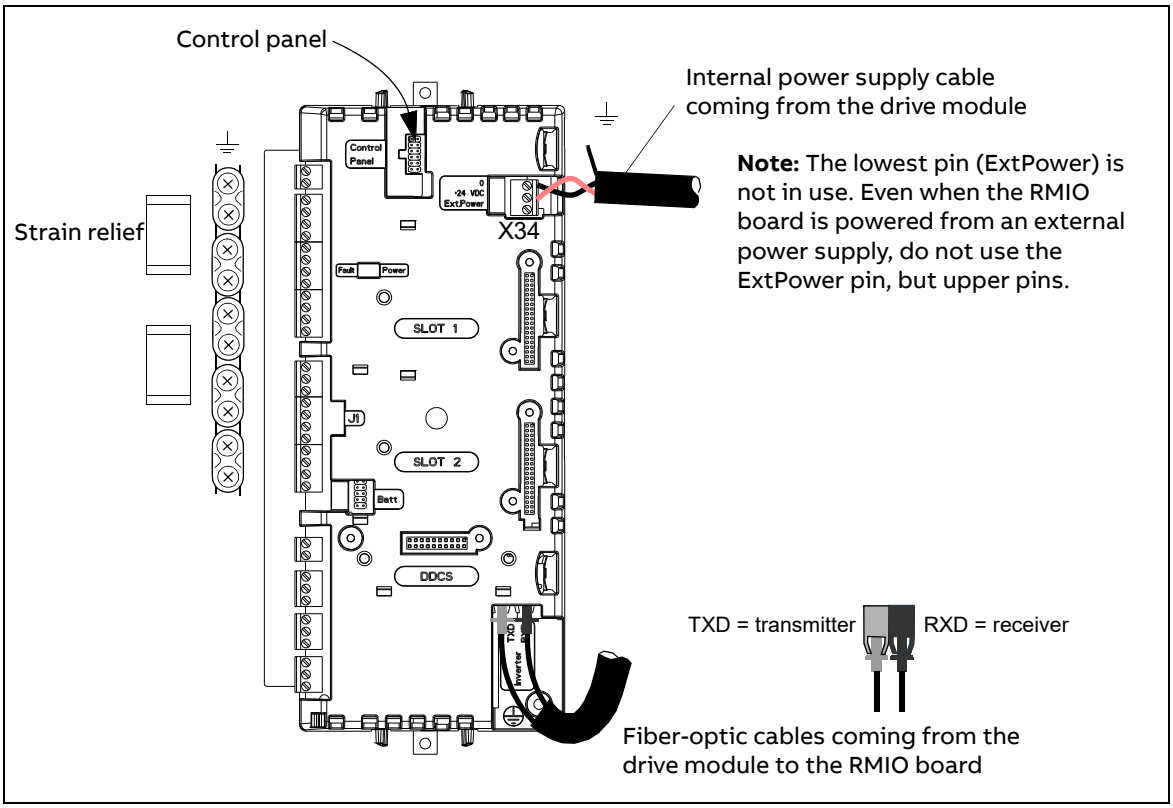

Connecting the control cables to the RMIO board

Connect the control cables as described below. Connect the conductors to the appropriate detachable terminals of the RMIO board (refer to *Motor control and I/O board (RMIO)* on page 75). Tighten the screws to secure the connection. Make 360-degree EMC grounding at the cabinet entry in first environment installations. First environment EMC compliance is defined in *Compliance with EN 61800-3:2004* (page 125).

Connecting the shield wires at the RMIO board

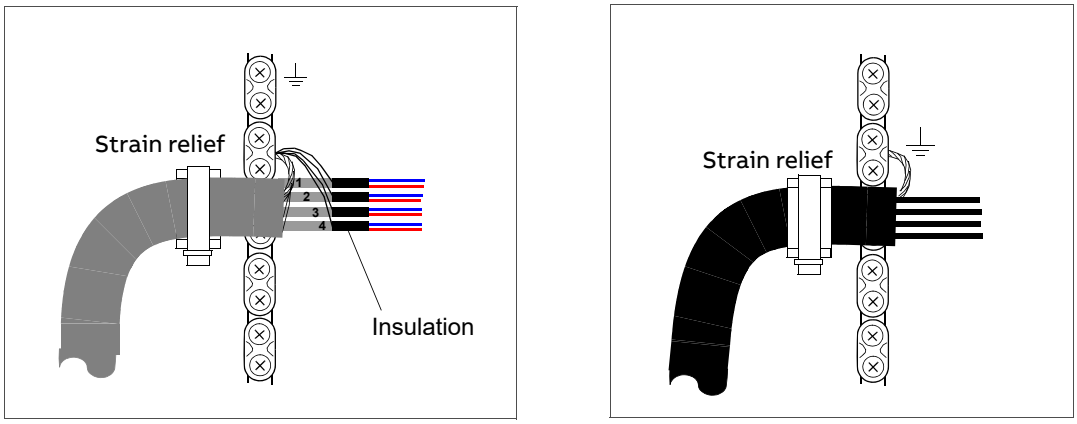

Double-shielded cable *Single-shielded cable*

Single-shielded cable: Twist the grounding wires of the outer shield and connect them to the nearest grounding clamp.

Double-shielded cable: Connect the inner shields and the grounding wires of the outer shield to the nearest grounding clamp.

Do not connect shields of different cables to the same grounding clamp.

Leave the other end of the shield unconnected or ground it indirectly via a few nanofarads high-frequency capacitor (for example, 3.3 nF / 630 V). The shield can also be grounded directly at both ends if they are *in the same ground line* with no significant voltage drop between the end points.

Keep the signal wire pairs twisted as close to the terminals as possible. Twisting the wire with its return wire reduces disturbances caused by inductive coupling.

Securing the control cables mechanically

Use strain relief clamps as shown above. Fasten the control cables to the cabinet frame.

Settings of the cooling fan transformer

The voltage transformer of the cooling fan is located at the top right-hand corner of the drive module. Remove the front cover for adjusting the settings and replace the cover after setting.

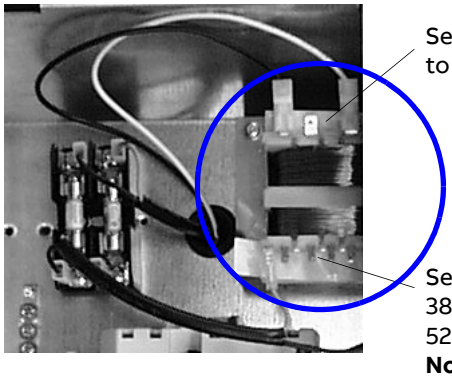

Set to 220 V if the supply frequency is 60 Hz. Set to 230 V if the supply frequency is 50 Hz.

Set according to the supply voltage:
380 V, 400 V, 415 V, 440 V, 480 V or 500 V; or
525 V, 575 V, 600 V, 660 V or 690 V.
Note: No need to set for 230 V units.

Installation of optional modules

The optional module (such as a fieldbus adapter, an I/O extension module and the pulse encoder interface) is inserted in the optional module slot of the RMIO board in the RDCU control unit and fixed with two screws. See the appropriate optional module manual for the cable connections.

Cabling of I/O and fieldbus modules

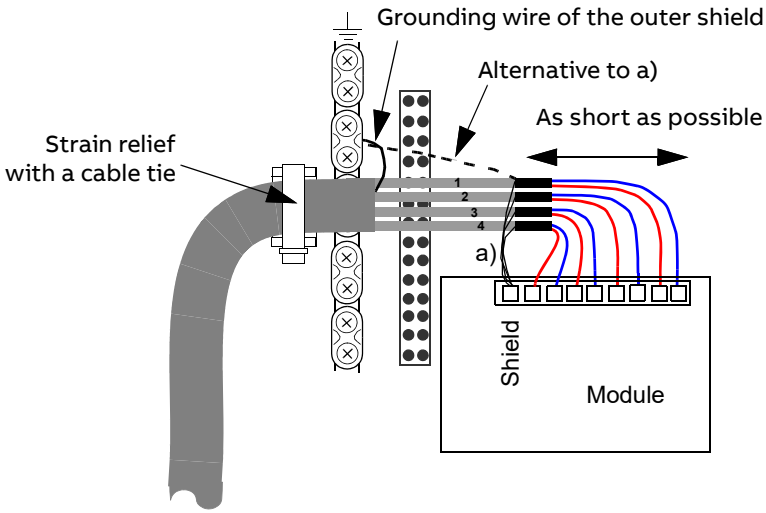

Pulse encoder module cabling

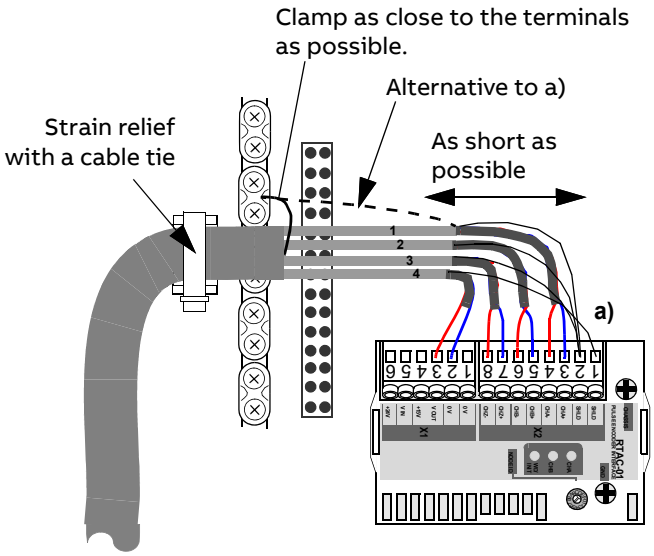

Note1: If the encoder is of unisolated type, ground the encoder cable at the drive end only. If the encoder is galvanically isolated from the motor shaft and the stator frame, ground the encoder cable shield at the drive and the encoder end.

Note 2: Twist the pair cable wires.

Note 3: The grounding wire of the outer shield of the cable can alternatively be connected to the SHLD terminal of the RTAC module.

Fiber-optic link

A DDCS fiber-optic link is provided via the RDCO option module for PC tools, master/follower link and the AIMA-01 I/O module adapter. See *RDCO-01/02/03/04 DDCS communication option modules* (page 141) for the connections. Observe color codes when you install fiber-optic cables. Blue connectors go to blue terminals, and gray connectors to gray terminals.

When installing multiple modules on the same channel, connect them in a ring.

Warning sticker

There are warning stickers in different languages inside the packing box of the drive. Attach a warning sticker in the local language onto the cover of the drive module.

Removing the protective covering from the drive module air outlet

WARNING! Remove the protective covering from the top of the drive module after the installation. If the covering is not removed, the cooling air cannot flow freely through the module and the drive can get too hot.

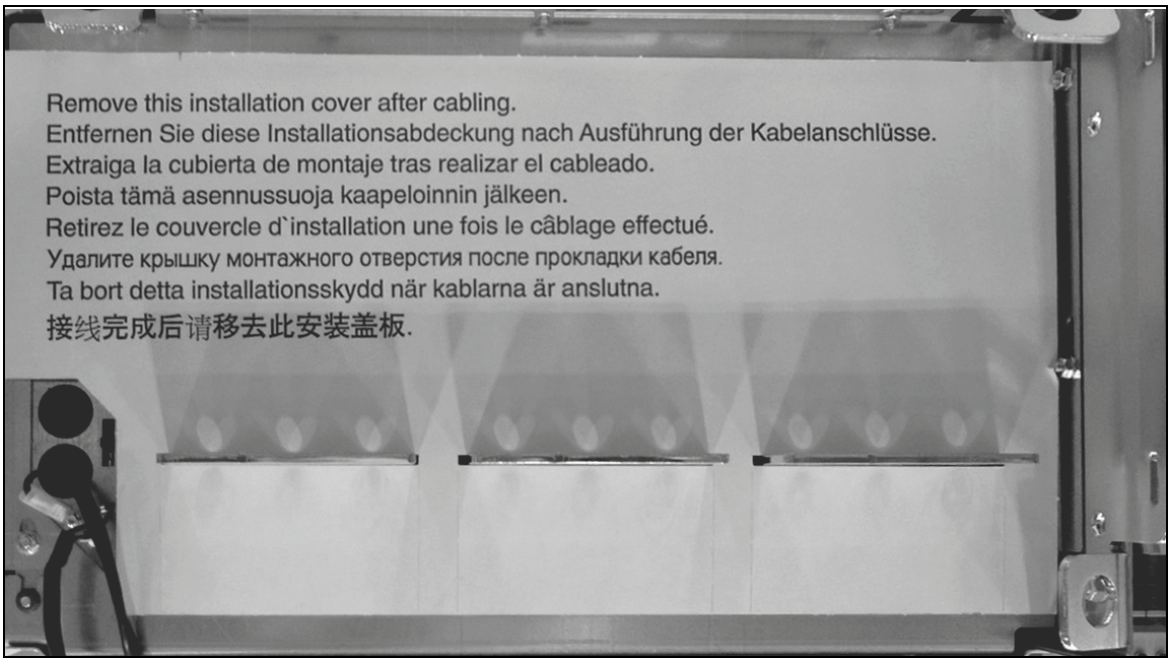

7

Motor control and I/O board (RMIO)

What this chapter contains

This chapter shows the

- External control connections to the RMIO board for the ACS800 Standard Control Program (Factory Macro).
- Specifications of the inputs and outputs of the board.

Note on terminal labelling

Optional modules (Rxxx) may have identical terminal designations with the RMIO board.

Note on external power supply

An external +24 V DC power supply for the RMIO board is recommended if

- the application requires a fast start after connecting the input power supply
- fieldbus communication is required when the input power supply is disconnected.

The RMIO board can be supplied from an external power source from terminal X23 or X34 or both X23 and X34. The internal power supply to terminal X34 can be left connected when using terminal X23.

WARNING! If the RMIO board is supplied from an external power source from terminal X34, the loose end of the cable removed from the RMIO board terminal must be secured mechanically to a location where it cannot come into contact with electrical parts. If the screw terminal plug of the cable is removed, the wire ends must be individually insulated.

Parameter settings

In Standard Control Program, set parameter 16.9 CTRL BOARD SUPPLY to EXTERNAL 24V if the RMIO board is powered from an external supply.

External control connections (non-US)

External control cable connections to the RMIO board for the ACS800 Standard Control Program (Factory Macro) are shown below. For external control connections of other control macros and programs, see the appropriate firmware manual.

RMIO

Terminal block size:

cables 0.3 to 2.5 mm^2 (22 to 14 AWG)

Tightening torque:

0.2 to 0.4 Nm

(0.2 to 0.3 lbf ft)

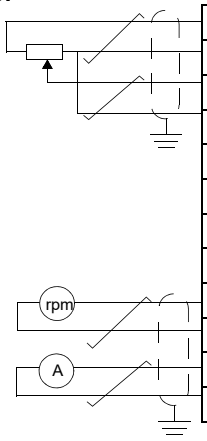

X2*	RMIO		
X20	X20		
1	1	VREF-	Reference voltage -10 VDC, 1 kohm ≤ R_L ≤ 10 kohm
2	2	AGND	
X21	X21		
1	1	VREF+	Reference voltage 10 VDC, 1 kohm ≤ R_L ≤ 10 kohm
2	2	AGND	
3	3	AI1+	Speed reference 0(2) ... 10 V, R_{in} = 200 kohm
4	4	AI1-	
5	5	AI2+	By default, not in use. 0(4) ... 20 mA, R_{in} = 100 ohm
6	6	AI2-	
7	7	AI3+	By default, not in use. 0(4) ... 20 mA, R_{in} = 100 ohm
8	8	AI3-	
9	9	AO1+	Motor speed 0(4)...20 mA ≙ 0...motor nom. speed, R_L ≤ 700 ohm
10	10	AO1-	
11	11	AO2+	Output current 0(4)...20 mA ≙ 0...motor nom. current, R_L ≤ 700 ohm
12	12	AO2-	
X22	X22		
1	1	DI1	Stop/Start
2	2	DI2	Forward/Reverse [1]
3	3	DI3	Not in use
4	4	DI4	Acceleration & deceleration select [2]
5	5	DI5	Constant speed select [3]
6	6	DI6	Constant speed select [3]
7	7	+24VD	+24 V DC max. 100 mA
8	8	+24VD	
9	9	DGND1	Digital ground
10	10	DGND2	Digital ground
11	11	DIIL	Start interlock (0 = stop) [4]
X23	X23		
1	1	+24V	Auxiliary voltage output and input, non-isolated, 24 V DC 250 mA [5]
2	2	GND	
X25	X25		
1	1	RO1	Relay output 1: ready
2	2	RO1	
3	3	RO1	
X26	X26		
1	1	RO2	Relay output 2: running
2	2	RO2	
3	3	RO2	
X27	X27		
1	1	RO3	Relay output 3: fault (-1)
2	2	RO3	
3	3	RO3	

Fault

* optional terminal block in ACS800-02 and ACS800-07

[1] Only effective if par. 10.03 is set to REQUEST by the user.

[2] 0 = open, 1 = closed

DI4	Ramp times according to
0	parameters 22.02 and 22.03
1	parameters 22.04 and 22.05

[3] See par. group 12 CONSTANT SPEEDS.

DI5	DI6	Operation
0	0	Set speed through AI1
1	0	Constant speed 1
0	1	Constant speed 2
1	1	Constant speed 3

[4] See parameter 21.09 START INTRL FUNC.

[5] Total maximum current shared between this output and optional modules installed on the board.

External control connections (US)

External control cable connections to the RMIO board for the ACS800 Standard Control Program (Factory Macro US version) are shown below. For external control connections of other control macros and programs, see the appropriate firmware manual.

RMIO

Terminal block size:

cables 0.3 to 2.5 mm^2 (22 to 14 AWG)

Tightening torque:

0.2 to 0.4 Nm (0.2 to 0.3 lbf ft)

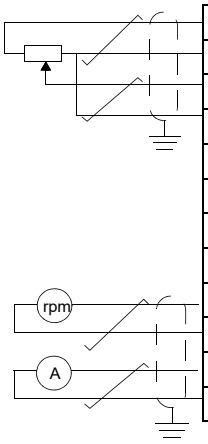

X2*	RMIO		
X20	X20		
1	1	VREF-	Reference voltage -10 VDC, 1 kohm ≤ R_L ≤ 10 kohm
2	2	AGND	
X21	X21		
1	1	VREF+	Reference voltage 10 VDC, 1 kohm ≤ R_L ≤ 10 kohm
2	2	AGND	
3	3	AI1+	Speed reference 0(2) ... 10 V, R_{in} = 200 kohm
4	4	AI1-	
5	5	AI2+	By default, not in use. 0(4) ... 20 mA, R_{in} = 100 ohm
6	6	AI2-	
7	7	AI3+	By default, not in use. 0(4) ... 20 mA, R_{in} = 100 ohm
8	8	AI3-	
9	9	AO1+	Motor speed 0(4)...20 mA ≙ 0...motor nom. speed, R_L ≤ 700 ohm
10	10	AO1-	
11	11	AO2+	Output current 0(4)...20 mA ≙ 0...motor nom. current, R_L ≤ 700 ohm
12	12	AO2-	
X22	X22		
1	1	DI1	Start (⎍)
2	2	DI2	Stop (⎌)
3	3	DI3	Forward/Reverse [1]
4	4	DI4	Acceleration & deceleration select [2]
5	5	DI5	Constant speed select [3]
6	6	DI6	Constant speed select [3]
7	7	+24VD	+24 VDC max. 100 mA
8	8	+24VD	
9	9	DGND1	Digital ground
10	10	DGND2	Digital ground
11	11	DIIL	Start interlock (0 = stop) [4]
X23	X23		
1	1	+24V	Auxiliary voltage output and input, non-isolated, 24 VDC 250 mA [5]
2	2	GND	
X25	X25		
1	1	RO1	Relay output 1: ready
2	2	RO1	
3	3	RO1	
X26	X26		
1	1	RO2	Relay output 2: running
2	2	RO2	
3	3	RO2	
X27	X27		
1	1	RO3	Relay output 3: fault (-1)
2	2	RO3	
3	3	RO3	

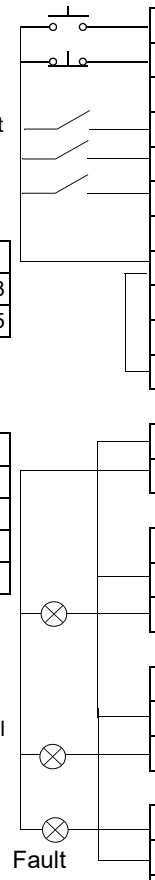

* optional terminal block in ACS800-U2 and ACS800-U7

[1] Only effective if par. 10.03 is set to REQUEST by the user.

[2] 0 = open, 1 = closed

DI4	Ramp times according to
0	parameters 22.02 and 22.03
1	parameters 22.04 and 22.05

[3] See par. group 12 CONSTANT SPEEDS.

DI5	DI6	Operation
0	0	Set speed through AI1
1	0	Constant speed 1
0	1	Constant speed 2
1	1	Constant speed 3

[4] See parameter 21.09 START INTRL FUNC.

[5] Total maximum current shared between this output and optional modules installed on the board.

RMIO board specifications

Analogue inputs

	Two programmable differential current inputs (0 mA / 4 mA ... 20 mA, R_{in} = 100 ohm) and one programmable differential voltage input (-10 V / 0 V / 2 V ... +10 V, R_{in} = 200 kohm). The analogue inputs are galvanically isolated as a group.
Insulation test voltage	500 V AC, 1 min
Max. common mode voltage between the channels	±15 V DC
Common mode rejection ratio	≥ 60 dB at 50 Hz
Resolution	0.025% (12-bit) for the -10 V ... +10 V input. 0.5% (11-bit) for the 0 ... +10 V and 0 ... 20 mA inputs.
Inaccuracy	± 0.5% (Full Scale Range) at 25 °C (77 °F). Temperature coefficient: ± 100 ppm/°C (± 56 ppm/°F), max.

Constant voltage output

Voltage	+10 V DC, 0, -10 V DC ± 0.5% (Full Scale Range) at 25 °C (77 °F). Temperature coefficient: ± 100 ppm/°C (± 56 ppm/°F) max.
Maximum load	10 mA
Applicable potentiometer	1 kohm to 10 kohm

Auxiliary power output

Voltage	24 V DC ± 10%, short circuit proof
Maximum current	250 mA (shared between this output and optional modules installed on the RMIO)

Analogue outputs

	Two programmable current outputs: 0 (4) to 20 mA, R_L ≤ 700 ohm
Resolution	0.1% (10-bit)
Inaccuracy	± 1% (Full Scale Range) at 25 °C (77 °F). Temperature coefficient: ± 200 ppm/°C (± 111 ppm/°F) max.

Digital inputs

	Six programmable digital inputs (common ground: 24 V DC, -15% to +20%) and a start interlock input. Group isolated, can be divided into two isolated groups (see *Isolation and grounding diagram* below). Thermistor input: 5 mA, < 1.5 kohm ≙ “1” (normal temperature), > 4 kohm ≙ “0” (high temperature), open circuit ≙ “0” (high temperature). Internal supply for digital inputs (+24 V DC): short-circuit proof. An external 24 V DC supply can be used instead of the internal supply.
Insulation test voltage	500 V AC, 1 min
Logical thresholds	< 8 V DC ≙ “0”, > 12 V DC ≙ “1”
Input current	DI1 to DI 5: 10 mA, DI6: 5 mA
Filtering time constant	1 ms

Relay outputs

	Three programmable relay outputs
Switching capacity	8 A at 24 V DC or 250 VAC, 0.4 A at 120 V DC
Minimum continuous current	5 mA rms at 24 V DC
Maximum continuous current	2 A rms
Insulation test voltage	4 kV AC, 1 minute

DDCS fiber-optic link

	With optional communication adapter module RDCO. Protocol: DDCS (ABB Distributed Drives Communication System)

24 V DC power input

Voltage	24 V DC ± 10%
Typical current consumption (without optional modules)	250 mA
Maximum current consumption	1200 mA (with optional modules inserted)

The terminals on the RMIO board as well as on the optional modules attachable to the board fulfill the Protective Extra Low Voltage (PELV) requirements stated in EN 50178 provided that the external circuits connected to the terminals also fulfill the requirements and the installation site is below 2000 m (6562 ft). Above 2000 m (6562 ft), see page 61.

Isolation and grounding diagram

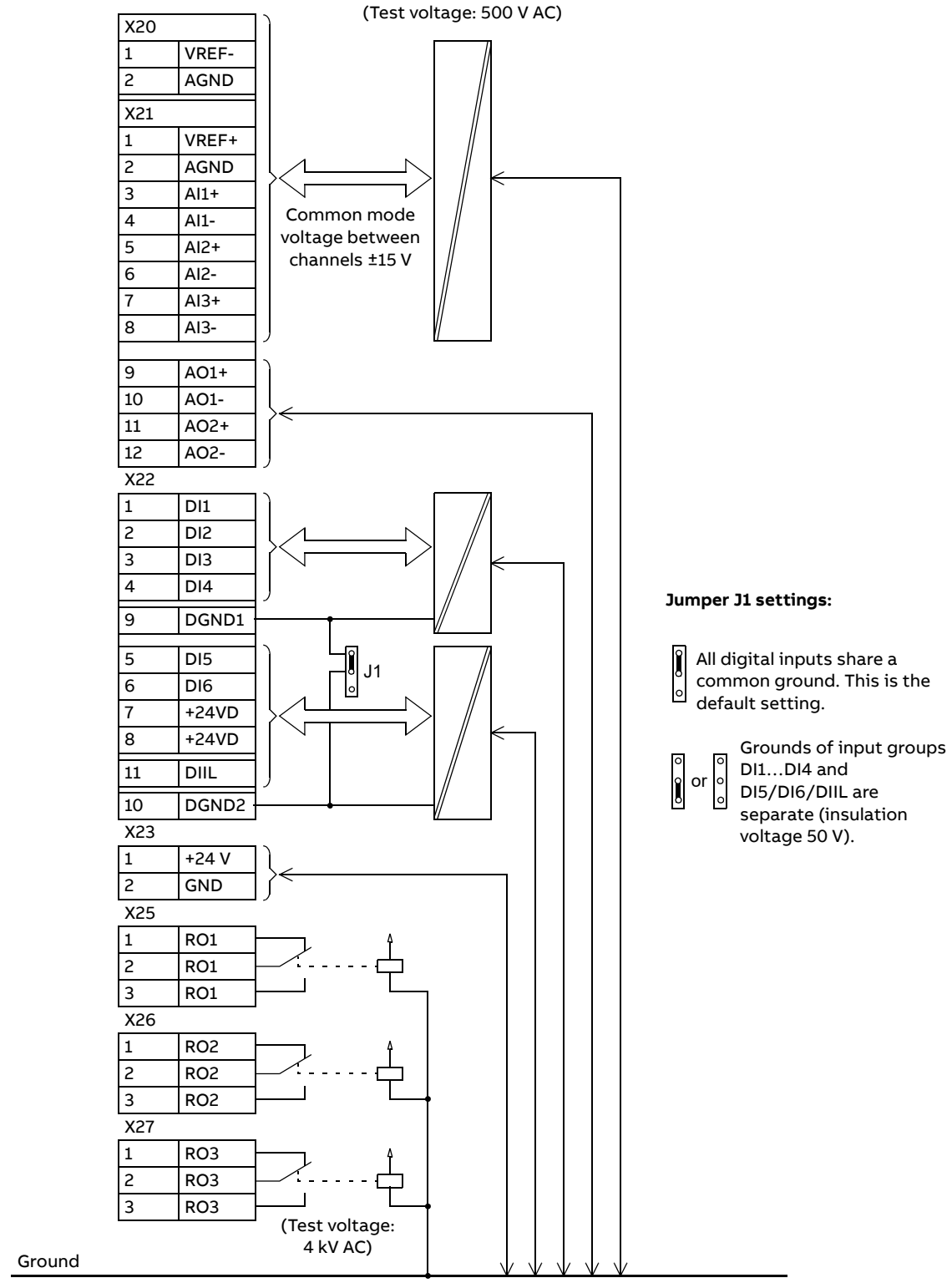

8

Installation checklist

What this chapter contains

This chapter contains the installation checklist.

Checklist

Check the mechanical and electrical installation of the drive before start-up. Go through the checklist below together with another person. Read the *Safety instructions* (page 11) in this manual before you do work on the unit.

Check	
MECHANICAL INSTALLATION	
The ambient operating conditions are allowed. See *Ambient conditions* (page 122), *IEC data* (page 99) or *NEMA data* (page 114).	☐
The unit is fixed properly on floor and a vertical non-flammable wall. See *Mechanical installation* (page 33).	☐
The cooling air flows freely.	☐
ELECTRICAL INSTALLATION See *Planning the electrical installation* (page 37), *Electrical installation* (page 63).	
The motor and the driven equipment are ready for start. See *Motor selection and compatibility* (page 38), *Motor connection* (page 120).	☐
The +E202 EMC filter capacitors are disconnected if the drive is connected to an IT (ungrounded) system.	☐
The capacitors are reformed if stored over one year (refer to *Capacitor reforming instructions* (3BFE64059629 [English]).	☐

Check	
The drive is grounded properly.	☐
The mains (input power) voltage matches the drive nominal input voltage.	☐
The mains (input power) connections at U1, V1 and W1 and their tightening torques are OK.	☐
Appropriate mains (input power) fuses and disconnector are installed.	☐
The motor connections at U2, V2 and W2 and their tightening torques are OK.	☐
The motor cable is routed away from other cables.	☐
Setting of the fan voltage transformer	☐
There are no power factor compensation capacitors in the motor cable.	☐
The external control connections inside the drive are OK.	☐
There are no tools, foreign objects or dust from drilling inside the drive.	☐
Mains (input power) voltage cannot be applied to the output of the drive (with bypass connection).	☐
Drive, motor connection box and other covers are in place.	☐

9

Start-up and use

What this chapter contains

This chapter describes the start-up procedure and use of the drive.

Start-up procedure

1. Ensure that the installation of the drive has been checked according to the checklist in the Installation checklist, and that the motor and driven equipment are ready for start.
2. Switch the power on and set-up the drive control program according to the start-up instructions given in the drive firmware manual.
3. Validate the Prevention of unexpected start-up function (option +Q950) according these the instructions.

Action	
Obey the safety instructions, see *Safety instructions* (page 11).	☐
Make sure that the drive can be run and stopped freely during the start-up.	☐
Stop the drive (if it operates), switch the input power off and isolate the drive from the power line with a disconnector.	☐
Check the Prevention of unexpected start-up circuit connections against the circuit diagram.	☐
Close the disconnector and switch the power on.	☐
Test the operation of the Prevention of unexpected start-up function when the motor is stopped: • Give a stop command for the drive (if running) and wait until the motor shaft is at standstill. • Activate the Prevention of unexpected start-up function and give a start command for the drive. • Ensure that the drive does not start and the motor stays at standstill. • Deactivate the Prevention of unexpected start-up function.	☐

4. Validate the Safe torque off function (option +Q967) according to the instructions given in *ACS800-01/04/11/31/104/104LC Safe torque off function (+Q967), Application guide* (3AUA0000063373 [English]).

Control panel

The user interface of the drive is the control panel (type CDP 312R). For more information on using the control panel, see the firmware manual delivered with the drive.

Removing the control panel

To remove the control panel from the panel holder, press down the locking clip and pull the panel out.

10

Maintenance

What this chapter contains

This chapter contains preventive maintenance instructions.

Safety

WARNING! Obey the Safety instructions (page 11) in this manual before you do maintenance on the equipment. Ignoring the safety instructions can cause injury or death.

WARNING! The drive module is heavy [frame size R7: 100 kg (220 lb), frame size R8: 200 kg (441 lb)]. Lift the module by the upper part using the lifting lugs attached to the top of the unit. Do not tilt the drive module. The center of gravity of the unit is high. The unit will fall from a tilt angle of approximately 6 degrees. An falling unit can cause physical injury.

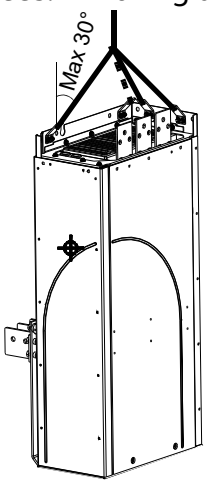

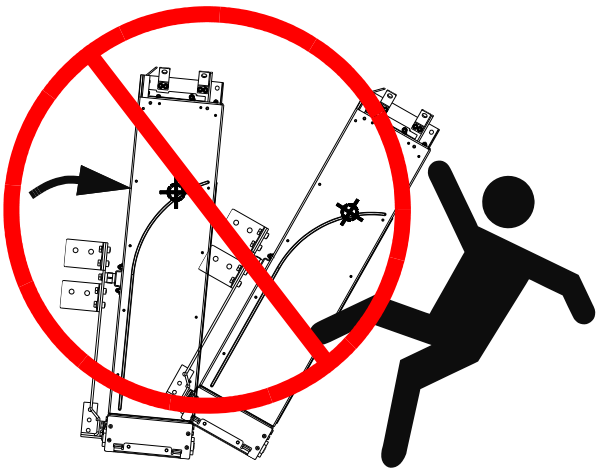

Do not tilt!

Maintenance intervals

If installed in an appropriate environment, the drive requires very little maintenance. This table lists the routine maintenance intervals recommended by ABB.

Interval	Maintenance	Instruction
Every year when stored	Capacitor reforming	See Reforming (page 95).
Every 6 to 12 months (depending on the dustiness of the environment)	Heatsink temperature check and cleaning	See Heatsink (page 92).
Every 6 years	Cooling fan replacement	See Fan (page 92).
Every 9 years	Capacitor replacement	See Capacitors (page 95).

Consult your local ABB Service representative for more details on the maintenance. On the Internet, go to http://www.abb.com/drives.

Layout

The layout stickers of the drive are shown below. The stickers show all possible components. Not all of them are present in each delivery or described here. Components that need to be changed regularly are listed below:

Designation	Component
Y41	Cooling fan
C_	Capacitors

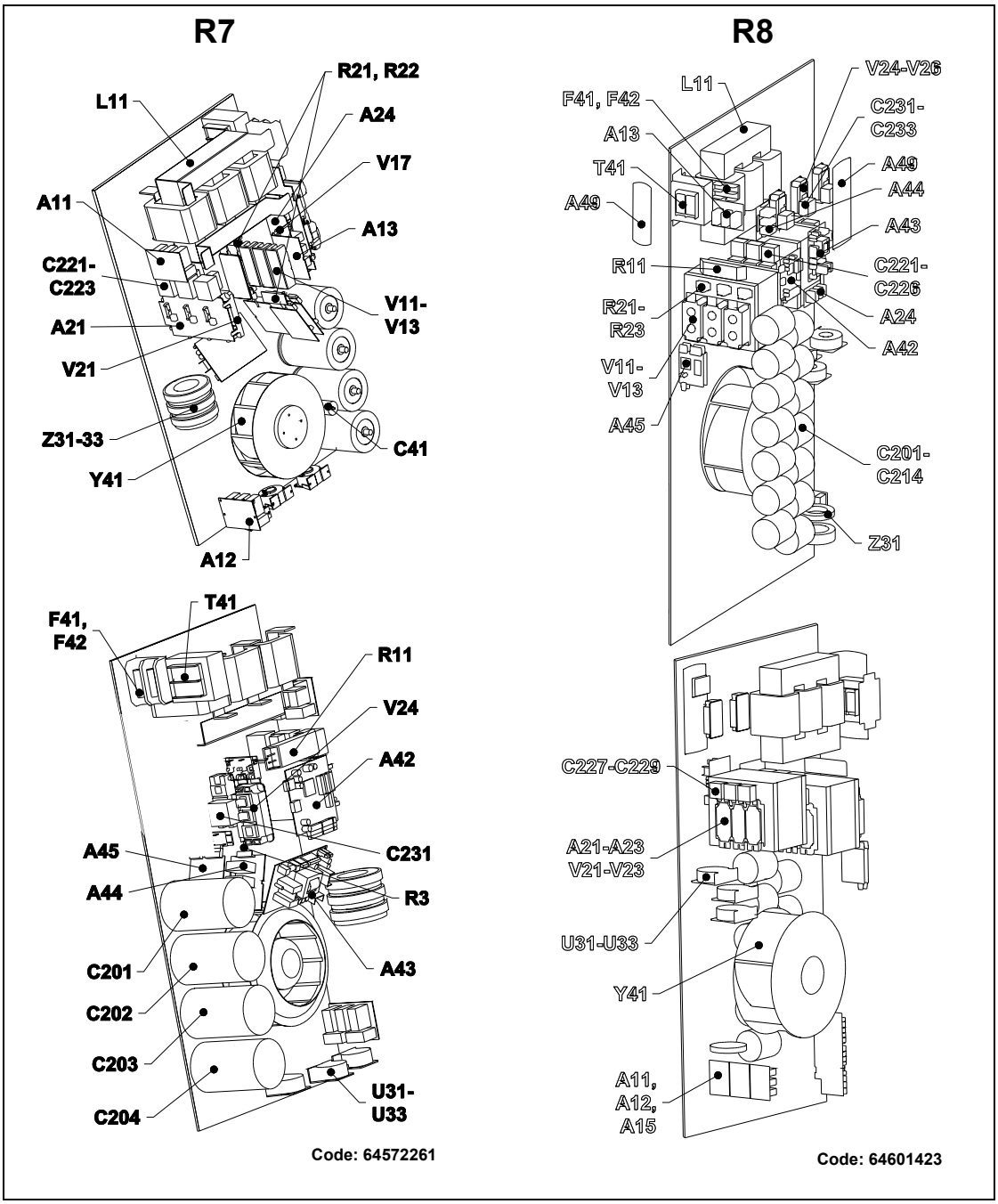

Heatsink

Check the cleanliness of the cabinet and the surroundings. When necessary, clean the interior of the cabinet with a soft brush and a vacuum cleaner.

The module heatsink fins pick up dust from the cooling air. The drive runs into overtemperature warnings and faults if the heatsink is not clean. When necessary, contact ABB for cleaning of the heatsink.

Fan

The lifespan of the cooling fan depends on the drive usage and ambient temperature. See the appropriate ACS800 firmware manual for the actual signal which indicates the running time of the cooling fan. For resetting the running time signal after a fan replacement, please contact ABB.

Replacement fans are available from ABB. Do not use other than ABB specified spare parts.

Replacing the fan (R7)

1. Remove the front cover.
2. Disconnect the discharging resistor wire(s).
3. Remove the DC capacitor pack by undoing the red fixing screws and pulling the pack out.
4. Disconnect the fan supply wires (detachable connector).
5. Disconnect the fan capacitor wires.
6. Disconnect the AINP board wires from connectors X1 and X2.
7. Remove the red fixing screws of the fan cassette.
8. Press the snap-on holders to release the side cover.
9. Lift the handle and pull the fan cassette out.
10. Install the new fan and fan capacitor in reverse order to the above.

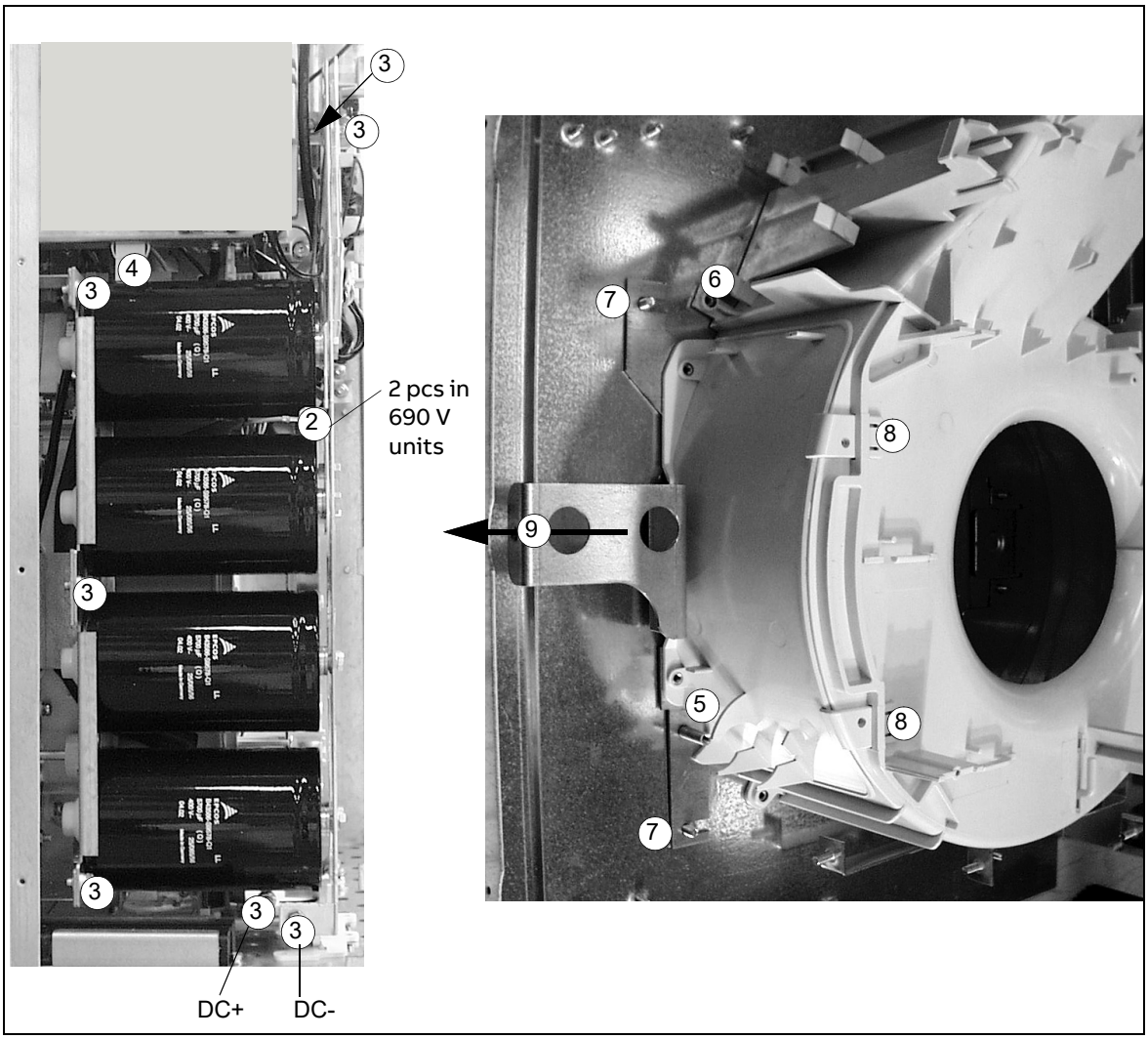

Replacing the fan (R8)

1. Remove the front cover.
2. Disconnect the fan capacitor and power supply wires.
3. Remove the red fastening screws of the plastic side cover of the fan. Shift the cover to the right to free its right-hand edge and lift the cover off.
4. Remove the red fastening screws of the fan.
5. Lift the fan out of the cabinet.
6. Install the new fan and fan capacitor in reverse order to the above.

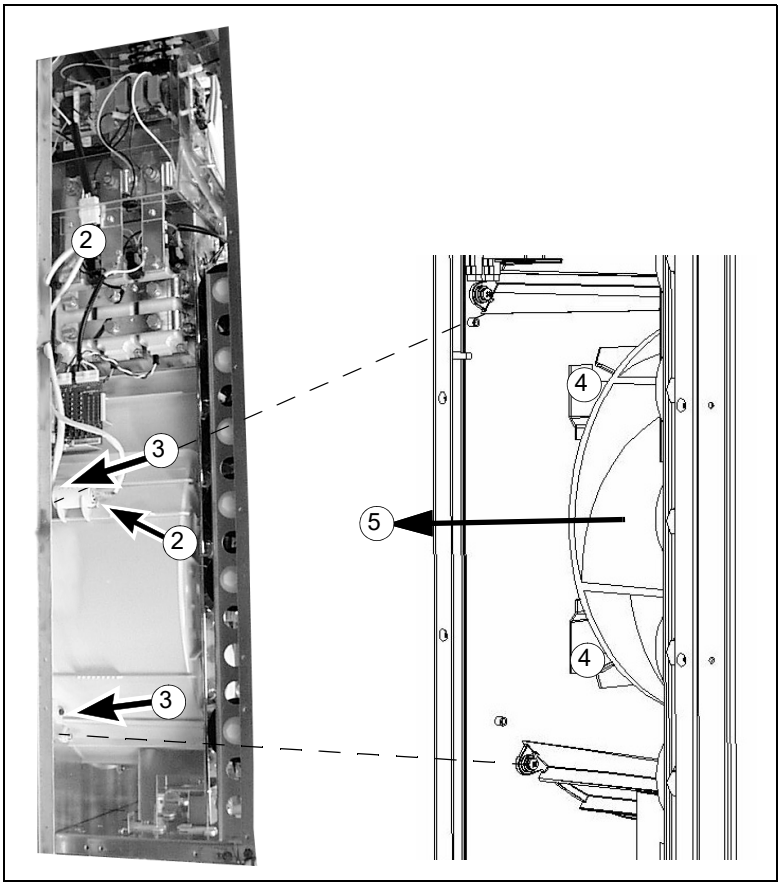

Capacitors

The drive intermediate circuit employs several electrolytic capacitors. The lifespan depends on drive loading and ambient temperature. Capacitor life can be prolonged by lowering the ambient temperature.

It is not possible to predict a capacitor failure. Capacitor failure is usually followed by damage to the unit and an input cable fuse failure, or a fault trip. Contact ABB if capacitor failure is suspected. Replacements are available from ABB. Do not use other than ABB specified spare parts.

Reforming

Reform (re-age) spare part capacitors once a year according to *Converter modules with electrolytic DC capacitors in the DC link, Capacitor reforming instructions* (3BFE64059629 [English]).

Replacing the capacitor pack (R7)

Replace the capacitor pack as described in *Replacing the fan (R7)* (page 93).

Replacing the capacitor pack (R8)

1. Remove the front cover. Remove the profiled side plate.
2. Disconnect the discharging resistor wires.
3. Remove the fastening screws.
4. Lift the capacitor pack out.
5. Install the new capacitor pack in reverse order to the above.

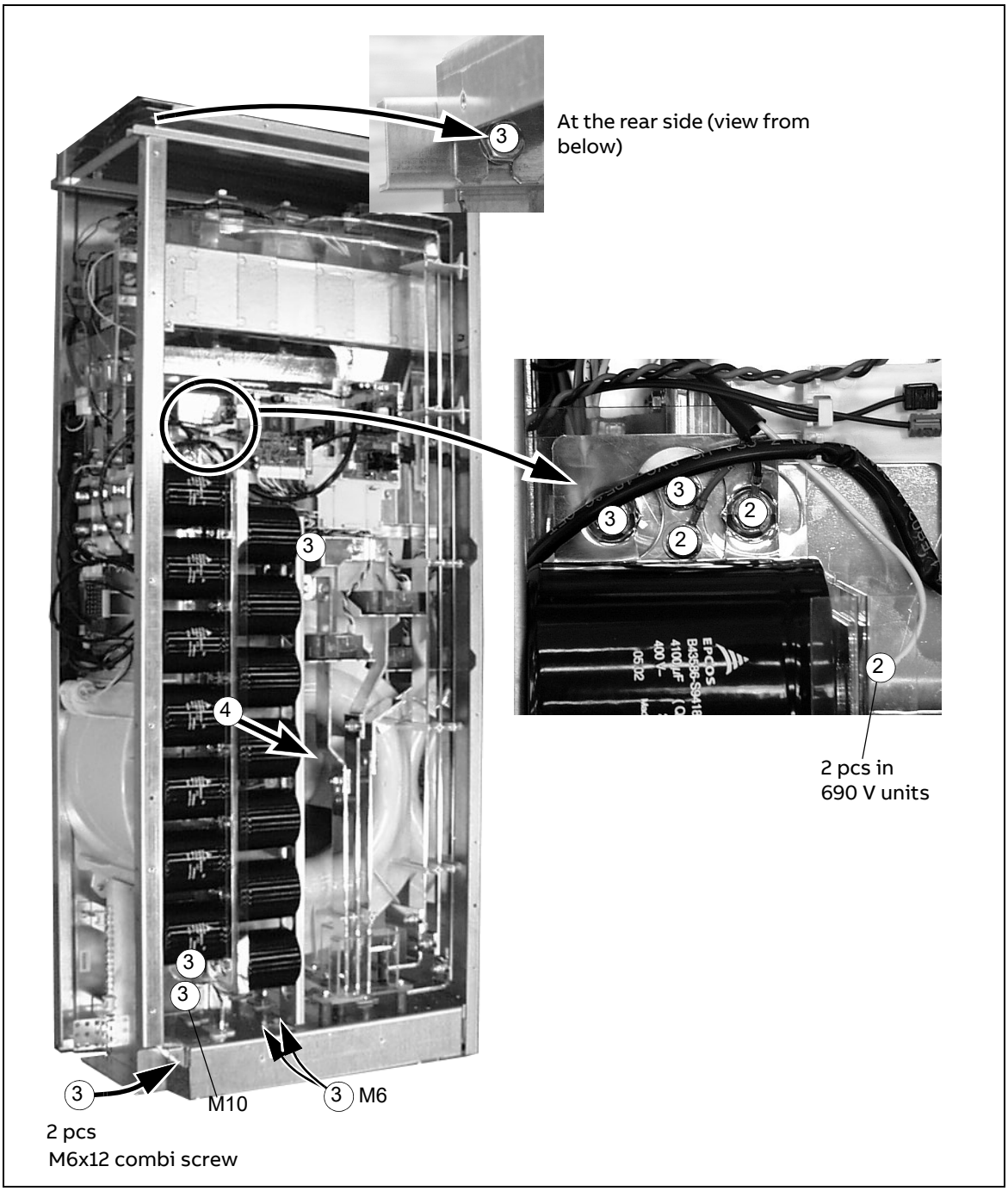

Replacing the drive module

1. Disconnect the input power cable from the module.
2. Disconnect the power supply cable and the fiber-optic cables from the RMIO board and coil them on the top of the converter module.
3. Disconnect the busbars outside the module.
4. Remove the upper fastening screws of the module (if used).
5. Disconnect the pedestal from the module by undoing the fastening (a) and busbar connecting (b) screws.

Frame size R7

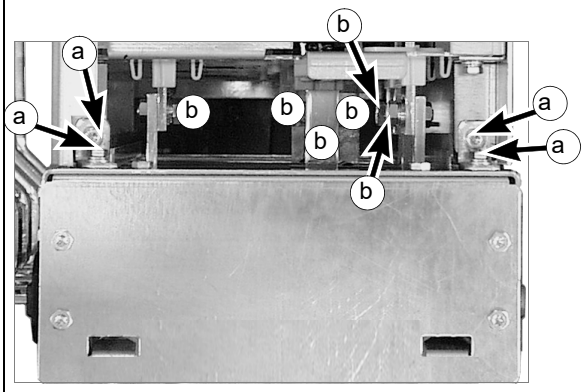

(a) M6 combi screw
Tightening torque: 5 Nm (3.7 lbf ft)

(b) M8x25 combi screw
Tightening torque: 15...22 Nm (11...16 lbf ft)

Frame size R8

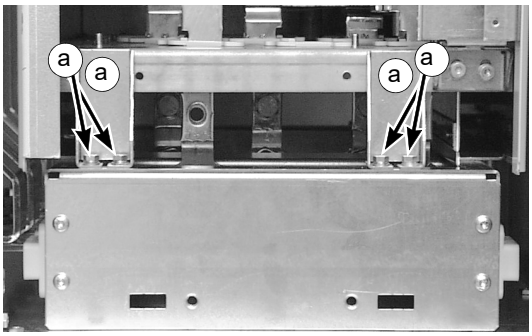

(a) M6x16 combi screws
Tightening torque: 5 Nm (3.7 lbf ft)

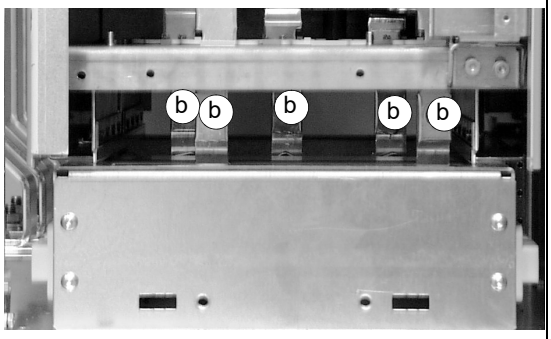

(b) M10x25 combi screws
Tightening torque: 30...44 Nm (22...32 lbf ft)

6. Secure the module from the lifting hooks at the top.
7. Pull the module from the cabinet onto a pallet truck.
8. Install the new module in reverse order to the above.

LEDs

This table describes LEDs of the drive.

Where	LED	When the LED is lit
RMIO board	Red	Drive in fault state
	Green	The power supply on the board is OK.
Control panel mounting platform	Red	Drive in fault state
	Green	The main + 24 V power supply for the control panel and the RMIO board is OK.
AINT board	V204 (green)	+5 V voltage of the board is OK.
	V309 (red)	Prevention of unexpected start-up (option +Q950) or Safe torque off (option +Q967) is ON.
	V310 (green)	IGBT control signal transmission to the gate driver control boards is enabled.

11

Technical data

What this chapter contains

This chapter contains the technical specifications of the drive, for example, the ratings, sizes and technical requirements, provisions for fulfilling the requirements for CE and other markings, and warranty policy.

IEC data

Ratings

The IEC ratings for the ACS800-04 with 50 Hz and 60 Hz supplies are given below. The symbols are described below the table.

ACS800-04 size	Nominal ratings		No-overload use	Light-overload use		Heavy-duty use		Size	Air flow	Heat dissipation[5]
	$I_{cont.max}$ A	I_{max} A	$P_{cont.max}$ kW	I_{2N} A	P_N kW	I_{2hd} A	P_{hd} kW		m^3/h	W
Three-phase supply voltage 208 V, 220 V, **230 V** or 240 V										
-0080-2	214	326	55	211	55	170	45	R7	540	2900
-0100-2	253	404	75	248	75	202	55	R7	540	3450
-0120-2	295	432	90	290	90	240 [4]	55	R7	540	4050
-0140-2	405	588	110	396	110	316	90	R8	1220	5300
-0170-2	447	588	132	440	132	340	90	R8	1220	6100

ACS800-04 size	Nominal ratings		No-overload use	Light-overload use		Heavy-duty use		Size	Air flow	Heat dissipation(5
	$I_{cont.max}$ A	I_{max} A	$P_{cont.max}$ kW	I_{2N} A	P_N kW	I_{2hd} A	P_{hd} kW		m^3/h	W
-0210-2	528	588	160	516	160	370	110	R8	1220	6700
-0230-2	613	840	160	598	160	480	132	R8	1220	7600
-0260-2	693	1017	200	679	200	590 2)	160	R8	1220	7850
-0300-2	720	1017	200	704	200	635 3)	200	R8	1220	8300
Three-phase supply voltage 380 V, **400 V** or 415 V										
-0140-3	206	326	110	202	110	163	90	R7	540	3000
-0170-3	248	404	132	243	132	202	110	R7	540	3650
-0210-3	289	432	160	284	160	240 1)	132	R7	540	4300
-0260-3	445	588	200	440	200	340	160	R8	1220	6600
-0320-3	521	588	250	516	250	370	200	R8	1220	7150
-0400-3	602	840	315	590	315	477	250	R8	1220	8100
-0440-3	693	1017	355	679	355	590 2)	315	R8	1220	8650
-0490-3	720	1017	400	704	400	635 3)	355	R8	1220	9100
Three-phase supply voltage 380 V, 400 V, 415 V, 440 V, 460 V, 480 V or **500** V										
-0170-5	196	326	132	192	132	162	110	R7	540	3000
-0210-5	245	384	160	240	160	192	132	R7	540	3800
-0260-5	289	432	200	284	200	224	160	R7	540	4500
-0320-5	440	588	250	435	250	340	200	R8	1220	6850
-0400-5	515	588	315	510	315	370	250	R8	1220	7800
-0440-5	550	840	355	545	355	490	315	R8	1220	7600
-0490-5	602	840	400	590	400	515 2)	355	R8	1220	8100
-0550-5	684	1017	450	670	450	590 2)	400	R8	1220	9100
-0610-5	718	1017	500	704	500	632 3)	450	R8	1220	9700
Three-phase supply voltage 525 V, 550 V, 575 V, 600 V, 660 V or **690** V										
-0140-7	134	190	132	125	110	95	90	R7	540	2800
-0170-7	166	263	160	155	132	131	110	R7	540	3550
-0210-7	166/203*	294	160	165/195*	160	147	132	R7	540	4250
-0260-7	175/230*	326	160/200*	175/212*	160/200*	163	160	R7	540	4800
-0320-7	315	433	315	290	250	216	200	R8	1220	6150
-0400-7	353	548	355	344	315	274	250	R8	1220	6650

ACS800-04 size	Nominal ratings		No-over-load use	Light-overload use		Heavy-duty use		Size	Air flow	Heat dis-sipa-tion(5
	$I_{cont.max}$ A	I_{max} A	$P_{cont.max}$ kW	I_{2N} A	P_N kW	I_{2hd} A	P_{hd} kW		m^3/h	W
-0440-7	396	656	400	387	355	328	315	R8	1220	7400
-0490-7	445	775	450	426	400	387	355	R8	1220	8450
-0550-7	488	853	500	482	450	426	400	R8	1220	8300
-0610-7	560	964	560	537	500	482	450	R8	1220	9750

00096931

1) 50% overload is available for one minute every 5 minutes if ambient temperature is less than 25 °C (77 °F). If ambient temperature is 40 °C (104 °F), max. available overload is 37%.

2) 50% overload is available for one minute every 5 minutes if ambient temperature is less than 30 °C (86 °F). If ambient temperature is 40 °C (104 °F), max. available overload is 40%.

3) 50% overload is available one minute every 5 minutes if ambient temperature is less than 20 °C (68 °F). If ambient temperature is 40 °C (104 °F), max. available overload is 30%.

4) 50% overload is available one minute every 5 minutes if ambient temperature is less than 35 °C (95 °F). If ambient temperature is 40 °C (104 °F), max. available overload is 45%.

5) These values are not calculated according to the ecodesign standard IEC 61800-9-2.

*) Higher value applicable if output frequency is above 41 Hz.

Symbols

Nominal ratings

$I_{cont.max}$ continuous rms output current. No overload capability at 40 °C (104 °F).

I_{max} maximum output current. Available for 10 s at start, otherwise as long as allowed by drive temperature.

Typical ratings:

No-overload use

$P_{cont.max}$ typical motor power. The power ratings apply to most IEC 60034 motors at the nominal voltage, 230 V, 400 V, 500 V or 690 V.

Light-overload use (10% overload capability)

I_{2N} continuous rms current. 10% overload is allowed for one minute every 5 minutes.

P_N typical motor power. The power ratings apply to most IEC 60034 motors at the nominal voltage, 230 V, 400 V, 500 V or 690 V.

Heavy-duty use (50% overload capability)

I_{2hd} continuous rms current. 50% overload is allowed for one minute every 5 minutes.

P_{hd} typical motor power. The power ratings apply to most IEC 60034 motors at the nominal voltage, 230 V, 400 V, 500 V or 690 V.

Sizing

The current ratings are the same regardless of the supply voltage within one voltage range. To achieve the rated motor power given in the table, the rated current of the drive must be higher than or equal to the rated motor current.

Note 1: The maximum allowed motor shaft power is limited to 1.5 · P_{hd}, 1.1 · P_N or $P_{cont.max}$ (whichever value is greatest). If the limit is exceeded, motor torque and current are automatically restricted. The function protects the input bridge of the drive against overload. If the condition exists for 5 minutes, the limit is set to $P_{cont.max}$.

Note 2: The ratings apply at ambient temperature of 40 °C (104 °F). In lower temperatures the ratings are higher (except I_{max}).

Note 3: Use the DriveSize PC tool for a more accurate dimensioning if the ambient temperature is below 40 °C (104 °F) or the drive is loaded cyclically.

Derating

The load capacity (current and power) decreases if the installation site altitude exceeds 1000 m (3281 ft), or if the ambient temperature exceeds 40 °C (104 °F).

Note: If the ingoing cooling air temperature of the drive module is max. 40 °C (104 °F), no derating of the drive output current is needed despite the cabinet temperature rising over 40 °C (104 °F).

Temperature derating

In the temperature range of +40 °C (+104 °F) to +50 °C (+122 °F), the rated output current is decreased by 1% for every additional 1 °C (1.8 °F). The output current is calculated by multiplying the current given in the rating table by the derating factor.

Example: If the ambient temperature is 50 °C (+122 °F), the derating factor is

$100\% - 1 \frac{\%}{°C} \cdot 10\ °C = 90\%$ or 0.90.

The output current is then 0.90 · I_{2N} , 0.90 · I_{2hd} or 0.90 · $I_{cont.max}$.

Altitude derating

At altitudes from 1000 to 4000 m (3281 to 13123 ft) above sea level, the derating is 1% for every 100 m (328 ft). For a more accurate derating, use the DriveSize PC tool. See *Installation sites above 2000 metres (6562 feet)* (page 61).

Fuses

gG and aR fuses for protection against short circuit in the input power cable or drive are listed below. Either fuse type can be used if it operates rapidly enough. Choose between gG and aR fuses according to the table under *Quick guide for selecting between gG and aR fuses* (page 109), or verify the operating time by checking that the short-circuit current of the installation is at least the value given in the fuse table. The short-circuit current can be calculated as follows:

$$I_{k2\text{-}ph} = \frac{U}{2 \cdot \sqrt{R_c^2 + (Z_k + X_c)^2}}$$

where

$I_{k2\text{-}ph}$ = short-circuit current in symmetrical two-phase short circuit (A)

U = network line-to-line voltage (V)

R_c = cable resistance (ohm)

$Z_k = z_k \cdot U_N^2 / S_N$ = transformer impedance (ohm)

z_k = transformer impedance (%)

U_N = transformer rated voltage (V)

S_N = nominal apparent power of the transformer (kVA)

X_c = cable reactance (ohm).

Calculation example

Drive:

- ACS800-04-0260-3
- supply voltage U = 410 V

Transformer:

- rated power S_N = 3000 kVA
- rated voltage U_N = 430 V
- transformer impedance z_k = 7.2%.

Supply cable:

- length = 170 m
- resistance/length = 0.112 ohm/km
- reactance/length = 0.0273 ohm/km.

$$Z_k = z_k \cdot \frac{U_N^2}{S_N} = 0.072 \cdot \frac{(430\ \text{V})^2}{3000\ \text{kVA}} = 4.438\ \text{mohm}$$

$$R_c = 170\ \text{m} \cdot 0.112\ \frac{\text{ohm}}{\text{km}} = 19.04\ \text{mohm}$$

$$X_c = 170\ \text{m} \cdot 0.0273\ \frac{\text{ohm}}{\text{km}} = 4.641\ \text{mohm}$$

$$I_{k2\text{-ph}} = \frac{410\ \text{V}}{2 \cdot \sqrt{(19.04\ \text{mohm})^2 + (4.438\ \text{mohm} + 4.641\ \text{mohm})^2}} = 9.7\ \text{kA}$$

The calculated short-circuit current 9.7 kA is higher than the minimum short-circuit current of the drive gG fuse type OFAF3H500 (8280 A). -> The 500 V gG fuse (ABB Control OFAF3H500) can be used.

Fuse tables

gG fuses								
ACS800-04 size	**Input current**	**Min. short-circuit current 1)**	**Fuse**					
	A	A	A	A^2s	V	Manufacturer	Type	IEC size
Three-phase supply voltage 208 V, 220 V, **230 V** or 240 V								
-0080-2	201	3820	250	550 000	500	ABB Control	OFAF1H250	1
-0100-2	239	4510	315	1 100 000	500	ABB Control	OFAF2H315	2
-0120-2	285	4510	315	1 100 000	500	ABB Control	OFAF2H315	2
-0140-2	391	8280	500	2 900 000	500	ABB Control	OFAF3H500	3
-0170-2	428	8280	500	2 900 000	500	ABB Control	OFAF3H500	3
-0210-2	506	10200	630	4 000 000	500	ABB Control	OFAF3H630	3
-0230-2	599	10200	630	4 000 000	500	ABB Control	OFAF3H630	3
-0260-2	677	13500	800	7 400 000	500	ABB Control	OFAF3H800	3
-0300-2	707	13500	800	7 400 000	500	ABB Control	OFAF3H800	3
Three-phase supply voltage 380 V, **400 V** or 415 V								
-0140-3	196	3820	250	550 000	500	ABB Control	OFAF1H250	1
-0170-3	237	4510	315	1 100 000	500	ABB Control	OFAF2H315	2
-0210-3	286	4510	315	1 100 000	500	ABB Control	OFAF2H315	2
-0260-3	438	8280	500	2 900 000	500	ABB Control	OFAF3H500	3
-0320-3	501	10200	630	4 000 000	500	ABB Control	OFAF3H630	3
-0400-3	581	10200	630	4 000 000	500	ABB Control	OFAF3H630	3
-0440-3	674	13500	800	7 400 000	500	ABB Control	OFAF3H800	3
-0490-3	705	13500	800	7 400 000	500	ABB Control	OFAF3H800	3

gG fuses								
ACS800-04 size	**Input current**	**Min. short-circuit current** [1]	**Fuse**					
	A	A	A	A^2s	V	Manufacturer	Type	IEC size
Three-phase supply voltage 380 V, 400 V, 415 V, 440 V, 460 V, 480 V or **500 V**								
-0170-5	191	3820	250	550 000	500	ABB Control	OFAF1H250	1
-0210-5	243	4510	315	1 100 000	500	ABB Control	OFAF2H315	2
-0260-5	291	4510	315	1 100 000	500	ABB Control	OFAF2H315	2
-0320-5	424	8280	500	2 900 000	500	ABB Control	OFAF3H500	3
-0400-5	498	10200	630	4 000 000	500	ABB Control	OFAF3H630	3
-0440-5	543	10200	630	4 000 000	500	ABB Control	OFAF3H630	3
-0490-5	590	10200	630	4 000 000	500	ABB Control	OFAF3H630	3
-0550-5	669	13500	800	7 400 000	500	ABB Control	OFAF3H800	3
-0610-5	702	13500	800	7 400 000	500	ABB Control	OFAF3H800	3
Three-phase supply voltage 525 V, 550 V, 575 V, 600 V, 660 V or **690 V**								
-0140-7	126	2400	160	220 000	690	ABB Control	OFAA1GG160	1
-0170-7	156	2850	200	350 000	690	ABB Control	OFAA1GG200	1
-0210-7	191	3820	250	700 000	690	ABB Control	OFAA2GG250	2
-0260-7	217	3820	250	700 000	690	ABB Control	OFAA2GG250	2
-0320-7	298	4510	315	820 000	690	ABB Control	OFAA2GG315	2
-0400-7	333	6180	400	1 300 000	690	ABB Control	OFAA3GG400	3
-0440-7	377	8280	500	3 800 000	690	ABB Control	OFAA3H500	3
-0490-7	423	8280	500	3 800 000	690	ABB Control	OFAA3H500	3
-0550-7	468	8280	500	3 800 000	690	ABB Control	OFAA3H500	3
-0610-7	533	10800	630	10 000 000	690	Bussmann	630NH3G-690 **	3

** rated breaking capacity only up to 50 kA

[1] minimum short-circuit current of the installation

Note 1: See *Thermal overload and short-circuit protection* (page 46). For UL recognized fuses, see *NEMA data* (page 114).

Note 2: In multi-cable installations, install only one fuse per phase (not one fuse per conductor).

Note 3: Larger fuses than the recommended ones must not be used.

Note 4: Fuses from other manufacturers can be used if they meet the ratings and the melting curve of the fuse does not exceed the melting curve of the fuse mentioned in the table.

00096931, 00556489

Ultrarapid (aR) fuses								
ACS800-04 size	**Input current** A	**Min. short-circuit current** [1] A	**Fuse**					
			A	A^2s	V	Manufacturer	Type DIN 43620	Size
Three-phase supply voltage 208 V, 220 V, **230 V** or 240 V								
-0080-2	201	1810	400	105 000	690	Bussmann	170M3819D	DIN1*
-0100-2	239	2210	500	145 000	690	Bussmann	170M5810D	DIN2*
-0120-2	285	2620	550	190 000	690	Bussmann	170M5811D	DIN2*
-0140-2	391	4000	800	465 000	690	Bussmann	170M6812D	DIN3
-0170-2	428	4000	800	465 000	690	Bussmann	170M6812D	DIN3
-0210-2	506	5550	1000	945 000	690	Bussmann	170M6814D	DIN3
-0230-2	599	7800	1250	1 950 000	690	Bussmann	170M8554D	DIN3
-0260-2	677	8850	1400	3 900 000	690	Bussmann	170M8555D	DIN3
-0300-2	707	8850	1400	3 900 000	690	Bussmann	170M8555D	DIN3
Three-phase supply voltage 380 V, **400 V** or 415 V								
-0140-3	196	1810	400	105 000	690	Bussmann	170M3819D	DIN1*
-0170-3	237	2210	500	145 000	690	Bussmann	170M5810D	DIN2*
-0210-3	286	2620	550	190 000	690	Bussmann	170M5811D	DIN2*
-0260-3	438	4000	800	465 000	690	Bussmann	170M6812D	DIN3
-0320-3	501	5550	1000	945 000	690	Bussmann	170M6814D	DIN3
-0400-3	581	7800	1250	1 950 000	690	Bussmann	170M8554D	DIN3
-0440-3	674	8850	1400	3 900 000	690	Bussmann	170M8555D	DIN3
-0490-3	705	8850	1400	3 900 000	690	Bussmann	170M8555D	DIN3
Three-phase supply voltage 380 V, 400 V, 415 V, 440 V, 460 V, 480 V or **500 V**								
-0170-5	191	1810	400	105 000	690	Bussmann	170M3819D	DIN1*
-0210-5	243	2210	500	145 000	690	Bussmann	170M5810D	DIN2*
-0260-5	291	2620	550	190 000	690	Bussmann	170M5811D	DIN2*
-0320-5	424	4000	800	465 000	690	Bussmann	170M6812D	DIN3
-0400-5	498	5550	1000	945 000	690	Bussmann	170M6814D	DIN3
-0440-5	543	7800	1250	1 950 000	690	Bussmann	170M8554D	DIN3
-0490-5	590	7800	1250	1 950 000	690	Bussmann	170M8554D	DIN3
-0550-5	669	8850	1400	3 900 000	690	Bussmann	170M8555D	DIN3
-0610-5	702	8850	1400	3 900 000	690	Bussmann	170M8555D	DIN3
Three-phase supply voltage 525 V, 550 V, 575 V, 600 V, 660 V or **690 V**								
-0140-7	126	1520	350	68 500	690	Bussmann	170M3818D	DIN1*

Ultrarapid (aR) fuses								
ACS800-04 size	**Input current** A	**Min. short-circuit current** [1] A	**Fuse**					
			A	A^2s	V	Manufacturer	Type DIN 43620	Size
-0170-7	156	1520	350	68 500	690	Bussmann	170M3818D	DIN1*
-0210-7	191	1610	400	74 000	690	Bussmann	170M5808D	DIN2*
-0260-7	217	1610	400	74 000	690	Bussmann	170M5808D	DIN2*
-0320-7	298	3010	630	275 000	690	Bussmann	170M5812D	DIN2*
-0400-7	333	2650	630	210 000	690	Bussmann	170M6810D	DIN3
-0440-7	377	4000	800	465 000	690	Bussmann	170M6812D	DIN3
-0490-7	423	4790	900	670 000	690	Bussmann	170M6813D	DIN3
-0550-7	468	4790	900	670 000	690	Bussmann	170M6813D	DIN3
-0610-7	533	5550	1000	945 000	690	Bussmann	170M6814D	DIN3

A^2s value for -7 units at 660 V

[1] minimum short-circuit current of the installation

Note 1: See *Thermal overload and short-circuit protection* (page 46). For UL recognized fuses, see *NEMA data* (page 114).

Note 2: In multi-cable installations, install only one fuse per phase (not one fuse per conductor).

Note 3: Larger fuses than the recommended ones must not be used.

Note 4: Fuses from other manufacturers can be used if they meet the ratings and the melting curve of the fuse does not exceed the melting curve of the fuse mentioned in the table.

0009693, 00556489

Quick guide for selecting between gG and aR fuses

The table below is a short cut in selecting between gG and aR fuses. The combinations (cable size, cable length, transformer size and fuse type) in the table fulfill the minimum requirements for the proper operation of the fuse.

ACS800-04 size	Cable type		Supply transformer minimum apparent power S_N (kVA)					
	Copper	Aluminum	Maximum cable length with gG fuses			Maximum cable length with aR fuses		
			10 m	50 m	100 m	10 m	100 m	200 m
Three-phase supply voltage 208 V, 220 V, **230 V** or 240 V								
-0080-2	3×120 Cu	3×185 Al	120	150	-	81	81	-
-0100-2	3×150 Cu	3×240 Al	140	170	-	96	96	-
-0120-2	3×240 Cu	2 × (3×95) Al	140	170	-	120	120	-
-0140-2	2 × (3×120) Cu	3 × (3×95) Al	250	320	-	160	160	-
-0170-2	2 × (3×120) Cu	3 × (3×95) Al	250	320	-	180	180	-
-0210-2	3 × (3×95) Cu	2 × (3×240) Al	310	400	-	210	230	-
-0230-2	3 × (3×120) Cu	3 × (3×185) Al	310	400	-	240	340	-
-0260-2	3 × (3×150) Cu	3 × (3×240) Al	410	510	-	270	380	-
-0300-2	3 × (3×150) Cu	3 × (3×240) Al	410	510	-	290	380	-
Three-phase supply voltage 380 V, **400 V** or 415 V								
-0140-3	3×120 Cu	3×185 Al	200	220	260	160	160	160
-0170-3	3×150 Cu	3×240 Al	240	260	310	170	170	170
-0210-3	3×240 Cu	2 × (3×120) Al	240	260	310	200	200	200
-0260-3	3 × (3×70) Cu	3 × (3×120) Al	430	460	560	310	310	310
-0320-3	3 × (3×95) Cu	2 × (3×240) Al	530	600	750	350	350	440
-0400-3	3 × (3×120) Cu	3 × (3×185) Al	530	600	750	410	470	660
-0440-3	3 × (3×150) Cu	3 × (3×240) Al	700	770	930	470	530	730
-0490-3	3 × (3×150) Cu	3 × (3×240) Al	700	770	930	490	530	730
Three-phase supply voltage 380 V, 400 V, 415 V, 440 V, 460 V, 480 V or **500 V**								
-0170-5	3×120 Cu	3×150 Al	250	270	310	200	200	200
-0210-5	3×150 Cu	3×240 Al	290	320	360	220	220	220
-0260-5	3×240 Cu	2 × (3×120) Al	290	320	360	260	260	260

ACS800-04 size	Cable type		Supply transformer minimum apparent power S_N (kVA)					
	Copper	Aluminum	Maximum cable length with gG fuses			Maximum cable length with aR fuses		
			10 m	50 m	100 m	10 m	100 m	200 m
-0320-5	2 × (3×120) Cu	3 × (3×95) Al	530	570	670	370	370	370
-0400-5	2 × (3×150) Cu	2 × (3×240) Al	660	720	840	440	440	480
-0440-5	3 × (3×95) Cu	3 × (3×150) Al	660	720	840	500	570	760
-0490-5	3 × (3×120) Cu	3 × (3×185) Al	660	720	840	520	570	760
-0550-5	2 × (3×240) Cu	3 × (3×240) Al	880	980	1200	580	670	880
-0610-5	3 × (3×150) Cu	3 × (3×240) Al	880	980	1200	610	670	880
Three-phase supply voltage 525 V, 550 V, 575 V, 600 V, 660 V or **690 V**								
-0140-7	3×70 Cu	3×95 Al	220	220	240	160	160	160
-0170-7	3×95 Cu	3×120 Al	260	260	280	190	190	190
-0210-7	3×120 Cu	3×150 Al	340	360	390	230	230	230
-0260-7	3×150 Cu	3×185 Al	340	360	390	260	260	260
-0320-7	3×240 Cu	2 × (3×120) Al	400	410	430	360	360	360
-0400-7	3×240 Cu	3 x (3×70) Al	550	570	610	400	400	400
-0440-7	2 × (3×120) Cu	2 × (3×150) Al	730	780	860	460	460	460
-0490-7	2 × (3×120) Cu	3 × (3×95) Al	730	780	860	510	510	510
-0550-7	2 × (3×150) Cu	3 × (3×120) Al	730	780	860	560	560	560
-0610-7	3 × (3×95) Cu	3 × (3×150) Al	960	1000	1100	640	640	640

PDM code: 00556489 A

Note 1: The supply transformer minimum power in kVA is calculated with a z_k value of 6% and frequency 50 Hz.

Note 2: The table is not intended for transformer selection - that must be done separately.

The following parameters can effect on the correct operation of the protection:

- cable length: The longer the cable the weaker the fuse protection, as the long cable limits the fault current.
- cable size: The smaller the cable cross-section the weaker the fuse protection, as the small cable size limits the fault current.
- transformer size: The smaller the transformer the weaker the fuse protection, as the small transformer limits the fault current.
- transformer impedance: The higher the z_k the weaker the fuse protection as high impedance limits the fault current.

The protection can be improved by installing a larger supply transformer and/or bigger cables, and in most cases by selecting aR fuses instead of gG fuses. Selection of smaller fuses improves the protection, but it can affect the fuse life time and lead to unnecessary operation of the fuses.

In case of any uncertainty regarding the drive protection, please contact your local ABB.

Cable types

The table below gives copper and aluminum cable types for different load currents. Cable sizing is based on max. 9 cables laid on a cable ladder side by side, ambient temperature 30 °C, PVC insulation, surface temperature 70 °C (EN/IEC 60204-1 and IEC 60364-5-52:2001). For other conditions, size the cables according to local safety regulations, appropriate input voltage and the load current of the drive.

Copper cables with concentric copper shield		Aluminum cables with concentric copper shield	
Max. load current	**Cable type**	**Max. load current**	**Cable type**
A	mm^2	A	mm^2
56	3×16	69	3×35
71	3×25	83	3×50
88	3×35	107	3×70
107	3×50	130	3×95
137	3×70	151	3×120
167	3×95	174	3×150
193	3×120	199	3×185
223	3×150	235	3×240
255	3×185	214	2 × (3×70)
301	3×240	260	2 × (3×95)
274	2 × (3×70)	302	2 × (3×120)
334	2 × (3×95)	348	2 × (3×150)
386	2 × (3×120)	398	2 × (3×185)
446	2 × (3×150)	470	2 × (3×240)
510	2 × (3x185)	522	3 × (3×150)
602	2 × (3×240)	597	3 × (3×185)
579	3 × (3×120)	705	3 × (3×240)
669	3 × (3×150)		
765	3 × (3×185)		
903	3 × (3×240)		

3BFA 01051905 C

Cable entries

Mains, motor and brake resistor cable terminal sizes (per phase), maximum accepted cable and tightening torques are given below.

Frame size	U1, V1, W1, U2, V2, W2, UDC+/R+, UDC-, R-				Earthing PE	
	Number of holes per phase	Max. cable mm^2	Screw	Tightening torque Nm	Screw	Tightening torque Nm
R7	3	1×240 or 2×185	M12	50...75	M10	30...44
R8	3	3×240	M12	50...75	M10	30...44

Dimensions, weights and noise

Frame size	IP00								Weight	Noise
	Busbars on the long side (bookshelf)				Busbars on the short side (flat)					
	H mm	W1 mm	W2 mm	D mm	H mm	W3 mm	W4 mm	D mm	kg	dB
R7	1121	334	427	473	1181	525	631	259	100	71
R8	1564	415	562	568	1596	607	779	403	200	72

H height

W1 width of the basic unit with PE terminal (bookshelf)

W2 width with the cable connection terminal plates on the left side only (bookshelf)
(R7: width with the cable connection terminal plates on both sides is 579 mm)
(R8: width with the cable connection terminal plates on both sides is 776 mm)

D depth without fastening brackets
(R7 bookshelf: depth with fastening brackets is 516 mm)
(R8 bookshelf: depth with fastening brackets is 571 mm)

W3 width of the basic unit with PE terminal/busbar (flat)

W4 width with the cable connection terminal plates (flat)

Frame size	IP00, with bottom exit			Weight *
	H mm	W mm	D mm	kg
R7	1126	264	471	91

H height without top and bottom exit busbar shrouds

W width

D depth

* weight without top entry and bottom exit shrouds

Package dimensions and weights

Frame size	ACS800-04				ACS800-04M			
	Height mm	Width mm	Depth mm	Weight kg	Height mm	Width mm	Depth mm	Weight kg
R7	590	1250	570	25	840	1250	570	31
R8	600	1700	660	31	850	1700	660	40

NEMA data

Ratings

The NEMA ratings for the ACS800-U4 and ACS800-04 with 60 Hz supplies are given below. The symbols are described below the table. For sizing, derating and 50 Hz supplies, see *IEC data* (page 99).

ACS800-U4 size ACS800-04 size	I_{max}	Normal use		Heavy-duty use		Frame size	Air flow	Heat dissipation
	A	I_{2N} A	P_N hp	I_{2hd} A	P_{hd} hp		ft^3/min	BTU/Hr
Three-phase supply voltage 208 V, 220 V, **230 V**, 240 V								
-0080-2	326	211	75	170	60	R7	318	9900
-0100-2	404	248	100	202	75	R7	318	11750
-0120-2	432	290	100	240 4)	75	R7	318	13750
-0140-2	588	396	150	316	125	R8	718	18100
-0170-2	588	440	150	340	125	R8	718	20800
-0210-2	588	516	200	370	150	R8	718	22750
-0230-2	840	598	200	480	200	R8	718	25900
-0260-2	1017	679	250	590 3)	200	R8	718	26750
-0300-2	1017	704	250	635 3)	250	R8	718	28300
Three-phase supply voltage 380 V, 400 V, 415 V, 440 V, **460 V**, 480 V								
-0170-5	326	192	150	162	125	R7	318	10100
-0210-5	384	240	200	192	150	R7	318	12900
-0260-5	432	289 1)	250 2)	224	150	R7	318	15300
-0270-5 **	480	316	250	240	200	R8	718	15350
-0300-5 **	568	361	300	302	250	R8	718	18050
-0320-5	588	435	350	340	250	R8	718	23250
-0400-5	588	510	400	370	300	R8	718	26650
-0440-5	840	545	450	490	400	R8	718	25950
-0490-5	840	590	500	515 3)	450	R8	718	27600
-0550-5	1017	670	550	590 3)	500	R8	718	31100
-0610-5	1017	718 4)	600	590 3)	500	R8	718	33000
Three-phase supply voltage 525 V, **575 V** or 600 V								
-0140-7	190	125	125	95	100 2)	R7	318	9600
-0170-7	263	155	150	131	125	R7	318	12150
-0210-7	294	165/195*	150/200*	147	150	R7	318	14550
-0260-7	326	175/212*	150/200*	163	150	R7	318	16400

ACS800-U4 size ACS800-04 size	I_{max}	Normal use		Heavy-duty use		Frame size	Air flow	Heat dissipation
	A	I_{2N} A	P_N hp	I_{2hd} A	P_{hd} hp		ft^3/min	BTU/Hr
-0320-7	433	290	300	216	200	R8	718	21050
-0400-7	548	344	350	274	250	R8	718	22750
-0440-7	656	387	400	328	350 2)	R8	718	25300
-0490-7	775	426	450	387	400	R8	718	28900
-0550-7	853	482	500	426	450	R8	718	28350
-0610-7	964	537	500	482	500	R8	718	33300

PDM code: 00096931-G

1) Available if ambient temperature is less than 30 °C (86 °F).
If ambient temperature is 40 °C (104 °F), I_{2N} is 286 A.

2) Special 4-pole high-efficiency NEMA motor.

3) 50% overload is allowed for one minute every five minutes if ambient temperature is less than 30 °C (86 °F). 40% overload is allowed if ambient temperature is 40 °C (104 °F).

4) Available if ambient temperature is less than 30 °C (86 °F). If ambient temperature is 40 °C (104 °F), I_{2N} is 704 A.

5) These values are not calculated according to the ecodesign standard IEC 61800-9-2.

*) Higher value available if output frequency is above 41 Hz.

**) ACS800-U4 types only.

Symbols

I_{max} Maximum output current. Available for 10 s at start, otherwise as long as allowed by drive temperature.

Normal use (10% overload capability)

I_{2N} Continuous rms current. 10% overload is typically allowed for one minute every 5 minutes.

P_N Typical motor power. The power ratings apply to most 4-pole NEMA rated motors (230 V, 460 V or 575 V).

Heavy-duty use (50% overload capability)

I_{2hd} Continuous rms current. 50% overload is typically allowed for one minute every 5 minutes.

P_{hd} Typical motor power. The power ratings apply to most 4-pole NEMA rated motors (230 V, 460 V or 575 V).

Note: The ratings apply at ambient temperature of 40 °C (104 °F). At lower temperatures the ratings are higher.

Sizing

See page 102.

Derating

See page 102.

Fuses

UL class T or L fuses for branch circuit protection per NEC are listed below. Fast acting class T or faster fuses are recommended in the USA.

Check from the fuse time-current curve that the operating time of the fuse is below 0.1 seconds. The operating time depends on the supply network impedance and the cross-sectional area and length of the supply cable. The short-circuit current can be calculated as shown on page 103.

UL class T and L fuses

ACS800-U4 type	**Input current**	**Fuse**				
	A	A	V	Manufacturer	Type	UL class
Three-phase supply voltage 208 V, 220 V, 2**30 V**, 240 V						
-0080-2	201	250	600	Bussmann	JJS-250	T
-0100-2	239	300	600	Bussmann	JJS-300	T
-0120-2	285	400	600	Bussmann	JJS-400	T
-0140-2	391	500	600	Bussmann	JJS-500	T
-0170-2	428	600	600	Bussmann	JJS-600	T
-0210-2	506	600	600	Bussmann	JJS-600	T
-0230-2	599	800	600	Ferraz	A4BY800	L
-0260-2	677	800	600	Ferraz	A4BY800	L
-0300-2	707	900	600	Ferraz	A4BY900	L
Three-phase supply voltage 380 V, 400 V, 415 V, 440 V, **460 V**, 480 V or 500 V						
-0170-5	175	250	600	Bussmann	JJS-250	T
-0210-5	220	300	600	Bussmann	JJS-300	T
-0260-5	267	400	600	Bussmann	JJS-400	T
-0270-5	293	500	600	Bussmann	JJS-500	T
-0300-5	331	500	600	Bussmann	JJS-500	T
-0320-5	397	500	600	Bussmann	JJS-500	T
-0400-5	467	600	600	Bussmann	JJS-600	T
-0440-5	501	800	600	Ferraz	A4BY800	L
-0490-5	542	800	600	Ferraz	A4BY800	L
-0550-5	614	900	600	Ferraz	A4BY900	L
-0610-5	661	900	600	Ferraz	A4BY900	L
Three-phase supply voltage 525 V, **575 V** or 600 V						
-0140-7	117	200	600	Bussmann	JJS-200	T
-0170-7	146	200	600	Bussmann	JJS-200	T
-0210-7	184	250	600	Bussmann	JJS-250	T
-0260-7	199	300	600	Bussmann	JJS-300	T

ACS800-U4 type	Input current	Fuse				
	A	A	V	Manufacturer	Type	UL class
-0320-7	273	500	600	Bussmann	JJS-500	T
-0400-7	325	500	600	Bussmann	JJS-500	T
-0440-7	370	500	600	Bussmann	JJS-500	T
-0490-7	407	600	600	Bussmann	JJS-600	T
-0550-7	463	600	600	Bussmann	JJS-600	T
-0610-7	513	700	600	Ferraz	A4BY700	L

Note 1: See *Thermal overload and short-circuit protection* (page 46).

Note 2: In multi-cable installations, install only one fuse per phase (not one fuse per conductor).

Note 3: Larger fuses than the recommended ones must not be used.

Note 4: Fuses from other manufacturers can be used if they meet the ratings and the melting curve of the fuse does not exceed the melting curve of the fuse mentioned in the table.

00096931

Cable types

Cable sizing is based on NEC Table 310-16 for copper wires, 75 °C (167 °F) wire insulation at 40 °C (104 °F) ambient temperature. Not more than three current-carrying conductors in raceway or cable or earth (directly buried). For other conditions, dimension the cables according to local safety regulations, appropriate input voltage and the load current of the drive.

Copper cables with concentric copper shield	
Max. load current A	**Cable type** AWG/kcmil
57	6
75	4
88	3
101	2
114	1
132	1/0
154	2/0
176	3/0
202	4/0
224	250 MCM or 2 × 1
251	300 MCM or 2 × 1/0
273	350 MCM or 2 × 2/0
295	400 MCM or 2 × 2/0
334	500 MCM or 2 × 3/0
370	600 MCM or 2 × 4/0 or 3 × 1/0
405	700 MCM or 2 × 4/0 or 3 × 2/0
449	2 × 250 MCM or 3 × 2/0
502	2 × 300 MCM or 3 × 3/0
546	2 × 350 MCM or 3 × 4/0
590	2 × 400 MCM or 3 × 4/0
669	2 × 500 MCM or 3 × 250 MCM
739	2 × 600 MCM or 3 × 300 MCM
810	2 × 700 MCM or 3 × 350 MCM
884	3 × 400 MCM or 4 × 250 MCM
1003	3 × 500 MCM or 4 × 300 MCM
1109	3 × 600 MCM or 4 × 400 MCM
1214	3 × 700 MCM or 4 × 500 MCM

Cable Entries

Input, motor and brake resistor cable terminal sizes (per phase) and tightening torques are given below. Two-hole 1/2-inch diameter cable lugs can be used.

Frame size	Max. cable	U1, V1, W1, U2, V2, W2, UDC+/R+, UDC-, R-		Earthing PE	
		Screw	Tightening torque	Screw	Tightening torque
	kcmil/AWG		lbf ft		lbf ft
R7	2 × 250 MCM	1/2	37...55	3/8	22...32
R8	3 × 700 MCM	1/2	37...55	3/8	22...32

Dimensions, weights and noise

Frame size	UL type: open chassis				Weight	Noise
	Height	W1	W2	Depth		
	in.	in.	in.	in.	lb	dB
R7	44.13	13.15	16.36	18.31	220	71
R8	61.57	16.35	22.14	22.36	441	72

H height

W1 width of the basic unit with PE terminal (bookshelf)

W2 width with the cable connection terminal plates on the left side only (bookshelf)

D depth without fastening brackets
(R7 bookshelf: depth with fastening brackets is 20.32 in.)
(R8 bookshelf: depth with fastening brackets is 22.48 mm)

Package dimensions and weights

Frame size	ACS800-U4				ACS800-04M			
	Height	Width	Depth	Weight	Height	Width	Depth	Weight
	in.	in.	in.	lb	in.	in.	in.	lb
R7	23	49	22	55	33	49	22	68
R8	24	67	26	68	33	67	26	88

Input power connection

Voltage (U_1)	208/220/230/240 V AC 3-phase ± 10% for 230 V AC units 380/400/415 V AC 3-phase ± 10% for 400 V AC units 380/400/415/440/460/480/500 V AC 3-phase ± 10% for 500 V AC units 525/550/575/600/660/690 V AC 3-phase ± 10% for 690 V AC units
Rated conditional short-circuit current (IEC 60439-1)	65 kA when protected by fuses given in the fuse tables
Short-circuit current protection (UL 508C, CSA C22.2 No. 14-05)	US and Canada: The drive is suitable for use on a circuit capable of delivering not more than 100 kA symmetrical amperes (rms) at 600 V maximum when protected by fuses given in the *NEMA data* (page 114) fuse table.
Frequency	48 to 63 Hz, maximum rate of change 17%/s
Imbalance	Max. ± 3% of nominal phase to phase input voltage
Fundamental power factor (cos phi$_1$)	0.98 (at nominal load)

Motor connection

Voltage (U_2)

0 to U_1, 3-phase symmetrical, U_{max} at the field weakening point

Frequency

DTC mode: 0 to 3.2 · f_{FWP}. Maximum frequency 300 Hz (120 Hz with du/dt or sine filter).

$$f_{FWP} = \frac{U_{Nmains}}{U_{Nmotor}} \cdot f_{Nmotor}$$

f_{FWP}: frequency at field weakening point; U_{Nmains}: mains (input power) voltage
U_{Nmotor}: rated motor voltage; f_{Nmotor}: rated motor frequency

Frequency resolution

0.01 Hz

Current

See *IEC data* (page 99).

Power limit

1.5 · P_{hd}, 1.1 · P_N or $P_{cont.max}$ (whichever value is greatest)

Field weakening point

8 to 300 Hz

Switching frequency

3 kHz (average). In 690 V units 2 kHz (average).

Maximum recommended motor cable length

Type code (EMC equipment)	Max. motor cable length	
	DTC control	Scalar control
-	300 m (984 ft)	300 m (984 ft)
+E202 *, +E210 *	100 m (328 ft)	100 m (328 ft)

* Motor cable longer than 100 m (328 ft) is allowed but then the EMC Directive requirements may not be fulfilled.

Efficiency

Approximately 98% at nominal power level
The efficiency is not calculated according to the ecodesign standard IEC 61800-9-2.

Energy efficiency data (ecodesign)

Energy efficiency data according to IEC 61800-9-2 is available from the ecodesign tool (https://ecodesign.drivesmotors.abb.com).

Cooling

Method	Internal fan, flow direction from front to top
Free space around the unit	Refer to *ACS800-04/04M/U4 Cabinet Installation* [3AFE68360323 (English)].
Cooling air flow	See *IEC data* (page 99).

Degrees of protection

IP00 (UL type: open chassis)

Prevention of unexpected start-up (+Q950): AGPS-21 board

Nominal input voltage	115 V AC or 230 V AC
Input voltage range (selected by jumper)	95...132 V AC (X3 on), 185...265 V AC (X4 on, default)
Nominal frequency	50/60 Hz
Current	0.77 A at 115 V, 0.44 A at 230 V
Max. external fuse	16 A
Input connector X1	3 × 2.5 mm^2
User connector 1, 2, 3	600 V, 25 A, 0.5...4 mm^2 (20...12 AWG)
Output voltage	24 V ± 0.5 V
Nominal output current	1.7 A (50 °C, 122 °F)
X2 terminal block type	JST B3P-VH
Ambient temperature	0...50 °C (32...122 °F)
Relative humidity	30...90%, no condensation allowed
Approvals	CE, C-UL US listed

Safe torque off (+Q967): ASTO-21 board

Nominal input voltage	24 V DC
Nominal input current	40 mA (20 mA per channel)
X1 terminal sizes	4 x 2.5 mm^2
Nominal output current	0.4 A
X2 terminal block type	JST B4P-VH
Ambient temperature	0...50 °C (32...122 °F)
Relative humidity	Max. 90%, no condensation allowed

Ambient conditions

Environmental limits for the drive are given below. The drive is to be used in a heated, indoor, controlled environment.

	Operation installed for stationary use	**Storage** in the protective package	**Transportation** in the protective package
Installation site altitude	0 to 4000 m (13 123 ft) above sea level [above 1000 m (3281 ft), see *Derating* (page 102)]. Modules with option +Q967: 0 to 2000 m (6562 ft)	-	-
Air temperature	-15 to +50 °C (5 to 122 °F). No frost allowed. See *Derating* (page 102).	-40 to +70 °C (-40 to +158 °F)	-40 to +70 °C (-40 to +158 °F)
Relative humidity	5 to 95%	Max. 95%	Max. 95%
	No condensation allowed. Maximum allowed relative humidity is 60% in the presence of corrosive gases.		
Contamination levels (IEC 60721-3-3, IEC 60721-3-2, IEC 60721-3-1)	No conductive dust allowed.		
	Boards without coating: Chemical gases: Class 3C1 Solid particles: Class 3S2 **Boards with coating:** Chemical gases: Class 3C2 Solid particles: Class 3S2	**Boards without coating:** Chemical gases: Class 1C2 Solid particles: Class 1S3 **Boards with coating:** Chemical gases: Class 1C2 Solid particles: Class 1S3	**Boards without coating:** Chemical gases: Class 2C2 Solid particles: Class 2S2 **Boards with coating:** Chemical gases: Class 2C2 Solid particles: Class 2S2
Atmospheric pressure	70 to 106 kPa 0.7 to 1.05 atmospheres	70 to 106 kPa 0.7 to 1.05 atmospheres	60 to 106 kPa 0.6 to 1.05 atmospheres

Vibration (IEC 60068-2)	Max. 1 mm (0.04 in.) (5 to 13.2 Hz), max. 7 m/s^2 (23 ft/s^2) (13.2 to 100 Hz) sinusoidal	Max. 1 mm (0.04 in.) (5 to 13.2 Hz), max. 7 m/s^2 (23 ft/s^2) (13.2 to 100 Hz) sinusoidal	Max. 3.5 mm (0.14 in.) (2 to 9 Hz), max. 15 m/s^2 (49 ft/s^2) (9 to 200 Hz) sinusoidal
Shock (IEC 60068-2-27)	Not allowed	Max. 100 m/s^2 (330 ft./s^2), 11 ms	Max. 100 m/s^2 (330 ft./s^2), 11 ms
Free fall	Not allowed	100 mm (4 in.) for weight over 100 kg (220 lb)	100 mm (4 in.) for weight over 100 kg (220 lb)

Materials

Drive enclosure

- PC/ABS 2.5 mm, color NCS 1502-Y (RAL 9002 / PMS 420 C)
- hot-dip zinc coated steel sheet 1.5 to 2.5 mm, thickness of coating 100 micrometers, color NCS 1502-Y

Package

Plywood and wood. Plastic covering of the package: PE-LD, bands PP or steel.

Disposal

The main parts of the drive can be recycled to preserve natural resources and energy. Product parts and materials should be dismantled and separated.

Generally all metals, such as steel, aluminum, copper and its alloys, and precious metals can be recycled as material. Plastics, rubber, cardboard and other packaging material can be used in energy recovery. Printed circuit boards and DC capacitors (C1-1 to C1-x) need selective treatment according to IEC 62635 guidelines. To aid recycling, plastic parts are marked with an appropriate identification code.

Contact your local ABB distributor for further information on environmental aspects and recycling instructions for professional recyclers. End of life treatment must follow international and local regulations.

Applicable standards

The drive complies with these standards:

• EN/IEC 60204-1:2018	*Safety of machinery. Electrical equipment of machines. Part 1: General requirements. Provisions for compliance:* The final assembler of the machine is responsible for installing - an emergency-stop device - a supply disconnecting device - the ACS800-04/04M/U4 into a cabinet.
• EN 60529:1991 (IEC 529) + corrigendum May 1993 + A1:2000	*Degrees of protection provided by enclosures (IP code)*
• IEC 60664-1:2007	*Insulation coordination for equipment within low-voltage systems. Part 1: Principles, requirements and tests.*
• EN 61800-3:2004	*Adjustable speed electrical power drive systems. Part 3: EMC requirements and specific test methods*
• EN 61800-5-1:2007 +A1:2017	*Adjustable speed electrical power drive systems. Part 5-1: Safety requirements – electrical, thermal and energy*
• UL 508C (2002)	*UL Standard for Safety, Power Conversion Equipment, second edition*
• CSA C22.2 No. 274-17	*Adjustable speed drives*

CE marking

A CE mark is attached to the drive to verify that the unit follows the provisions of the European Low Voltage and EMC Directives. The CE marking also verifies that the drive, in regard to its safety functions (such as Safe torque off), conforms with the Machinery Directive as a safety component.

Compliance with the European Low Voltage Directive

The compliance with the European Low Voltage Directive was verified according to standards EN/IEC 60204-1 and EN 50178.

Compliance with the European EMC Directive

The EMC Directive defines the requirements for immunity and emissions of electrical equipment used within the European Union. The EMC product standard (EN 61800-3:2004) covers requirements stated for drives. See *Compliance with EN 61800-3:2004* (page 125).

Compliance with the European Machinery Directive

The drive is an electronic product which is covered by the European Low Voltage Directive. However, the drive can be equipped with the Safe torque off function and other safety functions for machinery which, as safety components, are in the scope of the Machinery Directive. These functions of the drive comply with European harmonized standards such as EN 61800-5-2. The declaration of conformity for each function is in the appropriate function-specific manual.

Compliance with EN 61800-3:2004

Definitions

EMC stands for **E**lectro**m**agnetic **C**ompatibility. It is the ability of electrical/electronic equipment to operate without problems within an electromagnetic environment. Likewise, the equipment must not disturb or interfere with any other product or system within its locality.

First environment includes establishments connected to a low-voltage network which supplies buildings used for domestic purposes.

Second environment includes establishments connected to a network not supplying domestic premises.

Drive of category C2: drive of rated voltage less than 1000 V and intended to be installed and commissioned only by a professional when used in the first environment. **Note:** A professional is a person or organization having necessary skills in installing and/or commissioning power drive systems, including their EMC aspects.

Drive of category C3: drive of rated voltage less than 1000 V and intended for use in the second environment and not intended for use in the first environment.

Drive of category C4: drive of rated voltage equal to or above 1000 V, or rated current equal to or above 400 A, or intended for use in complex systems in the second environment.

First environment (drive of category C2)

The drive complies with the standard with the following provisions:

1. The drive has EMC filter +E202.
2. The motor and control cables are selected as specified in the hardware manual.
3. The drive is installed according to the instructions given in the hardware manual.
4. Maximum cable length is 100 m.

WARNING! The drive can cause radio interference if it is used in a residential or domestic environment. The user is required to take measures to prevent interference, in addition to the requirements for CE compliance listed above, if necessary.

WARNING! Do not install a drive with EMC filter +E202 on IT (unearthed) systems. The supply network becomes connected to earth potential through the EMC filter capacitors which can cause danger or damage the unit.

Second environment (drive of category C3)

The drive complies with the standard with the following provisions:

1. The drive has EMC filter +E210. The filter is suitable for TN (earthed) and IT (unearthed) systems.
2. The motor and control cables are selected as specified in the hardware manual.
3. The drive is installed according to the instructions given in the hardware manual.
4. Maximum cable length is 100 m.

WARNING! A drive of category C3 is not intended to be used on a low-voltage public network which supplies domestic premises. Radio frequency interference is expected if the drive is used on such a network.

Second environment (drive of category C4)

If the provisions under *Second environment (drive of category C3)* (page 126) cannot be met, for example, the drive cannot be equipped with EMC filter +E200 when installed to an IT (unearthed) network, the requirements of the standard can be met as follows:

1. It is ensured that no excessive emission is propagated to neighboring low-voltage networks. In some cases, the inherent suppression in transformers and cables is sufficient. If in doubt, a supply transformer with static screening between the primary and secondary windings can be used.

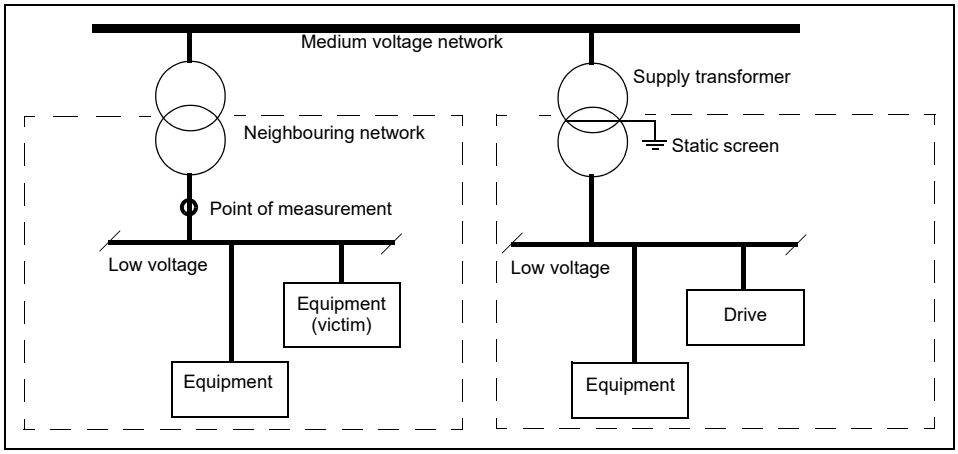

2. An EMC plan for preventing disturbances is drawn up for the installation. A template is available from the local ABB representative.
3. The motor and control cables are selected as specified in the hardware manual.
4. The drive is installed according to the instructions given in the hardware manual.

WARNING! A drive of category C4 is not intended to be used on a low-voltage public network which supplies domestic premises. Radio frequency interference is expected if the drive is used on such a network.

“C-tick” marking

A “C-tick” mark is attached to each drive in order to verify compliance with the EMC product standard (EN 61800-3:2004), required under the Trans-Tasman Electromagnetic Compatibility Scheme for levels 1, 2 and 3 in Australia and New Zealand. See *Compliance with EN 61800-3:2004* (page 125).

UL/CSA markings

The ACS800-04, ACS800-U4 and ACS800-04M are C-UL US listed and CSA marked. The approval is valid with rated voltages (up to 600 V).

UL checklist

- The drive is to be used in a heated, indoor controlled environment. The drive must be installed in clean air according to enclosure classification. Cooling air must be clean, free from corrosive materials and electrically conductive dust. See *Ambient conditions* (page 122) for specific limits.
- The maximum ambient air temperature is 40 °C (104 °F) at rated current. The current is derated for 40 to 50 °C (104 to 122 °F).
- The drive is suitable for use on a circuit capable of delivering not more than 100 kA rms symmetrical amperes at the drive nominal voltage (600 V maximum for 690 V units) when protected by fuses given in the *NEMA data* (page 114) fuse table. The ampere rating is based on tests done according to UL 508C.
- The cables located within the motor circuit must be rated for at least 75 °C (167 °F) in UL-compliant installations.
- The input cable must be protected with fuses. Circuit breakers must not be used without fuses in the USA. Suitable IEC (class aR) fuses and UL (class T) fuses are listed in this hardware manual.
- For installation in the United States, branch circuit protection must be provided in accordance with the National Electrical Code (NEC) and any applicable local codes. To fulfill this requirement, use the UL classified fuses.
- For installation in Canada, branch circuit protection must be provided in accordance with the Canadian Electrical Code and any applicable provincial codes. To fulfill this requirement, use the UL classified fuses.
- The drive provides overload protection in accordance with the National Electrical Code (NEC). See the firmware manual for setting. Default setting is off, must be activated at start-up.
- Brake chopper: ABB has brake choppers that, when applied with appropriately sized brake resistors, allow the drive to dissipate regenerative energy (normally associated with quickly decelerating a motor). Proper application of the brake chopper is defined in *Resistor braking* (page 131).

Disclaimer

The manufacturer shall have no obligation with respect to any product which (i) has been improperly repaired or altered; (ii) has been subjected to misuse, negligence or accident; (iii) has been used in a manner contrary to the manufacturer's instructions; or (iv) has failed as a result of ordinary wear and tear.

Cybersecurity disclaimer

This product can be connected to and communicate information and data via a network interface. The HTTP protocol, which is used between the commissioning tool (Drive Composer) and the product, is an unsecured protocol. For independent and continuous operation of a product, such connection via a network to the commissioning tool is not necessary. However, it is the Customer's sole

responsibility to provide and continuously ensure a secure connection between the product and the Customer network or any other network (as the case may be).

Customer shall establish and maintain any appropriate measures (such as but not limited to the installation of firewalls, prevention of physical access, application of authentication measures, encryption of data, installation of anti-virus programs, and so on) to protect the product, the network, its system and the interface against any kind of security breaches, unauthorized access, interference, intrusion, leakage and/or theft of data or information. Notwithstanding any other provision to the contrary and regardless of whether the contract is terminated or not, ABB and its affiliates are under no circumstances liable for damages and/or losses related to such security breaches, any unauthorized access, interference, intrusion, leakage and/or theft of data or information.

12

Resistor braking

What this chapter contains

This chapter describes how to select, protect and wire brake choppers and resistors. The chapter also contains the technical data.

Availability of brake choppers and resistors for the ACS800

Brake choppers are optionally available as built-in units, indicated in the type code by +D150.

Resistors are available as add-on kits.

How to select the correct drive/chopper/resistor combination

1. Calculate the maximum power *(P_{max})* generated by the motor during braking.
2. Select a suitable drive / brake chopper / brake resistor combination for the application according to the following tables (take account of other factors in the drive selection also). The following condition must be met:

   $P_{brcont} \geq P_{max}$

   where

   P_{br} denotes P_{br5}, P_{br10}, P_{br30}, P_{br60}, or P_{brcont} depending on the duty cycle.

3. Check the resistor selection. The energy generated by the motor during a 400-second period must not exceed the resistor heat dissipation capacity E_R.
   If the E_R value is not sufficient, it is possible to use a four-resistor assembly in which two standard resistors are connected in parallel, two in series. The E_R value of the four-resistor assembly is four times the value specified for the standard resistor.

A resistor other than the standard resistor can be used provided that:

- its resistance is not lower than the resistance of the standard resistor.

WARNING! Never use a brake resistor with a resistance below the value specified for the particular drive / brake chopper / resistor combination. The drive and the chopper are not able to handle the overcurrent caused by the low resistance.

- the resistance does not restrict the braking capacity needed, that is,

  $$P_{max} < \frac{U_{DC}^2}{R}$$

  where

  P_{max} maximum power generated by the motor during braking

  U_{DC} voltage over the resistor during braking, for example,
  1.35 · 1.2 · 415 V DC (when supply voltage is 380 to 415 V AC),
  1.35 · 1.2 · 500 V DC. (when supply voltage is 440 to 500 V AC) or
  1.35 · 1.2 · 690 V DC (when supply voltage is 525 to 690 V AC).

  R resistor resistance (ohm)

- the heat dissipation capacity *(E_R)* is sufficient for the application (see step 3 above).

Optional brake chopper and resistor(s) for the ACS800-04/04M/U4

The nominal ratings for dimensioning the brake resistors are given below at an ambient temperature of 40 °C (104 °F).

ACS800-04 type	Frame size	Braking power of the chopper and the drive				Brake resistor(s)			
		5/60 s P_{br5} (kW)	10/60 s P_{br10} (kW)	30/60 s P_{br30} (kW)	P_{brcont} (kW)	Type	R (ohm)	E_R (kJ)	P_{Rcont} (kW)
230 V units									
-0080-2	R7	68	68	68	54	SAFUR160F380	1.78	3600	9
-0100-2	R7	83	83	83	54	SAFUR160F380	1.78	3600	9
-0120-2	R7	105	67	60	40	2xSAFUR200F500	1.35	10800	27
-0140-2	R8	135	135	135	84	2xSAFUR160F380	0.89	7200	18
-0170-2	R8	135	135	135	84	2xSAFUR160F380	0.89	7200	18
-0210-2	R8	165	165	165	98	2xSAFUR160F380	0.89	7200	18
-0230-2	R8	165	165	165	113	2xSAFUR160F380	0.89	7200	18
-0260-2	R8	223	170	125	64	4xSAFUR160F380	0.45	14400	36
-0300-2	R8	223	170	125	64	4xSAFUR160F380	0.45	14400	36
400 V units									
-0140-3	R7	135	135	100	80	SAFUR200F500	2.70	5400	13.5
-0170-3	R7	165	150	100	80	SAFUR200F500	2.70	5400	13.5
-0210-3	R7	165	150	100	80	SAFUR200F500	2.70	5400	13.5
-0260-3	R8	240	240	240	173	2XSAFUR210F575	1.70	8400	21
-0320-3	R8	300	300	300	143	2xSAFUR200F500	1.35	10800	27
-0400-3	R8	375	375	273	130	4xSAFUR125F500	1.00	14400	36
-0440-3	R8	473	355	237	120	4xSAFUR210F575	0.85	16800	42
-0490-3	R8	500	355	237	120	4xSAFUR210F575	0.85	16800	42
500 V units									
-0170-5	R7	165	132 [2]	120	80	SAFUR200F500	2.70	5400	13.5
-0210-5	R7	198	132 [2]	120	80	SAFUR200F500	2.70	5400	13.5
-0260-5	R7	198 [1]	132 [2]	120	80	SAFUR200F500	2.70	5400	13.5
-0270-5*	R8	240	240	240	240	2xSAFUR125F500	2.00	7200	18
-0300-5*	R8	280	280	280	280	2xSAFUR125F500	2.00	7200	18
-0320-5	R8	300	300	300	300	2xSAFUR125F500	2.00	7200	18
-0400-5	R8	375	375	375	234	2XSAFUR210F575	1.70	8400	21
-0440-5	R8	473	473	450	195	2xSAFUR200F500	1.35	10800	27
-0490-5	R8	480	480	470	210	2xSAFUR200F500	1.35	10800	27
-0550-5	R8	600	400 [4]	300	170	4xSAFUR125F500	1.00	14400	36
-0610-5	R8	600 [3]	400 [4]	300	170	4xSAFUR125F500	1.00	14400	36

ACS800-04 type	Frame size	Braking power of the chopper and the drive				Brake resistor(s)			
		5/60 s P_{br5} (kW)	10/60 s P_{br10} (kW)	30/60 s P_{br30} (kW)	P_{brcont} (kW)	Type	R (ohm)	E_R (kJ)	P_{Rcont} (kW)
690 V units									
-0140-7	R7	125 5)	110	90	75	SAFUR80F500	6.00	2400	6
-0170-7	R7	125 6)	110	90	75	SAFUR80F500	6.00	2400	6
-0210-7	R7	125 6)	110	90	75	SAFUR80F500	6.00	2400	6
-0260-7	R7	135 7)	120	100	80	SAFUR80F500	6.00	2400	6
-0320-7	R8	300	300	300	260	SAFUR200F500	2.70	5400	13.5
-0400-7	R8	375	375	375	375	SAFUR200F500	2.70	5400	13.5
-0440-7	R8	430	430	430	385	SAFUR200F500	2.70	5400	13.5
-0490-7	R8	550	400	315	225	2xSAFUR125F500	2.00	7200	18
-0550-7	R8	550	400	315	225	2xSAFUR125F500	2.00	7200	18
-0610-7	R8	550	400	315	225	2xSAFUR125F500	2.00	7200	18

00096931

P_{br5} Maximum braking power of the drive with the specified resistor(s). The drive and the chopper withstand this braking power for 5 seconds per minute.

P_{br10} The drive and the chopper withstand this braking power for 10 seconds per minute.

P_{br30} The drive and the chopper withstand this braking power for 30 seconds per minute.

P_{brcont} The drive and the chopper withstand this continuous braking power. The braking is considered continuous if the braking time exceeds 30 s.

Note: Make sure that the braking energy transmitted to the specified resistor(s) in 400 seconds does not exceed E_R.

R Resistance value for the resistor assembly.
Note: This is also the minimum allowed resistance for the brake resistor.

E_R Short energy pulse that the resistor assembly withstands every 400 seconds. This energy heats the resistor element from 40 °C (104 °F) to the maximum allowable temperature.

P_{Rcont} Continuous power (heat) dissipation of the resistor when placed correctly. Energy E_R dissipates in 400 seconds.

* ACS800-Ux types only

1) 240 kW possible if ambient temperature is below 33 °C (91 °F)

2) 160 kW possible if ambient temperature is below 33 °C (91 °F)

3) 630 kW possible if ambient temperature is below 33 °C (91 °F)

4) 450 kW possible if ambient temperature is below 33 °C (91 °F)

5) 135 kW possible if ambient temperature is below 33 °C (91 °F)

6) 148 kW possible if ambient temperature is below 33 °C (91 °F)

7) 160 kW possible if ambient temperature is below 33 °C (91 °F)

Combined braking cycles for R7:

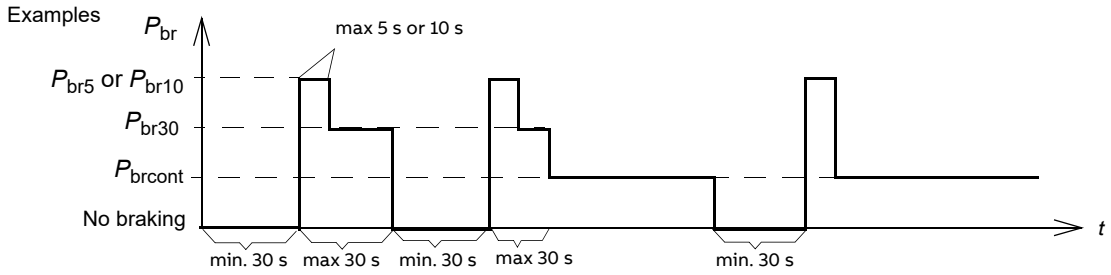

- After P_{br5}, P_{br10} or P_{br30} braking, the drive and the chopper withstand P_{brcont} continuously.
- P_{br5}, P_{br10} or P_{br30} braking is allowed once every minute.
- After P_{brcont} braking, there has to be a pause of at least 30 seconds without any braking if the subsequent braking power is greater than P_{brcont}.
- After P_{br5} or P_{br10} braking, the drive and the chopper withstand P_{br30} within a total braking time of 30 seconds.
- P_{br10} braking is not acceptable after P_{br5} braking.

Combined braking cycles for R8:

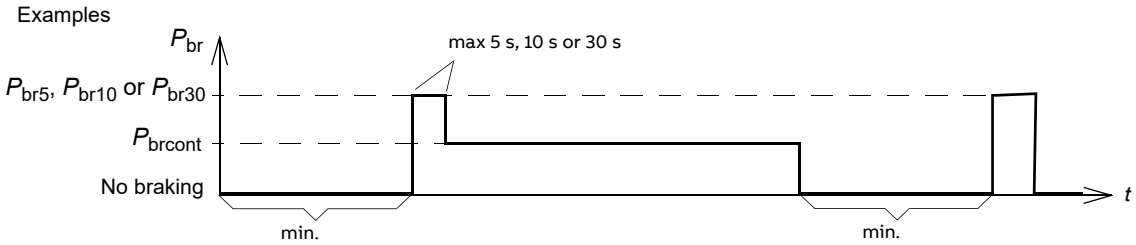

- After P_{br5}, P_{br10} or P_{br30} braking, the drive and the chopper withstand P_{brcont} continuously. (P_{brcont} is the only allowed braking power after P_{br5}, P_{br10} or P_{br30}.)
- P_{br5}, P_{br10} or P_{br30} braking is allowed once every minute.
- After P_{brcont} braking, there has to be a pause of at least 60 seconds without any braking if the subsequent braking power is greater than P_{brcont}.

All brake resistors must be installed outside the drive module. The resistors are built in an IP00 metal frame. The 2xSAFUR and 4xSAFUR resistors are connected in parallel.
Note: The SAFUR resistors are not UL listed.

Resistor installation and wiring

All resistors must be installed outside of the drive module in a place where they will cool.

WARNING! The materials near the brake resistor must be non-flammable. The surface temperature of the resistor is high. Air flowing from the resistor is of hundreds of degrees Celsius. Protect the resistor against contact.

Use the cable type used for drive input cabling (see *Technical data* on page 99) to ensure the input fuses also protect the resistor cable. Alternatively, two-conductor shielded cable with the same cross-sectional area can be used. The maximum length of the resistor cable(s) is 10 m (33 ft). For the connections, see the power connection diagram of the drive.

Protection of frame sizes R7 and R8

A main contactor is not required for protecting against resistor overheating when the resistor is dimensioned according to the instructions and the internal brake chopper is in use. The drive disables power flow through the input bridge if the chopper remains conductive in a fault situation.
Note: If an external brake chopper (outside the drive module) is used, a main contactor is always required.

A thermal switch (standard in ABB resistors) is required for safety reasons. The cable must be shielded and not longer than the resistor cable.

With Standard Control Program, wire the thermal switch as shown below. By default, the drive coasts to a stop when the switch opens.

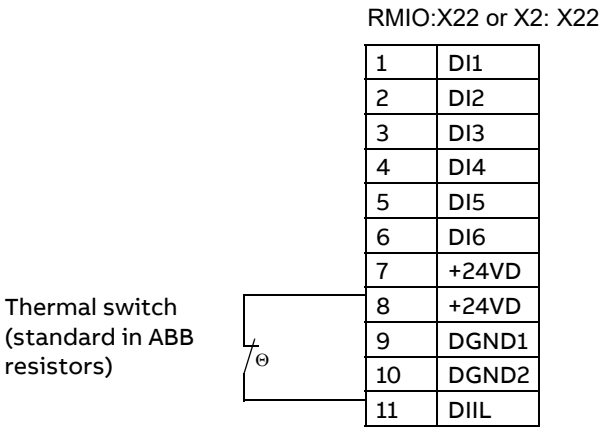

For other control programs, the thermal switch can be wired to a different digital input. Programming of the input to trip the drive by “EXTERNAL FAULT” may be needed. See the appropriate firmware manual.

Brake circuit commissioning

For Standard Control Program:

- Enable the brake chopper function (parameter 27.01).
- Switch off the overvoltage control of the drive (parameter 20.05).
- Check the resistance value setting (parameter 27.03).
- Check the setting of parameter 21.09. If stop by coasting is required, select OFF2 STOP.

For the use of the brake resistor overload protection (parameters 27.02...27.05), consult an ABB representative.

WARNING! If the drive has a brake chopper but the chopper is not enabled by a parameter setting, disconnect the brake resistor because the protection against resistor overheating is not in use.

For settings of other control programs, see the appropriate firmware manual.

Note: Some brake resistors are coated with oil film for protection. At the start-up, the coating burns off and produces a little bit of smoke. Ensure proper ventilation at the start-up.

13

Non-ABB d*u*/d*t* filter selection

What this chapter contains

This chapter contains guidelines for selecting and installing a non-ABB d*u*/d*t* filter with the drive.

When a d*u*/d*t* filter must be used

A d*u*/d*t* filter must be used with drives of voltages from 500 V to 690 V according to the *Requirements table* on page 40.

Filter and installation requirements

1. The filter is an LCR filter or an L filter (a series inductor: three single-phase inductors or one three-phase inductor).
   Make sure that the approximate per-phase impedance of the filter inductor is 1.5% for drives of frame size R7 and 2% for drives of frame size R8 when calculated as follows:

$$Z_L = 2 \cdot \pi \cdot f_N \cdot L \cdot \frac{\sqrt{3} \cdot I_N}{U_N} \cdot 100$$

   where

   Z_L ≙ impedance of the inductor divided by the nominal phase impedance of the motor, in percentage
   L ≙ per-phase inductance of the filter
   f_N ≙ rated motor frequency
   I_N ≙ rated motor current
   U_N ≙ rated motor voltage.

Note: Impedances over 1.5% or 2% can be used, but then the voltage drop across the filter will be increased, thus reducing the pull-out torque and attainable power.

2. The du/dt value of the inverter output voltage is approximately 5 kV / microsecond. The filter limits the du/dt value at the motor terminals to less than 1 kV / microsecond.
3. The filter withstands the continuous current of the drive ($I_{cont.max}$). Saturation of the filter core is not allowed up to the maximum output current of the drive (I_{max}).
4. The filter is dimensioned thermally to withstand a switching frequency of 2 kHz with 690 V units, and 3 kHz with 500 V units.
5. The cable between the drive and the filter is shorter than the maximum length specified by the filter manufacturer.
6. The motor cable does not exceed the maximum length specified by the filter manufacturer and the hardware manual.
7. Maximum output frequency does not exceed the limit specified by the filter manufacturer and 300 Hz specified by the drive.

14

RDCO-01/02/03/04 DDCS communication option modules

What this chapter contains

This chapter contains a description of the RDCO-0x DDCS communication option modules connections and the technical specifications of the RDCO-0x modules.

Overview

The RDCO-0x DDCS Communication options are add-on modules for the

- RMIO Motor Control and I/O board (also part of RDCU control units)
- BCU control units.

RDCO modules are available factory-installed as well as retrofit kits.

The RDCO module includes the connectors for fiber-optic DDCS channels CH0, CH1, CH2 and CH3. The usage of these channels is determined by the application program; see the *Firmware Manual* of the drive. However, the channels are normally assigned as follows:

CH0 – overriding system (for example, fieldbus adapter)

CH1 – I/O options and supply unit

CH2 – Master/Follower link

CH3 – PC tool (ACS800 only).

There are several types of the RDCO. The difference between the types is the optical components. In addition, each type is available with a coated circuit board, this being indicated by a “**C**” suffix, for example, RDCO-03C.

Module type	Optical component type			
	CH0	**CH1**	**CH2**	**CH3**
RDCO-01(C)	10 MBd	5 MBd	10 MBd	10 MBd
RDCO-02(C)	5 MBd	5 MBd	10 MBd	10 MBd
RDCO-03(C)	5 MBd	5 MBd	5 MBd	5 MBd
RDCO-04(C)	10 MBd	10 MBd	10 MBd	10 MBd

The optical components at both ends of a fiber optic link must be of the same type for the light intensity and receiver sensitivity levels to match. Plastic optical fiber (POF) cables can be used with both 5 MBd and 10 MBd optical components. 10 MBd components also enable the use of Hard Clad Silica (HCS) cables, which allow longer connection distances thanks to their lower attenuation.

Note: The optical component type does not reflect the actual communication speed.

Delivery check

The option package:

- RDCO-0x module
- Two screws (M3×8)
- This document.

Module layout

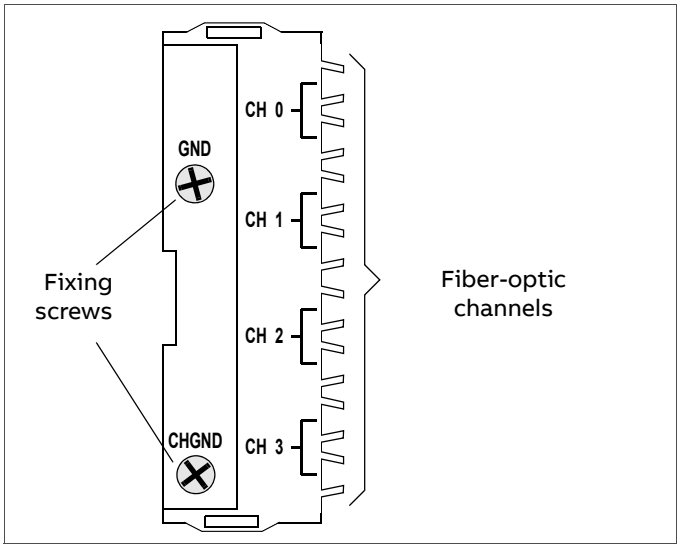

Installation

WARNING! All electrical installation and maintenance work on the drive should be carried out by qualified electricians only.
The drive and adjoining equipment must be properly earthed.

Do not work on a powered drive. Before installation, switch off the mains and other dangerous voltages (for example, from external control circuits) to the drive. After switching off the mains, always allow the intermediate circuit capacitors 5 minutes to discharge before starting work on the frequency converter. It is a good practice to check (with a voltage indicating instrument) that the drive is in fact discharged before beginning work.
There may be dangerous voltages inside the drive from external control circuits even when the drive mains power is shut off. Exercise appropriate care when working on the unit. Neglecting these instructions may cause physical injury or death.

WARNING! The component boards of the drive have integrated circuits that are extremely sensitive to electrostatic discharge (ESD). Wear an earthing wrist band when handling component boards. Do not touch the boards unnecessarily. Do not remove any board from its anti-static packaging until required.

WARNING! Handle the fiber optic cables with care. The maximum long term tensile load is 1 N; the minimum short term bend radius is 35 mm. Do not touch the ends of the fibers with bare hands as the fiber is extremely sensitive to dirt.
Use rubber grommets at cable entries to protect the cables.

The RDCO-0x module is to be inserted into the position marked “DDCS” on the drive. On installation, the signal and power connection to the drive is automatically made through a 20-pin connector.

The module is held in place with plastic retaining clips and two screws. The screws also provide the earthing of module, and interconnect the GND signals of the module and the control board.

Installation procedure

1. Access the optional module slots on the drive. Whenever necessary, refer to the *Hardware Manual* of the drive for instructions on removing any covers.
2. Insert the module carefully into the slot marked with “DDCS” (BCU control unit slot 4) on the control board until the retaining clips lock the module into position.
3. Fasten the screws included in the package. Note that correct installation of the screws is essential for fulfilling the EMC requirements and for proper operation of the module.
4. Lead the fiber optic cables from the external device to the appropriate channel(s) of the RDCO. Inside the drive, route the cables as shown in its *Hardware Manual*. Make sure the cables are not kinked or laid against sharp edges. Observe color coding so that transmitters are connected to receivers and

vice versa. In case multiple devices are to be connected to one channel, they must be connected in a ring.

Technical data

Module types: RDCO-01(C), RDCO-02(C), RDCO-03(C), RDCO-04(C)

Degree of protection: IP 20

Ambient conditions: The applicable ambient conditions specified for the drive in its *Hardware Manual* are in effect.

Connectors:
- 20-pin pinheader
- 4 transmitter/receiver connector pairs for fiber optic cable. Type: Agilent Technologies Versatile Link. Communication speed: 1, 2 or 4 Mbit/s

Operating voltage: +5 V DC ±10%, supplied by the control unit of the drive.

Current consumption: 200 mA max.

Electromagnetic immunity: IEC 1000-4-2 (limits: industrial, second environment); IEC 1000-4-3; IEC 1000-4-4; IEC 1000-4-6

Electromagnetic emissions: EN 50081-2; CISPR 11

Dimensions (mm):

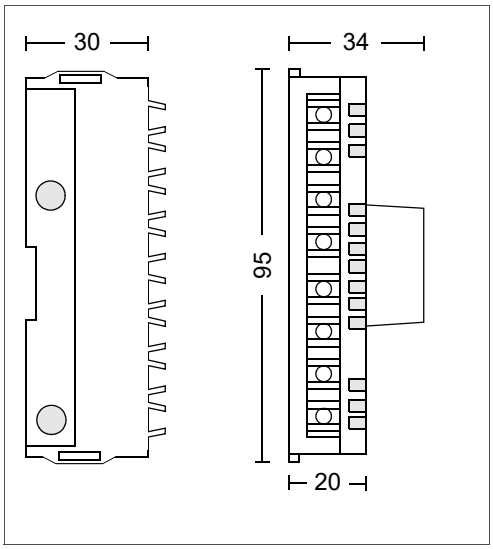

Further information

Product and service inquiries

Address any inquiries about the product to your local ABB representative, quoting the type designation and serial number of the unit in question. A listing of ABB sales, support and service contacts can be found by navigating to abb.com/searchchannels.

Product training

For information on ABB product training, navigate to new.abb.com/service/training.

Providing feedback on ABB Drives manuals

Your comments on our manuals are welcome. Navigate to new.abb.com/drives/manuals-feedback-form.

Document library on the Internet

You can find manuals and other product documents in PDF format on the Internet at abb.com/drives/documents.

abb.com/drives

3AFE64671006H

© Copyright 2023 ABB. All rights reserved.
Specifications subject to change without notice.

3AFE64671006 Rev H (EN) 2023-12-01