ABB DRIVES

ACS580-01…, ACH580-01… and ACQ580-01… +C135 drives with flange mounting kit

Supplement

ACS580-01…, ACH580-01… and ACQ580-01… +C135 drives with flange mounting kit

Supplement

Table of contents

4. Mechanical installation – Frames R1…R3

5. Mechanical installation – Frames R1…R3 +B063 +B066

6. Mechanical installation – Frames R4 and R5

7. Mechanical installation – Frames R6…R9

3AXD50000349821 Rev C
EN
Original instructions
EFFECTIVE: 2023-12-19

Table of contents

1 Introduction to the supplement

Contents of this chapter 9
Applicability 9
Target audience 9
Purpose of the supplement 9
Related documents 10

2 Hardware description

Contents of this chapter 11
Product overview 11
Layout and mounting position 11
Example: tilted position, frames R1…R3 12
Example: upright position, frames R4 to R9 13
Degree of protection 13
Special requirements 14
Ordering codes 14

3 Mechanical installation – General

Contents of this chapter 15
Safety instructions 15
Examining the installation site 15
Free space requirements 16
Additional requirements for cabinet installations 18
Necessary tools 18
Unpacking and examining the delivery 18

4 Mechanical installation – Frames R1…R3

Contents of this chapter 19
Flange mounting kit package contents 20
Mounting template 21
Installation procedure 22
Optional steps 27
Installation of the grounding plate 27
Installation of the power cable grounding shelf lower on the bottom bracket 29
Installing the drive on the mounting plate 31

5 Mechanical installation – Frames R1...R3 +B063 +B066

Contents of this chapter 35
Flange mounting kit package contents 36
Back hood 37
Mounting template 38
Installation procedure 39
Installing the drive on the mounting plate 40
Installing the back hood 43

6 Mechanical installation – Frames R4 and R5

Contents of this chapter 45
Flange mounting kit package contents 46
Mounting template 47
Installation procedure 48
Installing the drive on the mounting plate 54

7 Mechanical installation – Frames R6...R9

Contents of this chapter 57
Safety 57
Flange mounting kit package contents 58
Mounting template 59
Installation procedure 60
Installing the drive on the mounting plate 62

8 Dimension drawings

Contents of this chapter 65
Frame R1 66
Attaching points and hole dimensions 68
Frame R1 (options +B063 and +B066) 69
Attaching points and hole dimensions 70
Frame R2 71
Attaching points and hole dimensions 73
Frame R2 (options +B063 and +B066) 74
Attaching points and hole dimensions 75
Frame R3 76
Attaching points and hole dimensions 78
Frame R3 (options +B063 and +B066) 79
Attaching points and hole dimensions 80
Frame R4 81
Attaching points and hole dimensions 83
Frame R5 84
Attaching points and hole dimensions 86

Frame R6 87
Attaching points and hole dimensions 89
Frame R7 90
Attaching points and hole dimensions 92
Frame R8 93
Attaching points and hole dimensions 95
Frame R9 96
Attaching points and hole dimensions 98

Further information

1

Introduction to the supplement

Contents of this chapter

This chapter describes the supplement.

Applicability

This supplement is applicable to ACS580-01, ACH580-01 and ACQ580-01 drives with the flange mounting kit (option +C135).

Target audience

This supplement is intended for people who plan the installation and install the drive with the flange mounting kit. Read the supplement before you work on the drive. You are expected to know the fundamentals of electricity, wiring, electrical components and electrical schematic symbols.

The supplement is written for readers worldwide. Both SI and imperial units are shown.

Purpose of the supplement

This supplement tells you how to install the drive mechanically onto an opening in a mounting plate with the flange mounting kit.

Related documents

You can find manuals on the Internet. See below for the relevant code/link. For more documentation, go to www.abb.com/drives/documents.

ACH580-01 manuals	ACQ580-01 manuals	ACS580-01 manuals

2

Hardware description

Contents of this chapter

This chapter describes the flange mounting kit.

Product overview

The flange mounting kit contains brackets to attach the drive onto a mounting plate. The heatsink of the drive can be located in the cooling air channel, and the front part of the drive on the other side of the mounting plate.

Layout and mounting position

You can install the flange-mounted drive in a tilted or an upright position depending on the drive type.

Example: tilted position, frames R1…R3

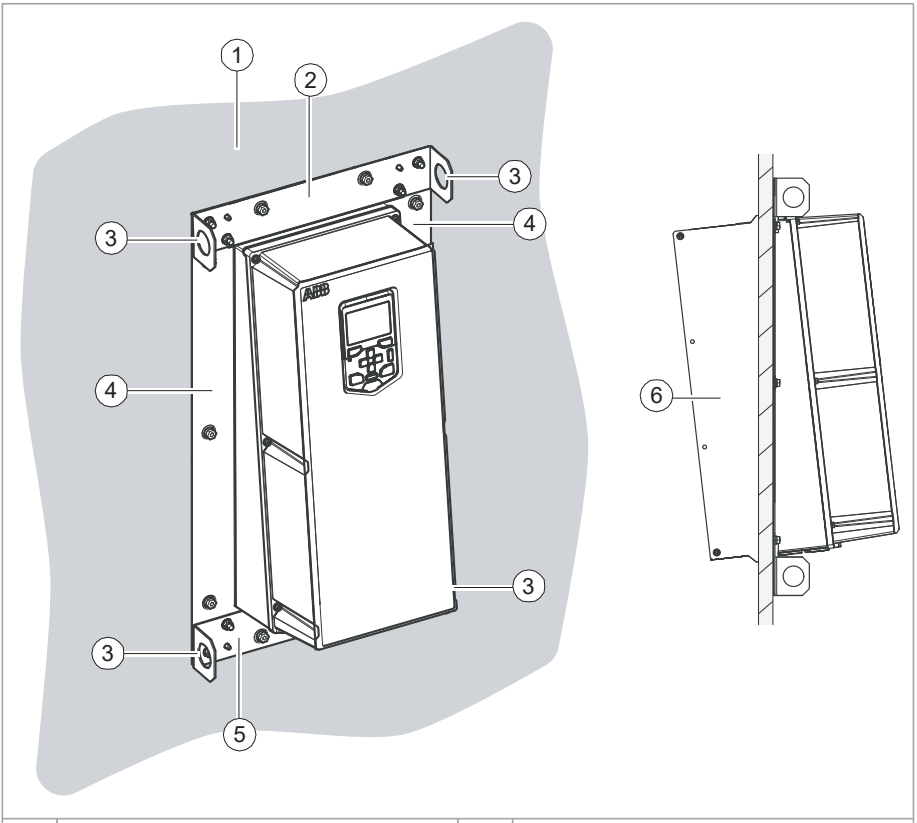

1	Mounting plate	4	Side flange bracket
2	Top flange bracket	5	Bottom flange bracket
3	Lifting hole	6	Drive heatsink in the cooling air channel

Example: upright position, frames R4 to R9

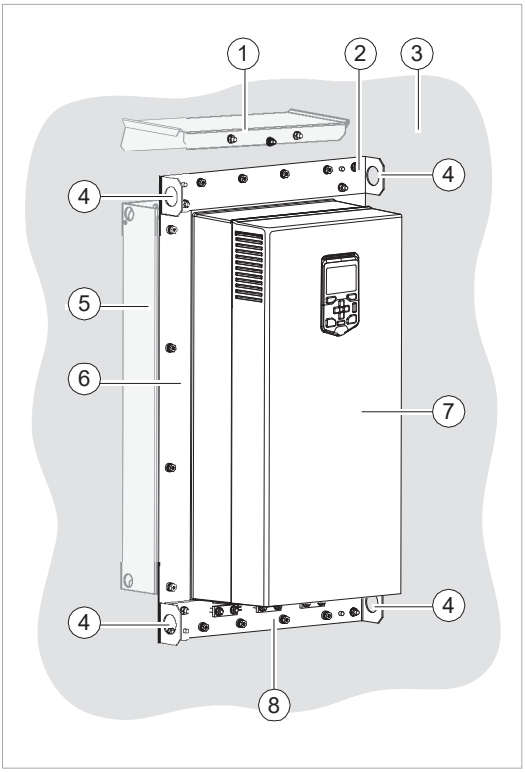

1 Hood (in the cooling air channel; required for UL Type 12)

2 Top flange bracket

3 Mounting plate

4 Lifting hole

5 Drive heatsink in the cooling air channel

6 Side flange bracket

7 Drive front side

8 Bottom flange bracket

Degree of protection

The degree of protection of the back of the drive (heatsink) is always IP55 (UL Type 12) regardless of the cover. When the cover is not in position, the degree of protection of the front part of the drive is IP20 (UL Open Type). The IP55 (UL Type 12) cover can only be in position for frame R3.

Frame sizes R1…R3 with option +B063: The degree of protection of the back of the drive (heatsink) is IP66.

Frame sizes R1…R3 with option +B066: The degree of protection of the back of the drive (heatsink) is UL Type 4X.

Special requirements

Frame size	IP21 (UL Type 1)
R1 R2 R3 R4	Install a sealing plug and an auxiliary cooling fan, or remove the front cover. To order the auxiliary cooling fan, refer to Ordering codes. **An auxiliary cooling fan is necessary** because the sealing plug prevents cooling air flow to the control circuits of the drive. **Exception:** In a dry environment, you can leave the cover in position without the sealing plug.

Ordering codes

The flange mounting kit is a plus code option (+C135) or ordered separately with these ordering codes.

Frame size	Ordering code of flange mounting kit
R1	3AXD50000105311 (IP21, UL Type 1)
R1	3AXD50001125462 (IP66, UL Type 4X)
R2	3AXD50000105328 (IP21, UL Type 1)
R2	3AXD50001125479 (IP66, UL Type 4X)
R3	3AXD50000105335 (IP21 and IP55, UL Type 1 and UL Type 12)
R3	3AXD50001125486 (IP66, UL Type 4X)
R4	3AXD50000031460 (IP21, UL Type 1)
R5	3AXD50000031461 (IP21, UL Type 1)
R6	3AXD50000018852 (IP21, UL Type 1)
R7	3AXD50000018853 (IP21, UL Type 1)
R8	3AXD50000018854 (IP21, UL Type 1)
R9	3AXD50000018855 (IP21, UL Type 1)

Frame size	Ordering code of IP55 (UL Type 12) internal cooling fan for IP21 (UL Type 1) drives
R1	3AXD50000050128
R2	3AXD50000050128
R3	3AUA0000088115
R4	3AXD50000034334

3

Mechanical installation – General

Contents of this chapter

This chapter gives a general description of how to mechanically install the drive with the flange mounting kit.

Safety instructions

Obey the general safety instructions in the hardware manual and the task-specific instructions in this supplement.

Wear protective gloves and long sleeves. Some parts have sharp edges.

Examining the installation site

Make sure that the installation site complies with these requirements:

- The installation site has sufficient ventilation to prevent overheating of the drive. Refer to Losses, cooling data and noise in the hardware manual for the required air flow in the cooling air channel and in the front part of the drive.
- The operation conditions of the drive agree with the specifications in Ambient conditions in the hardware manual.
- The mounting plate is vertical, non-flammable and strong enough to hold the weight of the drive.
- The material behind, above and below the drive is non-flammable.

- There is enough free space above and below the drive for cooling air flow, service and maintenance. There is enough free space in front of the drive for operation, service and maintenance. Refer to Free space requirements in this supplement and Dimensions, weights and free space requirements in the hardware manual.
- When you install drives above one another, make sure that the hot air from the outlet of the drive flows away from the inlet of the drive above it.

Free space requirements

You can install the flange-mounted drives side by side. For additional requirements, refer to Examining the installation site (page 15) and Additional requirements for cabinet installations (page 18).

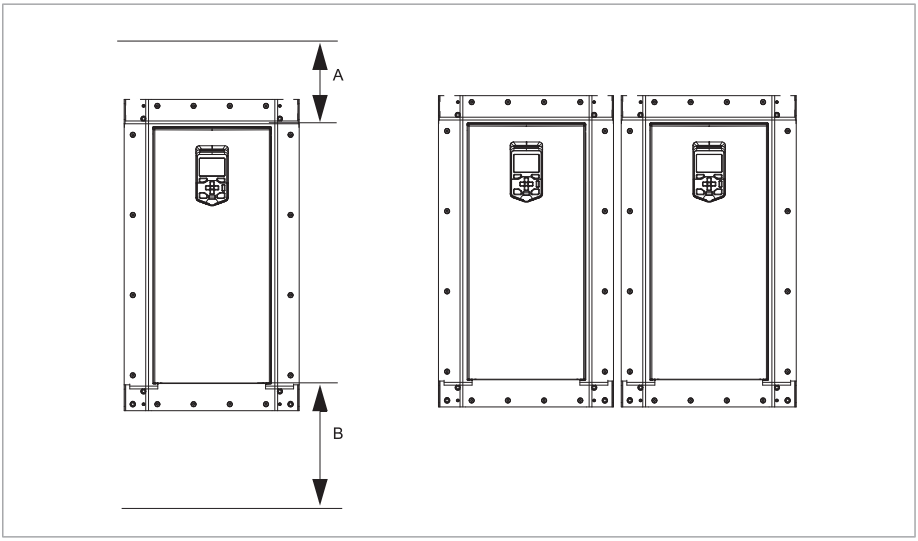

Note: The free space requirements below are for the heatsink side of the mounting plate. There is no free space requirement for the front side of the mounting plate. That area can be occupied by other equipment (for example, contactors, relays, wires, ducts, and so on).

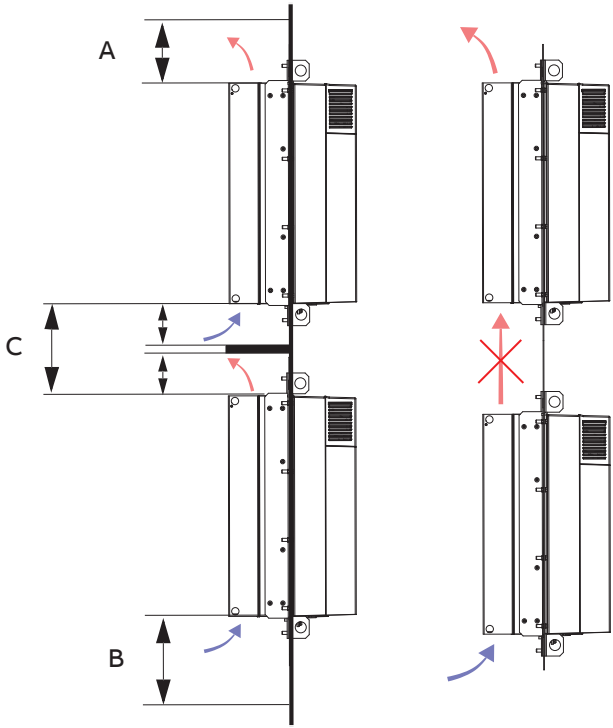

Frame	A		B		C	
	mm	in	mm	in	mm	in
R1 … R2	100	3.94	200	7.87	250	9.84
R1 … R2 (IP66, UL Type 4X)	220/100 1)	8.66/3.94 1)	235/200 1)	9.25/7.87 1)	400/250 1)	15.75/9.84 1)
R3 (IP66, UL Type 4X)	310/190 1)	12.20/7.48 1)	235/200 1)	9.25/7.87 1)	400/250 1)	15.75/9.84 1)
R3 … R5	115	4.53	200	7.87	250	9.84
R6 … R9	200	7.87	300	11.81	250	9.84

1) Distance from the drive / distance from the back hood

Additional requirements for cabinet installations

Make sure that the cooling air gratings of the drive are not covered. Make sure that the required cooling air flow is achieved. In a fully closed cabinet with no forced ventilation, a fan for circulating air inside the cabinet may be needed.

For UL installations, plan the wire bending radius of input power and motor cables according to UL rules.

Necessary tools

To move a heavy drive, you need a crane, fork-lift or pallet truck (check load capacity).

To lift a heavy drive, you need a hoist.

To install the drive mechanically, you need the following tools:

- drill with suitable bits
- screwdriver set (Torx, flat and/or Phillips, as appropriate)
- torque wrench
- socket set, Hex key set (metric)

Unpacking and examining the delivery

The flange mounting kit package is tied with straps onto the drive package or sent separately.

To unpack:

- Cut the straps.
- Remove the flange mounting kit package. For the contents of the kit package, refer to the kit package contents section in the mechanical installation chapter of the drive frame size later in this manual.
- To open the drive package, refer to the drive hardware manual.

Examine that all items are present and that there are no signs of damage. Read the data on the type designation label of the drive to make sure that the drive is of the correct type.

4

Mechanical installation – Frames R1…R3

Contents of this chapter

This chapter describes how to mechanically install drive frame sizes R1…R3 with the flange mounting kit.

Flange mounting kit package contents

The figure below show the layout of the flange mounting kit package. Examine that all items are present and that there are no signs of damage.

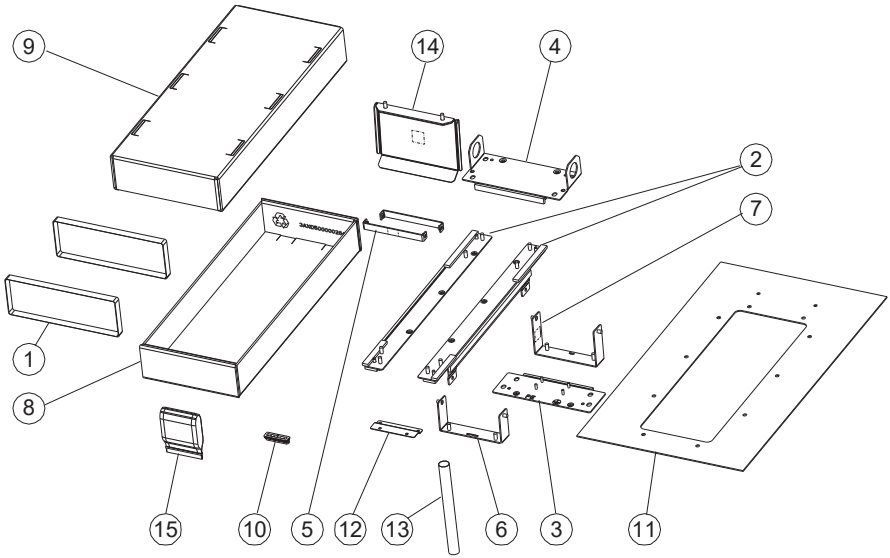

1	Straps	12	Grounding plate (In frame R3 different)
2	Side brackets	13	Quick guide
3	Bottom bracket	14	Hood (required for UL Type 12)
4	Top bracket (In frame R3 different)	15	Screw package: • M4 nut (4 pcs) • M5x20 screw (4 pcs) • M6x25 screw (R1: 10 pcs; R2: 12 pcs; R3: 14 pcs) [1)] • M6 nut (R1…R2: 18 pcs; R3: 19 pcs) • M4x8 screw (R1…R2: 2 pcs)
5	Tightening brackets		
6	Bottom U-bracket		
7	Top U-bracket		
8	Cardboard tray		
9	Top cardboard cover		
10	Sealing plug		
11	Mounting template		

1) The delivery does not include the Rivet or Kalei nuts for the M6 screws.

Mounting template

The flange mounting kit package includes a template in actual size to drill the attaching holes and to cut the hole in the mounting plate.

An example template is shown below.

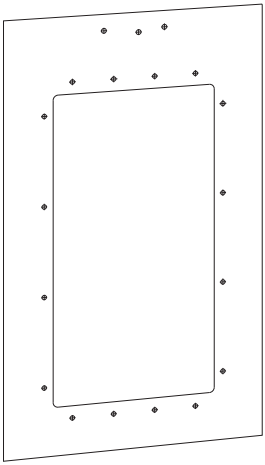

Installation procedure

1. **For IP21 (UL Type 1)**: To remove the fan assembly, push the retaining clips and pull the fan assembly from the frame.

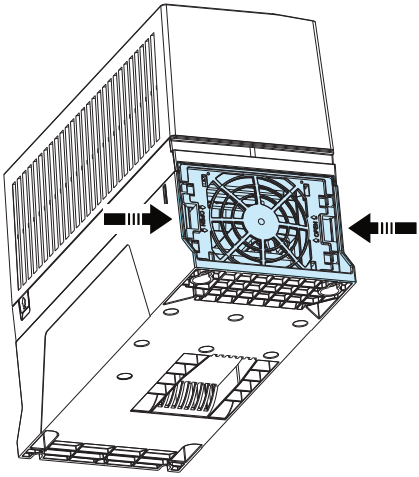

2. **For IP21 (UL Type 1)**: Insert the sealing plug (a) into the hole.

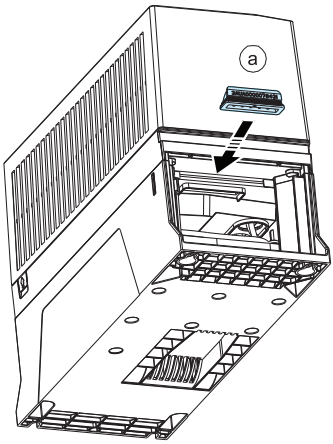

3. **For IP21 (UL Type 1)**: Install the fan assembly.

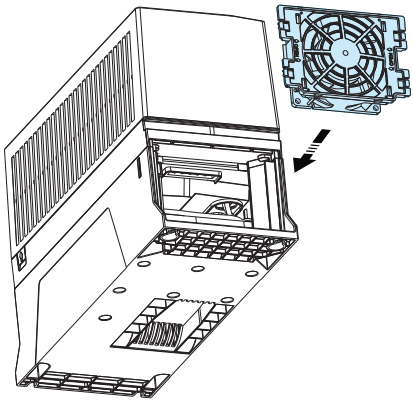

4. **For IP21 (UL Type 1)**: To install the auxiliary fan, refer to Replacing the auxiliary cooling fan, IP55 (UL Type 12) frames R1 …R2 or Replacing the auxiliary cooling fan, IP55 (UL Type 12) frame R3 in the hardware manual.

5. **For IP55 (UL Type 12)**: The cover can be in position only for frame R3 but it must be removed from frames R1 …R2.

   To remove the cover:
   - Remove the tightening screws with a T20 Torx screwdriver (a).
   - Lift the cover up (b).
   - Lift the cover off (c).

   Recycle the cover according to ACH580-01, ACQ580-01 and ACS580-01 drives recycling instructions and environmental information (3AXD50000040612 [English]).

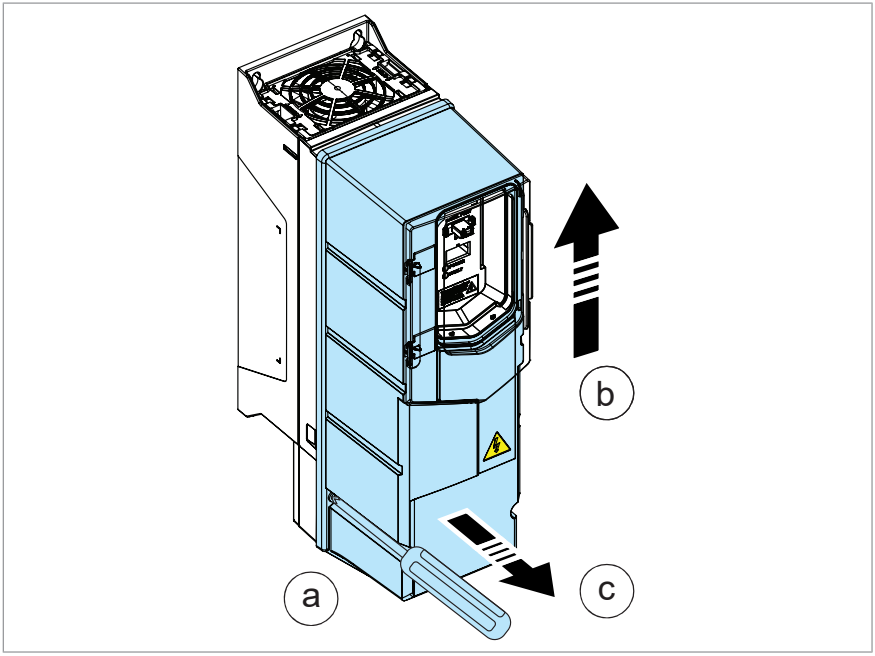

6. Attach the U-brackets (b and c) to the back of the drive.

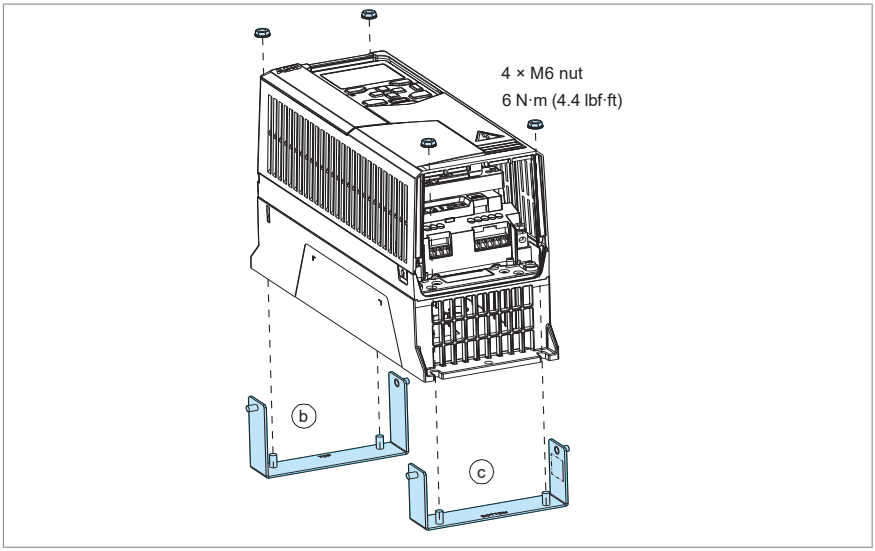

7. Attach the side brackets (d) to the U-brackets which were attached in step 6 using M6 nuts finger-tight.

8. Attach the tightening brackets (e) with M5x20 screws to press the side brackets against the module.

9. Tighten the side bracket nuts.

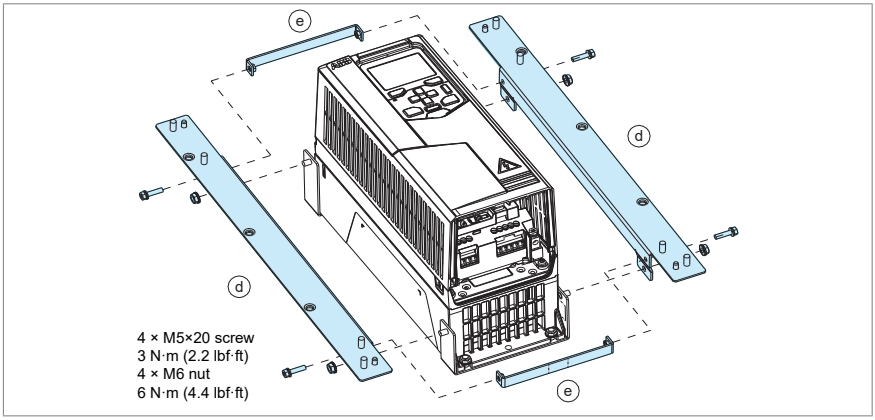

10. Attach the top bracket (f) and the bottom bracket (g) to the side brackets, first the inner sides (1) (the sides that touch the drive), then the outer sides (2).
11. Remove the tightening bracket (e) from the top to enable the replacement of the cooling fan.

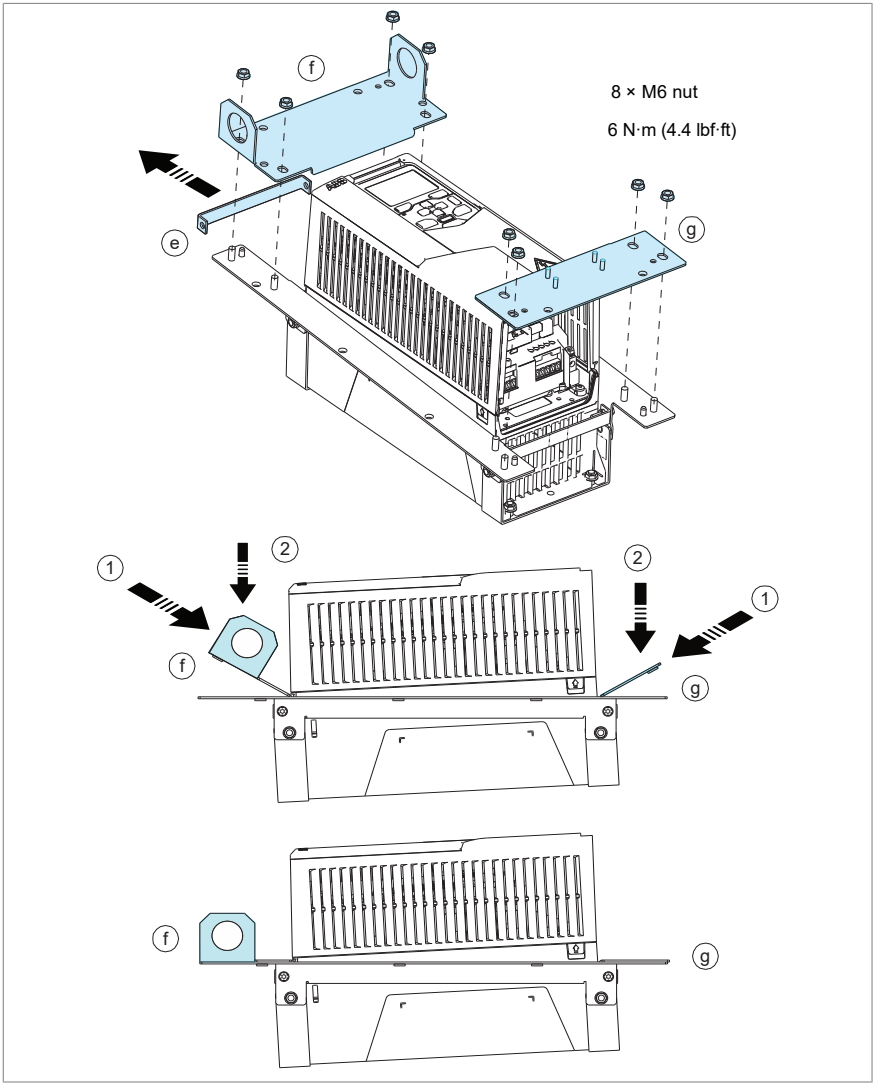

Optional steps

Installation of the grounding plate

For R1 and R2:

1. Push the grounding plate onto the alignment pins on the bottom bracket.
2. Attach the grounding plate with the screws and nuts.

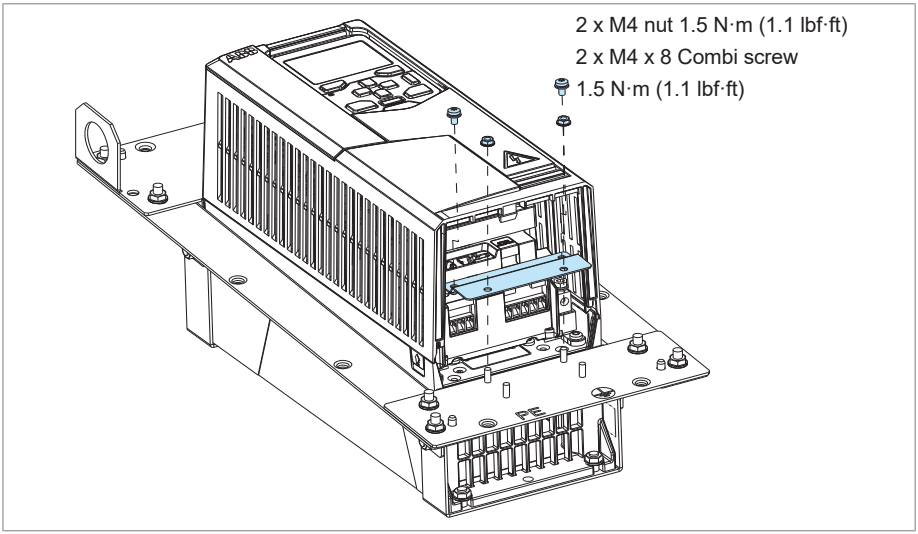

For R3: Attach the grounding plate to the bottom plate with the cable entry plate screw (h).

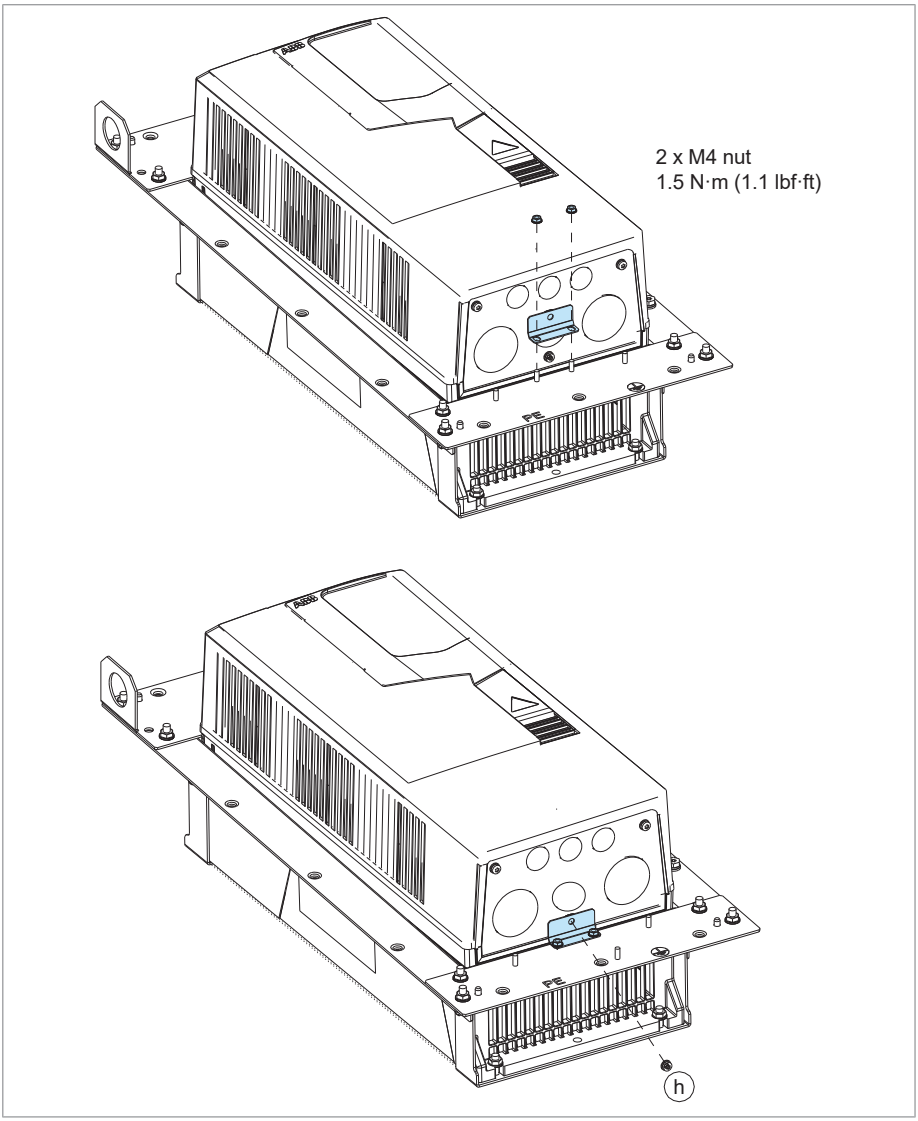

Installation of the power cable grounding shelf lower on the bottom bracket

1. Remove the cover and the cable entry plate.

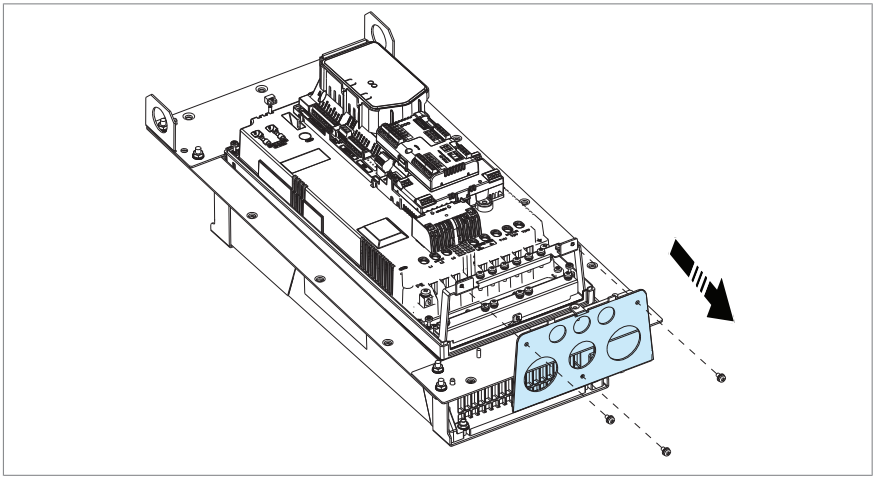

2. To remove the power cable shelf, remove screws (i).
3. Install the screws (1.5 N·m/1.1 lbf·ft) to avoid moisture exchange through the empty holes.
4. Attach the power cable shelf to the bottom bracket with M4 nuts.

Frame R3 is shown as an example. The cable shelf varies in different frame sizes.

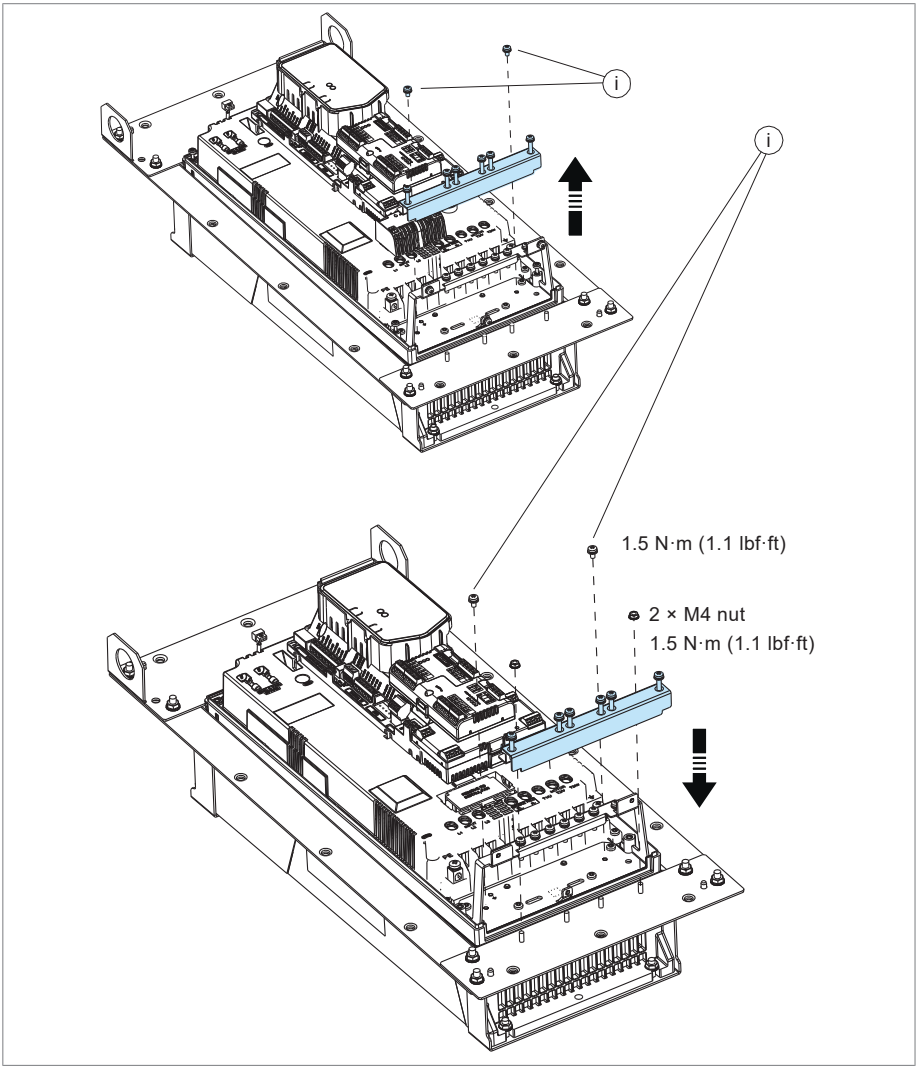

Installing the drive on the mounting plate

1. Refer to Dimension drawings (page 65) for the dimensions of the flange and the required opening in the mounting plate.
2. Attach the mounting template from the flange mounting kit package onto the mounting plate.
3. Make the opening and drill the holes for the mounting screws. Consider the hole size for Rivet or Kalei nuts (not included in the delivery).
4. Remove the mounting template.

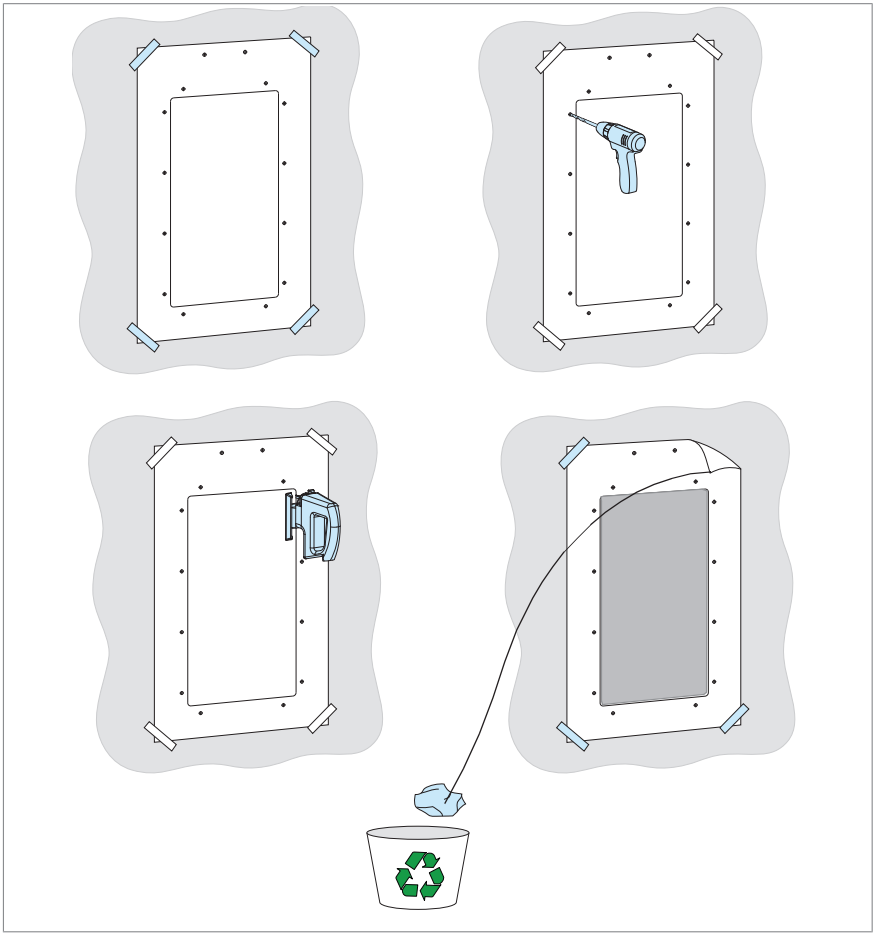

5. To fulfill UL Type 12 requirements at the backside of the drive, attach the hood to the cooling channel. This is not required for IP55 drives.

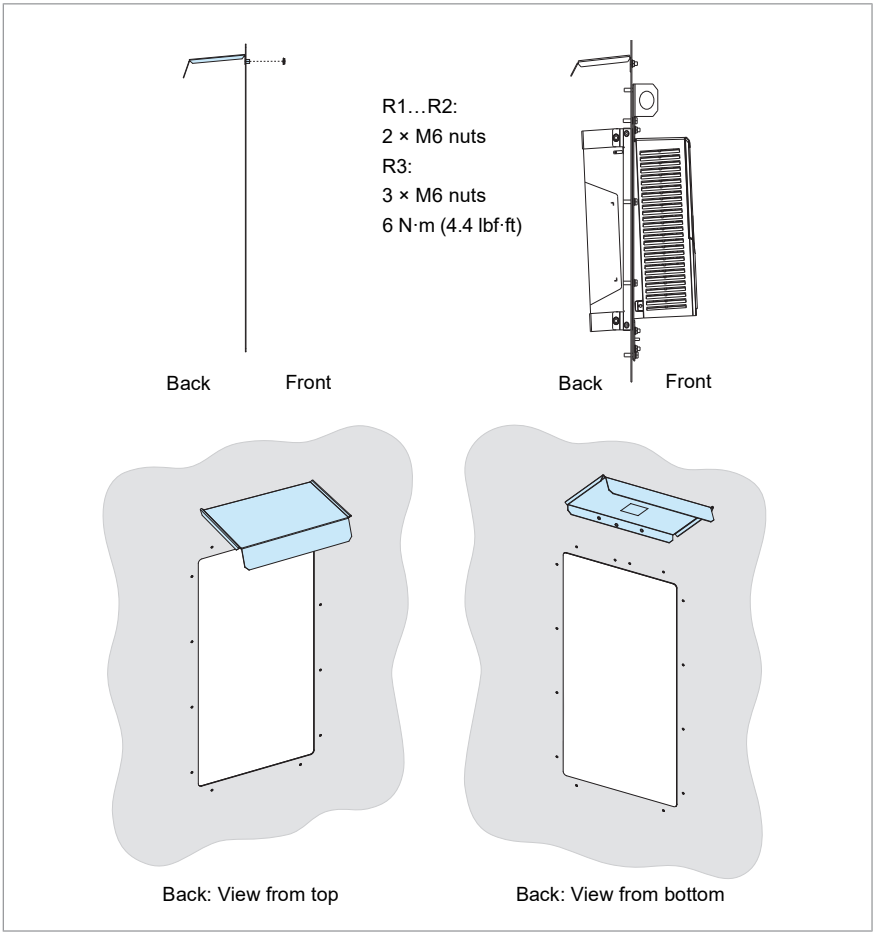

6. Attach chains to the drive lifting holes and lift the drive with a lifting device onto the opening in the mounting plate.
7. Attach the bottom bracket with one screw.
8. Attach the top bracket with one screw.
9. Attach the rest of the mounting screws. Remove the chains.

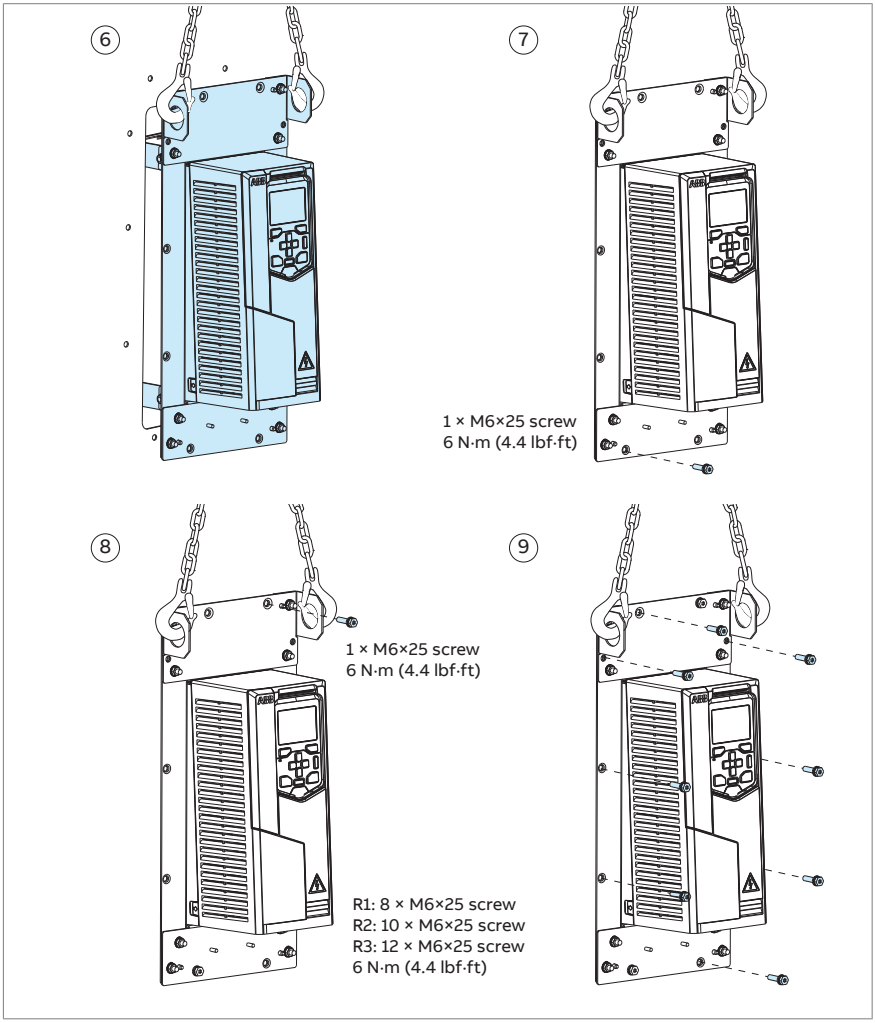

5

Mechanical installation – Frames R1…R3 +B063 +B066

Contents of this chapter

This chapter describes how to mechanically install drive frame sizes R1…R3 with option +B063 or +B066 with the flange mounting kit.

Flange mounting kit package contents

The figures below show the layout of the flange mounting kit packages. Examine that all items are present and that there are no signs of damage.

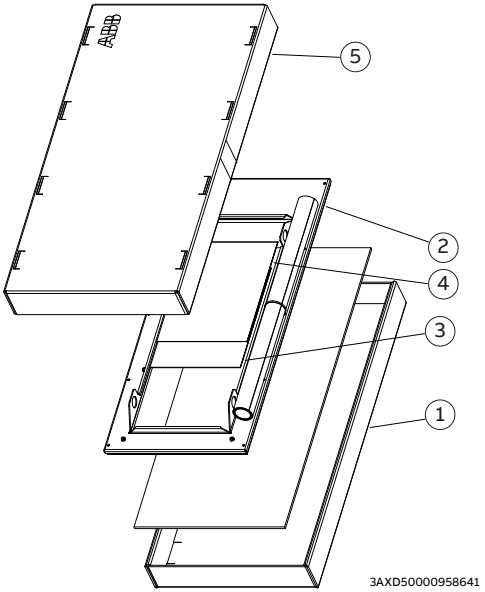

1	Cardboard tray
2	Flange
3	Mounting template
4	Quick guide
5	Top cardboard cover

Back hood

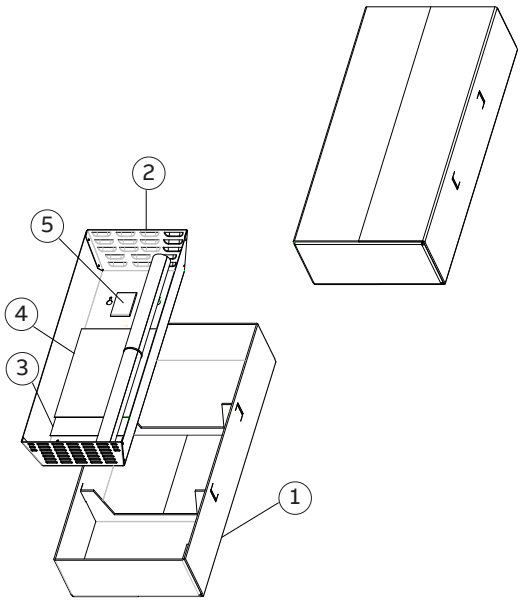

3AXD50001110758

1	Cardboard box
2	Back hood
3	Mounting template
4	Quick guide
5	Screw package

Mounting template

The flange mounting kit package includes a template in actual size to drill the attaching holes and to cut the hole in the mounting plate.

An example template is shown below.

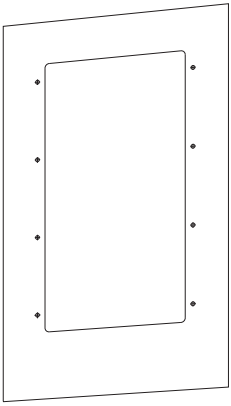

Installation procedure

1. Remove the front cover. Recycle the cover according to ACH580-01, ACQ580-01 and ACS580-01 drives recycling instructions and environmental information (3AXD50000040612 [English]).
2. Remove the conduit plate.

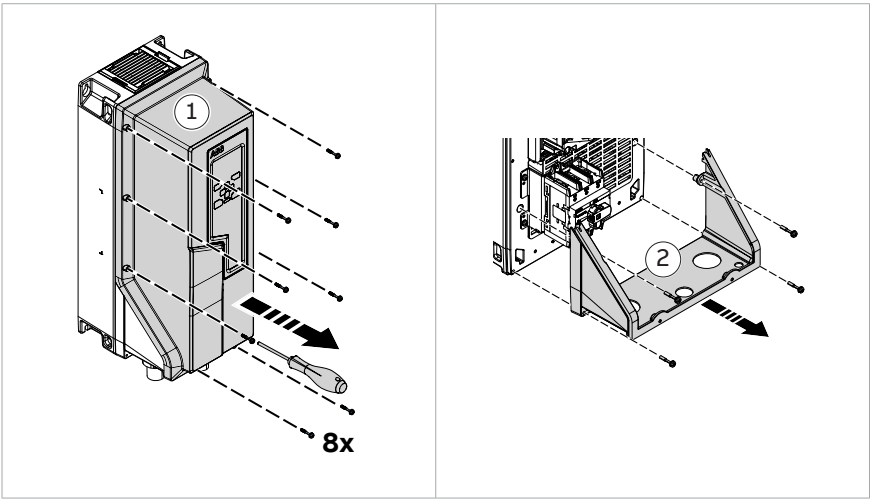

3. Install the flange onto the drive frame.

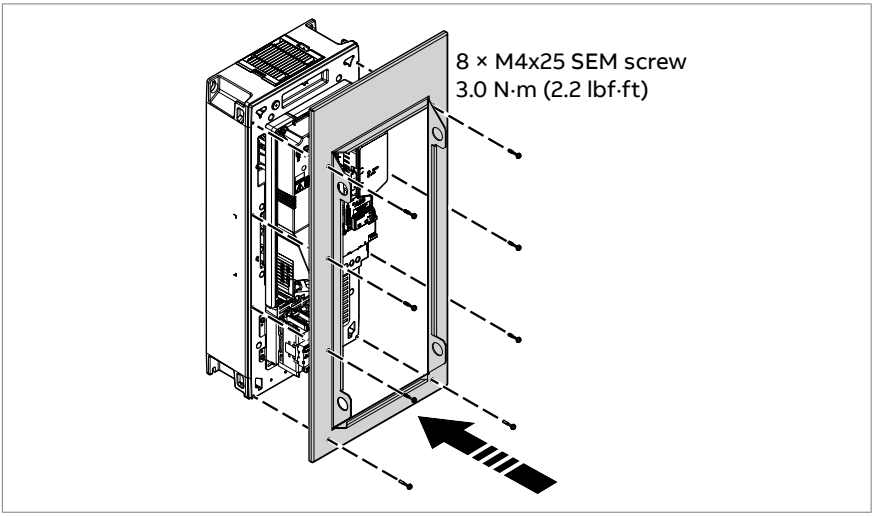

Installing the drive on the mounting plate

1. Refer to Dimension drawings (page 65) for the dimensions of the flange and the required opening in the mounting plate.
2. Attach the mounting template from the flange mounting kit package onto the mounting plate.
3. Make the opening and drill the holes for the mounting screws.
4. Remove the mounting template.

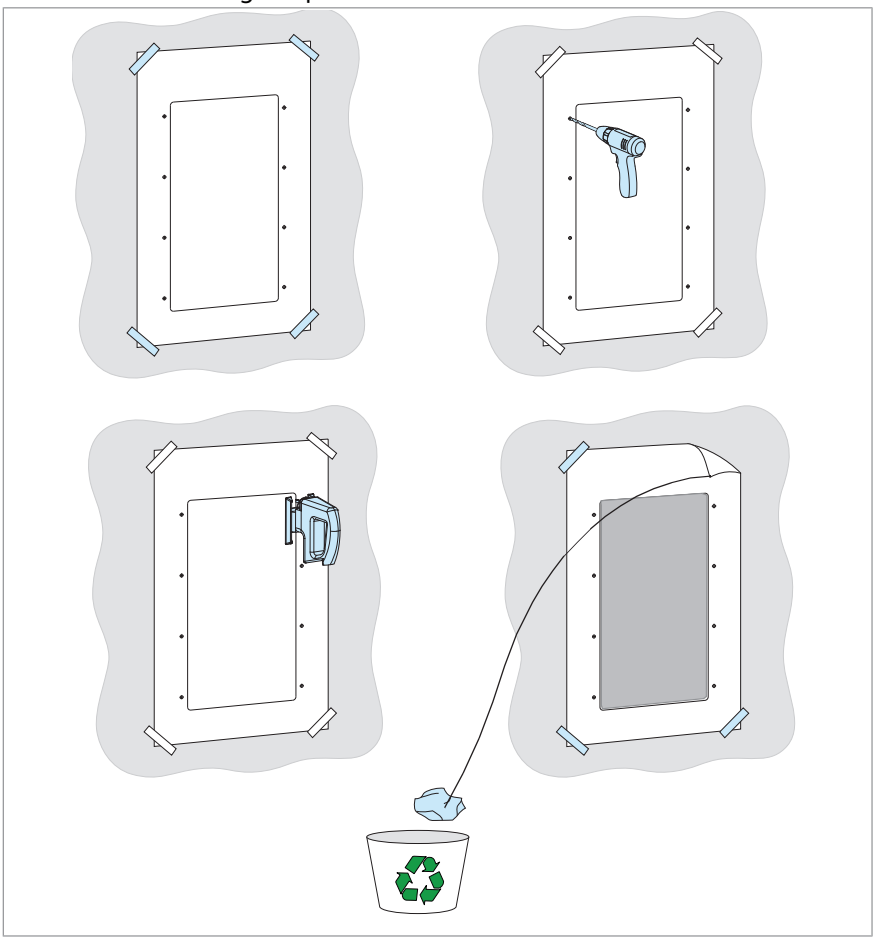

5. Attach chains to the flange lifting holes and lift the drive with a lifting device onto the opening in the mounting plate.

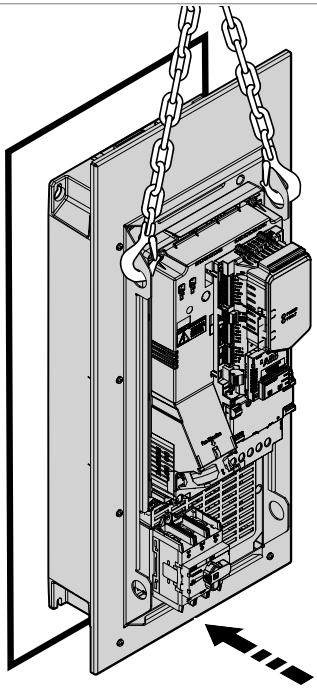

6. Attach the bottom corner of the flange with one screw.
7. Attach the top corner of the flange with one screw.
8. Attach the rest of the mounting screws.

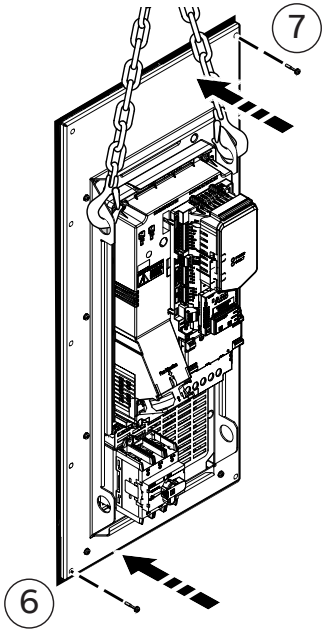	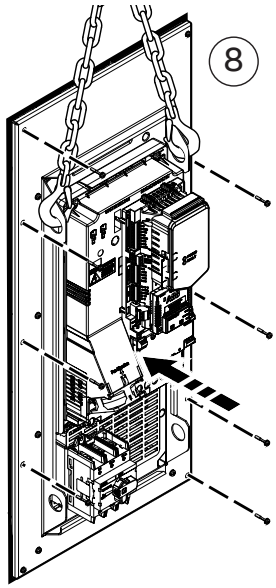
Screws: 2 × M4x0.7 [1)] Tightening torque: 3.0 N·m (2.2 lbf·ft).	**Screws:** Frames R1 and R2: 6 × M4x0.7[1)] Frame R3: 8 × M4x0.7[1)] Tightening torque: 3.0 N·m (2.2 lbf·ft).
Nuts: Use either PEM size PLC-M4x0.7 (nylon locking) or PEM size M4x0.7-PEM (standard) nuts.	

1) Minimum length of 25 mm (length varies with installation)

9. Remove the chains.
10. Apply a thick layer of silicone or similar sealant around each screw on the back side of the mounting plate.

Installing the back hood

1. On the back of the drive, remove the four screws on the top and bottom.
2. Start two M4x12 screws (delivered with the flange kit) on the top holes.
3. Install the back hood by hanging it from the two top screws using the keyholes at the top of the hood.
4. Attach the two bottom screws through the hood into the drive.
5. Torque all four screws to 2.0 N·m (1.5 lbf·ft).

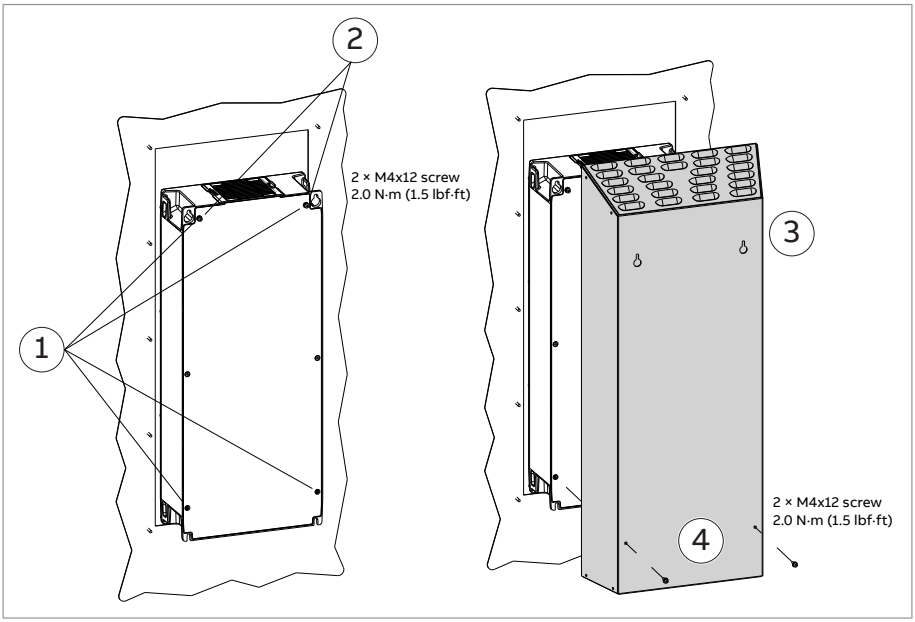

6

Mechanical installation – Frames R4 and R5

Contents of this chapter

This chapter describes how to mechanically install drive frame sizes R4 and R5 with the flange mounting kit.

Flange mounting kit package contents

The figure below shows the layout of the flange mounting kit packages. Examine that all items are present and that there are no signs of damage.

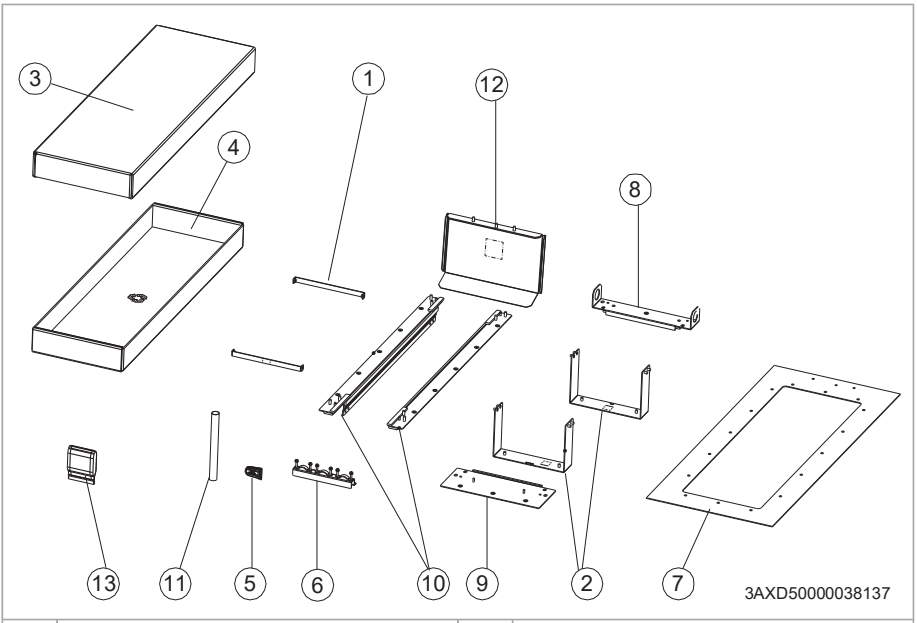

1	Tightening brackets	9	Bottom bracket
2	Top and bottom U-brackets	10	Side brackets
3	Top cardboard cover	11	Quick guide
4	Cardboard tray	12	Hood (required for UL Type 12)
5	Sealing plug R4	13	Screw package: • M5x20 screw (4 pcs) • M6x25 screw (16 pcs) [1)] • M6 nut (23 pcs)
6	Clamp plate R5		
7	Mounting template		
8	Top bracket		

1) The delivery does not include Rivet or Kalei nuts for the M6 screws.

Mounting template

The flange mounting kit package includes a template in actual size to drill the attaching holes and to cut the hole in the mounting plate.

An example template is shown below.

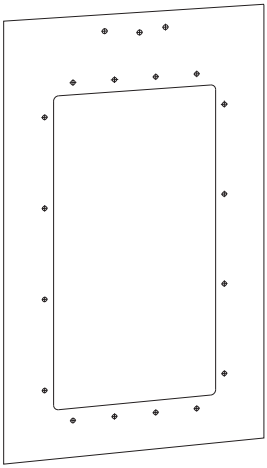

Installation procedure

1. **For R4, IP21 (UL Type 1)**: To remove the fan assembly, push the retaining clip with a flat screwdriver and pull the fan assembly out of the frame.

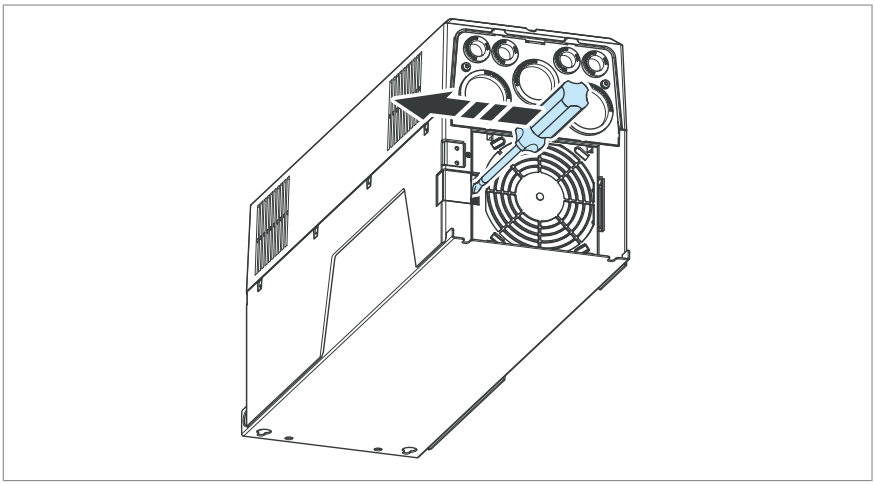

2. **For R4, IP21 (UL Type 1)**: Insert the sealing plug (a) into the hole.

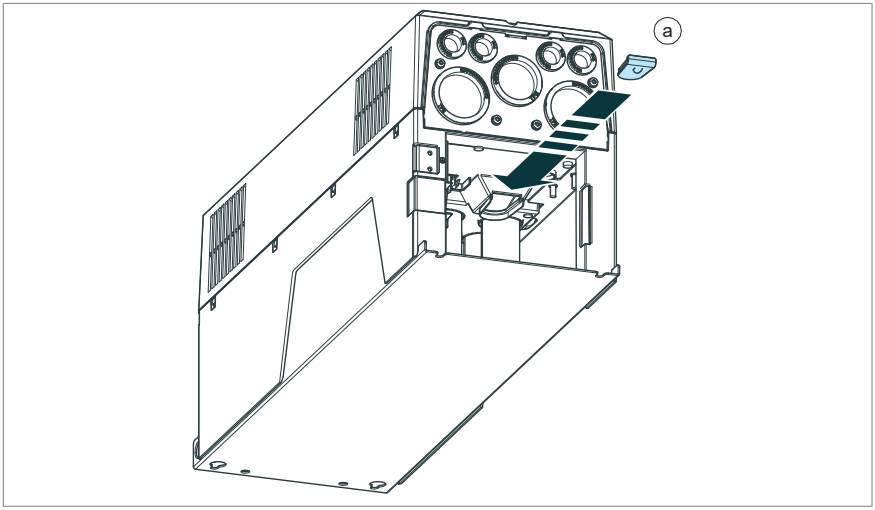

3. **For R4, IP21 (UL Type 1)**: Install the fan assembly.

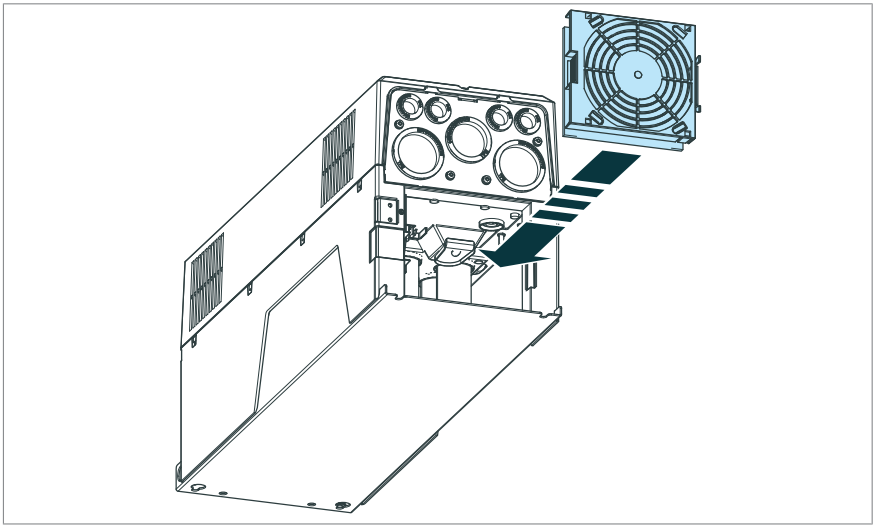

4. **For R4, IP21 (UL Type 1)**: To install the auxiliary fan for IP21 drives, first remove the covers.

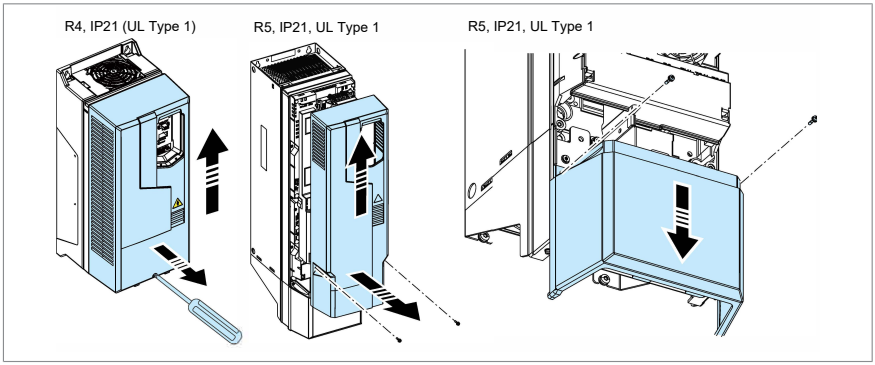

To install the fan, refer to Replacing the auxiliary cooling fan, IP55 (UL Type 12) frame R4; IP21 and IP55 (UL Type 1 and UL Type 12) frame R5 in the hardware manual.

5. **For IP55 (UL Type 12)**:
   To remove the cover:
   - Remove the tightening screws with a T20 Torx screwdriver (a).
   - Lift the cover up (b)
   - Lift the cover off (c).

   Recycle the cover according to ACH580-01, ACQ580-01 and ACS580-01 drives recycling instructions and environmental information (3AXD50000040612 [English]).

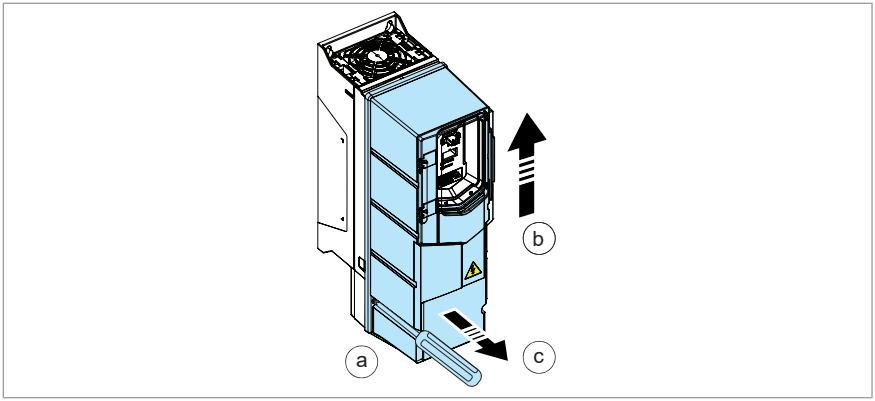

6. **For R4 and R5**: Attach the U-brackets (b and c) to the back of the drive.

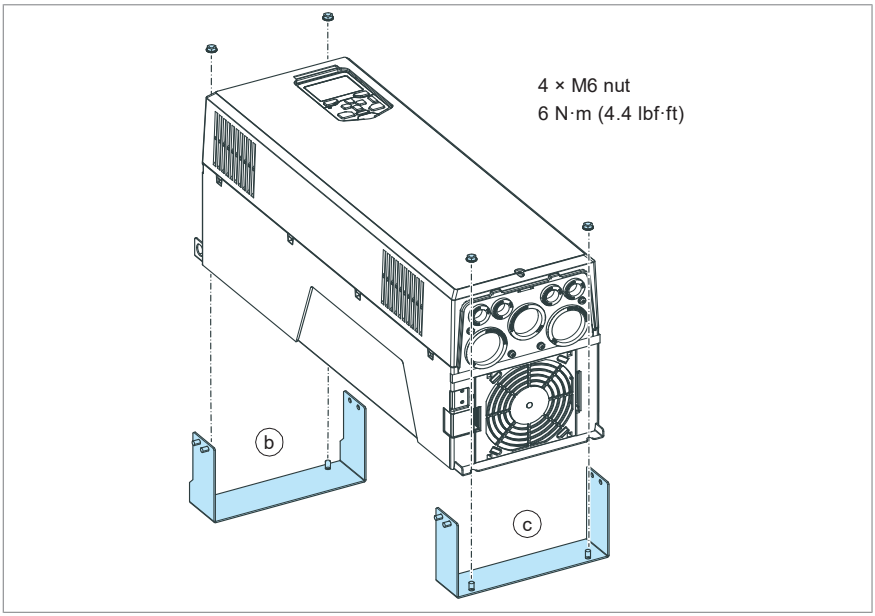

For R4 and R5:

7. Attach the side brackets (d) to the U-brackets with M6 nuts finger-tight.
8. Attach the tightening brackets (e) with M5x20 screws to press the side brackets against the module.
9. Tighten the side bracket nuts.

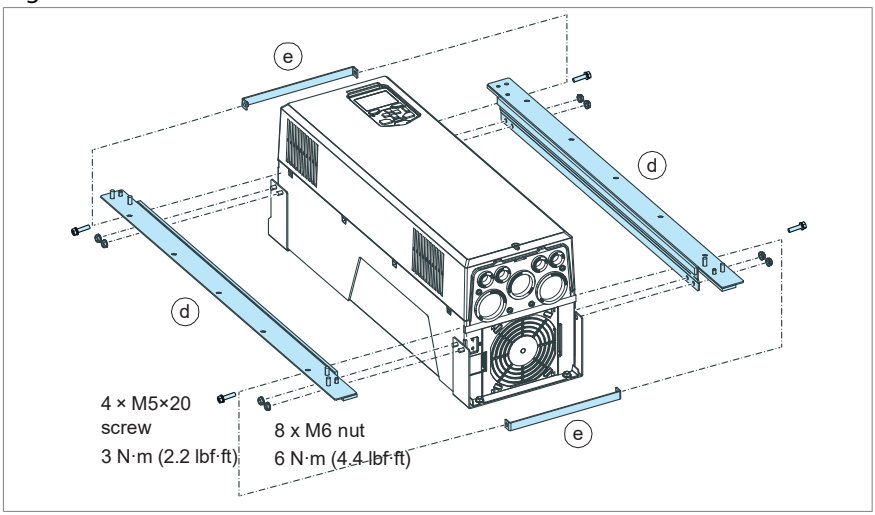

10. **For R4 and R5**: Attach the top (f) and bottom (g) brackets to the side brackets, first the inner sides (1) (the sides that touch the drive), then the outer sides (2).

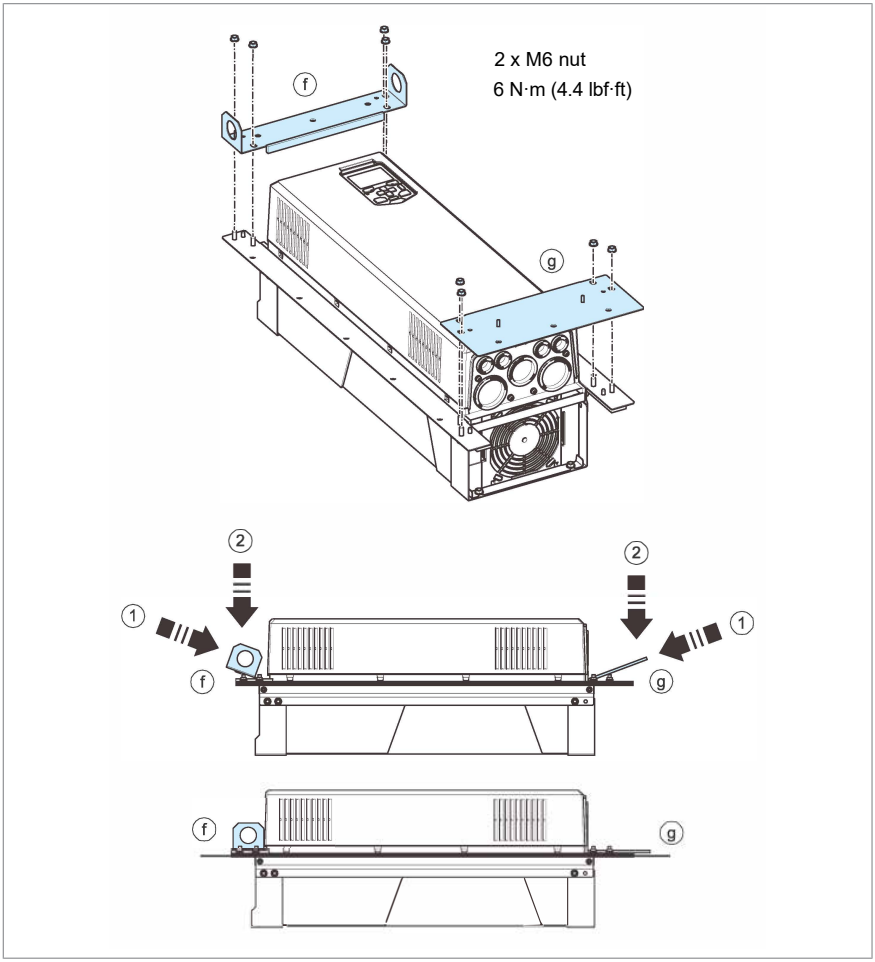

11. **For R4 and R5**: Remove the tightening bracket (e) from the front of the fan.

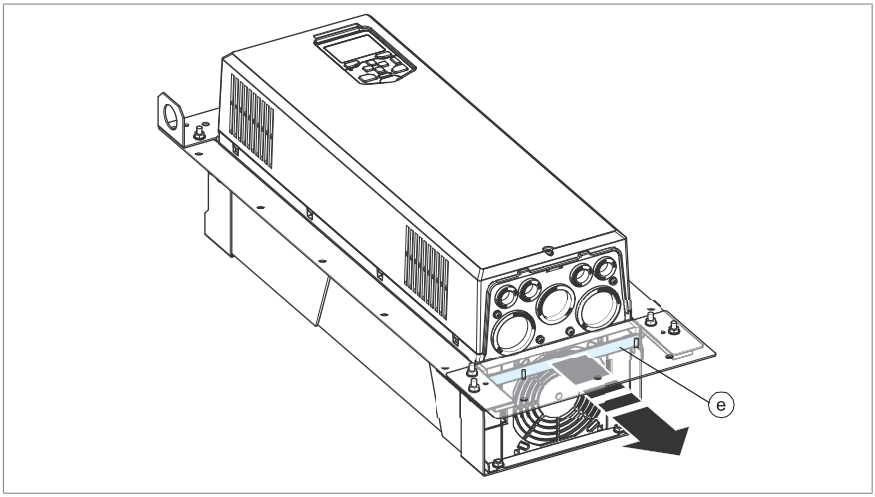

12. **For R5**: Attach the clamp plate.

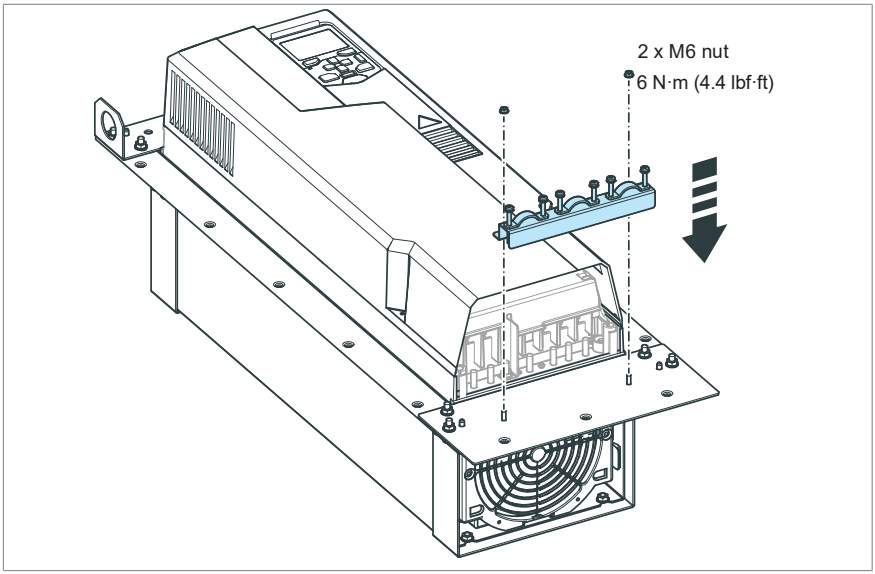

Installing the drive on the mounting plate

1. Refer to Dimension drawings (page 65) for the dimensions of the flange and the required opening in the mounting plate.
2. Attach the mounting template from the flange mounting kit package onto the mounting plate.
3. Make the opening and drill the holes for the mounting screws. Consider the hole size for the Rivet or Kalei nuts (not included in the delivery).
4. Remove the mounting template.

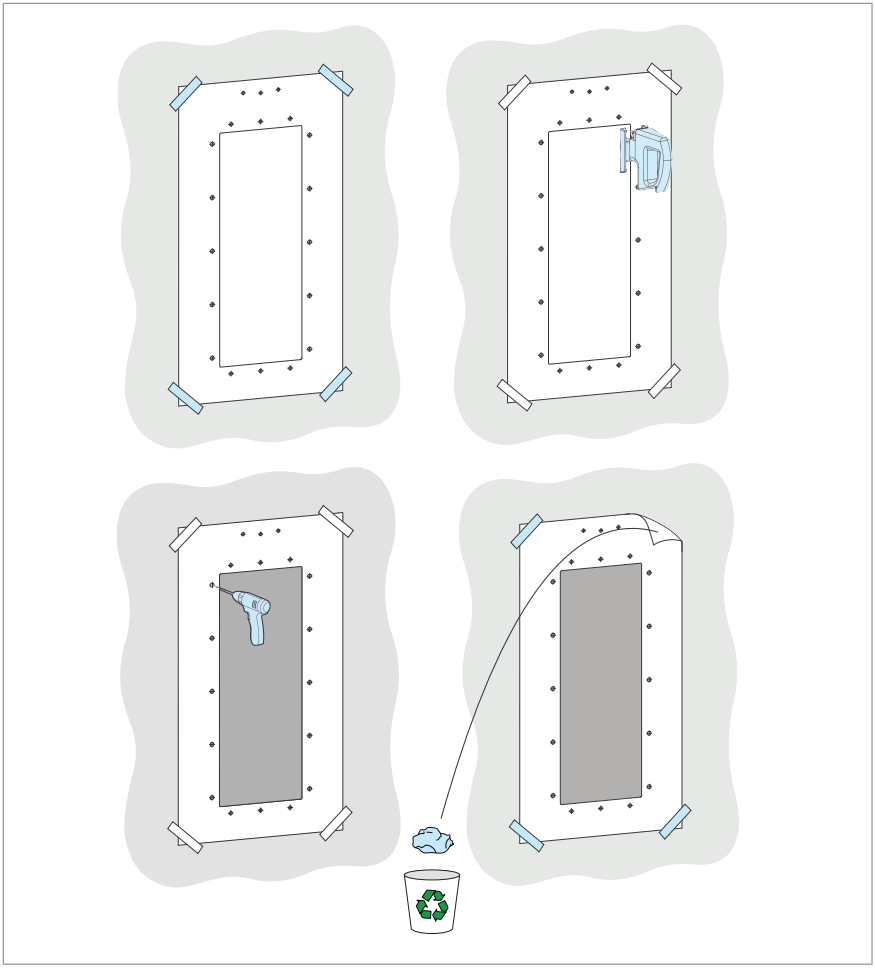

5. To fulfill UL Type 12 requirements at the backside of the drive, attach the hood to the cooling channel. This is not required for IP55 drives.

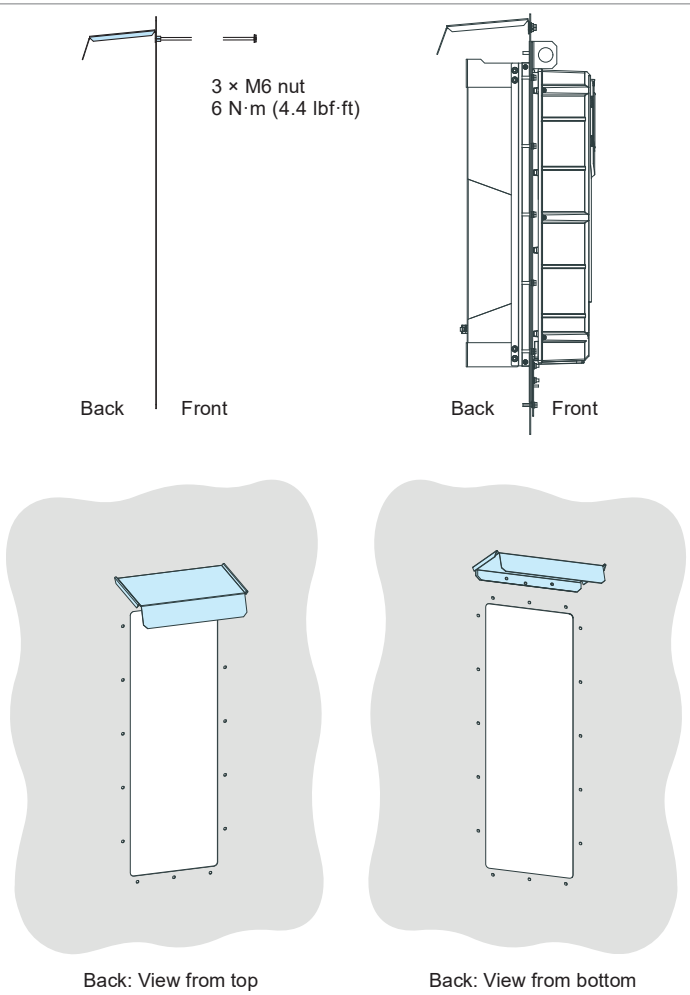

6. Attach the chains to the lifting holes of the flange and lift the drive with a lifting device onto the opening in the mounting plate.
7. Attach the bottom bracket with one screw.
8. Attach the top bracket with one screw.
9. Attach the rest of the mounting screws. Remove the chains.

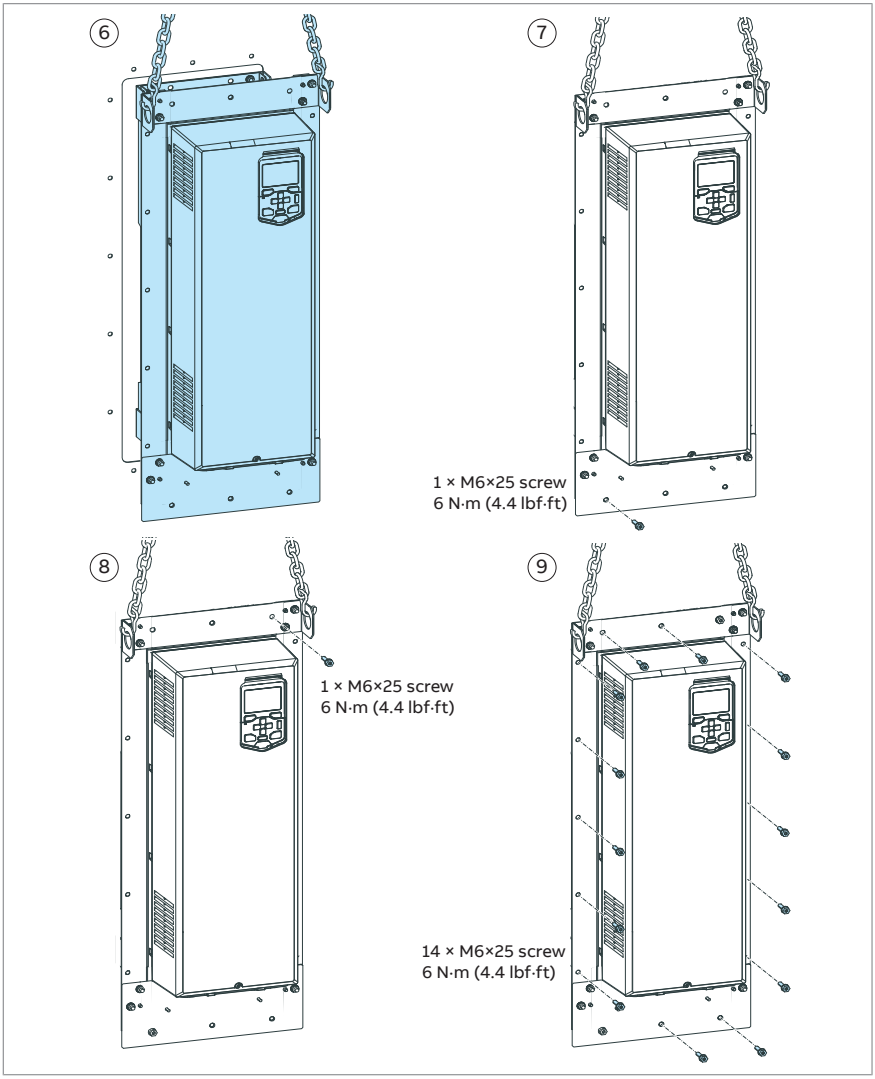

7

Mechanical installation – Frames R6…R9

Contents of this chapter

This chapter describes how to mechanically install drive frames sizes R6…R9 with the flange mounting kit.

Safety

WARNING!
For frame sizes R6 to R9: Use the lifting eyes of the drive when you lift the drive. Do not tilt the drive. The drive is heavy and its center of gravity is high. An overturning drive can cause physical injury.

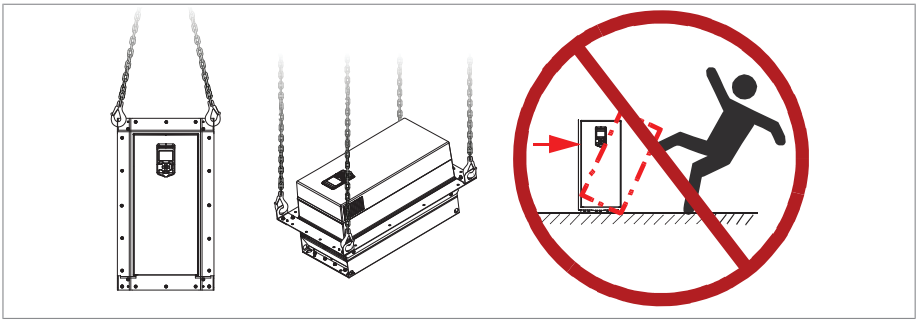

Flange mounting kit package contents

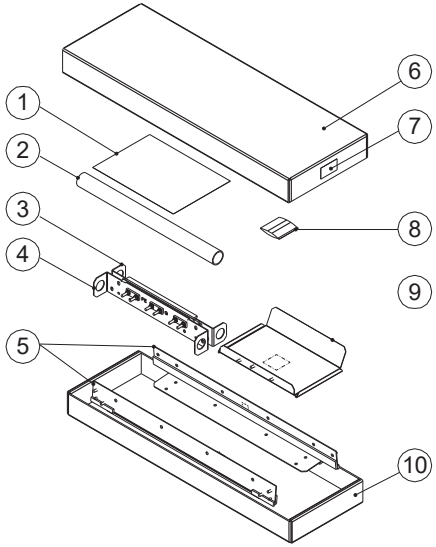

1	Quick guide	8	Screw package: • M6 nut (11 pcs) • M6×10 T30 (12 pcs) [1)] • M6×25 T25 (R6…R8: 16 pcs, R9: 18 pcs)
2	Mounting template		
3	Top bracket		
4	Bottom bracket		
5	Side brackets		
6	Top cardboard cover	9	Hood (required for UL type 12)
7	Option kit package label	10	Cardboard tray

1) The delivery does not include Rivet or Kalei nuts for the M6 screws.

Mounting template

The flange mounting kit package includes a template in actual size to drill the attaching holes and to cut the hole in the mounting plate.

An example template is shown below.

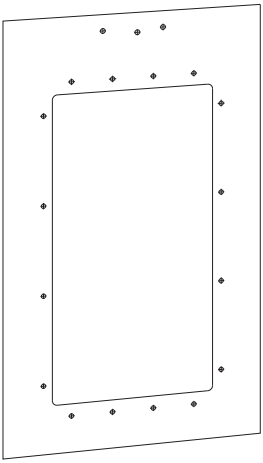

Installation procedure

1. **For IP55 (UL Type 12)**:
   To remove the cover:
   - Remove the tightening screws with a T20 Torx screwdriver (a).
   - Lift the cover up (b)
   - Lift the cover off (c).

   Recycle the cover according to ACH580-01, ACQ580-01 and ACS580-01 drives recycling instructions and environmental information (3AXD50000040612 [English]).

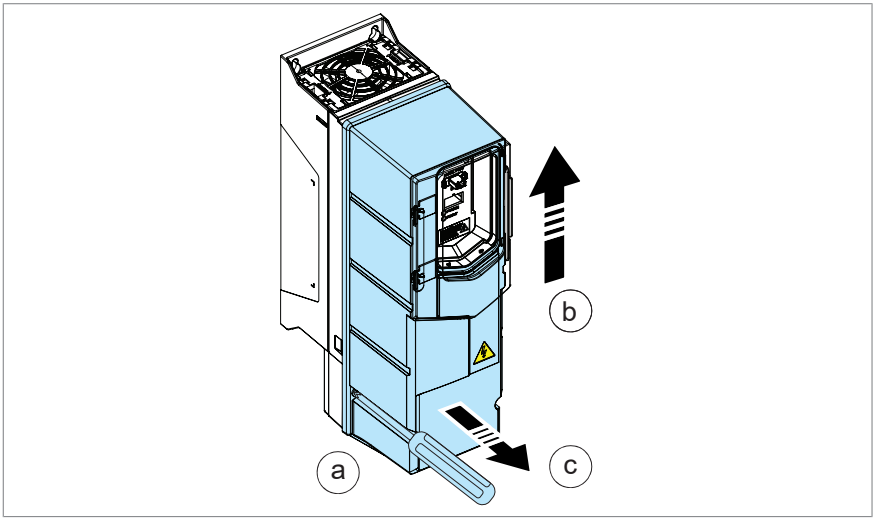

2. Attach the side brackets to the drive.

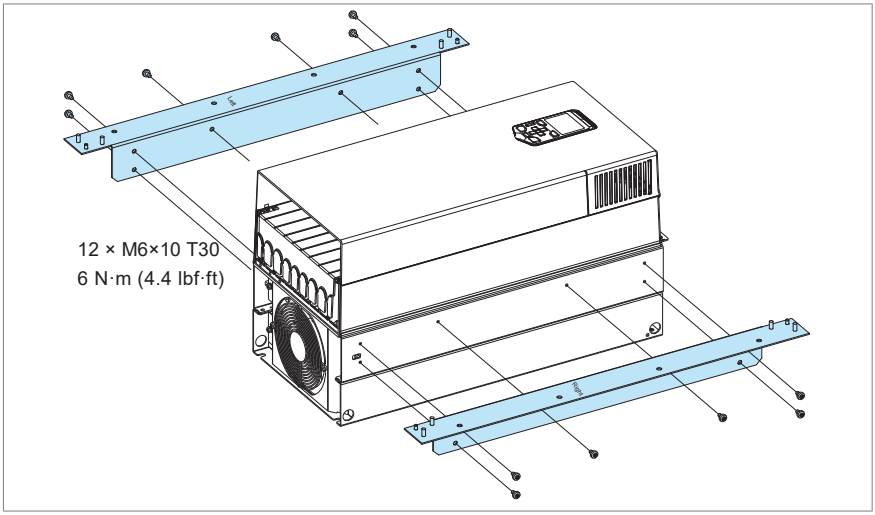

3. Attach the top bracket and the bottom bracket.

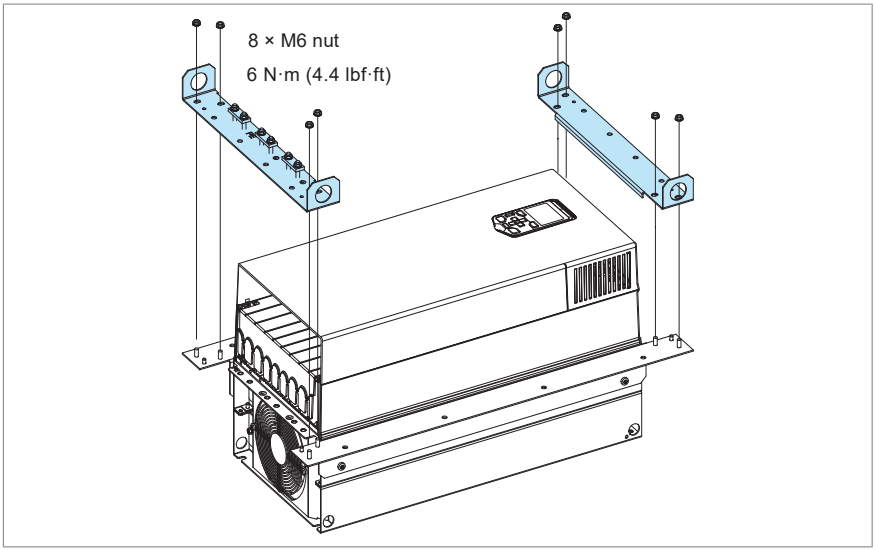

Installing the drive on the mounting plate

1. Refer to Dimension drawings (page 65) for the dimensions of the flange and the required opening in the mounting plate.
2. Attach the mounting template from the flange mounting kit package into the mounting plate.
3. Make the opening and drill the holes for the mounting screws. Consider the hole size for Rivet or Kalei nuts (not included in the delivery).
4. Remove the mounting template.

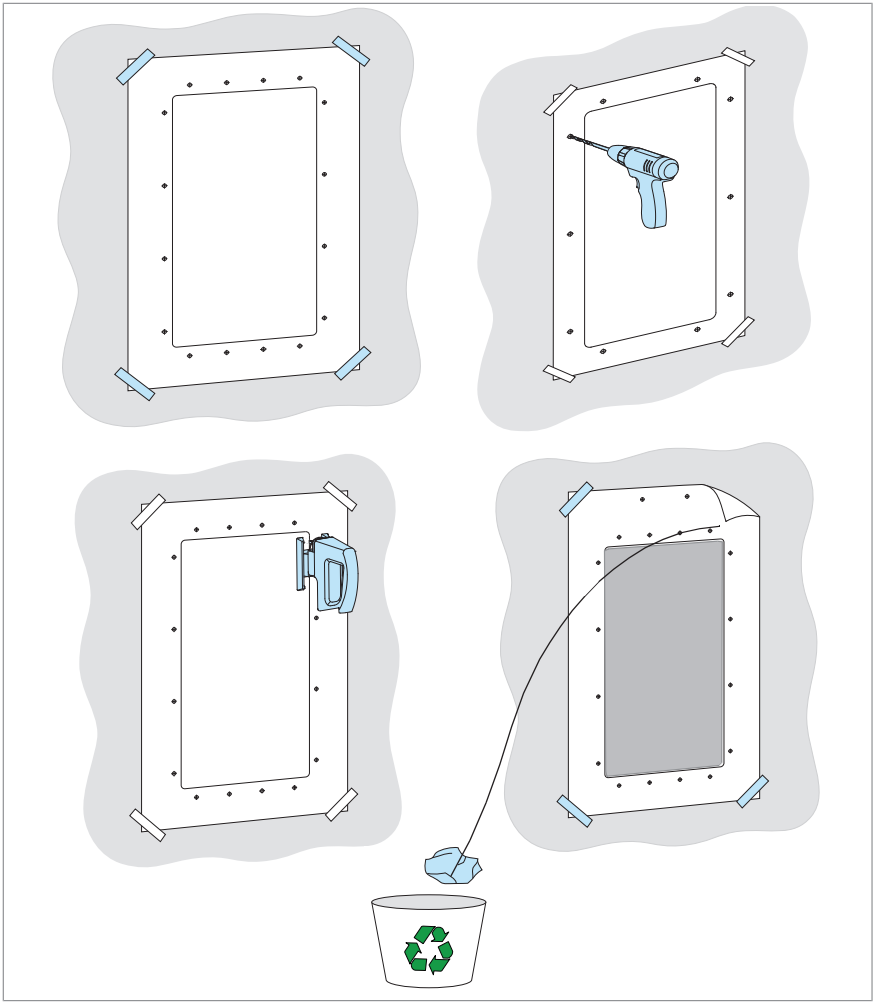

5. To fulfill UL Type 12 requirements at the backside of the drive, attach the hood to the cooling channel. This is not required for IP55 drives.

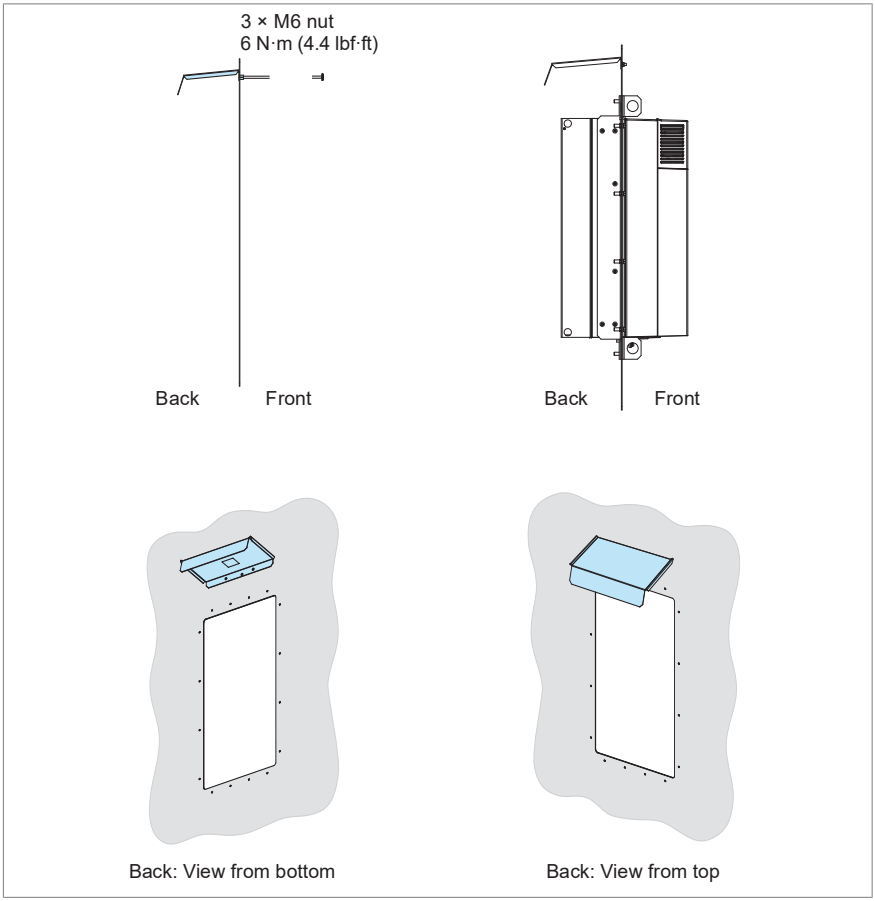

6. Attach the chains to the lifting holes of the flange and lift the drive with a lifting device onto the opening in the mounting plate.
7. Attach the bottom bracket with one screw.
8. Attach the top bracket with one screw.
9. Attach the rest of the mounting screws. Remove the chains.

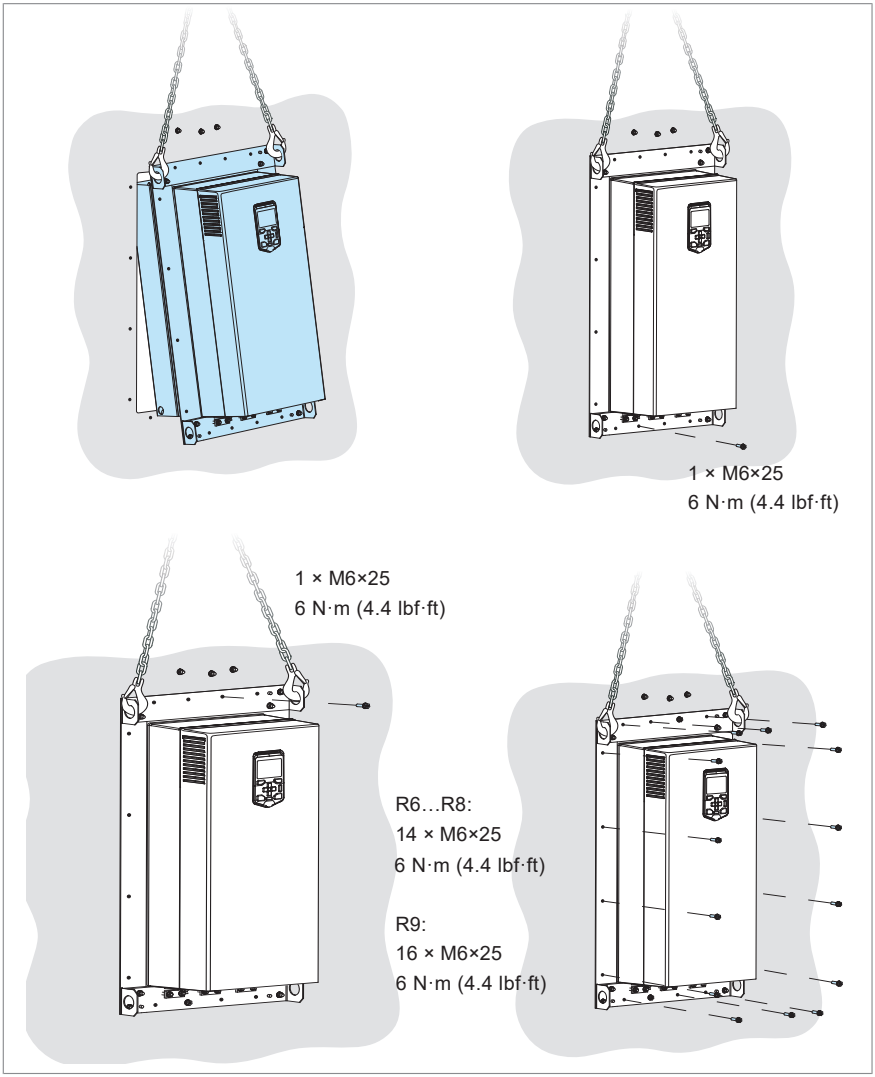

8

Dimension drawings

Contents of this chapter

This chapter contains the dimension drawings of the flange mounting kits and the required openings in the mounting plate. The drawings for frames R6…R9 show ACS880-01 but the flange dimensions are equal for ACH580-01, ACQ580-01 and ACS580-01.

Frame R1

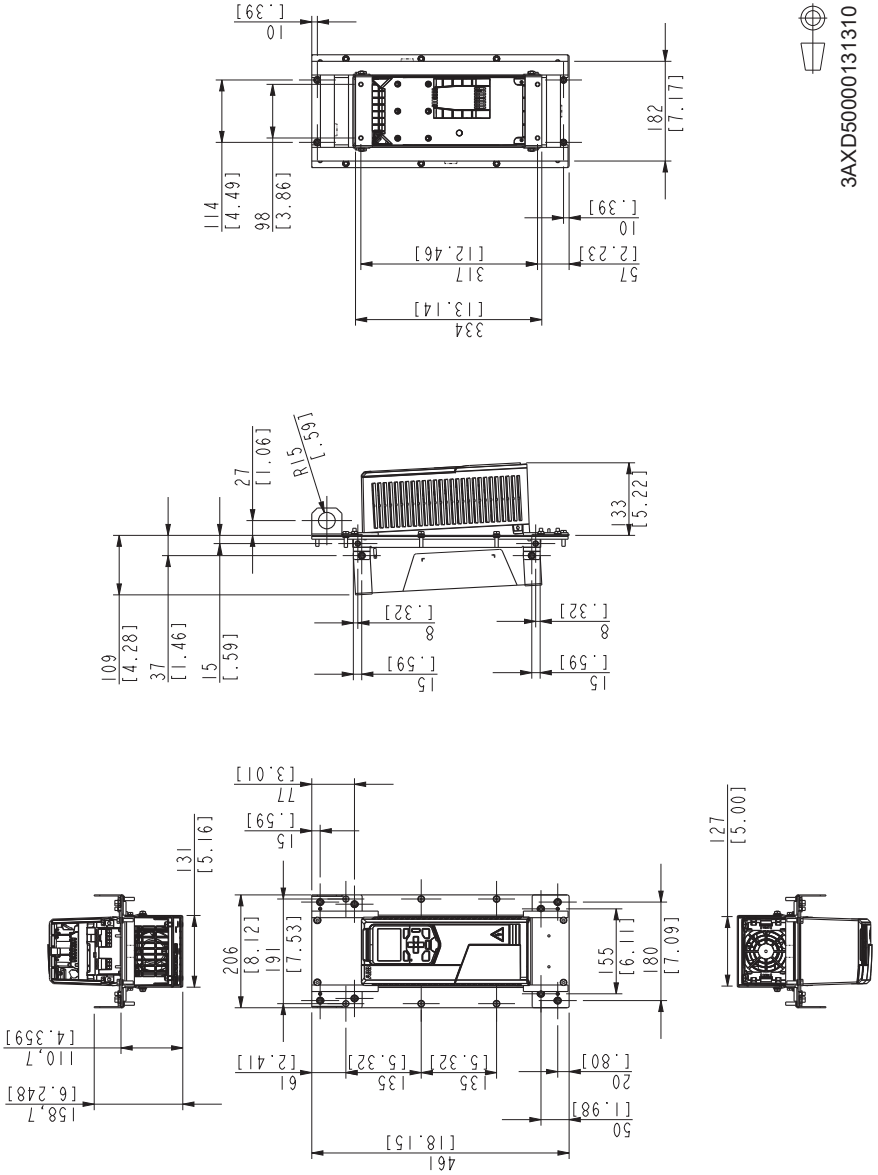
3AXD50000131310
10 [.39]
182 [7.17]
114 [4.49]
98 [3.86]
10 [.39]
57 [2.23]
317 [12.46]
334 [13.14]
R15 [.59]
27 [1.06]
133 [5.22]
109 [4.28]
37 [1.46]
15 [.59]
8 [.32]
8 [.32]
15 [.59]
15 [.59]
77 [3.01]
15 [.59]
131 [5.16]
127 [5.00]
206 [8.12]
191 [7.53]
155 [6.11]
180 [7.09]
110,7 [4.359]
158,7 [6.248]
61 [2.41]
135 [5.32]
135 [5.32]
20 [.80]
50 [1.98]
461 [18.15]

The hood is needed for UL Type 12 installation only.

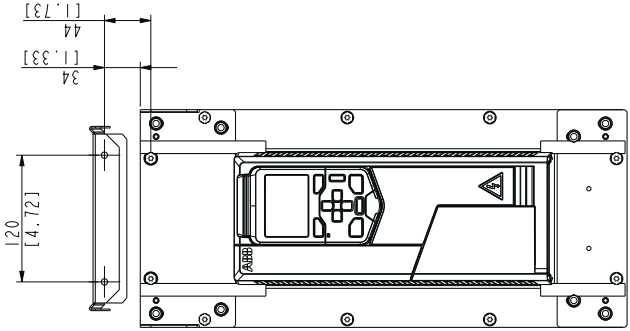

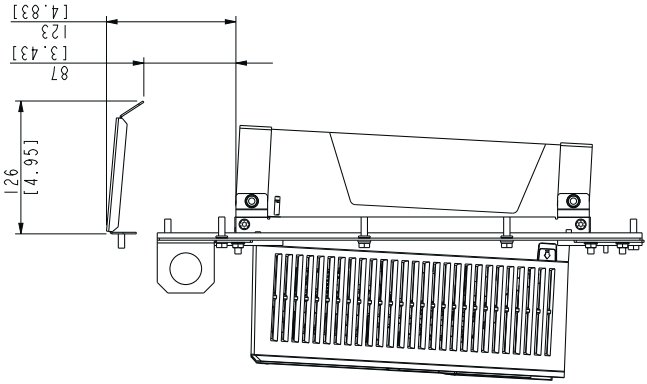

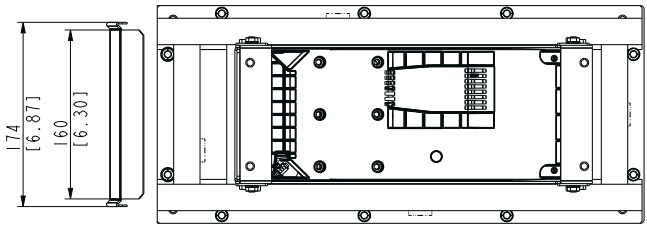

Attaching points and hole dimensions

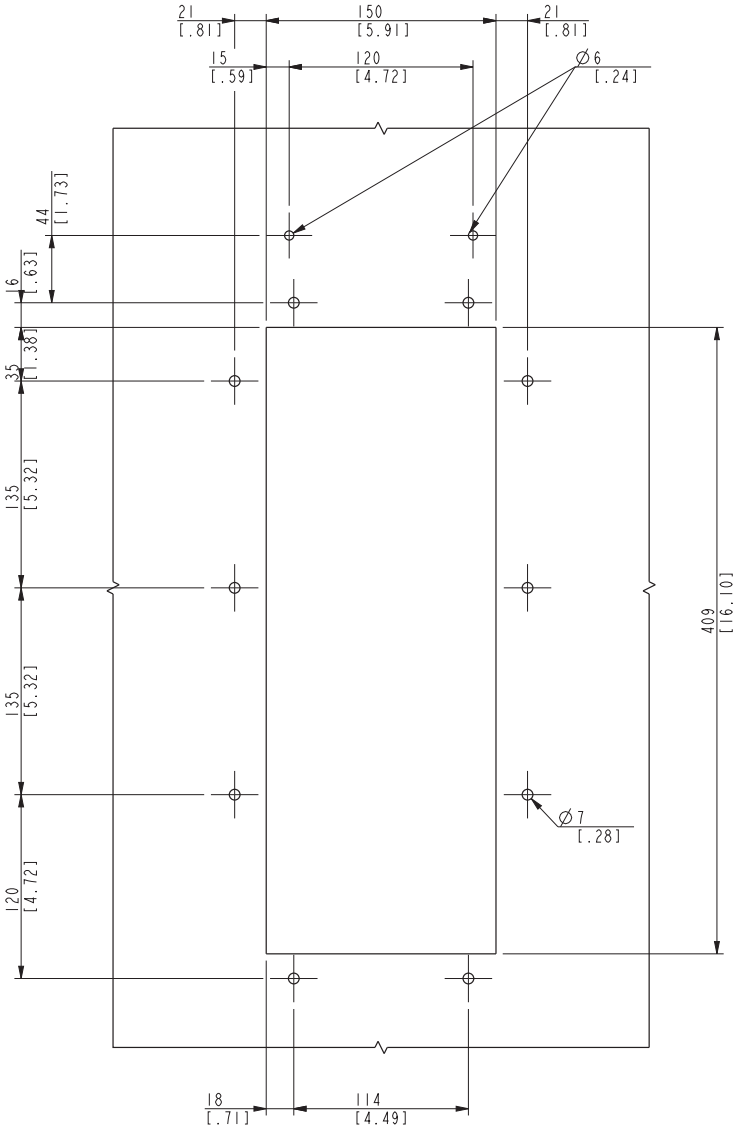

3AXD50000035517

Frame R1 (options +B063 and +B066)

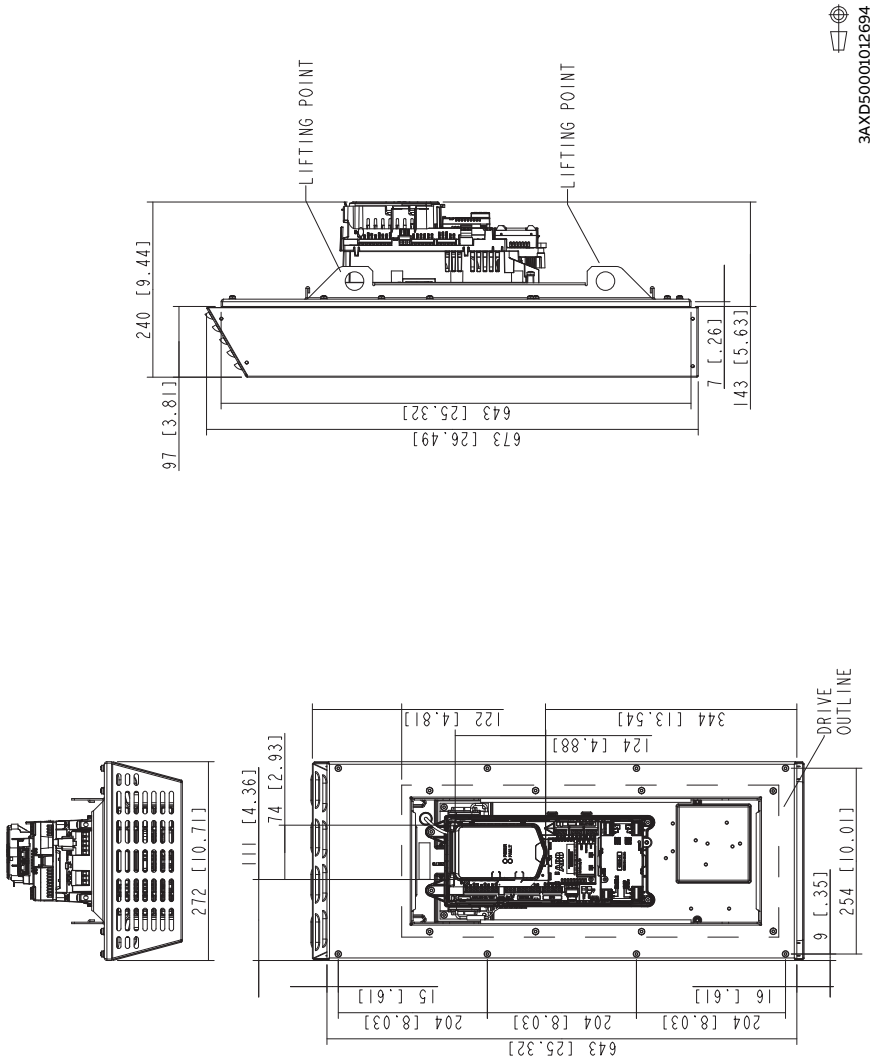

Attaching points and hole dimensions

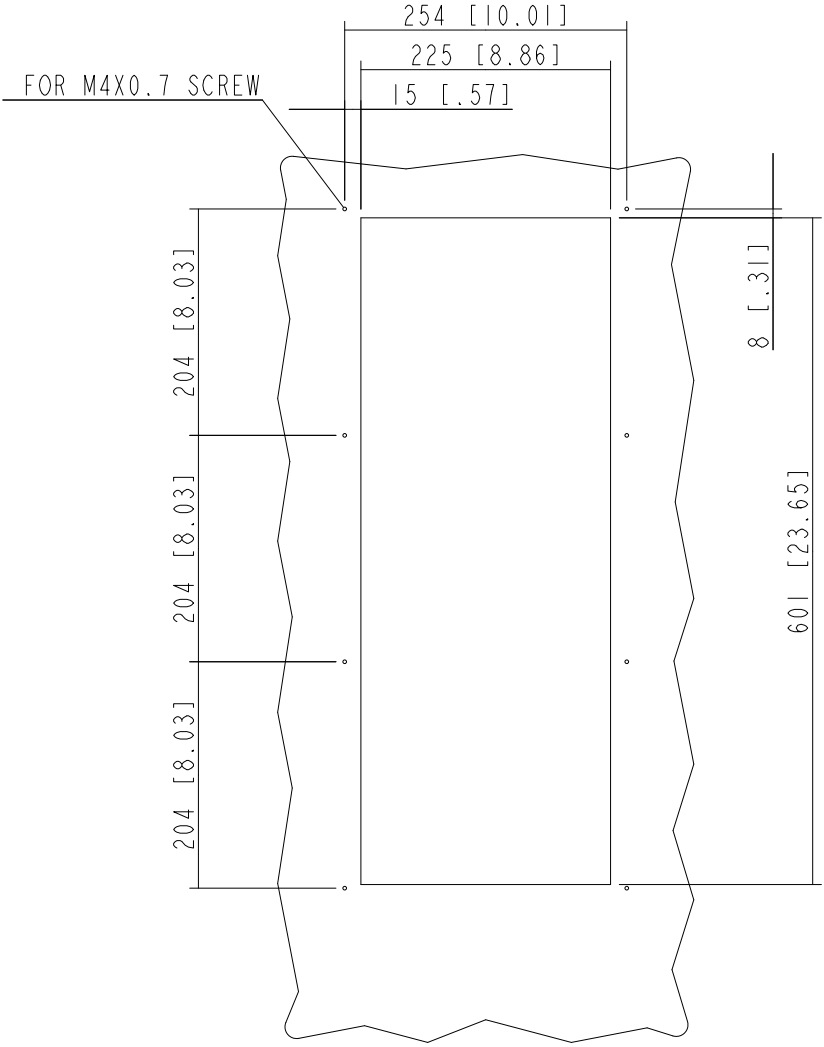

3AXD50001012694

Frame R2

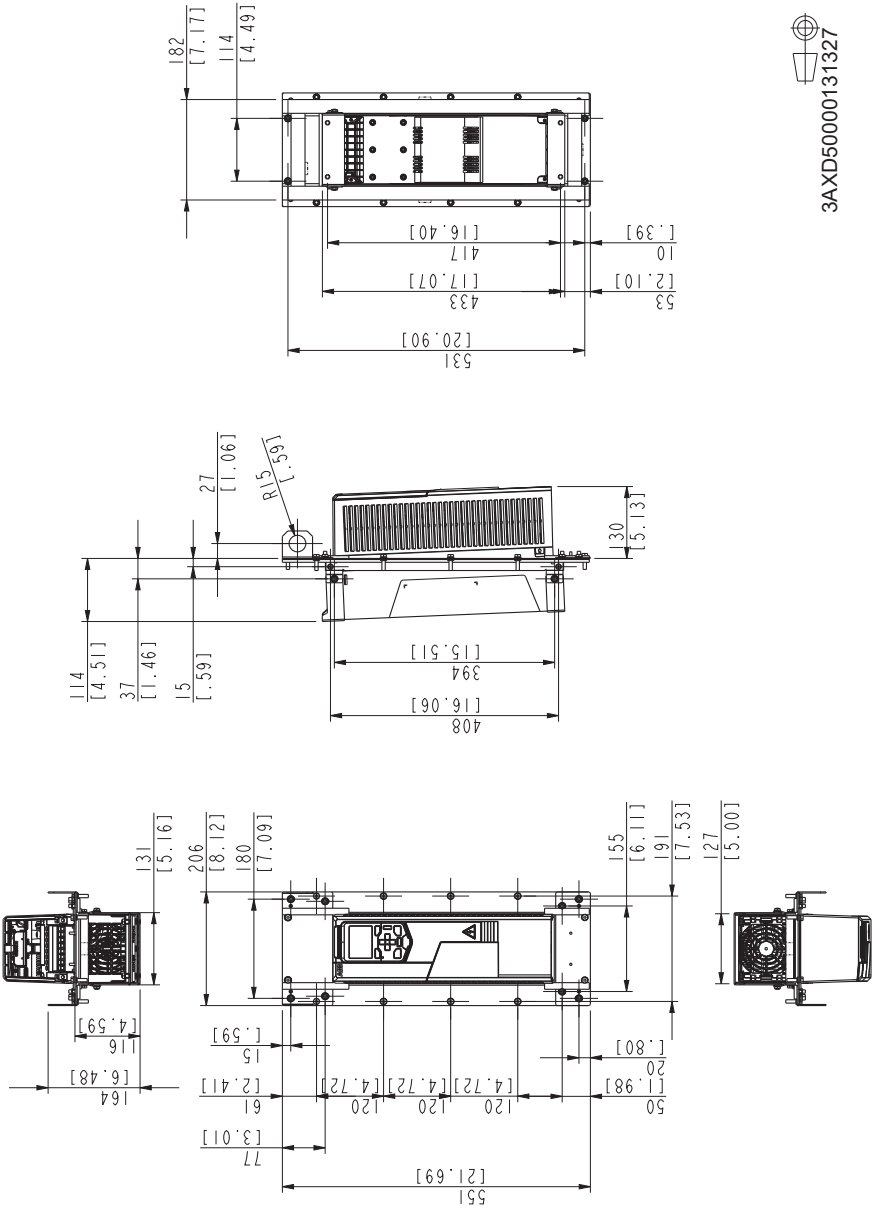
3AXD50000131327
182
[7.17]
114
[4.49]
531
[20.90]
433
[17.07]
417
[16.40]
53
[2.10]
10
[.39]
114
[4.51]
37
[1.46]
15
[.59]
R15
[.59]
27
[1.06]
408
[16.06]
394
[15.51]
130
[5.13]
164
[6.48]
116
[4.59]
131
[5.16]
206
[8.12]
180
[7.09]
155
[6.11]
191
[7.53]
127
[5.00]
551
[21.69]
77
[3.01]
61
[2.41]
120
[4.72]
120
[4.72]
120
[4.72]
50
[1.98]
20
[.80]
15
[.59]

Hood is needed for UL Type 12 installation only.

3AXD50000131242

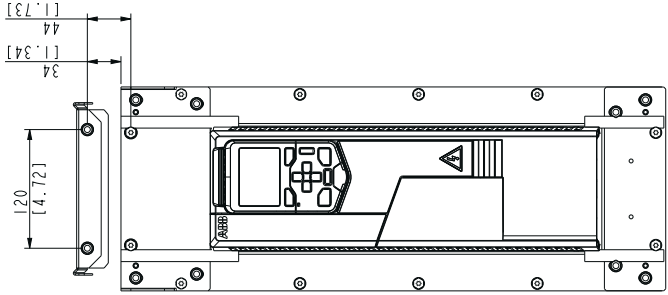

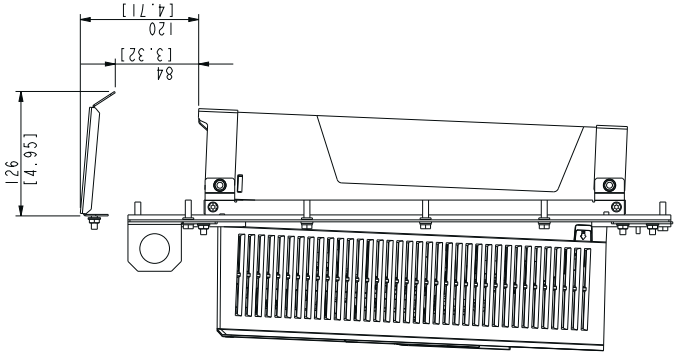

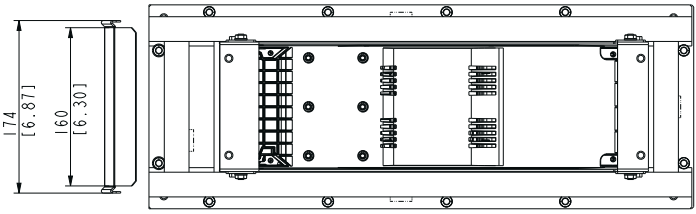

Attaching points and hole dimensions

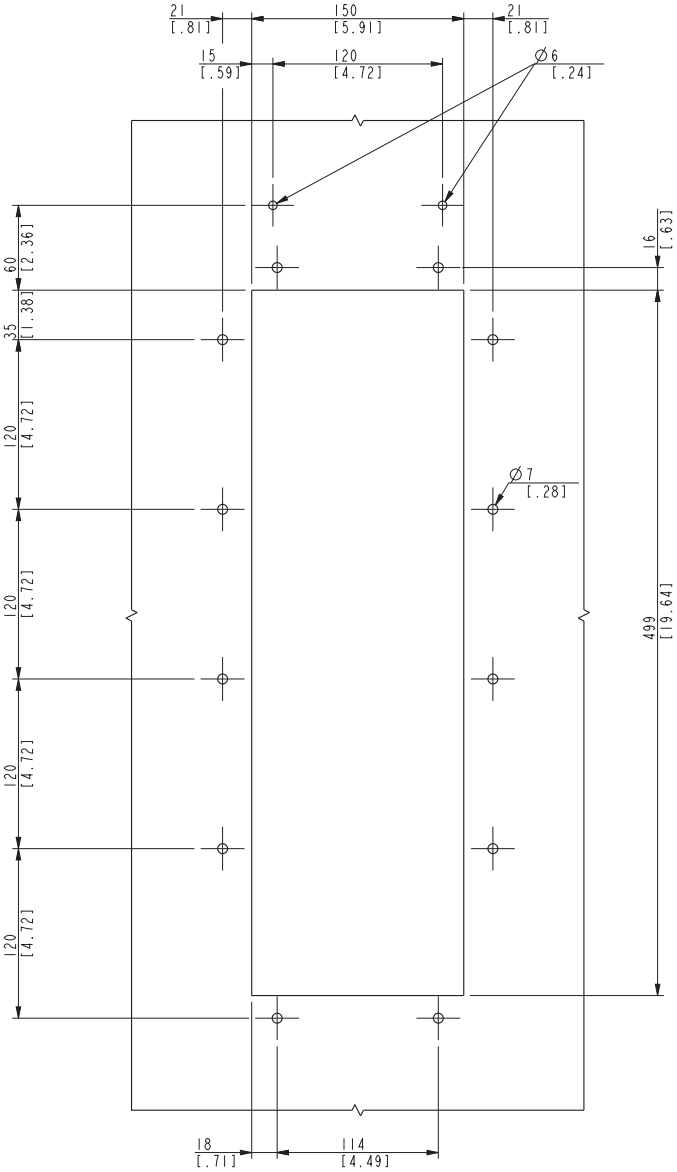

3AXD50000035597

Frame R2 (options +B063 and +B066)

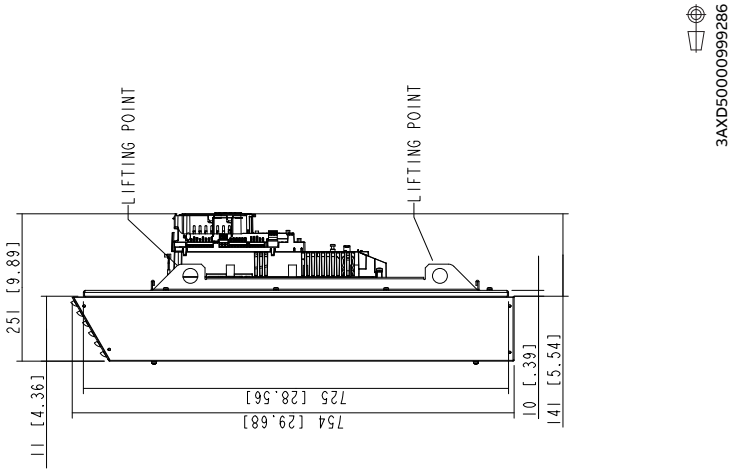

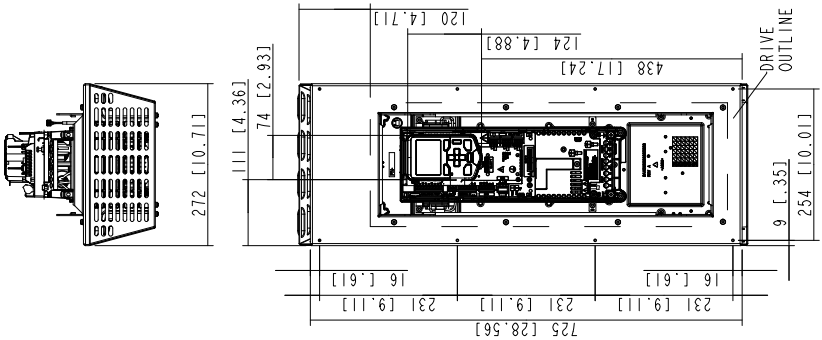

Attaching points and hole dimensions

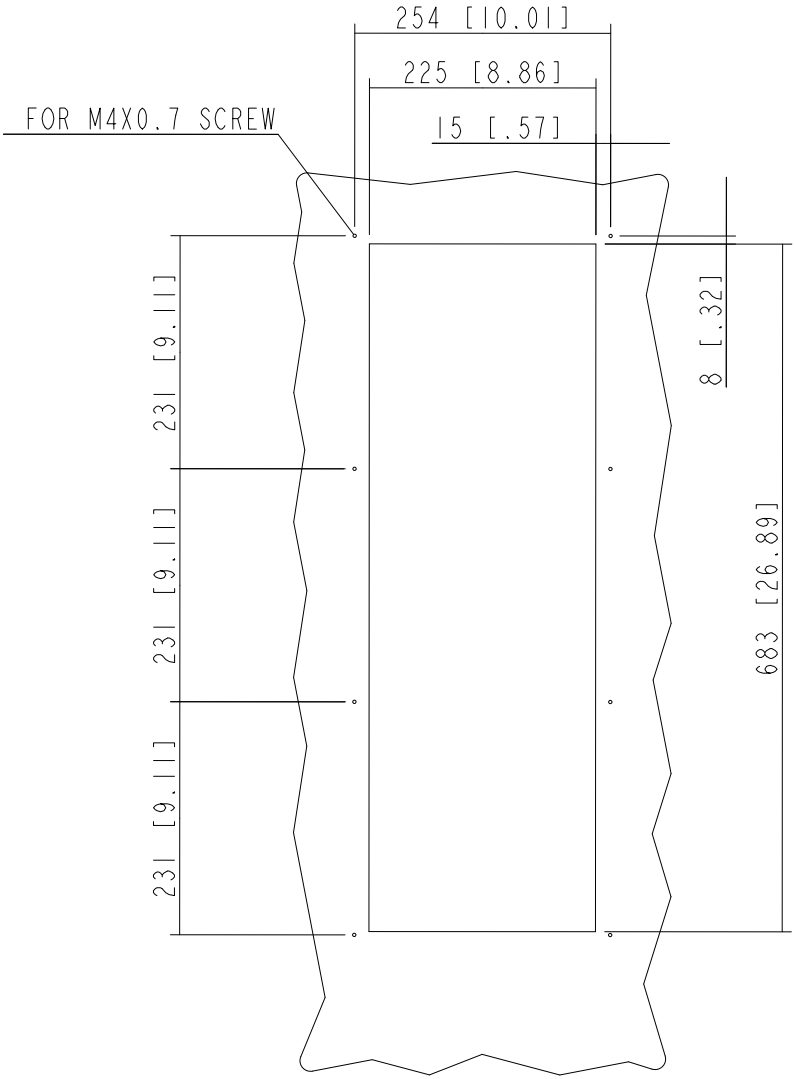

3AXD50000999286

Frame R3

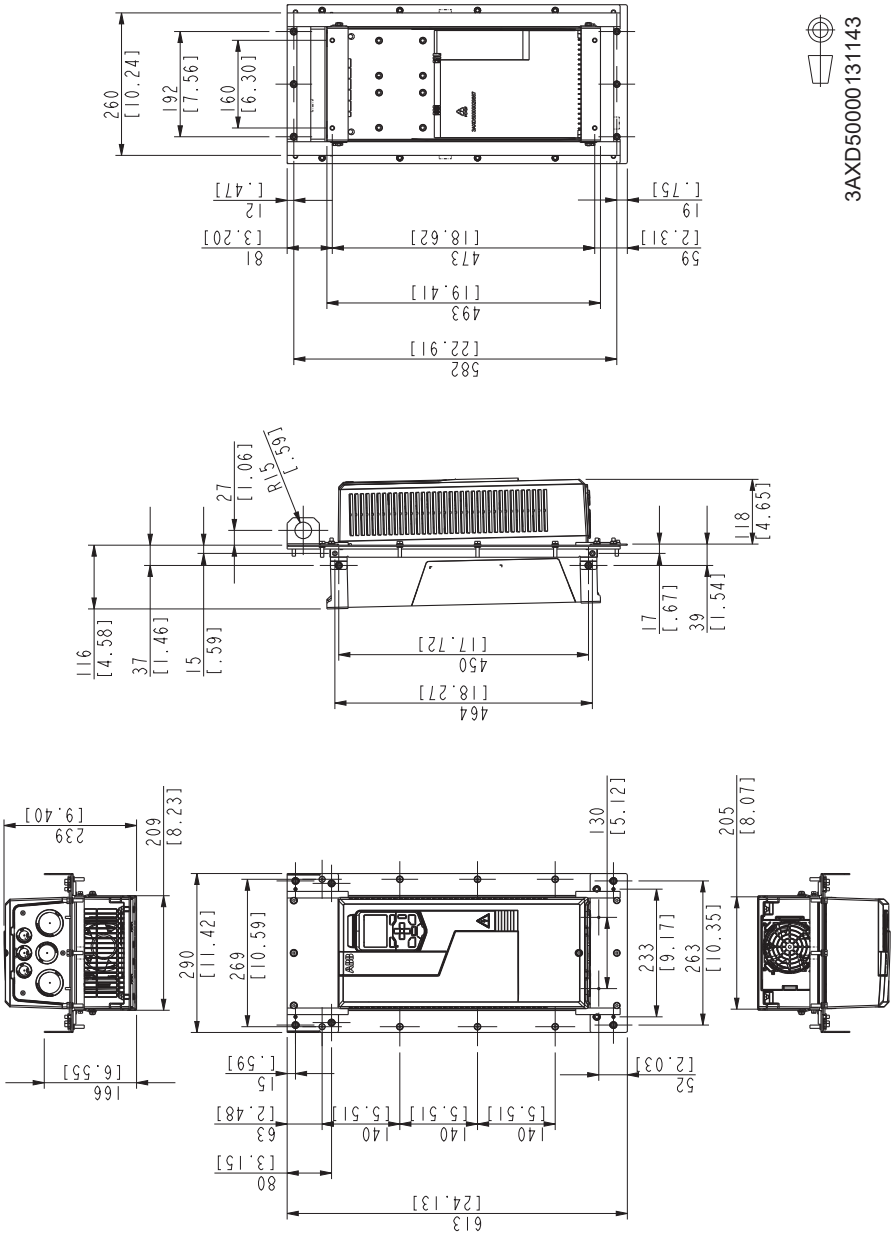
3AXD50000131143
260 [10.24]
192 [7.56]
160 [6.30]
12 [.47]
19 [.75]
81 [3.20]
473 [18.62]
59 [2.31]
493 [19.41]
582 [22.91]
R15 [.59]
27 [1.06]
118 [4.65]
116 [4.58]
37 [1.46]
15 [.59]
17 [.67]
39 [1.54]
450 [17.72]
464 [18.27]
239 [9.40]
209 [8.23]
130 [5.12]
205 [8.07]
290 [11.42]
269 [10.59]
233 [9.17]
263 [10.35]
166 [6.55]
15 [.59]
52 [2.03]
63 [2.48]
140 [5.51]
140 [5.51]
140 [5.51]
80 [3.15]
613 [24.13]

Hood is needed for UL Type 12 installation only.

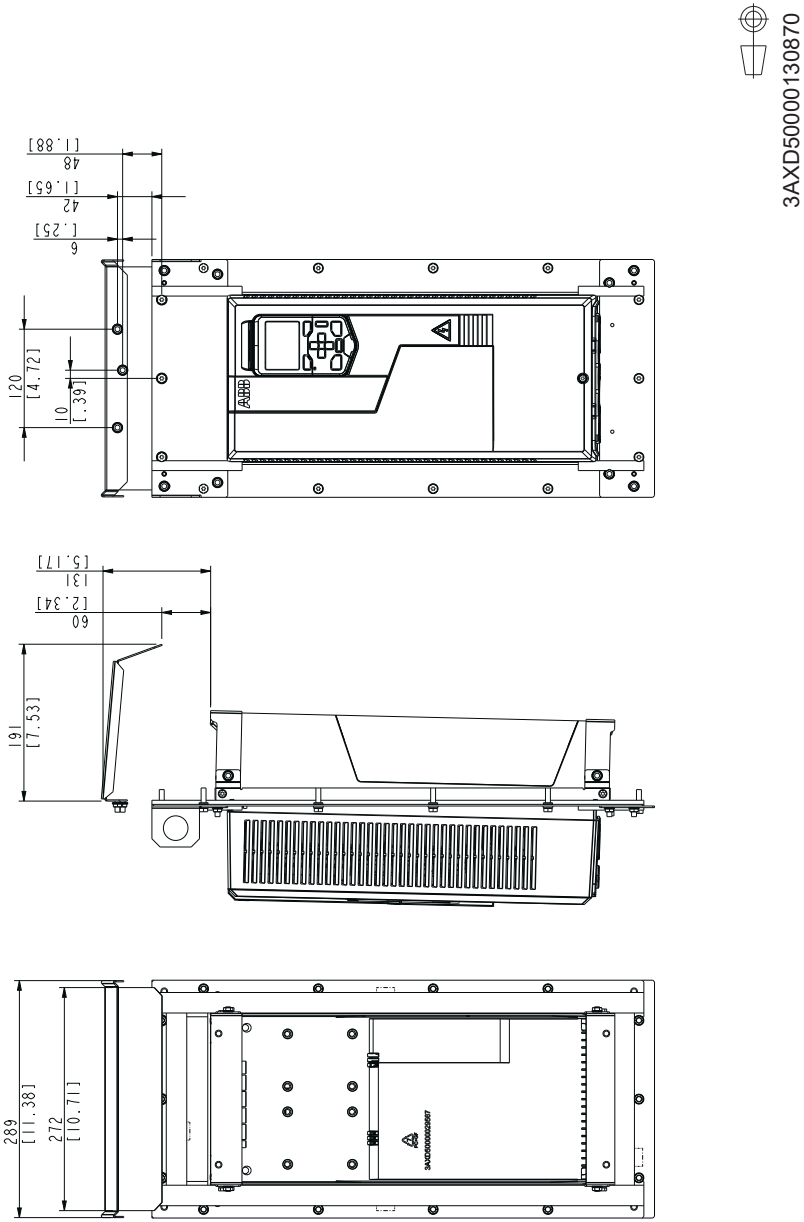

Attaching points and hole dimensions

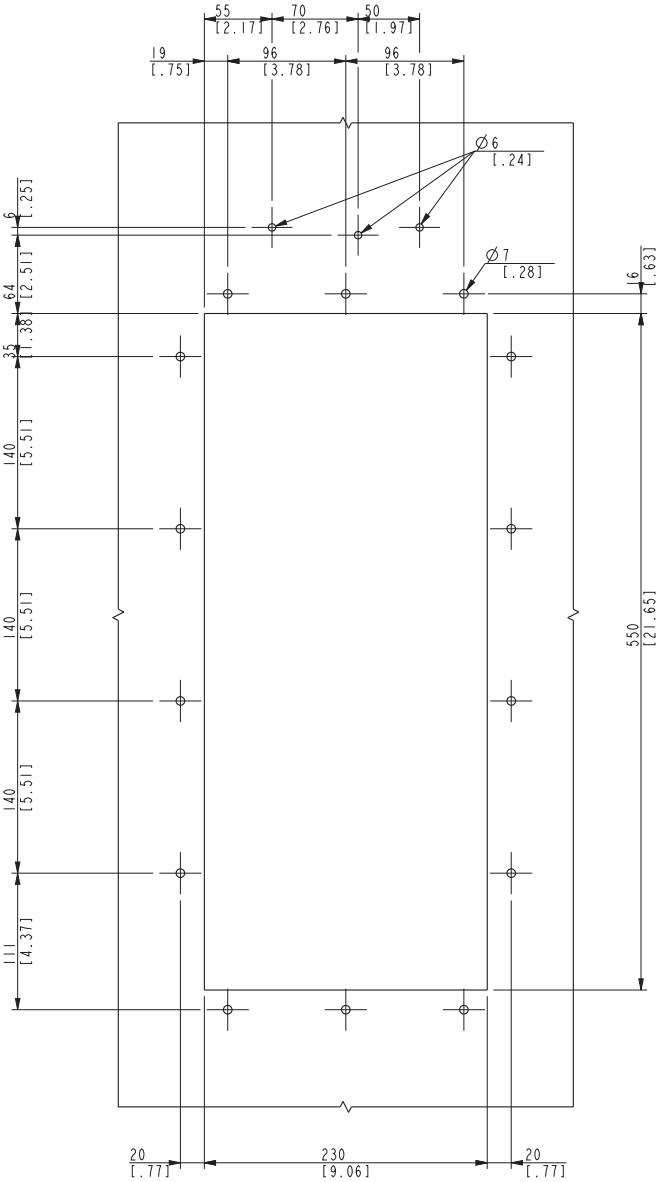

3AXD50000036519

Frame R3 (options +B063 and +B066)

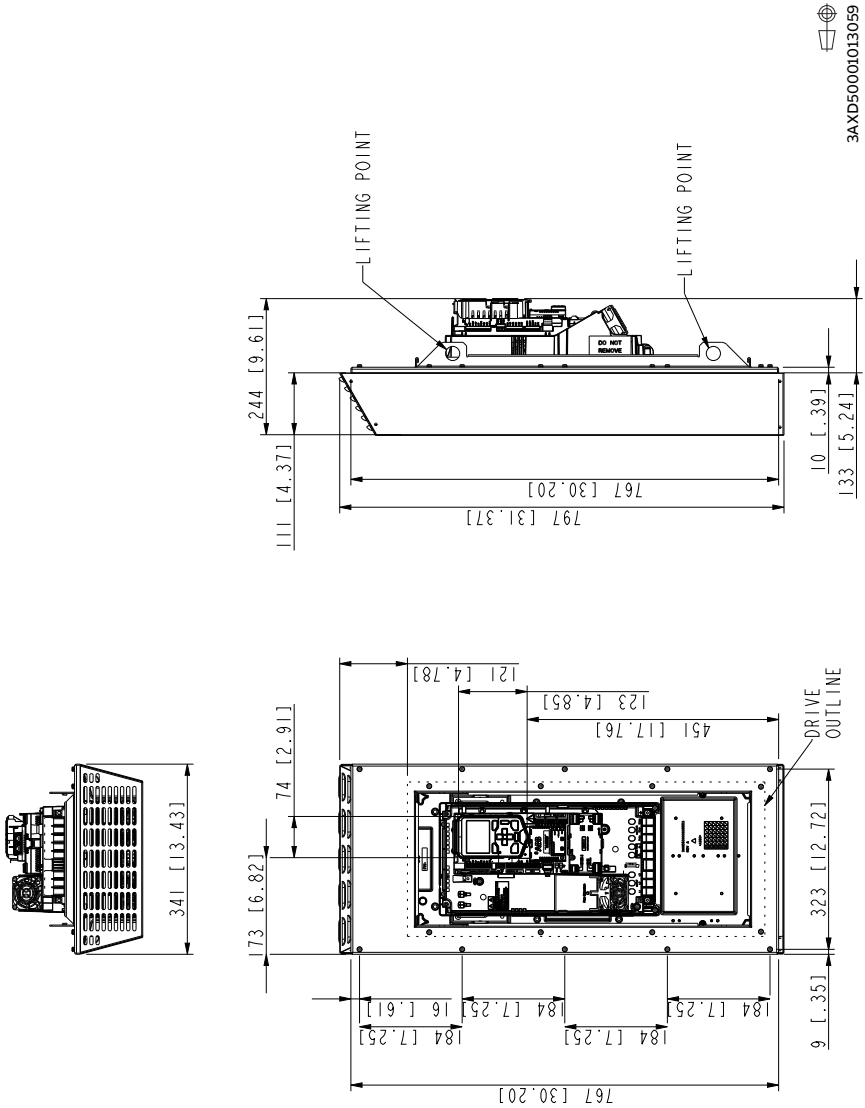

Attaching points and hole dimensions

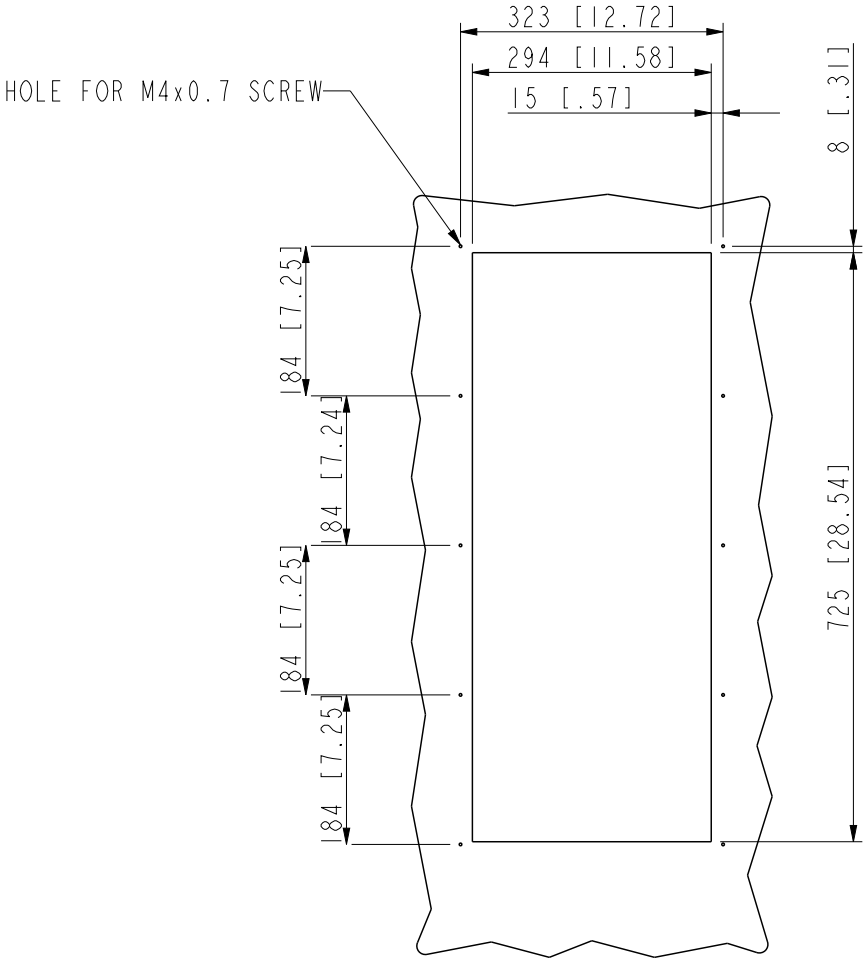

3AXD50001013059

Frame R4

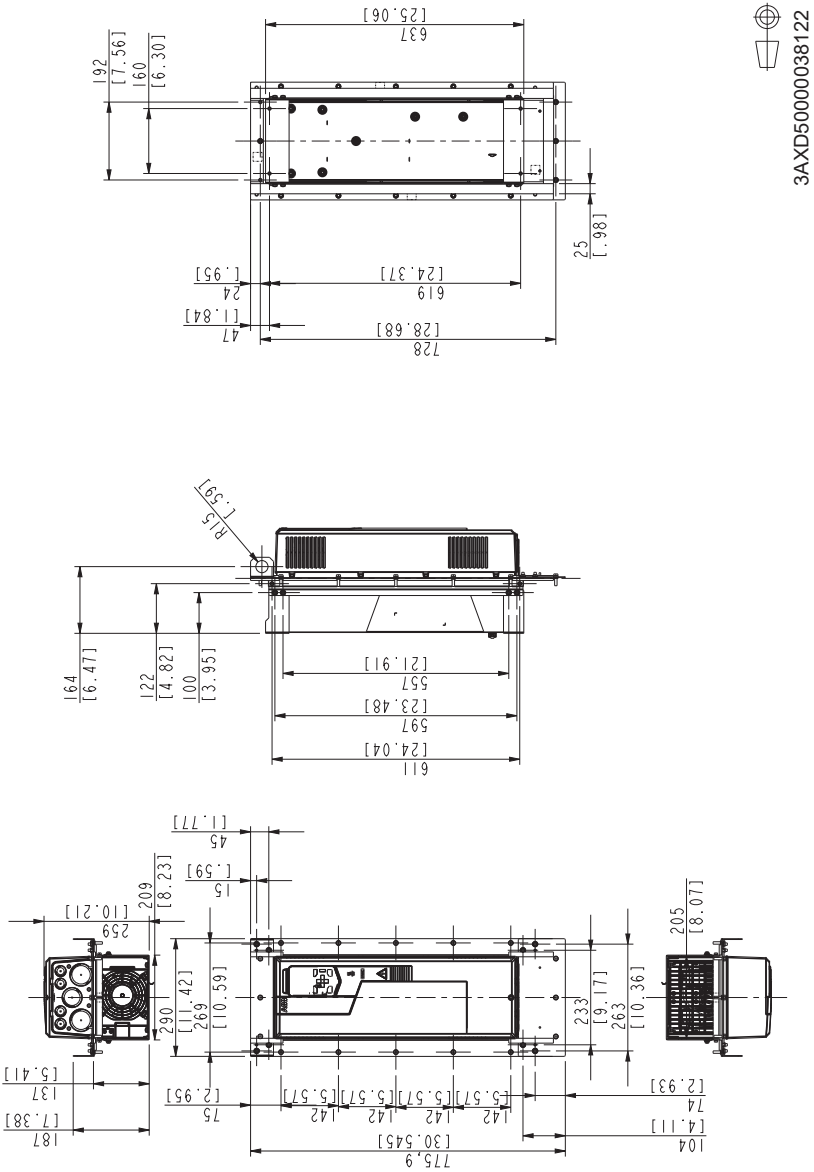
3AXD50000038122
637
[25.06]
192
[7.56]
160
[6.30]
25
[.98]
619
[24.37]
24
[.95]
47
[1.84]
728
[28.68]
R15
[.59]
164
[6.47]
122
[4.82]
100
[3.95]
557
[21.91]
597
[23.48]
611
[24.04]
45
[1.77]
15
[.59]
209
[8.23]
259
[10.21]
290
[11.42]
269
[10.59]
233
[9.17]
263
[10.36]
205
[8.07]
137
[5.41]
187
[7.38]
75
[2.95]
142
[5.57]
74
[2.93]
104
[4.11]
775,9
[30.545]

Hood is needed for UL Type 12 installation only.

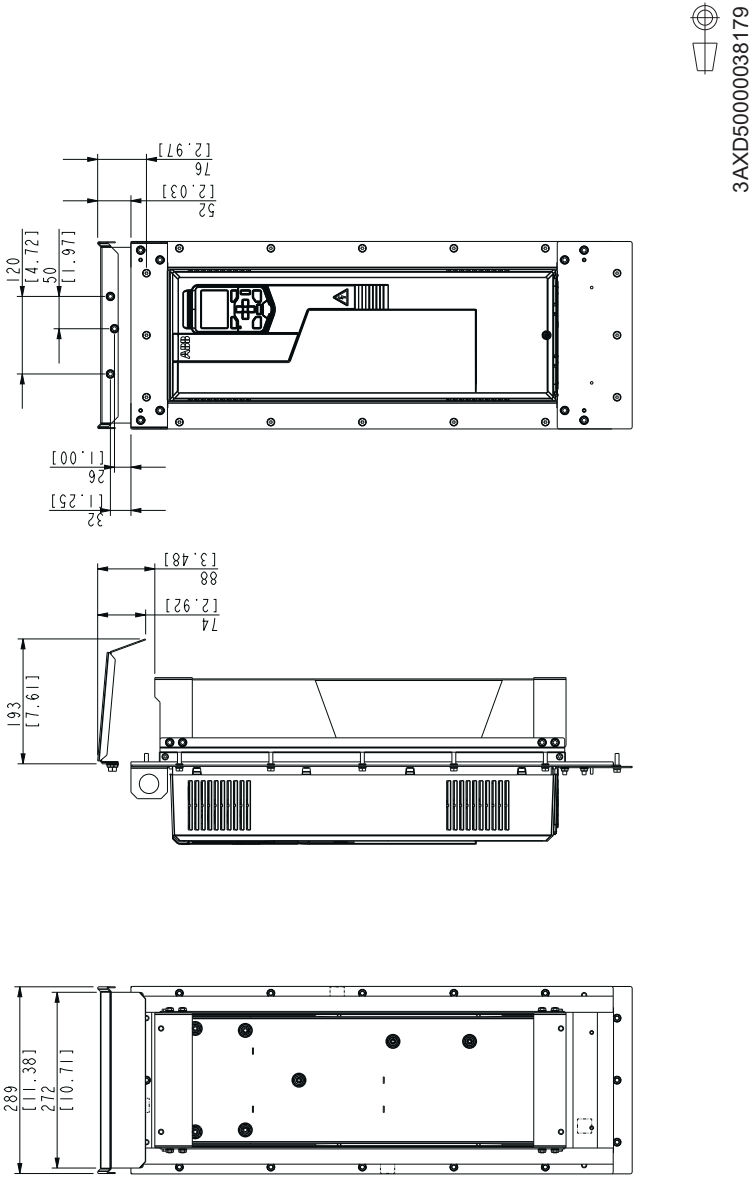

Attaching points and hole dimensions

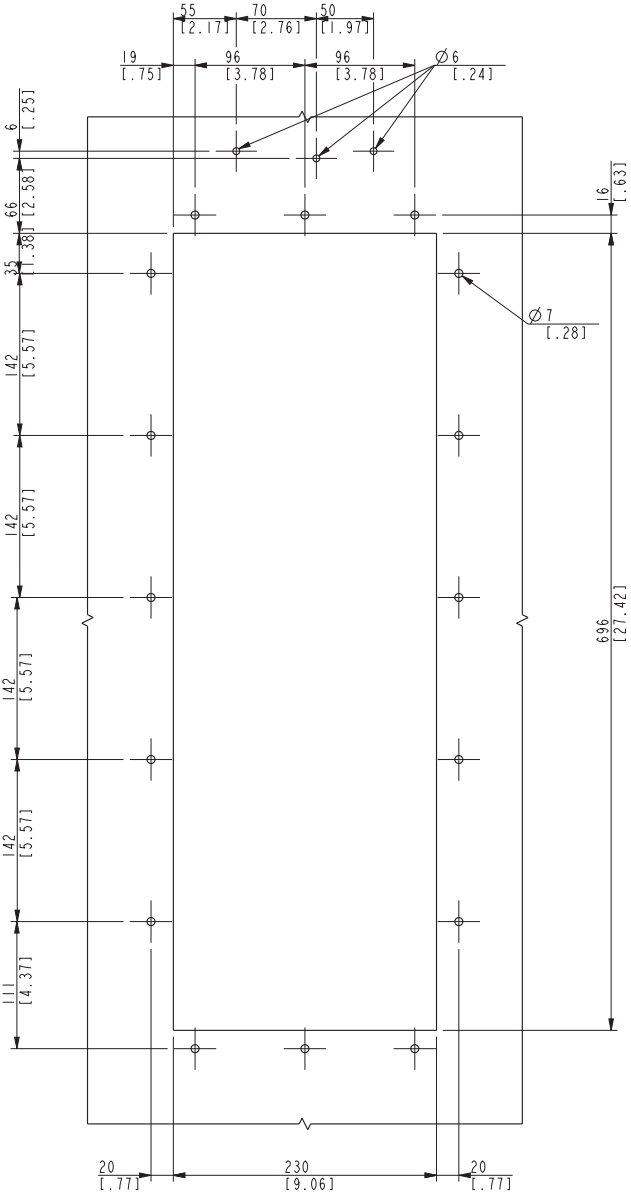

3AXD50000036765

Frame R5

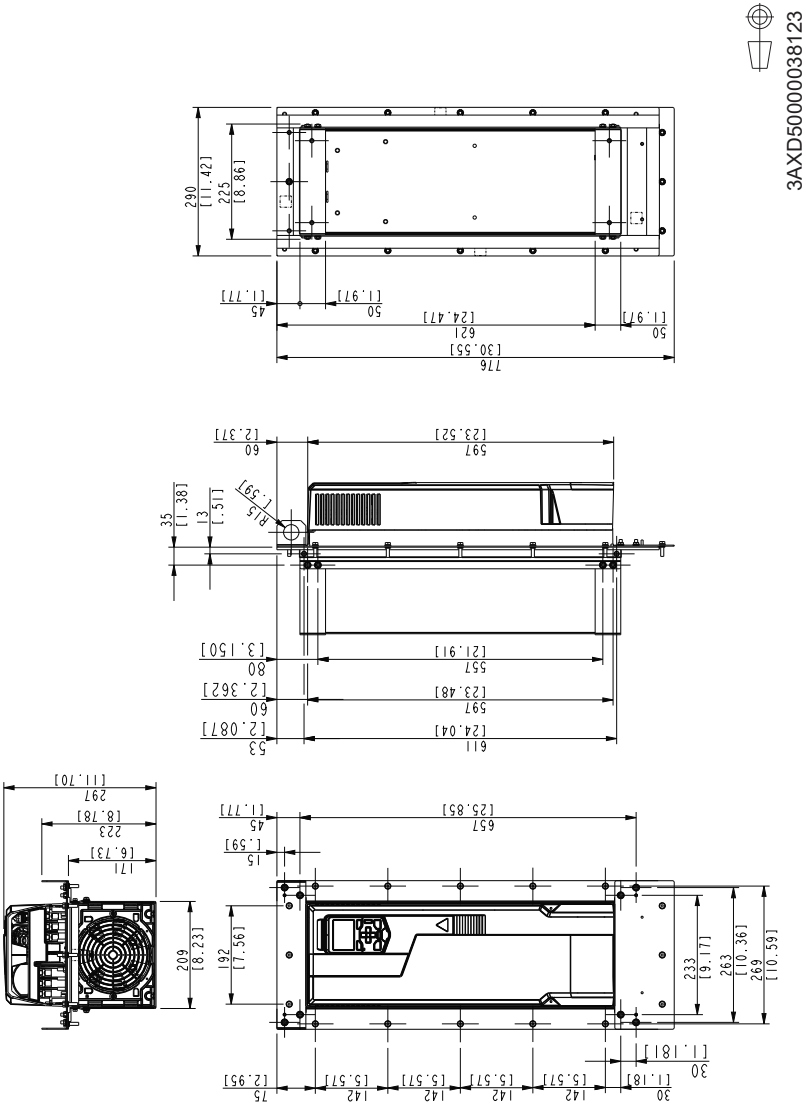
3AXD50000038123
290
[11.42]
225
[8.86]
45
[1.77]
50
[1.97]
621
[24.47]
776
[30.55]
50
[1.97]
60
[2.37]
597
[23.52]
35
[1.38]
13
[.51]
R15
[.59]
53
[2.087]
611
[24.04]
60
[2.362]
597
[23.48]
80
[3.150]
557
[21.91]
171
[6.73]
15
[.59]
223
[8.78]
657
[25.85]
45
[1.77]
297
[11.70]
209
[8.23]
192
[7.56]
233
[9.17]
263
[10.36]
269
[10.59]
30
[1.18]
142
[5.57]
142
[5.57]
142
[5.57]
30
[1.18]
75
[2.95]

Hood is needed for UL Type 12 installation only.

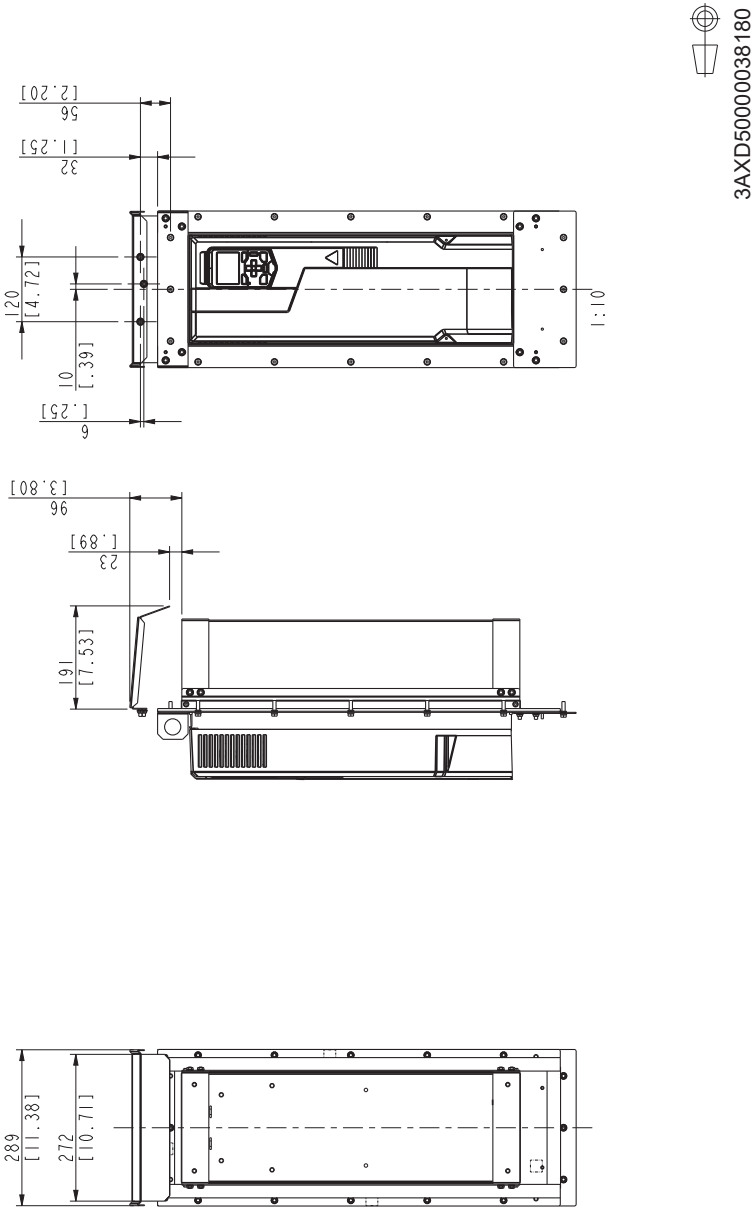

Attaching points and hole dimensions

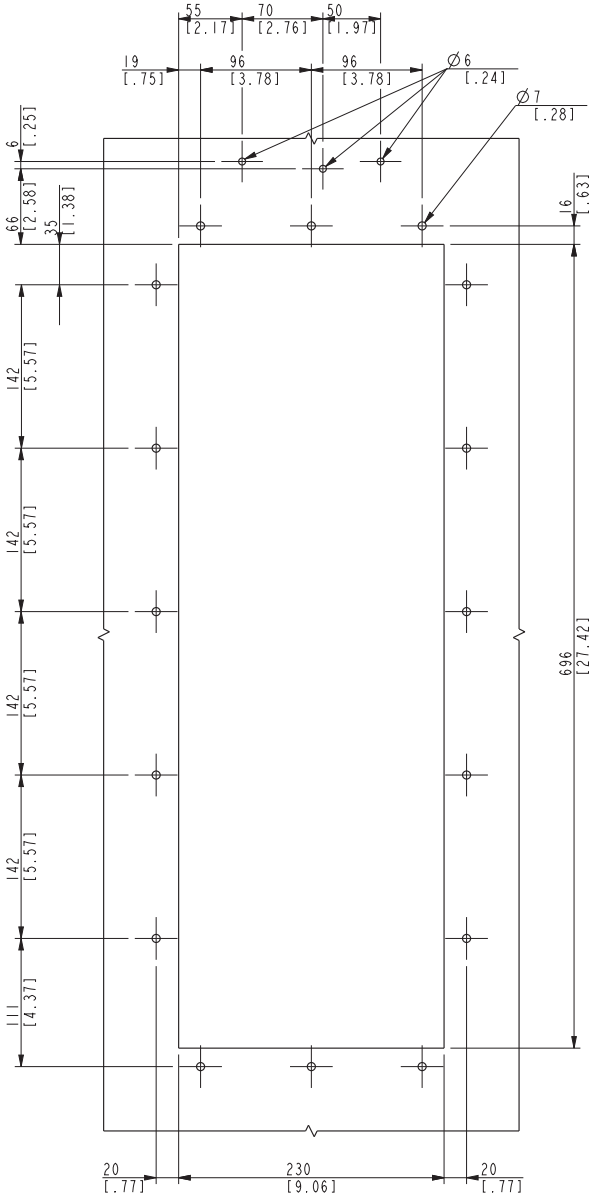

3AXD50000430598

Frame R6

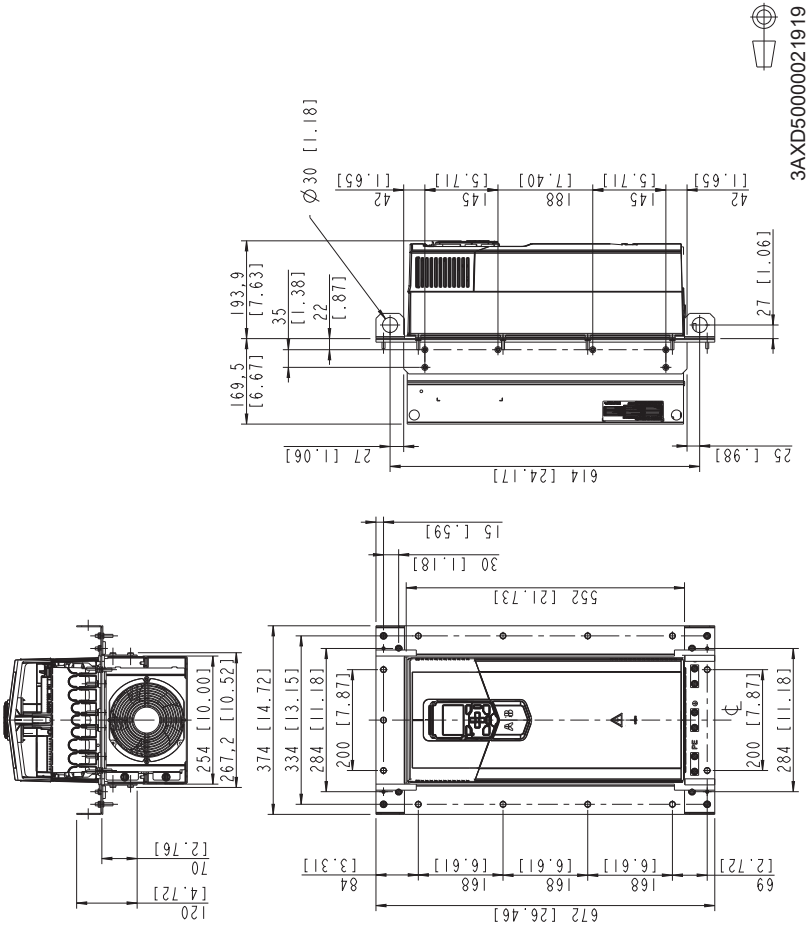
3AXD50000021919
Ø30 [1.18]
42 [1.65]
145 [5.71]
188 [7.40]
145 [5.71]
42 [1.65]
193.9 [7.63]
35 [1.38]
22 [.87]
169.5 [6.67]
27 [1.06]
27 [1.06]
25 [.98]
614 [24.17]
15 [.59]
30 [1.18]
552 [21.73]
374 [14.72]
334 [13.15]
284 [11.18]
200 [7.87]
200 [7.87]
284 [11.18]
254 [10.00]
267.2 [10.52]
84 [3.31]
168 [6.61]
168 [6.61]
168 [6.61]
69 [2.72]
672 [26.46]
70 [2.76]
120 [4.72]

Hood is needed for UL Type 12 installation only.

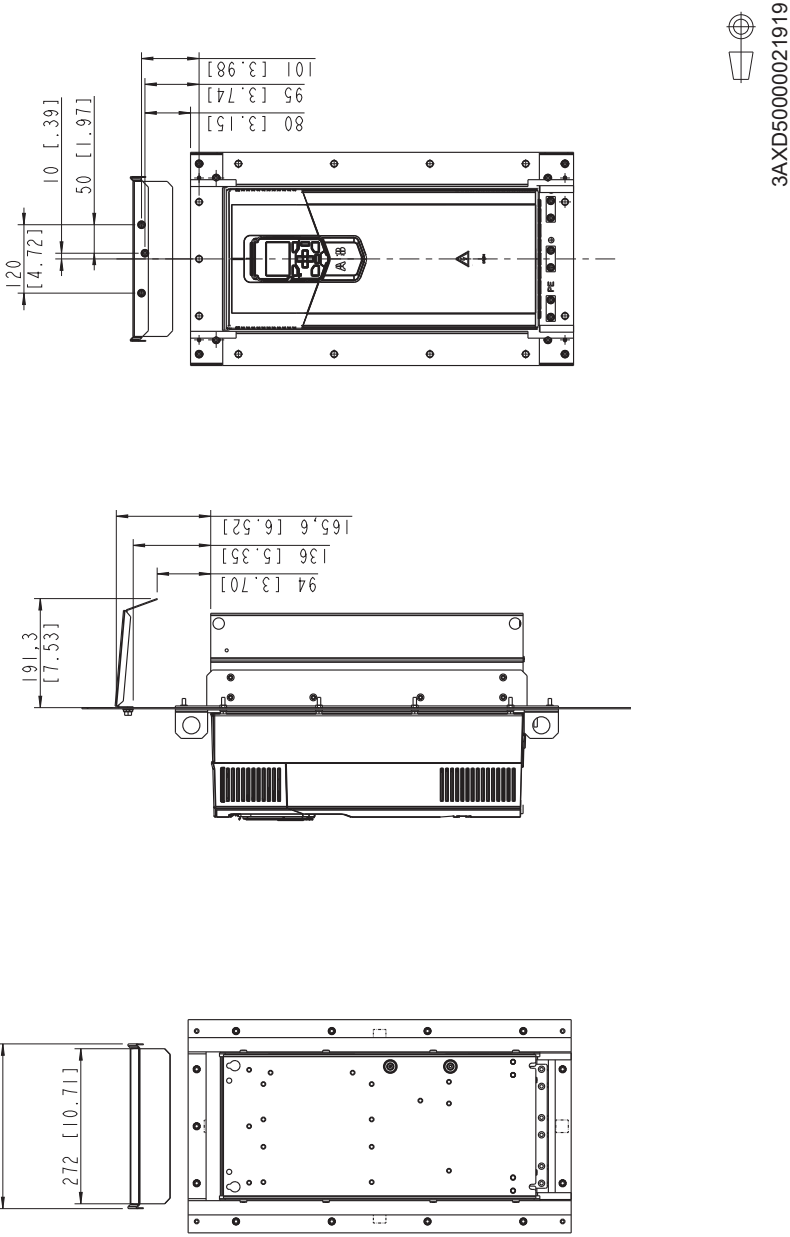

Attaching points and hole dimensions

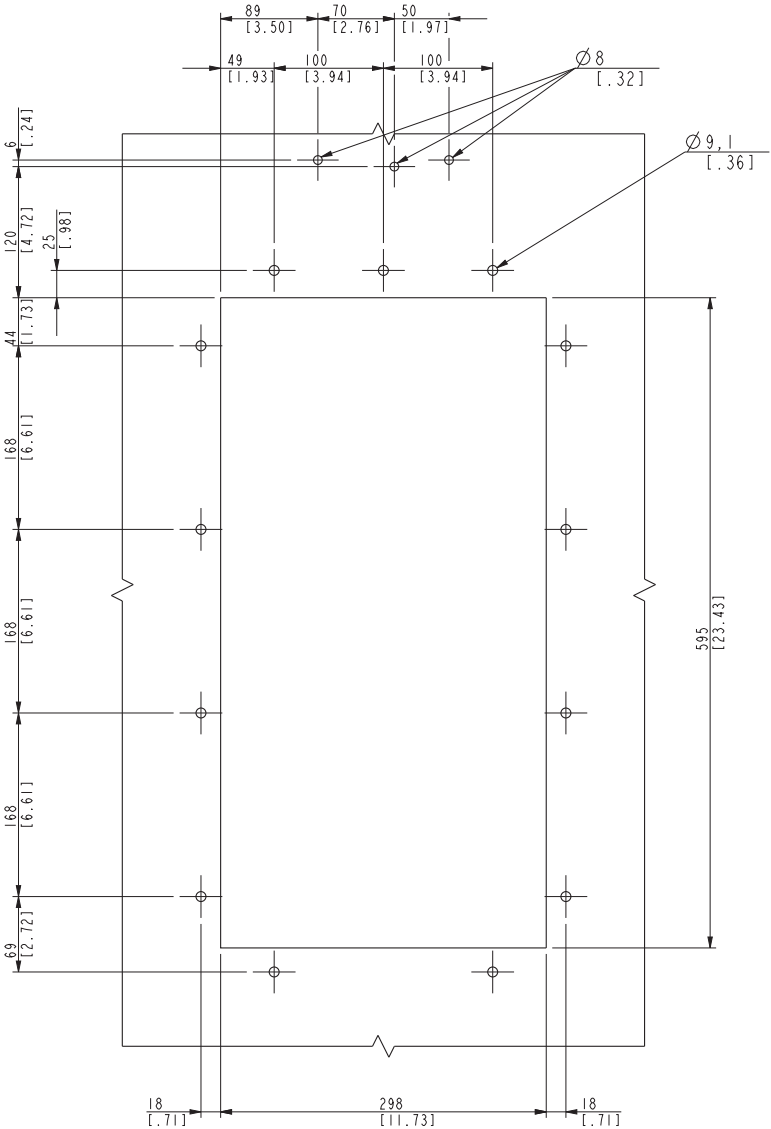

3AXD50000019323

Frame R7

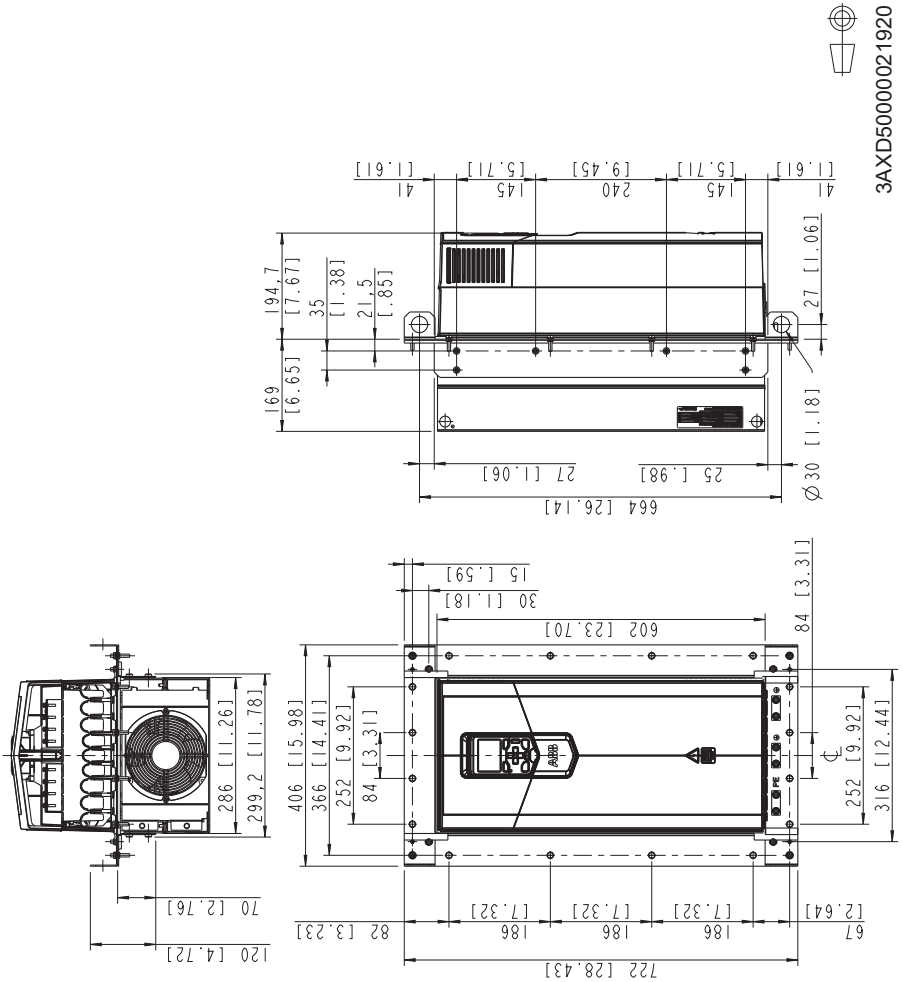
3AXD50000021920
41 [1.61]
145 [5.71]
240 [9.45]
145 [5.71]
41 [1.61]
194,7 [7.67]
35 [1.38]
21,5 [.85]
169 [6.65]
27 [1.06]
30 [1.18] Ø
25 [.98]
27 [1.06]
664 [26.14]
15 [.59]
30 [1.18]
602 [23.70]
84 [3.31]
406 [15.98]
366 [14.41]
252 [9.92]
84 [3.31]
252 [9.92]
316 [12.44]
286 [11.26]
299,2 [11.78]
70 [2.76]
120 [4.72]
82 [3.23]
186 [7.32]
186 [7.32]
186 [7.32]
67 [2.64]
722 [28.43]

Hood is needed for UL Type 12 installation only.

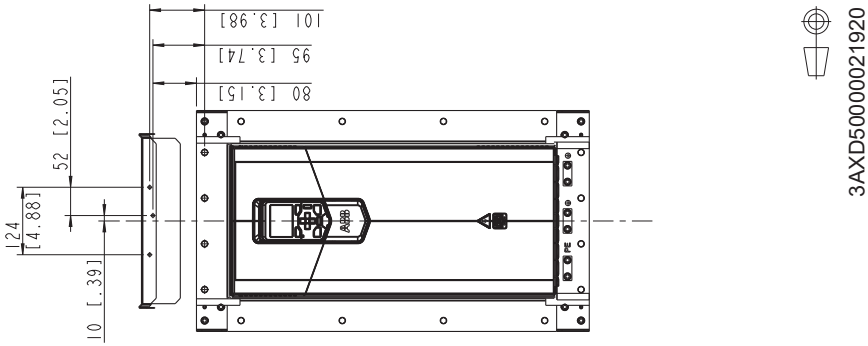

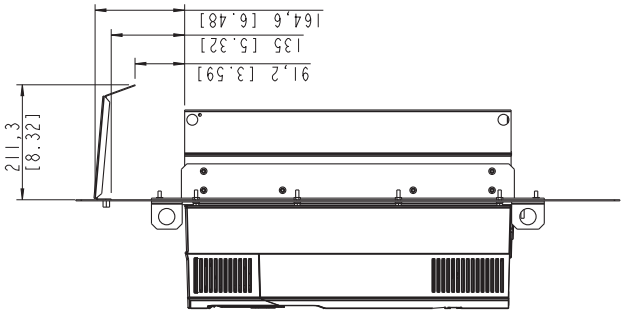

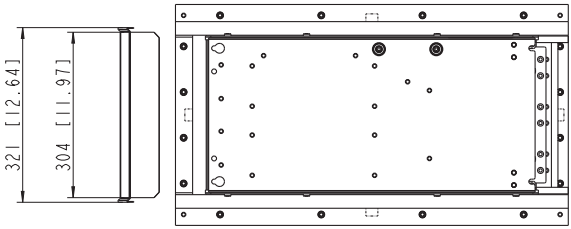

Attaching points and hole dimensions

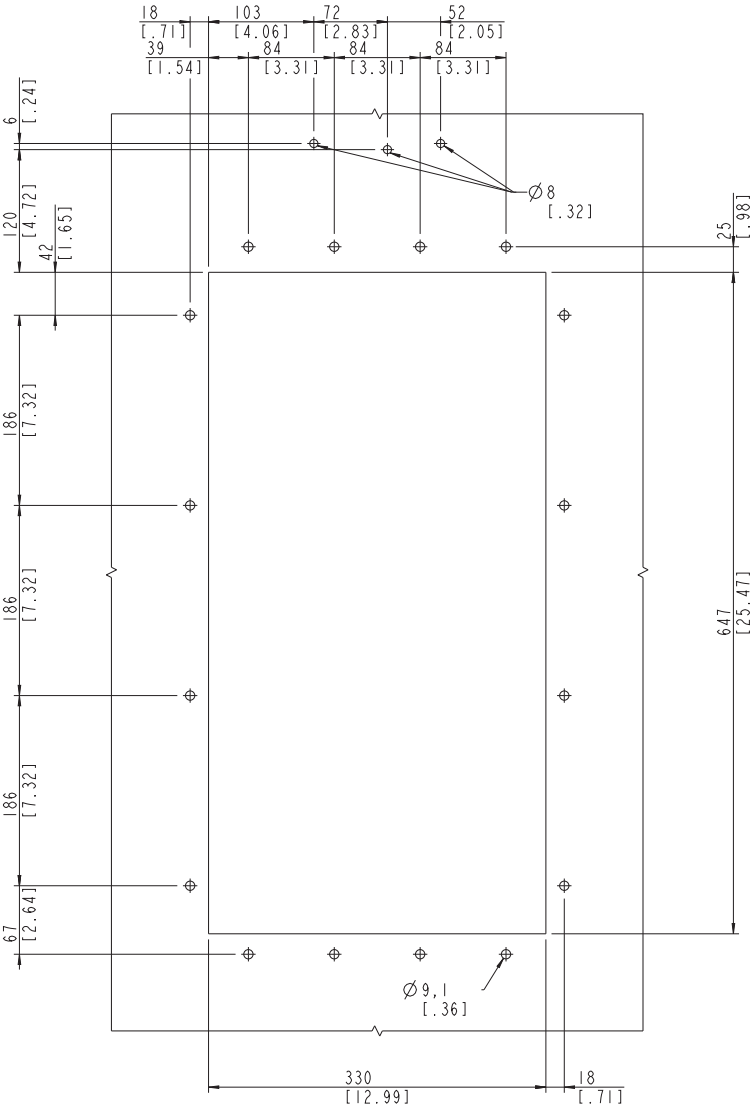

3AXD50000019324

Frame R8

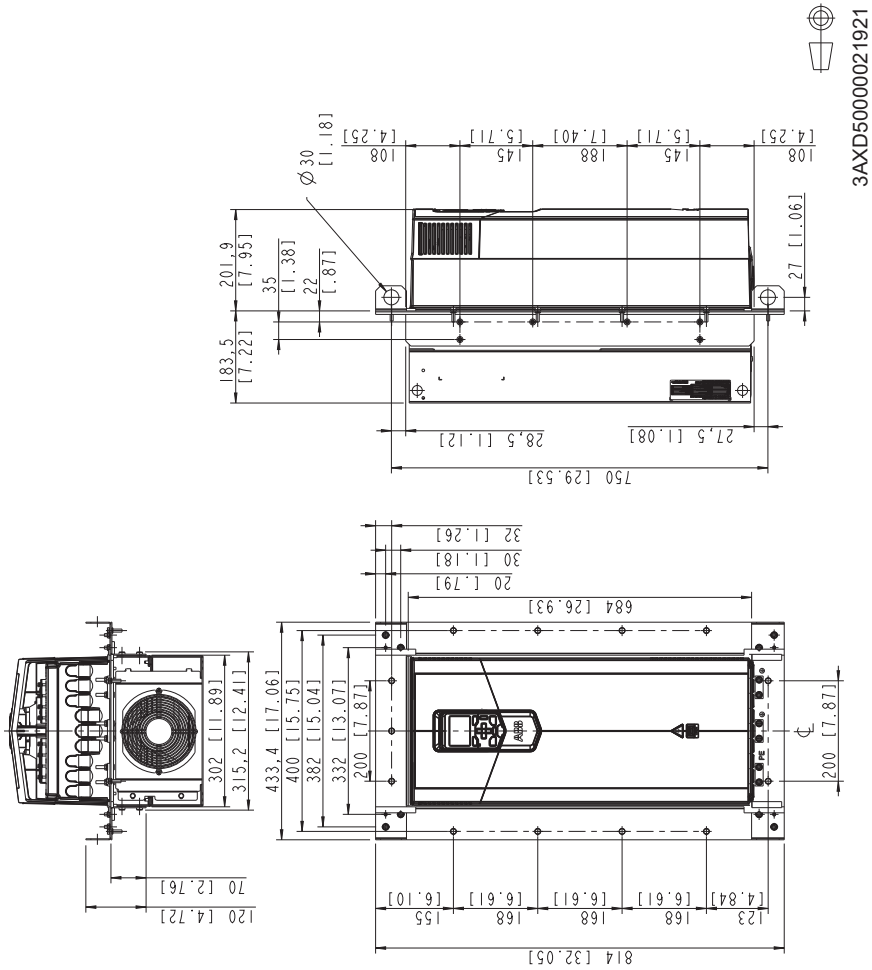
3AXD50000021921
108 [4.25]
145 [5.71]
188 [7.40]
145 [5.71]
108 [4.25]
Ø30 [1.18]
201.9 [7.95]
35 [1.38]
22 [.87]
183.5 [7.22]
27 [1.06]
28,5 [1.12]
27,5 [1.08]
750 [29.53]
32 [1.26]
30 [1.18]
20 [.79]
684 [26.93]
433.4 [17.06]
400 [15.75]
382 [15.04]
332 [13.07]
200 [7.87]
200 [7.87]
302 [11.89]
315,2 [12.41]
70 [2.76]
120 [4.72]
155 [6.10]
168 [6.61]
168 [6.61]
168 [6.61]
123 [4.84]
814 [32.05]

Hood is needed for UL Type 12 installation only.

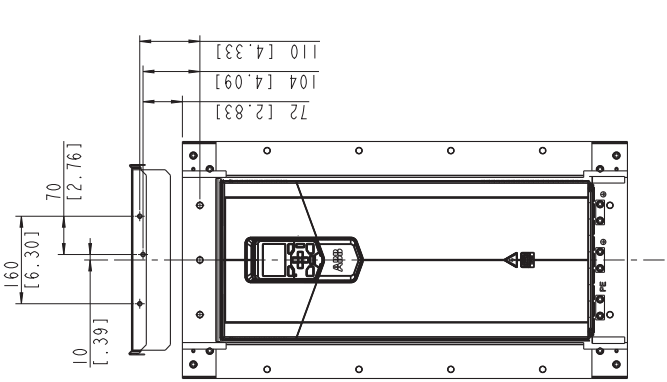

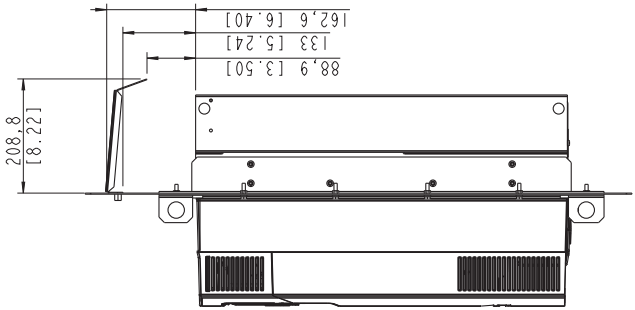

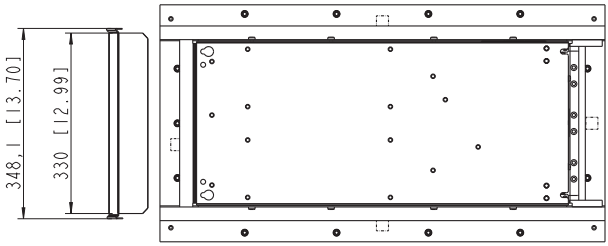

3AXD50000021921

Attaching points and hole dimensions

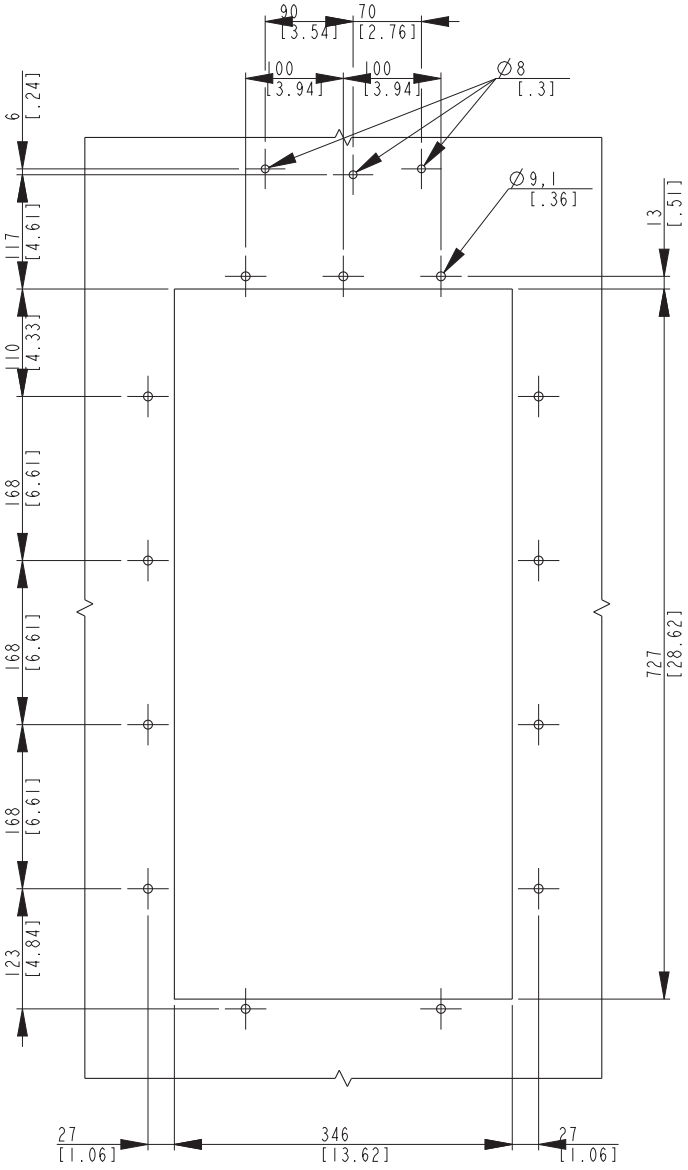

3AXD50000019325

Frame R9

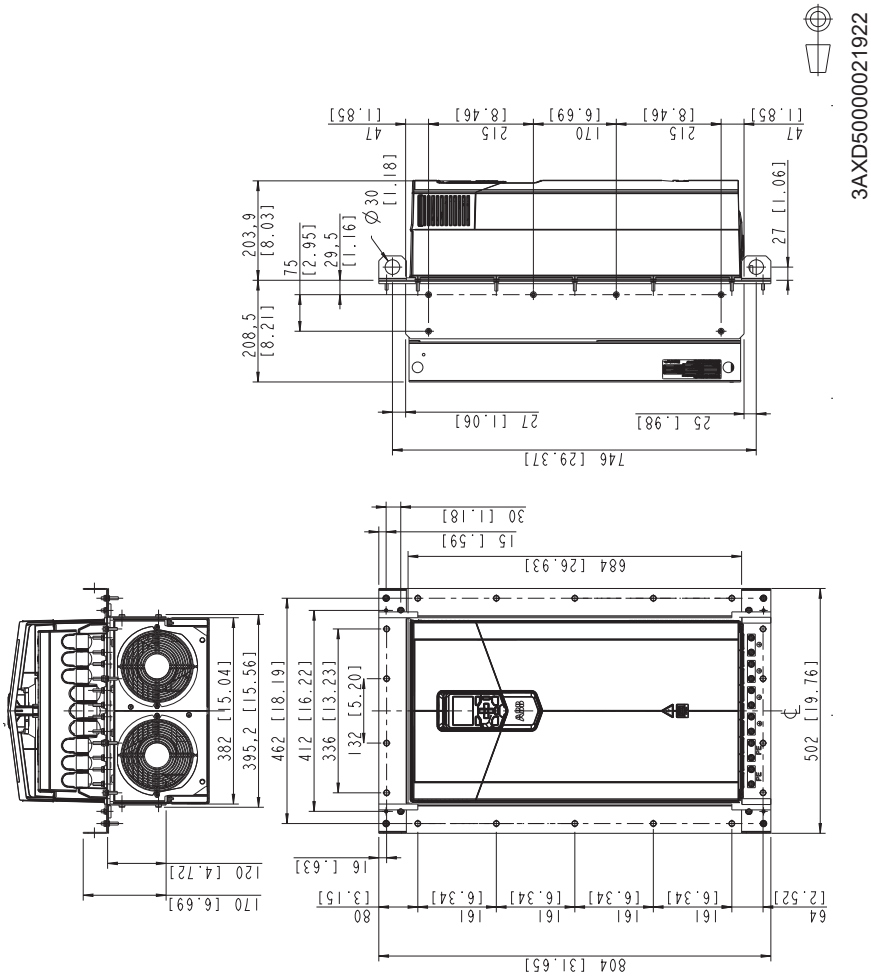
3AXD50000021922
47 [1.85]
215 [8.46]
170 [6.69]
215 [8.46]
47 [1.85]
27 [1.06]
Ø30 [1.18]
203.9 [8.03]
75 [2.95]
29.5 [1.16]
208.5 [8.21]
27 [1.06]
25 [.98]
746 [29.37]
30 [1.18]
15 [.59]
684 [26.93]
382 [15.04]
395,2 [15.56]
462 [18.19]
412 [16.22]
336 [13.23]
132 [5.20]
502 [19.76]
16 [.63]
120 [4.72]
170 [6.69]
80 [3.15]
161 [6.34]
161 [6.34]
161 [6.34]
161 [6.34]
64 [2.52]
804 [31.65]

Hood is needed for UL Type 12 installation only.

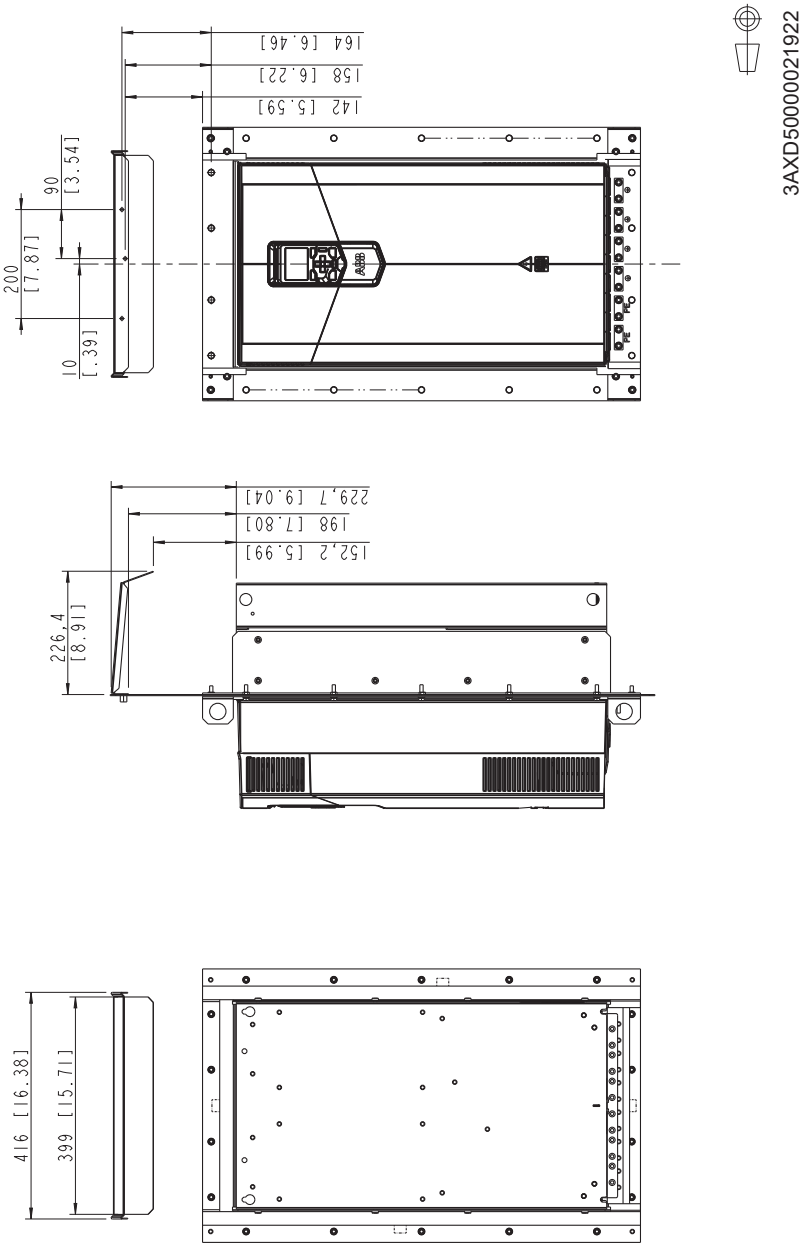

Attaching points and hole dimensions

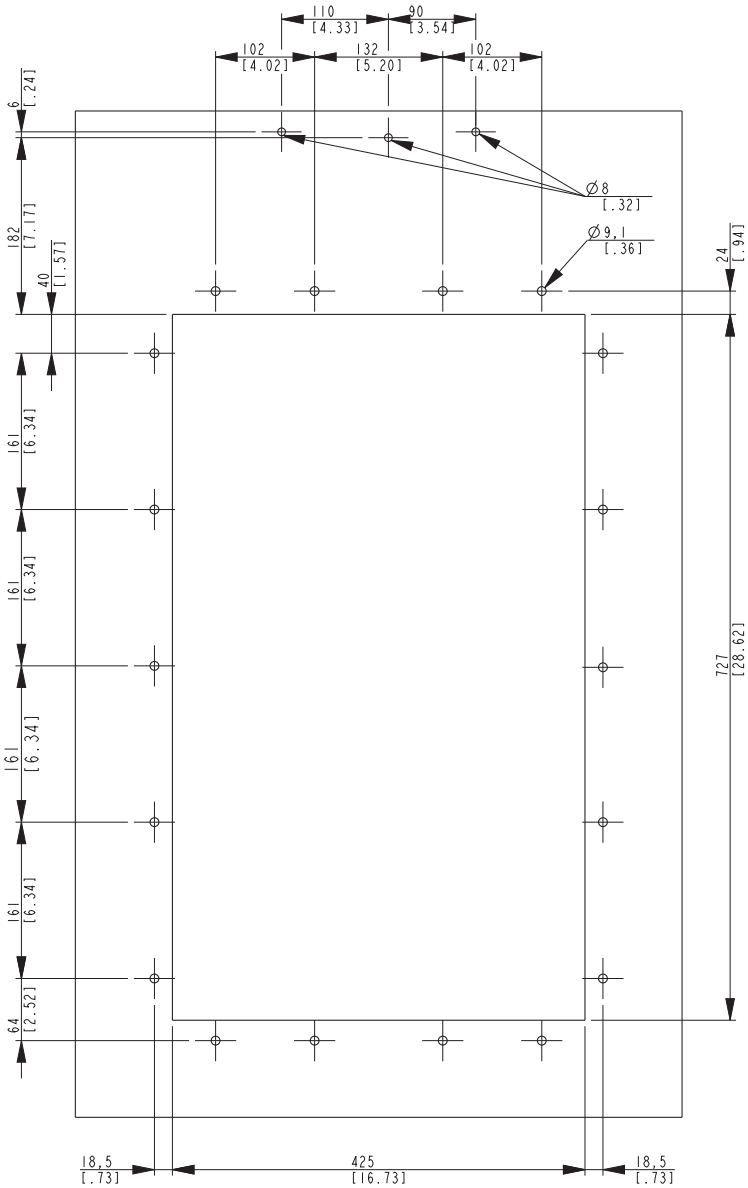

3AXD50000019326

Further information

Product and service inquiries

Address any inquiries about the product to your local ABB representative, quoting the type designation and serial number of the unit in question. A listing of ABB sales, support and service contacts can be found by navigating to www.abb.com/contact-centers.

Product training

For information on ABB product training, navigate to new.abb.com/service/training.

Providing feedback on ABB manuals

Your comments on our manuals are welcome. Navigate to new.abb.com/drives/manuals-feedback-form.

Document library on the Internet

You can find manuals and other product documents in PDF format on the Internet at www.abb.com/drives/documents.

a2 (frozen)
PDF-A5
Created 2023-12-19, 11:13:46

www.abb.com/drives

3AXD50000349821 C

© Copyright 2023 ABB. All rights reserved.
Specifications subject to change without notice.

3AXD50000349821 Rev C (EN)
2023-12-19